APPENDIX C

Transportation Technical Memos and Analyses

APPENDIX C.1
Transportation Planning Assumptions

stantec.com

Technical Memo

Stantec

To: File

From: Steve Abendschein
Stantec – New York City

File: 193410075

Date: Revised January 22, 2010

Reference: 15 Penn Project – Transportation Planning Assumptions

This memorandum summarizes the transportation planning assumptions to be used for the traffic, parking, transit and pedestrian analyses for the proposed 15 Penn Plaza Project. Estimates of the proposed project's peak hour travel demand and trip assignment patterns are provided, along with discussions of the traffic, parking, transit and pedestrian study areas for the impact analyses. Wherever possible, assumptions regarding trip generation, trip assignment, mode split and trip distribution are consistent with both the *Hudson Yards Rezoning and Development Program FGEIS* and the *Western Rail Yard DEIS*.

PROJECT PROGRAM

The proposed 15 Penn Plaza Redevelopment Project involves the redevelopment of the existing Hotel Pennsylvania, located on Seventh Avenue between West 32nd and West 33rd Streets adjacent to Penn Station in Manhattan (Block 808, Lots 1001 and 1002), to a new commercial office building and retail base.

SINGLE-TENANT OFFICE SCENARIO (SCENARIO 1)

Scenario 1 would consist of a commercial office building of approximately 2.82 million gross square feet (gsf) (2.05 million zsf) with floorplates in the podium of a sufficient size to accommodate trading operations. When complete, Scenario 1 would include approximately 1.53 million gsf of office space, including five floors within the building's podium base that would accommodate trading floor use totaling 340,857 gsf; 18,266 gsf of retail use fronting on Seventh Avenue and on West 32nd and 33rd Streets; 509,071 gsf of building amenity, lobby, service and loading area space; and approximately 418,395 gsf of mechanical space. A portion of the below grade service area could potentially include 100 below-grade accessory parking spaces.

The main entrances to the office and trading floor use would be on Seventh Avenue with secondary entrances on both West 32nd and West 33rd Streets. The first 10 floors of the proposed building, which would contain lobby, retail, office space suitable for trading floor use (on floors two through six), and service/loading areas, would occupy the entire project site and rise to a maximum height of approximately 218 feet. Above this, the tower portion of the building would be set

back before rising to a total height of approximately 1,190 feet to the top of the screen proposed to screen the building's rooftop mechanical uses.

Scenario 1 would have higher mechanical space requirements than found in a typical office use because it would contain office space suitable for trading floor use. Trading activities rely heavily on computers and other information technology, which requires a significant allocation of space for high-technology equipment and redundant backup systems. Trading activities also require substantially enhanced electrical power (up to four times that required for typical office use, which must be 100 percent uninterrupted and 100 percent redundant [emergency back-up] 24 hours a day, 7 days a week, 365 days a year), 100 percent redundant mechanical and telecommunications systems, and 24-hour air conditioning. To permit installation and servicing of the necessary equipment and to allow for flexibility to reconfigure the equipment needs, the layout must provide the necessary separation of the technical support equipment and the trading floor operations. Overall, this requirement results in a much larger allocation of mechanical space than found in a typical office use.

The service and loading area for Scenario 1 would be located at the eastern portion of the development site and would consist of a through-block area extending from West 32nd to West 33rd Street.

MULTI-TENANT OFFICE SCENARIO (SCENARIO 2)

Scenario 2 would consist of a commercial office building and retail base of approximately 2.66 million gsf (2.05 million zsf). When complete, Scenario 2 would include approximately 1.89 million gsf of commercial office use, 361,711 gsf of retail use, 307,180 gsf of mechanical space, 97,131 gsf of building amenity, lobby, and service and loading area space. Like Scenario 1, a portion of the below grade service area could potentially include 100 below-grade accessory parking spaces.

The main entrance to the office use would be on Seventh Avenue with additional entrances on West 32nd and West 33rd Streets. The retail uses would be located on the ground-floor, one below-grade floor, and an additional two floors above the ground-floor for a total of four retail floors. The building's podium would also contain an additional three floors that could be used for either additional retail space or for trading uses; the podium would rise to a height of approximately 130 feet. The office tower would be set back above the podium and would rise to a total height of approximately 1,216 feet, including mechanical area and a screen to hide the mechanical uses.

Scenario 2 would have substantial mechanical space requirements to provide space for high-technology equipment and redundant backup systems for the proposed trading floor use (although the requirements would be less than with Scenario 1 since less trading floor area would be provided). As detailed above, trading floor activities require substantially enhanced electrical power, 100 percent

redundant mechanical and telecommunications systems, and 24-hour air conditioning.

The service and loading area for Scenario 2 would be divided into two separate areas. The service and loading area for the retail uses would be located on West 32nd Street at the eastern edge of the development site. The service and loading area for the commercial office use would be located on West 33rd Street and would consist of truck elevators that would bring trucks to a below-grade service area.

Table 1 below provides a summary of the two proposed building programs.

Table 1
Proposed Building Program – Single-Tenant and Multi-Tenant Office Scenarios

Project Components	Single-Tenant Office Scenario		Multi-Tenant Office Scenario	
	zsf	Gsf	zsf	gsf
Commercial Office	1,394,481	1,534,594	1,723,371	1,893,814
Trading Floor Component	310,180	340,857	0	0
Retail	11,126	18,266	296,392	361,711[1]
Dedicated Mechanical Floors	0	418,395	0	307,180
Lobby Area, Amenity Space, and Back of House	334,880	509,071	32,904	97,131
Total	2,052,667	2,821,183	2,052,667	2,659,836

Notes: *Proposed Program could include up to 100 accessory parking spaces
zsf = zoning square feet; gsf = gross square feet.
1. In the Multi-Tenant Office Scenario, up to 194,442 zsf (or 211,941 gsf) of this retail space could be utilized for trading uses.

Sources: Pelli Clarke Pelli Architects

FUTURE WITHOUT THE PROPOSED PROJECT

DEVELOPMENT SITE

The future baseline in all technical chapters—future without the proposed project—will assume that none of the discretionary approvals proposed as part of the 15 Penn Plaza project are adopted. It is expected that if the proposed actions are not approved, the project sponsor will develop the 15 Penn Plaza site under existing C6-6 and C6-4.5 zoning with an as-of-right, or No Build, building.

This No Build building will consist of approximately 1.6 million gsf (1.15 million zsf) of which approximately 1.3 million gsf will be office use, 40,600 gsf will be retail use, 202,000 gsf will be mechanical space, and 35,438 gsf will be lobby area and amenity space. Accessory parking for 100 vehicles could be located below-grade (see **Table 2**).

Reference: 15 Penn Plaza Redevelopment Project
Transportation Planning Assumptions

Table 2
No Build Building Program

Project Components	No Build Zoning	
	zsf	gsf
Commercial Office	1,078,867	1,319,914
Retail	37,587	40,600
Mechanical Space		202,000
Lobby Area, Amenity Space, Service, and Loading Areas	32,546	35,438
Total Building Square Footage	1,149,000	1,597,952

Note: *No Build Program could include up to 100 accessory parking spaces

Source: Pelli Clarke Pelli Architects.

OTHER DEVELOPMENT WITHIN THE STUDY AREA

Typically, projected development projects within a ½-mile from a project site that are expected to occur without the Proposed Project are incorporated into the future No Build conditions. Because the traffic study area defined above encompasses intersections within a busy area of midtown Manhattan, No Build projects beyond the typical ½-mile radius were also included.

The assumed no build list is summarized in Table 3 and illustrated in Figure 1.



Development Site

Project Site Boundary

1 *No Build Project to be Completed by 2014 (see Tables 2-3 and 2-4)*

T34 *No Build Project Included in Background Growth for Traffic Analysis*

No Build Projects
Figure 1

Table 3
Projects Under Construction or Expected to Be Complete by 2014
(¼- and ½-Mile Study Areas)

Map #	Site Description	Build Year	Building Program/Comments
Quarter-Mile Study Area			
1	885 Sixth Avenue and West 32nd Street	2010 (under construction)	338 residential units 21,500 gsf office 25,600 gsf retail
2	855 Sixth Avenue between West 30th and West 31st Streets	2010	433 residential units 38,468 gsf retail
3	835 Sixth Avenue between West 29th and West 30th Streets	2010 (under construction)	302 residential units 290,000 gsf hotel (290 hotel rooms) 26,368 gsf retail
4	REMY 815 Sixth Avenue and West 28th Street	2008 (under construction)	269 residential units 59,000 gsf retail
5	145 West 27 Street Midblock between Sixth and Seventh Avenues	2009	11 residential units 1,029 gsf retail
6	261 West 28th Street Midblock between Seventh and Eighth Avenues	2008	55 residential units 5,145 gsf retail
7	415 Eighth Avenue Southwest corner of West 31st Street (Block 754 Lot 44) (Savanna REF)	2010	106 residential units 10,000 gsf retail
8	West 28th/29th/30th Rezoning	2013	1,277 residential units 40,900 gsf local retail
Half-Mile Study Area			
9	Cambria Suites Madison Square Garden Hotel 325 West 33rd Street between Eighth and Ninth Avenues (Glad Tidings Tabernacle)	2009	239 hotel rooms
10	Strand Hotel 33 West 37th Street between Fifth and Sixth Avenues	2009	178 hotel rooms
11	Hudson Yards Sites 32/33 West side of Ninth Avenue between West 31st and West 33rd Streets	2014	4,615,700 gsf office 82,300 gsf retail
12	Hudson Yards Potential Site 62 East side of Tenth Avenue between West 30th and West 31st Streets	2010 (under construction)	220 residential units 235,750 gsf hotel
13	345 West 35th Street between Eighth and Ninth Avenues	2008	100,500 gsf hotel (200 rooms) Garment Center Special District
14	Wyndham Garden Inn 339 West 36th Street between Eighth and Ninth Avenues	2008	224 hotel rooms Garment Center Special District
15	310-328 West 38th Street Midblock on West 37th and West 38th Streets between Eighth and Ninth Avenues	2010 (under construction)	569 residential units 10,600 gsf retail Garment Center Special District
16	Hudson Yards Site 28, Hudson Mews II (South) Dyer Avenue between West 36th and West 37th Streets	2011	361 residential units 16,100 gsf retail 3,660 sf open space
17	Hudson Yards Site 24, Hudson Mews I (North) Dyer Avenue between West 37th and West 38th Streets	2011	448 residential units 7,460 gsf community facility 170 parking spaces
18	Hudson Yards Site 37 Midblock on West 38th and West 39th Street between Eighth and Ninth Avenues (Block 762, Lot 6)	2010	381,990 gsf office 8,520 gsf retail
19	585 Eighth Avenue between West 38th and West 39th Streets	2009	82,906 gsf hotel (169 hotel rooms) Midtown Special District
20	Fairfield Inn and Four Points Hotel 340-342 West 40th Street	2008	500 hotel rooms
21	Staybridge Suites Time Square 334 West 40th Street	2009	310 hotel rooms
22	Hudson Yards Potential Sites 68,70 Eighth Avenue between West 39th and West 40th Streets	2008	1,061 hotel rooms
23	Port Authority Bus Terminal office tower West side of Eighth Avenue between West 41st and West 42nd Streets	2012	1,300,000 gsf office

Table 3 (cont'd)
Projects Under Construction or Expected to Be Complete by 2014
(¼- and ½-Mile Study Areas)

Half-Mile Study Area (cont'd)			
24	11 Times Square West 42nd Street and Eighth Avenue	2011 (under construction)	938,950 gsf office 49,420 gsf retail
25	Bush Tower Annex 140 West 42nd Street between Broadway and Sixth Avenue	2010	140,000 gsf office
26	101 West 24th Street at 735 Sixth Avenue	2008	199 residential units 16,000 gsf retail
27	124 West 24th Street Midblock between Sixth and Seventh Avenues	2008	21 residential units 1,965 gsf retail
28	133 West 22nd Street between Sixth and Seventh Avenues	2008	89 residential units 2,211 gsf retail Proposed 147 public spaces vs. No Action 147 accessory
Note: sf=square feet.			

Table 3 (cont'd)
Projects Under Construction or Expected to Be Complete by 2014
(Transportation Study Area)

Map #	Site Description	Build Year	Building Program/Comments
T1	316 Eleventh Avenue Between West 29th Street and West 30th Streets (Block 701, Lots 62, 68, and 70)	2010 (under construction)	365 residential units 4,820 gsf retail
T2	Hudson Boulevard midblock street and open space: West 33rd to West 36th Street	2013	open space
T3	Southwest corner of Tenth Avenue and West 30th Street (Block 701, Lots 30, 33, 36, 37, 42-44)	2011 (under construction)	382 residential units 30,000 gsf retail 23,000 gsf parking area
T4	Northeast corner of Eleventh Avenue and West 28th Street (Block 700, Lots 1, 49-61)	2009 (under construction)	600 residential units
T5	Hudson Yards Site 11 West side of Tenth Avenue between West 37th and West 38th Streets	2010	855 residential units 65,320 gsf retail
T6	Hudson Yards Site 18 South side of West 43rd Street between Eleventh and Twelfth Avenues	2010 (under construction)	1,000 residential units 37,950 gsf retail
T7	Hudson Yards Site 19, Theater Row II East side of Tenth Avenue between West 41st and West 42nd Streets	2010 (under construction)	774 residential units 230,000 gsf hotel (250 hotel rooms) 12,500 gsf retail 50,000 sf Equinox fitness club 70,000 sf theater 360-car parking garage
T8	Hudson Yards Site 23 East side of Tenth Avenue between West 37th and West 38th Streets	2009 (under construction)	388 residential units 20,900 gsf retail
T9	Hudson River Park (portions of Segment 5)	2009	9.2 acres parkland
T10	West Chelsea Projected Site 4 547-59 West 27th Street (Block 699, Lot 5)	2012	118 residential units 15,548 gsf retail (Conversion of existing building)
T11	West Chelsea Projected Site 5 507-17 West 27th Street (Block 699, Lots 9, 22-27, 44)	2012	283 residential units 39,976 gsf retail
T12	West Chelsea Projected Site 6 299-311 Tenth Avenue (Block 699, Lots 29, 31-33, 37)	2012	159 residential units 28,637 gsf retail
T13	West Chelsea Projected Site 7 550-558 West 27th Street (Block 698, Lot 1) Otis Elevator Building	2012	57,500 gsf office
T14	520 West 27th Street Midblock between Tenth and Eleventh Avenues	2009	43,400 gsf office

Table 3 (cont'd)
Projects Under Construction or Expected to Be Complete by 2014
(Transportation Study Area)

Map #	Site Description	Build Year	Building Program/Comments
T15	Spindler Site West 26th Street and Tenth Avenue (Block 698, Lots 28, 32)	2012	31 residential units 26,250 gsf hotel (53 hotel rooms)
T16	West Chelsea Projected Site 9 507 West 25th Street (Block 697, Lots 27 and 31)	2012	175 residential units 8,888 gsf retail
T17	420 West 25th Street Midblock between Ninth and Tenth Avenues	2009	76 residential units 7,110 gsf retail
T18	West Chelsea Projected Site 10 550 West 25th Street (Block 696, Lot 58)	2012	110,598 gsf community facility
T19	245 Tenth Avenue	2009	18 residential units
T20	Highline 519 519 West 23rd Street Midblock between Tenth and Eleventh Avenues	2008	22 residential units
T21	200 Eleventh Avenue	2009	16 residential units
T22	552 West 24th Street	2009	15 residential units
T23	23 West 23rd Street	2009	11 residential units
T24	10 Chelsea 500 West 23rd Street	2009	68 residential units
T25	Time Warner garage site Between West 21st and West 22nd Streets (Block 693, Lot 23)	2012	155,925 gsf hotel (312 hotel rooms)
T26	High Line Open Space	2010	4.41 acres open space
T27	West Chelsea Projected Site 13 550 West 21st Street (Block 692, Lots 7, 61, 63)	2012	133 residential units 7,331 gsf retail
T28	West Chelsea Projected Site 14 540-542 West 21st Street (Block 692, Lots 53, 57)	2012	88,128 gsf community facility
T29	West Chelsea Projected Site 15 521-527 West 20th Street (Block 692, Lots 28, 30)	2012	87 residential units 43,420 gsf retail
T30	Nouvel on 19th Street West 19th Street and Eleventh Avenue	2009	72 residential units
T31	Metal Shutter Houses West 19th Street	2009	9 residential units
T32	520 West Chelsea 520 West 19th Street	2008	26 residential units
T33	High Line Bonus Site C, West Chelsea Subarea G Tenth Avenue between West 18th and West 19th Streets	2012	341 residential units
T34	High Line Bonus Site B, West Chelsea Subarea H (Block 689, Lot 17)	2012	945 residential units
T35	306 West 44th Street	2010	484,820 gsf hotel 11,500 gsf retail

Reference: 15 Penn Plaza Redevelopment Project
Transportation Planning Assumptions

TRANSPORTATION PLANNING ASSUMPTIONS

The transportation planning assumptions used to forecast travel demand from the project's office and retail components are discussed below. Similarly, the assumptions used to forecast travel demand for other development projects without the Proposed Action, including residential, office, hotel, destination retail, community facility and manufacturing uses, are summarized below. The trip generation rates, temporal distributions and mode choice assumptions were based on accepted CEQR criteria, standard professional references, and studies that have been done for similar uses in Manhattan. These sources were supplemented by data from the 2000 Census and the ITE Trip Generation, 7th Edition.

Wherever possible, transportation planning assumptions, including mode split, trip generation and trip assignment, are consistent with assumptions stated in previous EIS work.

OFFICE (PROPOSED PROJECT)

Daily Trip Rates – The travel demand forecasts for the project's office components were based on weekday trip rates from the *Hudson Yards Rezoning and Development Program FGEIS*.

Vehicle Occupancy and Temporal and Directional Distributions – These trip characteristics were obtained from the *Hudson Yards Rezoning and Development Program FGEIS* and other approved EIS documents.

Mode Split – The mode split distributions for office uses were obtained from an interagency working group, led by City Planning, and were based upon the following principles:

- 2000 Census Reverse Journey-to-Work (RJTW) data sets are used as the exclusive data source.
- For the peak hour traffic, transit and pedestrian impact analyses, office mode split distributions derived from the 7:30 to 9:30 AM Peak Period RJTW data were determined to be the most appropriate ones to use.
- When the character of an area is expected to change as a result of the Proposed Action, the working group may make minor adjustments.
- To the maximum extent practical, the mode split distribution for an area should be based upon the individual census tracts that comprise the area.
- The "worked at home" category should remain in the mode split percentage distributions for office uses, based upon the recommendation of City Planning's Census and Population Division.
- For the Hudson Yards area, west of Ninth Avenue, the mode split distribution should be derived from 2000 Census RJTW data based upon the previously approved methodology in the *Hudson Yards FGEIS, Appendix S-1,* as furnished by the working group.

The working group divided the greater study area into twelve areas – Areas A through Area L – which due splitting some areas into subareas, resulted in 20 different mode split distributions. These distributions are summarized in Table 4 and illustrated in Figure 2. The underlying census tract source for each subarea's mode split distribution is shown in this table. Footnotes at the bottom of the table provide additional information, where applicable.

Trucking Characteristics – The weekday office truck trip rate and temporal distribution are based on the results of the Philip Habib & Associates' June 10, 2004 survey at existing office buildings in Midtown and Lower Manhattan, as reported in the *Atlantic Yards Arena & Redevelopment Project FEIS*, November 2006.

TRADING FLOORS (PROPOSED PROJECT)

Daily Trip Rates – The travel demand forecasts for the project's trading floor components were based on weekday trip rates from the *New York Stock Exchange New Facility EIS*.

Vehicle Occupancy and Temporal and Directional Distributions – These trip characteristics were obtained from the *New York Stock Exchange New Facility EIS*.

Mode Split – The mode split percentages for office use will also be used for trading floor use.

Trucking Characteristics – The weekday office truck trip rate and temporal distribution are based on the *New York Stock Exchange New Facility EIS*.

LOCAL RETAIL (PROPOSED PROJECT)

The proposed project contains a local retail component. For the purposes of the SEIS, local retail is defined as retail floor area of less than 100,000 gross square feet on a single development site.

Daily Trip Rate – The forecasts of travel demand for the local retail category were based on the weekday trip rate from the *Hudson Yards FGEIS*.

The local (or "neighborhood") retail uses would attract trips primarily from the residential and worker populations on-site and in surrounding neighborhoods. It is, therefore, anticipated that the majority of these trips would be via the walk mode and that many would be "linked" trips (e.g., a trip with multiple purposes, such as stopping at a retail store while commuting to or from work) and would therefore not represent the addition of new discrete trips to the study area transportation systems. For the purposes of the travel demand forecast, it is conservatively assumed that 25 percent of retail trips would be such "linked" trips, which is

Table 4
OFFICE MODE SPLIT DISTRIBUTIONS -- WEST MIDTOWN
2000 Census Reverse Journey-to-Work -- 7:30 to 9:30 AM Peak Period Data
Inter-Agency Working Group Recommendations

West Midtown		7:30 to 9:30 AM Peak Period Mode Split Distribution									2000 Census RJTW - Sources		
Area	Description	Auto	Taxi / Black Car	Bus	Subway	Railroad	Walk	Worked at Home	Other	Total	Census Tract	Period	Notes
A	Hudson Yards west of 9th Av	9.9%	2.4%	15.8%	43.7%	20.1%	7.2%	0.6%	0.3%	100.0%		7:30 AM to 9:30 AM	1
B	Farley Complex	13.8%	1.2%	12.7%	52.6%	15.5%	3.3%	0.9%	0.0%	100.0%	103	7:30 AM to 9:30 AM	2
C	Moynihan Station Subdistrict -- No Action Condition	10.2%	1.0%	12.9%	47.3%	25.1%	3.2%	0.2%	0.1%	100.0%	101	7:30 AM to 9:30 AM	3
D1	PABT Area South #115 – 38th to 42nd St / 8th to 10th Av	10.5%	2.4%	10.4%	63.4%	8.7%	4.1%	0.5%	0.0%	100.0%	115	7:30 AM to 9:30 AM	6
D2	Times Square Area South #113 – 38th to 42nd St / 6th to 8th Av	9.9%	1.6%	16.8%	48.6%	17.6%	5.5%	0.0%	0.0%	100.0%	113	7:30 AM to 9:30 AM	7
E	Other Development East of Seventh Av	9.3%	1.5%	13.7%	53.9%	17.3%	4.3%	0.0%	0.0%	100.0%	109	7:30 AM to 9:30 AM	8
F	35th to 38th St / 7th to 9th Av	9.3%	1.5%	13.7%	53.9%	17.3%	4.3%	0.0%	0.0%	100.0%	109	7:30 AM to 9:30 AM	8
G1	West Chelsea Census Tract #77	13.4%	2.2%	5.9%	45.4%	6.7%	12.5%	13.9%	0.0%	100.0%	77	7:30 AM to 9:30 AM	9
G2	West Chelsea Census Tract #79	16.3%	2.6%	5.2%	35.0%	12.0%	10.0%	18.9%	0.0%	100.0%	79	7:30 AM to 9:30 AM	9
G3	West Chelsea Census Tract #83	12.7%	0.7%	10.3%	53.9%	12.7%	8.0%	1.7%	0.0%	100.0%	83	7:30 AM to 9:30 AM	9
G4	West Chelsea Census Tract #89	11.0%	4.7%	8.4%	31.1%	6.8%	13.7%	24.2%	0.1%	100.0%	89	7:30 AM to 9:30 AM	9
G5	West Chelsea Census Tract #93	18.1%	0.6%	5.7%	32.5%	8.9%	9.7%	24.4%	0.1%	100.0%	93	7:30 AM to 9:30 AM	9
G6	West Chelsea Census Tract #99 -- W 14th to W 30th St / 10th Av to Route 9A	25.1%	4.1%	10.0%	43.2%	10.4%	7.0%	0.2%	0.0%	100.0%	99	7:30 AM to 9:30 AM	9
H	26th to 29th St / 6th to 8th Av	12.3%	1.2%	8.0%	55.0%	15.8%	6.3%	1.4%	0.0%	100.0%	95	7:30 AM to 9:30 AM	10
I	Times Square Area North # 119 - 42nd to 46h St / 6th to 8th Av	8.6%	2.2%	15.3%	49.3%	19.0%	5.5%	0.1%	0.0%	100.0%	119	7:30 AM to 9:30 AM	11
J	PABT Area North #121 - 42nd to 46th St / 8th to 9th Av	11.8%	0.4%	10.8%	46.2%	7.2%	11.7%	11.4%	0.5%	100.0%	121	7:30 AM to 9:30 AM	12
K	One Bryant Park EIS - SEIS Map #16	9.1%	2.5%	16.6%	44.7%	19.3%	7.8%	0.0%	0.0%	100.0%	EIS		13
L	Chelsea Tract #97 - 26th to 29th St / 8th to 10th Av	14.3%	1.3%	12.7%	55.3%	5.5%	6.8%	4.1%	0.0%	100.0%	97	7:30 AM to 9:30 AM	14

Prepared by: Stantec Consulting Services, Inc., as revised by NYCDCP, NYCDOT, NYCT on Friday 01/25/08. Further revised by NYCDCP on 02/07/08, 03/02/08, 03/04/08, 03/10/08, 03/11/08 and 03/20/08.

Notes:

1 Area A -- Updated Hudson Yards FGEIS Appendix S-1, Office Modal Splits Technical Memorandum, May 20, 2003 by DCP, DOT, & NYCT Working Group
2 Area B -- Census Tract 103. Mode split updated to 7:30 to 9:30 AM peak period
3 Area C - Moynihan Station Subdistrict represented by Census Tract 101.
4 Area D1 -- PABT Area, Census Tract 115.
5 Area D2 -- Times Square Census Tract 113.
6 Areas E & F – See working group spreadsheet dated 07-28-07 for Spreadsheet Site Reference #s 21 - 34, 37 - 39.
7 Areas G1 to G5 -- West Chelsea FEIS mode splits have been revised to reflect 7:30 - 9:30 AM peak period arrival mode for office uses
8 Area H – Census Tract 95. Mode split updated to 7:30 - 9:30 AM peak period.
9 Area I -- Census Tract 119. Mode split updated to 7:30 - 9:30 AM peak period.
10 Area J – Census Tract 121. Mode split updated to 7:30 - 9:30 AM peak period.
11 Area K -- One Bryant Park SEIS
12 Area L -- Census Tract 97. Mode split updated to 7:30 - 9:30 AM peak period.

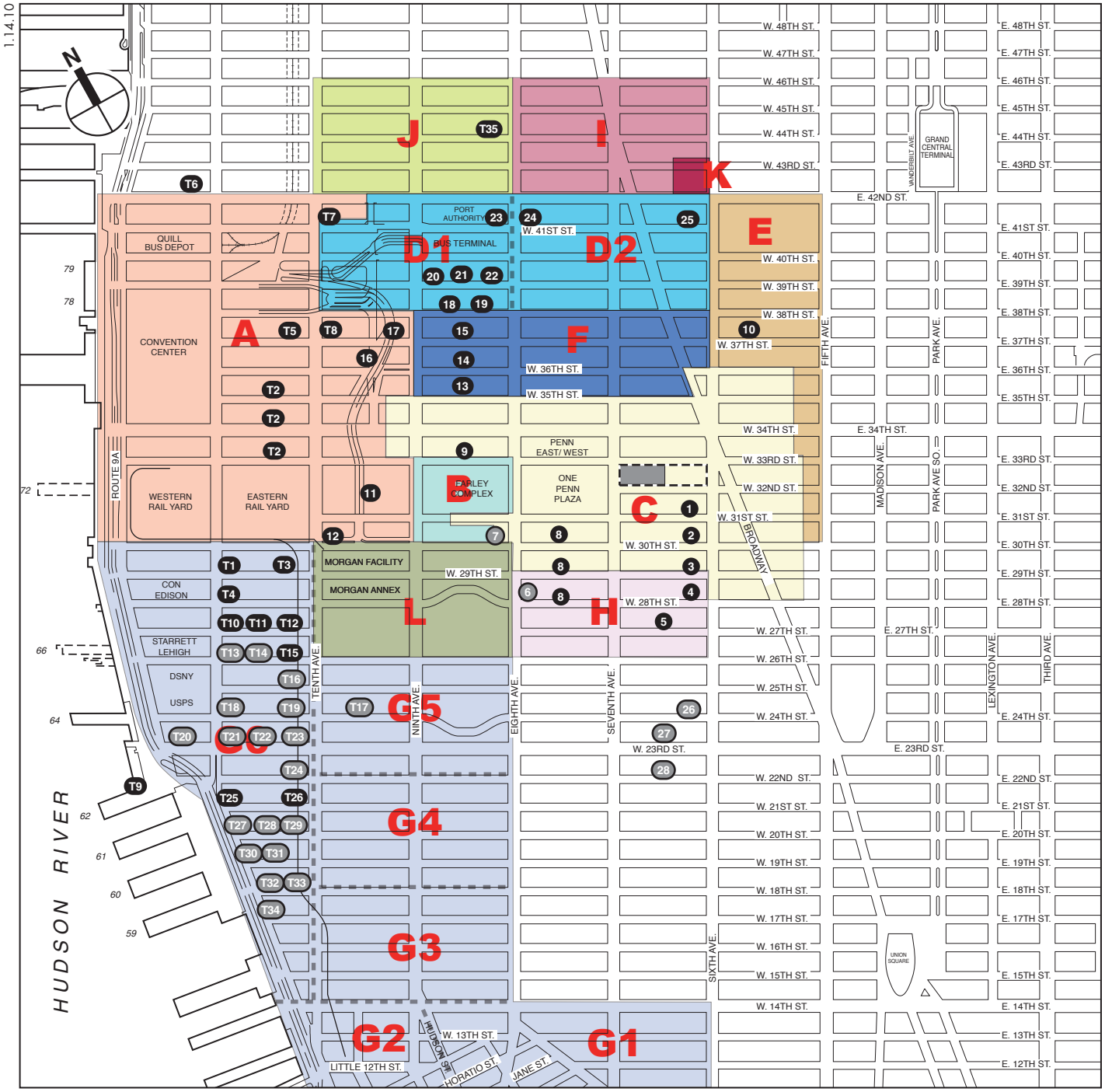

Development Site

Project Site Boundary

1 *No Build Project to be Completed by 2014 (see Tables 2-3 and 2-4)*

T34 *No Build Project Included in Background Growth for Traffic Analysis*

Office Mode Split
Distribution Analysis Areas
Figure 2

consistent with the percentage assumed for local retail uses in the *Hudson Yards FGEIS*.

Vehicle Occupancy and Temporal and Directional Distributions – For local retail, the temporal and directional distributions for weekdays were obtained from the *Hudson Yards FGEIS.*

Mode Split – The mode split percentages are based on the distributions in the *Hudson Yards FGEIS*.

Trucking Characteristics – Truck trip generation rates and temporal distributions are based on the *Curbside Pickup & Delivery Operations & Arterial Traffic Impacts,* FHWA, February, 1981.

DESTINATION RETAIL ((PROPOSED PROJECT)

The future without the Proposed Action includes several projects with more than 300,000 square feet or retail space. For the purposes of the SEIS, destination retail is defined as retail floor area of 100,000 gross square feet or more at a single development site

Daily Trip Rate -- The forecasts of travel demand for the destination retail category were based on the weekday trip rate from the *Hudson Yards FGEIS*. ITE Trip Generation, 7th Edition (Land Use Category 820 – Shopping Centers, Table 3) data for shopping centers with more than 300,000 square feet of GLA was used for destination retail in the immediate vicinity of Penn Station. For destination retail uses elsewhere in the study area, data for shopping centers with 100,000 to 300,000 square feet of GLA was used.

The destination retail uses would attract customers primarily from a distance, but significant number would also be attracted from the residential and worker populations on-site and in surrounding neighborhoods. It is anticipated that a majority of these trips to/from surrounding neighborhoods would be via the walk mode, and that many would be “linked” trips (e.g., a trip with multiple purposes, such as stopping at a retail store while commuting to or from work) and would, therefore, not represent the addition of new discrete trips to the study area transportation systems. For the purposes of the travel demand forecast, it is conservatively assumed that 25 percent of destination retail trips would be “linked” trips, consistent with the rates assumed for other retail developments in New York City, according to the CEQR Manual.

Vehicle Occupancy and Temporal and Directional Distributions – For destination retail, the temporal and directional distributions for weekdays were obtained from the *Hudson Yards FGEIS.* The vehicle occupancy rates were based upon standard values, which were used in *Hudson Yards FGEIS*.

Mode Split – The mode split for the destination retail component of projects without the Proposed Action is based on the distributions in the *Hudson Yards Rezoning and Development Program FGEIS* (Destination Retail, Table 2).

Trucking Characteristics – Truck trip generation rates and temporal distributions are based on the *Curbside Pickup & Delivery Operations & Arterial Traffic Impacts,* FHWA, February, 1981. These assumptions are consistent with the *Hudson Yards Rezoning and Development Program FGEIS*.

Table 5 summarizes the assumed Transportation Planning Factors for the two proposed Build Programs.

Table 5
Transportation Planning Factors

Land Use	Office		Trading Floor		Local Retail		Destination Retail	
Trip Generation								
	(6)	(8)	(2, 4)	(2, 4)	(10, 11)	(11, 12)	(6, 11)	(11, 13)
	Weekday	**Saturday**	**Weekday**	**Saturday**	**Weekday**	**Saturday**	**Weekday**	**Saturday**
Daily Person Trips	18.0	3.87	7125	0	205	240	159	185
Net Daily Person Trips	18.0	3.87	7125	0	154	180	119	139
Temporal Distribution	(1, 14)		(5, 16)		(6, 7)		(6, 13)	
AM (8-9)	11.8%		37.8%		3.1%		0.0%	
MD (12-1)	15.0%		0.0%		19.0%		9.5%	
PM 5-6)	13.7%		35.0%		9.6%		9.8%	
SAT (1-2 PM)	14.7%		0.0%		9.5%		9.9%	
In / Out Directional Split	(1, 14)		(5)		(6)		(6, 13)	
	In	**Out**	**In**	**Out**	**In**	**Out**	**In**	**Out**
AM (8-9)	96%	4%	100%	0%	50%	50%	0%	0%
MD (12-1)	48%	52%	0%	0%	50%	50%	55%	45%
PM 5-6)	5%	95%	0%	100%	50%	50%	47%	53%
SAT (1-2 PM)	57%	43%	0%	0%	50%	50%	52%	48%
Modal Split								
	(9)	(6)	(9)	(6)	(6)		(3, 6)	
Mode	**AM / PM**	**MD / SAT**	**AM / PM**	**MD / SAT**	**ALL**		**PM**	**MD / SAT**
Auto	10.2%	1.5%	10.2%	1.5%	2.0%		9.0%	9.0%
Taxi	1.0%	3.0%	1.0%	3.0%	3.0%		4.0%	4.0%
Bus	12.9%	5.0%	12.9%	5.0%	6.0%		8.0%	8.0%
Subway	47.3%	6.0%	47.3%	6.0%	6.0%		26.5%	20.0%
Railroad	25.1%	1.5%	25.1%	1.5%	0.0%		2.0%	0.0%
Walk	3.2%	83.0%	3.2%	83.0%	83.0%		50.5%	59.0%
Other	0.1%	0.0%	0.1%	0.0%	0.0%		0.0%	0.0%
Work at Home	0.2%	0.0%	0.2%	0.0%	0.0%		0.0%	0.0%
	100.00%	100.0%	100.00%	100.0%	100.00%		100.00%	100.0%
Vehicle Occupancy	(6)		(6)		(6)		(6)	
Auto	1.65		1.65		1.65		2.00	
Taxi	1.40		1.40		1.40		2.00	
Truck Trip Generation								
	(6)	(7)	(6)	(7)	(6)	(7)	(6)	(15)
	Weekday	**Saturday**	**Weekday**	**Saturday**	**Weekday**	**Saturday**	**Weekday**	**Saturday**
Daily Vehicle Trips	0.16	0.01	0.16	0.01	0.35	0.02	0.35	0.02
Temporal Distribution	(7)		(7)		(6, 7)		(6, 15)	
AM (8-9)	7.0%		7.0%		7.7%		7.7%	
MD (12-1)	7.0%		7.0%		11.0%		11.0%	
PM 5-6)	3.0%		3.0%		1.0%		1.0%	
SAT (1-2 PM)	11.0%		11.0%		11.0%		11.0%	
In / Out	In	Out	In	Out	In	Out	In	Out
	50%	50%	50%	50%	50%	50%	50%	50%

Sources:

(1) Pushkarev & Zupan, "Urban Space for Pedestrians," 1975.
(2) New York Stock Exchange New Facility EIS, 1999.
(3) Farley/Moynihan West FEIS, 2006, Table 13-1
(4) Assumes 3,750 new traders employed by member firms
(5) Assumes 95% daily attendance and two trips per person per day, with neglible trips during the midday peak hour
(6) No. 7 Subway Extension - Hudson Yards Rezoning and Development Program FGEIS, 2004.
(7) Atlantic Yards and Arena Redevelopment FEIS, 2006
(8) ITE Trip Generation, 7th Edition, Land Use Code 710: General Office Building Ratio of Weekday to Saturday Trip Generation Rates
(9) Hudson Yards FGEIS, Appendix S-1 Updated by NYCDCP, NYCDOT and NYCT Working Group
(10) City Environmental Quality Review (CEQR) Technical Manual, Appendix 3, 2001
(11) Assumes 25% linked trips for retail uses as per No. 7 Subway Extension - Hudson Yards Rezoning and Development Program FGEIS, 2004.
(12) ITE Trip Generation, 7th Edition, Land Use Code 851: Convenience Retail Ratio of Weekday to Saturday Trip Generation Rates
(13) ITE Trip Generation, 7th Edition, Land Use Code 820: Shopping Center Ratio of Weekday to Saturday Trip Generation Rates
Directional distribution based upon Saturday peak hour of the generator
(14) ITE Trip Generation, 7th Edition, Land Use Code 710: General Office Building Ratio of Saturday Peak Hour Trip Generation Rate to Saturday Daily Rate.
Directional distribution based upon Saturday peak hour of the generator
(15) Assumes same Saturday truck trip generation rate as local retail.
(16) Based on April 1997 survey of NYSE traders and staff

Reference: 15 Penn Plaza Redevelopment Project
Transportation Planning Assumptions

HOTEL (NO BUILD PROJECTS)

Since the Proposed Project involves the removal of the Hotel Pennsylvania, the Hotel's generated trips are removed from the transportation network.

Daily Trip Rates – The travel demand forecast for the hotel is based on trip rates from the *Hudson Yards FGEIS.*

Vehicle Occupancy and Temporal and Directional Distributions – These trip characteristics were obtained from the *Hudson Yards Rezoning and Development Program FGEIS* and other approved EIS documents.

Mode Split – The mode split is based on the distributions in the *Hudson Yards FGEIS*.

Trucking Characteristics – Truck trip generation rates and temporal distributions are based on the *Curbside Pickup & Delivery Operations & Arterial Traffic Impacts,* FHWA, February, 1981.

RESIDENTIAL (NO BUILD PROJECTS)

The future without the Proposed Project includes several development sites with substantial residential components.

Daily Trip Rates – The forecasts of travel demand for a project's residential components were based on weekday person trip rates from *Urban Space for Pedestrians* (Pushkarev & Zupan, 1975).

Vehicle Occupancy and Temporal and Directional Distributions – These trip characteristics were obtained from the *Hudson Yards Rezoning and Development Program FGEIS* and other approved EIS documents.

Mode Split – The mode split distributions for residential uses were calculated by Stantec, based upon guidance received from City Planning and NYCDOT:

- 2000 Census Journey-to-Work (JTW) data sets are to be used as the exclusive data source.
- For the traffic, transit and pedestrian impact analyses, residential mode split distributions are to be derived from daily JTW data, available on City Planning's website.
- To the maximum extent practical, the mode split distribution for an area should be based upon the individual census tracts that comprise the area.
- The "worked at home" category should not be included, as a mode of transportation, when computing the mode split percentage distribution for residential uses, based upon the recommendation of City Planning's Census and Population Division.

- Based upon direction received from City Planning, the method for aggregating the more ambiguous modes (motorcycle, ferryboat, bicycle and other means) approved by their Census and Population Division was used, as follows:
    - Auto = Auto
    - Taxi = Taxi + Motorcycle + Other Means
    - Bus = Bus or Trolley Bus
    - Subway = Street Car or Trolley Car + Subway or Elevated
    - Railroad = Railroad + Ferryboat
    - Walk Only = Bicycle + Walk
    - Work at Home = Work at Home
    - For the Hudson Yards area, west of Ninth Avenue, the residential mode split distribution from the *Hudson Yards FGEIS, Appendix S-1* is used.

The greater study area was divided into fourteen areas – Area A through Area N – which due to splitting some areas into subareas, resulted in 26 different residential mode split distributions. These distributions are summarized in Table 6 and illustrated in Figure 3. The underlying census tract source for each subarea's mode split distribution is shown in this table. Footnotes at the bottom of the table provide additional information, where applicable.

Although residential-based trips in the midday would likely be more local in nature than in the peak commuter hours (and therefore have a higher walk share, for example), the mode split distributions, based on daily census journey-to-work data, is conservatively assumed for all weekday analysis hours.

Trucking Characteristics – Truck trip generation rates and temporal distributions are based on the *Hudson Yards Rezoning and Development Program FGEIS* for the residential category.

COMMUNITY FACILITY (NO BUILD PROJECTS)

The future without the Proposed Actions includes several projects with an undefined community facility component, especially in the Hudson Yards Special District.

Daily Trip Rate – In developing forecasts of travel demand for the community facility category, Stantec considered the Recreational Center and Day Care Center categories from the *Hudson Yards FGEIS*, Appendix S-1. The trip rate for the Recreational Center category was selected, because the daily trip was a little higher.

Vehicle Occupancy and Temporal and Directional Distributions – For a community facility, the temporal and directional distributions for all periods are based on the average for Recreational Center and Day Care Center land use categories from the *Hudson Yards FGEIS*, Appendix S-1.

Table 6
RESIDENTIAL MODE SPLIT DISTRIBUTIONS -- WEST MIDTOWN
2000 Census Journey-to-Work -- Daily Data
Cilty Planning and City DOT Recommendations

West Midtown		Daily Mode Split Distribution									2000 Census JTW - Sources		
Area	Description	Auto	Taxi / Black Car	Bus	Subway	Railroad	Walk	Worked at Home	Other	Total	Manhattan Census Tract	Period	Notes
A	Hudson Yards west of 9th Av	6.6%	6.5%	5.8%	37.5%	2.0%	40.3%	-	1.3%	100.0%	EIS	Daily	1
B	Farley Complex Area	8.9%	7.3%	6.8%	52.0%	0.4%	24.5%	-	0.0%	100.0%	103	Daily	2
C	Penn Station Area #101	0.0%	11.8%	0.0%	59.1%	0.0%	29.1%	-	0.0%	100.0%	101	Daily	3
D1	PABT Area South #115 – 38th to 42nd St / 8th to 10th Av	8.6%	2.4%	7.3%	35.5%	2.6%	43.5%	-	0.0%	100.0%	115	Daily	4
D2	Times Square Area South #113 – 38th to 42nd St / 6th to 8th Av	28.1%	0.0%	6.3%	23.4%	0.0%	42.2%	-	0.0%	100.0%	113	Daily	4
E1	Herald Sq East Area #84 35 to 42 St / 5th to 6th Av	7.8%	3.9%	4.3%	45.4%	0.0%	38.6%	-	0.0%	100.0%	84	Daily	5
E2	Greeley Sq Area #76 - 28 to 35 St / 5th to 6th Av	8.5%	3.3%	5.3%	39.9%	1.1%	41.8%	-	0.0%	100.0%	76	Daily	5
F	35th to 38th St / 7th to 9th Av	0.0%	69.1%	0.0%	30.9%	0.0%	0.0%	-	0.0%	100.0%	109	Daily	6
G1	West Chelsea Census Tract #77	6.7%	6.0%	3.7%	55.6%	1.3%	26.8%	-	0.0%	100.0%	77	Daily	7
G2	West Chelsea Census Tract #79	10.8%	13.8%	3.1%	49.2%	0.9%	22.2%	-	0.0%	100.0%	79	Daily	7
G3	West Chelsea Census Tract #83	4.1%	7.1%	7.7%	55.1%	0.4%	25.6%	-	0.0%	100.0%	83	Daily	7
G4	West Chelsea Census Tract #89	8.8%	10.9%	6.9%	42.7%	1.7%	29.0%	-	0.0%	100.0%	89	Daily	7
G5	West Chelsea Census Tract #93	7.1%	9.5%	9.6%	44.4%	1.1%	28.3%	-	0.0%	100.0%	93	Daily	7
G6	West Chelsea Census Tract #99 -- W 14th to W 30th St / 10th Av to Route 9A	17.4%	19.1%	9.3%	27.2%	0.0%	27.0%	-	0.0%	100.0%	99	Daily	7
H1	East Chelsea Census Tract #95 - 26th to 29th St / 6th to 8th Av	7.5%	8.4%	1.4%	39.5%	4.5%	38.6%	-	0.0%	100.0%	95	Daily	8
H2	East Chelsea Census Tract #95 - 22 to 26 St / 6th to 8th Av	7.0%	4.0%	2.2%	54.6%	1.1%	31.1%	-	0.0%	100.0%	91	Daily	8
H3	East Chelsea Census Tract #95 - 18 to 22 St / 6th to 8th Av	7.8%	6.9%	1.7%	52.8%	0.9%	29.9%	-	0.0%	100.0%	87	Daily	8
H4	East Chelsea Census Tract #95 - 14 to 18 St / 6th to 8th Av	8.6%	3.7%	2.9%	59.7%	1.2%	23.9%	-	0.0%	100.0%	81	Daily	8
I	Times Square Area North # 119 - 42nd to 46h St / 6th to 8th Av	6.8%	1.1%	5.6%	42.7%	0.0%	43.8%	-	0.0%	100.0%	119	Daily	9
J	Southeast Clinton #121 - 42nd to 46th St / 8th to 10th Av	7.8%	4.8%	8.1%	36.0%	1.4%	41.9%	-	0.0%	100.0%	121	Daily	10
K	One Bryant Park EIS - SEIS Map #16	6.8%	1.1%	5.6%	42.7%	0.0%	43.8%	-	0.0%	100.0%	119	Daily	11
L	Chelsea Tract #97 - 26th to 29th St / 8th to 10th Av	5.2%	6.4%	4.9%	51.1%	1.5%	30.9%	-	0.0%	100.0%	97	Daily	12

Table 6
RESIDENTIAL MODE SPLIT DISTRIBUTIONS -- WEST MIDTOWN
2000 Census Journey-to-Work -- Daily Data
Cilty Planning and City DOT Recommendations

West Midtown		Daily Mode Split Distribution									2000 Census JTW - Sources		
Area	Description	Auto	Taxi / Black Car	Bus	Subway	Railroad	Walk	Worked at Home	Other	Total	Manhattan Census Tract	Period	Notes
M	Southwest Clinton #129 - 42 to 50 St / 10th to 12th Av	5.1%	8.4%	16.1%	26.7%	1.3%	42.4%	-	0.0%	100.0%	129	Daily	13
N1	Flatiron/Ladies Mile Census Tract #52 - 14 to 21 St / 5th to 6th Av	5.0%	10.2%	1.1%	47.2%	0.3%	36.2%	-	0.0%	100.0%	52	Daily	14
N2	Madison Sq Census Tract #56 - E 21 to E 28 St / 5th to Park Av	7.5%	7.5%	2.1%	49.0%	1.6%	32.4%	-	0.0%	100.0%	56	Daily	14
N3	Flatiron/Ladies Mile Census Tract #58 - 21 to 28 St / 5th to 6th Av	1.6%	8.8%	7.7%	43.9%	2.3%	35.7%	-	0.0%	100.0%	58	Daily	14

Prepared by: Stantec Consulting Services, Inc. from daily 2000 Census Journey-to-Work data available from NYCDP Web-site. Summarized based upon guidance from NYCDCP as furnished AKRF, Inc.

Notes:

1 Area A -- Hudson Yards FGEIS, Appendix S-1, Residential
2 Area B -- Census Tract 103
3 Area C - Census Tract 101
4 Areas D1 & D2 -- Census Tracts 115 and 113, respectively
5 Areas E1 and E2 -- Census Tracts 84 and 76, respectively
6 Area F - Represented by Census Tract 109
7 Areas G1 to G6 -- Census Tracts 77, 79, 83, 89, 93 and 99, respectively
8 Area H1 to H4 – Census Tracts 95, 91, 87 and 81, respectively.
9 Area I -- Census Tract 119
10 Area J – Census Tract 121
11 Area K -- Census Tract 119
12 Area L -- Census Tract 97
13 Area M -- Census Tract 129
14 Areas N1 to N3 -- Census Tracts 52, 56 and 58, respectively

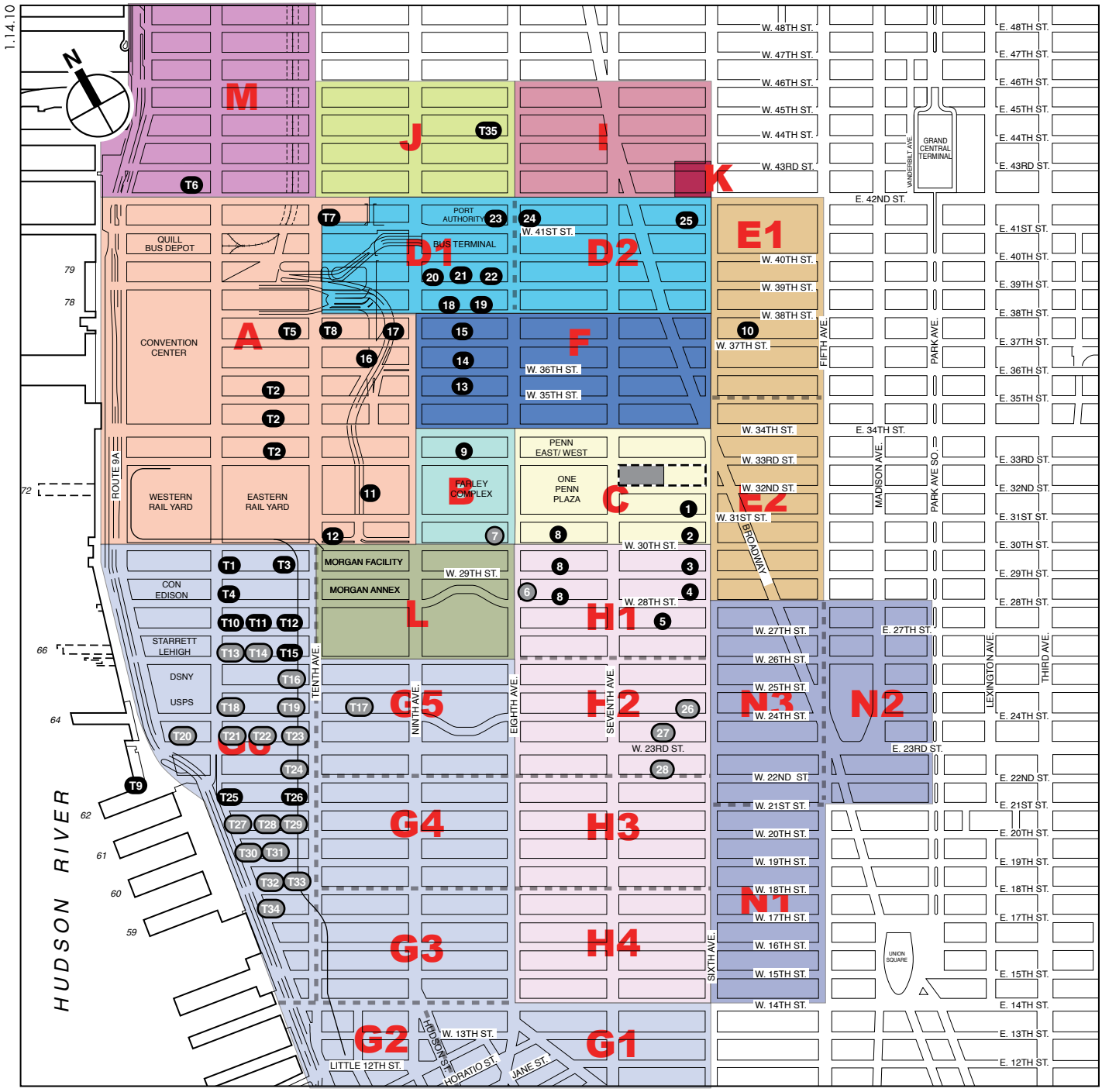

Development Site

Project Site Boundary

No Build Project to be Completed by 2014 (see Tables 2-3 and 2-4)

No Build Project Included in Background Growth for Traffic Analysis

0 1000 2000 FEET

SCALE

Residential Mode Split Distribution Analysis Areas
Figure 3

Mode Split – The mode split percentages distributions are based on the average of the mode split distributions for Recreational Center and Day Care Center land use categories from the *Hudson Yards FGEIS*, Appendix S-1.

Trucking Characteristics – Truck trip generation rates and temporal distributions are based on the averages of these characteristics for Recreational Center and Day Care Center land use categories from the *Hudson Yards FGEIS*, Appendix S-1.

MANUFACTURING (NO BUILD PROJECTS)

The future without the Proposed Actions includes several existing sites with manufacturing uses.

Daily Trip Rate – The forecasts of travel demand for the manufacturing category is based on the weekday trip rate from the *Hudson Yards FGEIS*, Appendix S-1.

Vehicle Occupancy and Temporal and Directional Distributions – For the manufacturing category, the temporal and directional distributions for all periods were obtained from the *Hudson Yards FGEIS*, Appendix S-1.

Mode Split – The weekday AM and PM mode split percentage distributions are based upon an update of the methodology used in the *Hudson Yards FGEIS,* which was based on 2000 US Census reverse journey-to-work data for census tracts between 23rd and 59th Streets, Third and Eighth Avenues. The midday mode split percentages were based upon the *Hudson Yards FGEIS*.

Trucking Characteristics – Truck trip generation rates and temporal distributions are based on the *Hudson Yards Rezoning and Development Program FGEIS* for the manufacturing category.

Reference: 15 Penn Plaza Redevelopment Project
Transportation Planning Assumptions

STUDY AREA

TRAFFIC

The primary study area, which was developed to account for the principal travel corridors to/from the development site, including 43 intersections for analysis bounded by West 35th Street to the north, Madison Avenue to the east, West 30th Street to the south, and Eighth Avenue to the west will be analyzed. Preliminary trip generation and assignment patterns suggest an additional ten to twelve key intersections with regional traffic connections along West 34th Street will need to be analyzed, including the intersections at Ninth Avenue, Park Avenue, Lexington Avenue, Third Avenue, Second Avenue, First Avenue, and the FDR Drive.

PEDESTRIAN / TRANSIT

Preliminary trip generation and assignment suggest a pedestrian and transit study area encompassing the area bounded by West 34th Street on the north, 6th Avenue / Broadway on the east, West 31st Street on the south, and 8th Avenue on the west.

In addition, the following subway stations will be analyzed:

- 34th Street Station on the Eighth Avenue Line (A, C, and E routes)
- 34th Street Station on the Seventh Avenue Line (1, 2, and 3 routes)
- Herald Square Station Complex (B, D, F, N, Q, R, W, V, and PATH)

Key station elements within each of these subway stations will be analyzed, including stairways, escalators, and control areas. Trip assignment patterns will be submitted for review and the study area adjusted accordingly.

SELECTION OF PEAK HOURS FOR ANALYSIS

On weekdays, the proposed project's office and retail components are expected to generate their highest demand during the traditional 8-9 AM and 5-6 PM commuter periods as well as during the 12-1 PM midday (lunch time) period. Due to the higher retail component for the multi-tenant program, a Saturday midday peak hour 12-1 PM will also be analyzed.

TRIP GENERATION

The incremental difference in person and vehicle trips expected to result from the proposed action by 2014 were derived for the two build programs – the Single Tenant and Multi-Tenant Scenarios. Tables 7 and 8 provide an estimate of the incremental net change in peak hour person trips (versus the No-Action condition) that would occur in 2014.

Table 7
Incremental Person Trips - Single Tenant Scenario

LAND USE		AM Peak Hour								MD Peak Hour							
		Auto	Taxi	Bus	Subway	Railroad	Walk	Other	Total	Auto	Taxi	Bus	Subway	Railroad	Walk	Other	Total
Office 214,680 gsf	**In**	45	4	56	207	110	14	1	437	4	8	14	17	4	231	0	278
	Out	2	1	2	9	5	1	0	20	5	9	15	18	5	250	0	302
	Total	47	5	58	216	115	15	1	457	9	17	29	35	9	481	0	580
Trading Floor 5 floors - 340,857 gsf	**In**	275	27	347	1274	676	86	8	2693	0	0	0	0	0	0	0	0
	Out	0	0	0	0	0	0	0	0	0	0	0	0	0	0	0	0
	Total	275	27	347	1274	676	86	8	2693	0	0	0	0	0	0	0	0
Local Retail -22,334 gsf	**In**	-1	-2	-3	-3	0	-44	0	-53	-7	-10	-20	-20	0	-271	0	-328
	Out	-1	-2	-3	-3	0	-44	0	-53	-7	-10	-20	-20	0	-271	0	-328
	Total	-2	-4	-6	-6	0	-88	0	-106	-14	-20	-40	-40	0	-542	0	-656
Destination Retail 0 gsf	**In**																
	Out																
	Total																
Total Trips	**In**	**319**	**29**	**400**	**1478**	**786**	**56**	**9**	**3077**	-3	-2	-6	-3	4	-40	0	-50
	Out	**1**	**-1**	**-1**	**6**	**5**	**-43**	**0**	**-33**	-2	-1	-5	-2	5	-21	0	-26
	Total	**320**	**28**	**399**	**1484**	**791**	**13**	**9**	**3044**	-5	-3	-11	-5	9	-61	0	-76

LAND USE		PM Peak Hour								SAT Peak Hour							
		Auto	Taxi	Bus	Subway	Railroad	Walk	Other	Total	Auto	Taxi	Bus	Subway	Railroad	Walk	Other	Total
Office 214,680 gsf	**In**	3	0	3	13	7	1	0	27	7	1	9	32	17	2	0	68
	Out	51	5	65	238	126	16	2	503	6	1	7	27	14	2	0	57
	Total	54	5	68	251	133	17	2	530	13	2	16	59	31	4	0	125
Trading Floor 5 floors - 340,857 gsf	**In**	0	0	0	0	0	0	0	0	0	0	0	0	0	0	0	0
	Out	254	25	322	1180	626	80	7	2494	0	0	0	0	0	0	0	0
	Total	254	25	322	1180	626	80	7	2494	0	0	0	0	0	0	0	0
Local Retail -22,334 gsf	**In**	-3	-5	-10	-10	0	-137	0	-165	-4	-6	-11	-11	0	-158	0	-190
	Out	-3	-5	-10	-10	0	-137	0	-165	-4	-6	-11	-11	0	-158	0	-190
	Total	-6	-10	-20	-20	0	-274	0	-330	-8	-12	-22	-22	0	-316	0	-380
Destination Retail 0 gsf	**In**																
	Out																
	Total																
Total Trips	**In**	0	-5	-7	3	7	-136	0	-138	3	-5	-2	21	17	-156	0	-122
	Out	302	25	377	1408	752	-41	9	2832	2	-5	-4	16	14	-156	0	-133
	Total	302	20	370	1411	759	-177	9	2694	5	-10	-6	37	31	-312	0	-255

Table 8
Incremental Person Trips - Multi Tenant Scenario

LAND USE		AM Peak Hour								MD Peak Hour							
		Auto	Taxi	Bus	Subway	Railroad	Walk	Other	Total	Auto	Taxi	Bus	Subway	Railroad	Walk	Other	Total
Office 573,900 gsf	**In**	119	12	151	554	294	37	3	1170	11	22	37	45	11	617	0	744
	Out	5	0	6	23	12	2	0	49	12	24	40	48	12	669	0	806
	Total	124	12	157	577	306	39	3	1218	23	46	77	93	23	1286	0	1550
Trading Floor 0 gsf	**In**																
	Out																
	Total																
Local Retail -40,600 gsf	**In**	-2	-3	-6	-6	0	-80	0	-97	-12	-18	-36	-36	0	-493	0	-594
	Out	-2	-3	-6	-6	0	-80	0	-97	-12	-18	-36	-36	0	-493	0	-594
	Total	-4	-6	-12	-12	0	-161	0	-194	-24	-36	-71	-71	0	-986	0	-1188
Destination Retail 361,711 gsf	**In**	0	0	0	0	0	0	0	0	201	89	179	447	0	1317	0	2233
	Out	0	0	0	0	0	0	0	0	167	74	149	371	0	1095	0	1857
	Total	0	0	0	0	0	0	0	0	368	164	327	818	0	2413	0	4089
Total Trips	**In**	117	9	145	548	294	-43	3	1073	**200**	**94**	**180**	**456**	**11**	**1442**	**0**	**2382**
	Out	3	-2	0	17	12	-79	0	-48	**167**	**81**	**153**	**384**	**12**	**1271**	**0**	**2068**
	Total	120	7	145	565	306	-122	3	1025	**367**	**175**	**333**	**840**	**23**	**2713**	**0**	**4450**

LAND USE		PM Peak Hour								SAT Peak Hour							
		Auto	Taxi	Bus	Subway	Railroad	Walk	Other	Total	Auto	Taxi	Bus	Subway	Railroad	Walk	Other	Total
Office 573,900 gsf	**In**	7	1	9	33	18	2	0	71	18	2	23	85	45	6	1	180
	Out	137	13	173	636	337	43	3	1343	16	2	20	72	38	5	1	154
	Total	144	14	183	669	355	45	3	1414	34	3	43	158	84	11	2	334
Trading Floor 0 gsf	**In**																
	Out																
	Total																
Local Retail -40,600 gsf	**In**	-6	-9	-18	-18	0	-249	0	-300	-7	-10	-21	-21	0	-288	0	-347
	Out	-6	-9	-18	-18	0	-249	0	-300	-7	-10	-21	-21	0	-288	0	-347
	Total	-12	-18	-36	-36	0	-498	0	-600	-14	-21	-42	-42	0	-576	0	-694
Destination Retail 361,711 gsf	**In**	177	79	157	521	39	994	0	1967	245	109	217	543	0	1603	0	2717
	Out	203	90	180	596	45	1137	0	2251	203	90	181	452	0	1334	0	2261
	Total	380	169	337	1117	84	2131	0	4218	448	199	398	996	0	2937	0	4978
Total Trips	**In**	**178**	**70**	**148**	**537**	**57**	**747**	**0**	**1737**	**256**	**100**	**220**	**608**	**45**	**1321**	**1**	**2550**
	Out	**334**	**94**	**336**	**1214**	**382**	**931**	**3**	**3295**	**212**	**82**	**180**	**504**	**38**	**1050**	**1**	**2067**
	Total	**512**	**164**	**484**	**1751**	**439**	**1678**	**3**	**5032**	**468**	**182**	**400**	**1112**	**83**	**2371**	**2**	**4617**

As shown in Table 7 under the Single Tenant Scenario, the proposed action would generate an increase of approximately 3,040 total person trips in the weekday AM peak hour, a decrease of 80 person trips in the weekday midday peak hour, an increase of 2,690 person trips in the weekday PM peak hour and a decrease of 260 person trips in the Saturday peak hour, compared to the No-Action condition. Person trips by auto and taxi would increase by a net total of 350 in the weekday AM peak hour, decrease by 10 in the weekday midday peak hour, increase by 320 in the weekday PM peak hour and decrease by 10 in the Saturday peak hour. Peak hour subway trips would increase by 1,480 in the weekday AM peak hour, decrease by 10 in the weekday midday peak hour, increase by 1,410 in the weekday PM peak hour and increase by 40 in the Saturday peak hour. Peak hour bus trips would increase by 400 in the weekday AM peak hour, decrease by 10 in the weekday midday peak hour, increase by 370 in the weekday PM peak hour and decrease by 10 in the Saturday peak hour. Peak hour commuter railroad trips would increase by 790 in the weekday AM peak hour, 10 in the weekday midday peak hour, 760 in the weekday PM peak hour and by 30 in the Saturday peak hour. Trips made solely by the walk mode would increase by 10 in the weekday AM peak hour, decrease by 60 in the weekday midday peak hour, decrease by 180 in the weekday PM peak hour and decrease by 310 in the Saturday peak hour.

As shown in Table 8 under the Multi-Tenant Scenario, the proposed action would generate an increase of approximately 1,020 total person trips in the weekday AM peak hour, 4,450 person trips in the weekday midday peak hour, 5,030 person trips in the weekday PM peak hour and 4,620 person trips in the Saturday peak hour, compared to the No-Action condition. Person trips by auto and taxi would increase by a net total of 130 in the weekday AM peak hour, 540 in the weekday midday peak hour, 680 in the weekday PM peak hour and 650 in the Saturday peak hour. Peak hour subway trips would increase by 570 in the weekday AM peak hour, 840 in the weekday midday peak hour, 1,750 in the weekday PM peak hour and 1,110 in the Saturday peak hour. Peak hour bus trips would increase by approximately 150 in the weekday AM peak hour, 330 in the weekday midday peak hour, 480 in the weekday PM peak hour and 400 in the Saturday peak hour. Peak hour commuter railroad trips would increase by 310 in the weekday AM peak hour, 20 in the weekday midday peak hour, 440 in the weekday PM peak hour and by 80 in the Saturday peak hour. Trips made solely by the walk mode would decrease by approximately 120 in the weekday AM peak hour, increase by 2,710 in the weekday midday peak hour, 1,680 in the weekday PM peak hour and 2,370 in the Saturday peak hour.

Tables 9 and 10 provide an estimate of the incremental net change in peak hour vehicle trips (auto, taxi and truck) that would occur in 2014.

As shown in Table 9 under the Single Tenant Scenario, the proposed action would generate an increase of approximately 240 vehicle trips in the weekday AM peak

Table 9
Incremental Vehicle Trips - Single Tenant Scenario

LAND USE		AM Peak Hour					MD Peak Hour				
		Auto	Truck	Taxi	Balanced Taxi	Total	Auto	Truck	Taxi	Balanced Taxi	Total
Office	In	27	1	3	-	31	3	1	6	-	10
	Out	1	1	0	-	2	3	1	6	-	10
	Total	28	2	3	-	33	6	2	12	-	20
Trading Floor	In	166	2	19	-	187	0	2	0	-	2
	Out	0	2	0	-	2	0	2	0	-	2
	Total	166	4	19	-	189	0	4	0	-	4
Local Retail	In	-1	0	-1	-	-2	-4	0	-7	-	-11
	Out	-1	0	-1	-	-2	-4	0	-7	-	-11
	Total	-2	0	-2	-	-4	-8	0	-14	-	-22
Destination Retail	In				-	0				-	0
	Out				-	0				-	0
	Total				-	0				-	0
Total Trips	In	**192**	**3**	**21**	**21**	**216**	-1	3	-1	0	2
	Out	**0**	**3**	**-1**	**21**	**24**	-1	3	-1	0	2
	Total	**192**	**6**	**20**	**42**	**240**	-2	6	-2	0	4

LAND USE		PM Peak Hour					SAT Peak Hour				
		Auto	Truck	Taxi	Balanced Taxi	Total	Auto	Truck	Taxi	Balanced Taxi	Total
Office	In	2	1	0	-	3	4	0	1	-	5
	Out	31	1	4	-	36	4	0	1	-	5
	Total	33	2	4	-	39	8	0	2	-	10
Trading Floor	In	0	2	0	-	2	0	0	0	-	0
	Out	154	2	18	-	174	0	0	0	-	0
	Total	154	4	18	-	176	0	0	0	-	0
Local Retail	In	-2	0	-4	-	-6	-2	0	-4	-	-6
	Out	-2	0	-4	-	-6	-2	0	-4	-	-6
	Total	-4	0	-8	-	-12	-4	0	-8	-	-12
Destination Retail	In				-	0				-	0
	Out				-	0				-	0
	Total				-	0				-	0
Total Trips	In	0	3	-4	18	21	2	0	-3	0	2
	Out	183	3	18	18	204	2	0	-3	0	2
	Total	183	6	14	36	225	4	0	-6	0	4

Table 10
Incremental Vehicle Trips - Multi Tenant Scenario

LAND USE		AM Peak Hour					MD Peak Hour				
		Auto	Truck	Taxi	Balanced Taxi	Total	Auto	Truck	Taxi	Balanced Taxi	Total
Office	In	72	3	8	-	83	7	3	16	-	26
	Out	3	3	1	-	7	7	3	17	-	27
	Total	75	6	9	-	90	14	6	33	-	53
Trading Floor	In	0	0	0	-	0	0	0	0	-	0
	Out	0	0	0	-	0	0	0	0	-	0
	Total	0	0	0	-	0	0	0	0	-	0
Local Retail	In	-1	-1	-2	-	-4	-7	-1	-13	-	-21
	Out	-1	-1	-2	-	-4	-7	-1	-13	-	-21
	Total	-2	-2	-4	-	-8	-14	-2	-26	-	-42
Destination Retail	In	0	5	0	-	5	100	7	45	-	152
	Out	0	5	0	-	5	84	7	37	-	128
	Total	0	10	0	-	10	184	14	82	-	280
Total Trips	In	71	7	6	6	84	**100**	**9**	**48**	**67**	**176**
	Out	2	7	-1	6	15	**84**	**9**	**41**	**67**	**160**
	Total	73	14	5	12	99	**184**	**18**	**89**	**134**	**336**

LAND USE		PM Peak Hour					SAT Peak Hour				
		Auto	Truck	Taxi	Balanced Taxi	Total	Auto	Truck	Taxi	Balanced Taxi	Total
Office	In	4	2	1	-	7	11	1	1	-	13
	Out	83	2	10	-	95	9	1	1	-	11
	Total	87	4	11	-	102	20	2	2	-	24
Trading Floor	In	0	0	0	-	0	0	0	0	-	0
	Out	0	0	0	-	0	0	0	0	-	0
	Total	0	0	0	-	0	0	0	0	-	0
Local Retail	In	-4	0	-6	-	-10	-4	0	-7	-	-11
	Out	-4	0	-6	-	-10	-4	0	-7	-	-11
	Total	-8	0	-12	-	-20	-8	0	-14	-	-22
Destination Retail	In	89	1	39	-	129	122	1	54	-	177
	Out	101	1	45	-	147	102	1	45	-	148
	Total	190	2	84	-	276	224	2	99	-	325
Total Trips	In	**89**	**3**	**34**	**62**	**154**	**129**	**2**	**48**	**65**	**196**
	Out	**180**	**3**	**49**	**62**	**245**	**107**	**2**	**39**	**65**	**174**
	Total	**269**	**6**	**83**	**124**	**399**	**236**	**4**	**87**	**130**	**370**

hour, 4 vehicle trips in the weekday midday peak hour, 225 vehicle trips in the weekday PM peak hour and 4 vehicle trips in the Saturday peak hour, compared to the No-Action condition.

As shown in Table 10 under the Multi-Tenant Scenario, the proposed action would generate an increase of approximately 100 vehicle trips in the weekday AM peak hour, 340 vehicle trips in the weekday midday peak hour, 400 vehicle trips in the weekday PM peak hour and 370 vehicle trips in the Saturday peak hour, compared to the No-Action condition.

TRIP DISTRIBUTION

Trip directional distributions were developed by Stantec for autos, taxis and trucks. In order to maintain consistency, trip distribution assumptions from the *Expanded Moynihan / Penn Station Redevelopment* Project were used.

AUTO

The auto trip directional distribution was developed based upon data from the Hub-Bound 2003 Travel Report, prepared by the New York Metropolitan Transportation Council and released in February 2006. This report provided information on autos, taxis, vans and trucks entering an existing the Manhattan CBD south of 60th Street on a typical weekday. The cordon data was grouped by the following four[1] sectors:

- 60th Street sector
- Brooklyn sector
- Queens sector, and
- New Jersey sector.

For each sector, entering and exiting volume data are provided for streets, avenues, bridges and tunnels, which cross the sector boundaries for 8-9 AM, 7-10 AM and daily. Stantec analyzed all three periods, but selected the 7-10 AM peak period as being most representative of the travel patterns being analyzed in the SEIS during the three analysis hours. For each cordon crossing point, Stantec estimated the portion of vehicles that would arrive in or depart from the primary study area via Route 9A, the Lincoln Tunnel, or cross the study area boundary on the north, east or south, as summarized in Table 9 by land use category.

TAXI

The taxi trip directional distribution was developed based upon data from The New York City Taxi Fact Book, Schaller Consulting, March 2006. This report provided percentage distributions taxi trips stratified as follows:

- Airports

[1] The Staten Island ferry no longer carries vehicles.

- Outer Boroughs
- Manhattan North of 96th Street
- Manhattan 60th to 96th Street – east side
- Manhattan 60th to 96th Street – west side
- Manhattan East Midtown
- Manhattan West Midtown
- Manhattan south of 30th Street – east side
- Manhattan south of 30th Street – west side

Stantec used the percentage distributions from the taxi fact book to directionally distribute entering and exiting taxi trips to the primary study area's north, east and south boundary crossing points or to Route 9A or the Lincoln Tunnel on the west periphery of the study area, as summarized below in Table 11.

Reference: 15 Penn Plaza Redevelopment Project
Transportation Planning Assumptions

Table 11
Trip Directional Distribution Summary
Primary Study Area

Land Use & Direction	Route 9A	Lincoln Tunnel	Crossing Study Area Boundary			Total
			North	East	South	
AUTO TRIPS[1]						
OFFICE						
Arrivals	15%	10%	25%	35%	15%	100%
Departures	15%	10%	20%	40%	15%	100%
RETAIL						
Arrivals	15%	5%	25%	40%	15%	100%
Departures	15%	5%	20%	45%	15%	100%
HOTEL						
Arrivals	20%	10%	15%	40%	15%	100%
Departures	20%	10%	15%	40%	15%	100%
RESIDENTIAL						
Arrivals	10%	5%	25%	45%	15%	100%
Departures	10%	5%	20%	50%	15%	100%
TAXI TRIPS[2]						
OFFICE						
Arrivals	10%	0%	35%	35%	20%	100%
Departures	10%	0%	35%	35%	20%	100%
RETAIL						
Arrivals	10%	0%	40%	30%	20%	100%
Departures	10%	0%	40%	30%	20%	100%
HOTEL						
Arrivals	15%	5%	30%	40%	10%	100%
Departures	15%	5%	30%	40%	10%	100%
RESIDENTIAL						
Arrivals	15%	5%	30%	40%	10%	100%
Departures	15%	5%	30%	40%	10%	100%

[1] Estimates developed by Stantec, based on Hub-Bound 2003 Travel Report, NYMTC, February 2006 and rounded to nearest 5%.

[2] Estimates developed by Stantec, based on The New York City Taxi Fact Book, Schaller Consulting, March 2006 and rounded to nearest 5%

TRUCKS

The truck trip directional distribution was developed based upon data from the 2006 New York City Bridge Traffic Volumes, prepared by the New York City Department of Transportation (NYCDOT) and released in August 2007. This report provided information on vehicle volumes on bridges and tunnels in New York City, including those operated by NYCDOT, MTA Bridges and Tunnels and

The Port Authority. For the purpose of developing a truck trip distribution for the primary study area, Stantec used traffic data by vehicle class for the East River, Harlem River and Hudson River crossings. Stantec used the truck volumes on selected bridges and tunnels to directionally distribute truck trips in the primary study area, as summarized in Table 12.

Table 12
Truck Trip Directional Distribution Summary
Primary Study Area

Direction & Time of Day	Directional Distribution				Total
	North	South	East	West	
INBOUND					
AM	47%	15%	20%	19%	100%
MD	41%	25%	16%	18%	100%
PM	56%	18%	12%	14%	100%
OUTBOUND					
AM	46%	16%	25%	13%	100%
MD	35%	18%	26%	21%	100%
PM	49%	10%	25%	16%	100%

Note: Estimates developed by Stantec, based upon 2006 New York City Bridge Traffic Volumes, NYCDOT and rounded to nearest 1%.

SUBWAY IMPROVEMENTS

The Proposed Project would relocate and significantly upgrade the existing subway entrances on West 32nd and West 33rd Streets and would undertake significant subway improvements, including the re-opening and refurbishing of the passageway under the south side of 33rd Street. The refurbished passageway would be widened to accommodate pedestrian flows between Penn Station/the Seventh Avenue subway lines (1, 2, and 3) and the Sixth Avenue subway lines (B, D, F, N, Q, R, V, and W) and the PATH station, improving pedestrian circulation on the street-level sidewalks. The passageway would provide an alternative to pedestrians traveling along the 33rd Street corridor. In addition, both scenarios would improve several subway stairways and control areas.

TRANSIT / PEDESTRIAN

The distribution of project-generated subway and commuter railroad trips (including NJ Transit, PATH, Metro North, and Long Island Rail Road) for each project component were based on survey data, Census data and consultations with New York City Transit. Tables 13 and 14 below summarize the transit line assignment assumptions.

Reference: 15 Penn Plaza Redevelopment Project
Transportation Planning Assumptions

Table 13
Subway and Railroad Trip Assignments

STATION	AM[1] (In)	AM[1] (Out)	AM[1] (Total)	PM[2] (In)	PM[2] (Out)	PM[2] (Total)
Eighth Avenue Line (A, C, E Routes)	1	222	223	182	80	262
Seventh Avenue Line (1, 2, 3 Routes)	2	591	593	486	215	701
Sixth Avenue Line (B, D, F, V Routes)	1	332	333	273	121	394
Broadway Line (N, Q, R, W Routes)	1	332	333	273	121	394
Total Subway Trips	**5**	**1,477**	**1,482**	**1,214**	**537**	**1,751**

STATION	AM[1] (In)	AM[1] (Out)	AM[1] (Total)	PM[2] (In)	PM[2] (Out)	PM[2] (Total)
Long Island Railroad	2	299	301	145	22	167
New Jersey Transit	2	409	411	199	30	229
Amtrak	0	39	39	19	3	22
PATH	0	39	39	19	3	22
Total Railroad Trips	**4**	**786**	**790**	**382**	**58**	**440**

Notes:
(1) Single Tenant Scenario
(2) Multi-Tenant Scenario

Project-generated bus trips focuses on the 10 routes located within 1/4-mile of the site, as it is on these routes that project trips would be most heavily concentrated. These routes include the M4, M5, M6, M7, M10, M11, M16, M20, M34, and Q32. Assignment of project increment bus trips to individual routes will be based on existing demand patterns and the relative proximity of each route to the proposed development site.

Table 14
Bus Line Trip Assignments

BUS LINE	AM[1] (In)	AM[1] (Out)	AM[1] (Total)	PM[2] (In)	PM[2] (Out)	PM[2] (Total)
M4	0	80	80	67	30	97
M5	0	20	20	17	7	24
M6	0	40	40	34	15	49
M7	0	40	40	34	15	49
M10	0	30	30	25	11	36
M11	0	0	0	0	0	0
M16	0	40	40	34	15	49
M20	0	30	30	25	11	36
M34	0	60	60	50	22	72
Q32	0	60	60	50	22	72
Total Bus Trips	**0**	**400**	**400**	**336**	**148**	**484**

Notes:
(1) Single Tenant Scenario
(2) Multi-Tenant Scenario

Pedestrians walking between off-site parking facilities and project sites were distributed in the general direction of the parking facilities where auto trips were assigned, as numerous off-site parking facilities exist in the study area. Walk-only trips (i.e., walk trips not associated with other travel modes) were widely dispersed among links between residential areas and commercial areas.

TRIP ASSIGNMENT

AUTO / TAXI

Auto and taxi trips will be assigned to the street network based upon the trip distribution patterns described above, the primary corridors providing access to the study area, and the development site origin or destination of the trip. The most direct routes were used to major access points, such as the West Side Highway (Route 9A), the Lincoln Tunnel, Manhattan avenues, the Queens-Midtown Tunnel and the FDR Drive. The auto trips were assigned to parking facilities with available parking spaces to maximum extent practical, as described above. Taxi

trips were assigned to the various project sites in accordance with the *CEQR Technical Manual*.

For future development without the Proposed Actions, auto and taxi trips assignments were based directly upon those used in the *Hudson Yards FGEIS*, where available and still applicable. Other projects were assigned to the street network by Stantec following the parameters outlined above. The assignments of auto and taxi (as well as truck) trips will take into account changes to the study area traffic network that are expected to occur by the 2014 Build year as a result of other development and initiatives by the City and other agencies.

TRUCK

Truck trips were assigned to designated local and through truck routes within the street network. These include but are not necessarily limited to Route 9A (south of 59th Street), Eighth, Ninth, Tenth, Eleventh and Dyer Avenues, and 30th, 31st and 34th Streets.

TRANSIT

Transit users were assigned to subway lines based on survey data and through consultations with New York City Transit. Trip assignments to uptown and downtown routes, as well as local and express routes, were based on existing count data and discussions with New York City Transit.

Users were assigned to subway stairways and control areas based on observed patterns and existing count data collected in the stations.

PEDESTRIAN

Sidewalk, corner area and crosswalk locations in the area bounded by West 34th Street on the north, 6th Avenue / Broadway on the east, West 31st Street on the south, and 8th Avenue on the west were analyzed. These locations were selected as they serve as key links between the project site and the surrounding street system, and/or would be used by concentrations of project-generated pedestrian demand linked to other modes (i.e., en route to subway stations, bus stops or off-site parking garages).

Pedestrian trips were assigned fairly evenly to sidewalks and intersections comprising the pedestrian network in accordance with the previously developed pedestrian distribution patterns, described above.

PARKING

PARKING DEMAND

Parking demand from new office and retail space will be derived from the forecasts of daily auto trips for these uses. To accommodate projected parking

demand, it is anticipated that the Proposed Project could provide up to a maximum of 100 accessory parking spaces permitted by zoning.

The analysis of off-street parking will therefore examine conditions at public off-street parking facilities within a 1/4-mile radius of the development site. On-street parking regulations have been collected within 1/4-mile of the development sites. Stantec observed that legal on-street spaces are essentially fully occupied. Therefore, the SEIS will assume that the on-street parking is fully occupied.

ASSIGNMENT OF PARKING DEMAND

For the identified development sites without the proposed action, the parking accumulation for each site has been calculated based upon its daily parking demand and the arrival and departure temporal distributions for the mix of land uses on the site. The temporal distributions were obtained from Appendix S-1 of the *Hudson Yards Rezoning and Development Program FGEIS* and included office, hotel, residential, local retail, destination retail and light manufacturing uses, etc. Each site's calculated peak parking accumulation was allocated to nearby parking facilities, based upon their available capacities during the appropriate peak accumulation period, typically midday for commercial uses and overnight for residential uses.

CAPACITY ANALYSIS ASSUMPTIONS

STREET INTERSECTION

For the street intersection capacity analysis, Stantec will use Highway Capacity Software (HCS) 2000, Version 4.1f. The specific assumptions are as follows:

- *Traffic Volumes* – The Existing conditions traffic volumes would be balanced. All sinks and sources actually used in the balancing of the Existing condition networks would be identified. Sinks and sources used in the No Build and Build condition networks would also be identified.
- *Illegal Turns* – Illegal turn volumes will be removed as part of balancing the Existing condition traffic volumes. In addition, No Build and Build trips will not be assigned to make any illegal turns.
- *Physical Inventories* – Intersection physical inventories will be provided in order to verify the bus stops, bike lanes, street width, number of observed moving lanes and any other physical characteristics that affect the HCS analysis.
- *Lane Widths and Configurations* – Lane widths and configurations initially assumed in the traffic analysis were based on a combination of Hudson Yards data and project field data. Where lane widths are not based on recent field data (2006 or later), field observations were made to ensure that the lane configurations have not changed, and if necessary lane width measurements were redone. As a general rule, lane width assumptions are not to be used.

At high volume intersection approaches, it was sometimes observed that the approach was operating with a defacto "turning pocket", similar to daylighting. In those cases, a turning pocket was included in the HCS analysis during the affected analysis hour(s), as noted in the footnotes in the capacity and LOS analysis tables.

- *Area Type* – The "CBD" area type is used for all intersections, including those on Route 9A. (The *Hudson Yards Rezoning and Development Program FGEIS* had assumed "Non-CBD" area type for Route 9A.) If reasonable adjustments to other factors can not lower the v/c ratio to 1.05 or less, the issue will be discussed with NYCDOT before changing the area type.
- *Right Turn on Red* – Not permitted.
- *Peak Hour Factor* – A peak hour factor of 0.95 is used for all movements, at all locations, and during all peak hours.[2]
- *Base Saturation Flow Rate* – 1,900 passenger cars per hour per lane.
- *Heavy Vehicle Percentages* – based on *Atlantic Yards FEIS* truck percentages and Stantec's sample vehicle classification counts.
- *Upstream Filtering/Metering Adjustment* – The intersections are analyzed as isolated intersections, where this adjustment factor equals 1.
- *Conflicting Pedestrians* – Pedestrian count data has been collected at 29 intersections within and around the Special Moynihan Station District and that field data will be used for the number of conflicting pedestrians in the traffic capacity analyses. The intersections within this district encompass a full-range of pedestrian activity in the West Midtown area. Based upon these count data and field observations, including sample counts as appropriate, Stantec will estimate the number of conflicting pedestrians for the remaining areas in the study area. For manufacturing areas located on the far west side, the numbers of conflicting pedestrians are based on field observations. A listing of analysis intersections, where estimates of conflicting pedestrians are used, will be complied and submitted to NYCDOT for their approval.
- *Arrival Type (AT)* – One-way avenues would use AT-4 during peak periods. Cross-streets and other minor streets would use AT-3 throughout the day.
- *Bus Blockages* – It was agreed with NYCDOT that bus blockages would be addressed where there is a near-side bus stop (far-side bus stops will not be analyzed). The number of bus blockages per hour would be based upon the cumulative number of buses per hour furnished by New York City Transit for the surface transit peak load point analysis. For avenues or streets located beyond the primary transit study area, the number of bus blockages per hour would be based on published bus schedule information on the MTA Web-site. On heavily used transit corridors, such as Madison and Fifth Avenues, there are often two or three designated bus stops on some blocks. Only bus routes designated to use the near side bus stops will be included in the number of

[2] PHF of 0.95 was used in the *Hudson Yards FGEIS* for Existing, No Build and Build conditions. A few locations in the *Hudson Yards FGEIS* used a PHF of 0.96 or 0.97.

bus blockages per hour in the HCS analyses. All buses are accounted for in the heavy vehicle percentages, regardless of the presence of bus stops.

- *Adjacent Parking Lane* – This information is based on the existing parking regulations inventory, as the initial assumption, and field observations as a supplement, which may vary by analysis hour, depending on curbside parking regulations and motorist's behavior.
- *No Standing / No Parking Regulations* – Where illegal standing or parking is commonly observed on streets or avenues with posted No Standing/No Parking regulations, it was agreed with NYCDOT that HCS analysis would select the "adjacent parking lane with zero (0) parking maneuvers" option. This would result in a parking adjustment factor slightly less than 1.00. Where the No Standing / No Parking regulations are typically obeyed, the HCS analysis would select the "no adjacent parking" option.
- *Parking Maneuvers* – Default values of 5 and 10 parking maneuvers per hour has been used for residential areas and commercial areas, as suggested by NYCDOT in coordination with the *Western Rail Yards DEIS*.
- *Signal Timing/Phasing* – Official NYCDOT 2006 traffic signal timing/phasing plans will be used for the 2006 Existing Conditions. Notable traffic signal phasing/timing differences from official timing/phasing observed in the field will be brought to NYCDOT's attention for concurrence before changes are made. For the No Build conditions, the 2007 or most current official signal timing/phasing would be used and then mitigation signal timing/phasing from approved EISs would be applied, if still needed. Regarding previously approved mitigation measures, the general rule is not to make changes that would result in conditions worse than they would have been, if the most current official signal timing/phasing were used. The Build condition analyses will use the same traffic signal timing/phasing as the No Build condition.
- *Bicycle Lanes* – Existing bicycle lanes within the traffic study area will be included in the capacity and level of service analyses and shown on all schematics where mitigation is proposed. The proposed bicycle lanes in NYCDOT's Bikeway Master Plan for Manhattan include both Type 1 (physical buffer) and Type 2 (pavement markings) bicycle lanes. While it is expected that these bicycle lane proposals would be in place in both the 2013 and 2020 analysis years, details of proposed bicycle lanes will not be available until August 2008 at the earliest. Therefore, NYCDOT directed that only the two bicycle lane proposed for implementation in FY 2009 be included in the future No Build condition. For Type 1 bicycle lanes, a reduction of one (1) effective moving lane would be made. For a Type 2 bicycle lane, the width of the bicycle lane would be deducted from the net approach width after deducting the parking lane(s).
- *Pedestrian Walking Speed* – The traffic analyses will use the same walking speed assumptions as the Pedestrian analyses, as described below.
- *Adjustment to Analysis Factors* – Adjustments often need to be made to analysis factors to reduce high v/c rations in the Existing conditions to 1.05. The Existing condition's capacity and level of service summary table in SEIS

Reference: 15 Penn Plaza Redevelopment Project
Transportation Planning Assumptions

Chapter 16 – Traffic and Parking, includes a notes column, where the Stantec documented the adjustments that were made to the analysis factors, so as to lower the v/c ratio for a particular lane group to 1.05. Details are available in the HCS analysis sheets. [If additional documentation is needed by NYCDOT, it was agreed that the Stantec would provide it in a technical memo.]

- Input parameters would be carefully reviewed based upon field observations before adjustments are made to the Analysis Factors.
- Adjustment factors that result in a linear proportioning of capacity and remain constant in future years can be modified to bring v/c ratio down, so long as those adjustments reflect observed field conditions. The order in which changes would be made to Analysis Factors are as follows:
  - Reductions in the number of parking maneuvers per hour and/or the percentage of heavy vehicle factor; would be based on actual field verified information;
  - Reducing the I-factor would have little effect on reducing the v/c ratio, but reductions in this factor could be used to reduce D2 component of Control Delay, if the changes reflect observed field conditions;
  - Increase ideal saturation flow rate. The maximum allowable rate without justification is 2,050 pcphgpl;
  - Increase the lane utilization factor (fLU);
  - Increase the percentage of left-turns using the protected portion of a protected-plus-permitted phase;
  - Extension of effective green to a maximum of 3 seconds;
  - Increase the percent of lef-turning vehicles using a designated left + thru shared lane;
  - Adjustments to the peak hour factor (PHF) would not be made, because the PHF is already 0.95.
- Adjustments would be applied to the left-turn and right-turn factors only as a last resort, because they are calculated based upon other input parameters. In addition, because the left and right turn factors vary depending on competing volumes and other parameters in the future year, they need be adjusted in the future analysis years based upon the percentage adjustment made to the Existing conditions, so that these factors remain consistent for all scenarios. The reason for this future year percentage adjustment is illustrated in the example shown in Appendix D, Table D-1.
- An effort would be made not adjust more than 2 or 3 factors, as multiple adjustments raise flags.
- Adjustments to factors, including the lane utilization factor and ideal saturation flow rate, would only be applied to the particular lane group during the analysis hours where the Existing conditions v/c ratio had been greater than 1.05. If the other lane groups or analysis hours do

not require adjustments to lower the v/c ratio, then the standard values, as cited above would be used.
- If the above adjustments to analysis factors, including adjustments to the left-turn and right-turn factors, cannot reduce the Existing Conditions v/c ratio to 1.05, an increase in the base saturation flow rate would be tested up to a maximum of 2,100 vph and the results would be reported to NYCDOT in a brief memo, before this step would be formally submitted.
- Modified factors will be carried through to the No-Build and Build scenarios for the affected analysis hours.

TRANSIT

For transit analysis, Stantec will follow the *CEQR Technical Manual*. The specific assumptions are as follows:

- *NYC Transit Station Planning and Design Guidelines* will be used to provide effective widths, processing rates and design capacities for subway station elements. Level-of-service guidelines from the *CEQR Technical Manual* will be used to analyze the following station elements:
  - Turnstiles
  - Gates
  - Stairs
  - Passageways
  - Escalators – capacities for escalators were supplied by NYC Transit – 75 persons per minute (LOS E) for a standard 40-inch escalator (with lower capacities for narrower widths).
- *Subway Line Haul Capacities* – The line haul capacities and existing peak load point volumes will be supplied by NYC Transit.
- *Bus Capacities* – Bus capacities by type were supplied by NYC Transit:
  - Standard (40') bus – 65 people.
  - Articulated (60') bus – 93 people.
  - Express (45') bus – 57 people.

PEDESTRIAN

For pedestrian analysis, Stantec will follow the *Highway Capacity Manual 2000*. The specific assumptions are as follows:

- *Pedestrian Routing* – Hand assignments for all No Build projects and the proposed action compiled by Stantec to be reviewed by DOT and DCP
- *Pedestrian Walking Speed* – A default walking speed of 4.0 feet/second will be used, except as noted below. NYCDOT is in the process of designating Senior Areas throughout the City. It is expected that a Senior Area would eventually be designated in Chelsea, a neighborhood encompassing both the pedestrian and traffic study areas. For the SEIS, the lower pedestrian walking speed (3.0

feet/second) would not be applied as blanket change over this entire proposed senior area, which is still under study at NYCDOT. Instead, the lower walking speed would be used at designated school crosswalks and other crosswalks adjacent to daycare centers, hospitals, senior citizen centers/homes and/or parks (where the elderly congregate). Mapped information available on City Planning's Web-site will be used to identify the locations of these community facilities within the pedestrian and traffic study areas. For those identified intersections, the "Don't Walk Interval" would first be adjusted to correspond to a walking speed of 3 feet/second. If the remaining "Walk" indication was over the minimum interval, then no further adjustment would be applied. However, should the "Walk" indication time fall below the minimum interval, then the timing splits would be changed, so that there would be a minimum "Walk" interval and "Don't Walk" interval, based on the walking speed of 3 feet/second.

- *Sidewalk and Corner Measurements* – The effective width between permanent obstructions will be used for sidewalk analyses in accordance with HCM 2000. For corner analyses, the actual sidewalk widths will be used for area calculations minus corner obstructions, including newsstands, trash cans, etc.
- *Pedestrians Overflowing Sidewalks* – In the Herald/Greeley Square area of the study area, pedestrians are sometimes observed to walk in the street, because the pedestrian volumes are high. These pedestrian movements are included in the analyzed pedestrian volume within the effective width of the adjacent sidewalk. At other locations in the Herald/Greeley Square area, such as between 33rd and 34th Streets along both Sixth Avenue and Broadway, the curb lane of the street has been dedicated for use by pedestrians as an extension of the sidewalk. Planters are placed at the outer edge of the curb lane to separate the pedestrians from the vehicles. Again, these pedestrian movements would be included in the analyzed pedestrian volume, but the effective width of the dedicated pedestrian space in the street would be added to the effective width of the adjacent sidewalk.
- *Signal Timing/Phasing* – The same signal timing and phasing assumptions will be used as described above under the traffic analysis.
- *Conflicting Vehicles Assumptions* – Standard default values are used except as noted:
    - Average clearance time per vehicle – a default value of 5 seconds per vehicle.
    - Average vehicle sweep path – a default value of 8 feet.
    - Corner Radii – based upon collected field data.

Reference: 15 Penn Plaza Redevelopment Project
Transportation Planning Assumptions

Stantec Consulting Services Inc.

Steve Abendschein, PE
Associate
steven.abendschein@stantec.com

APPENDIX C.2
Traffic Volumes

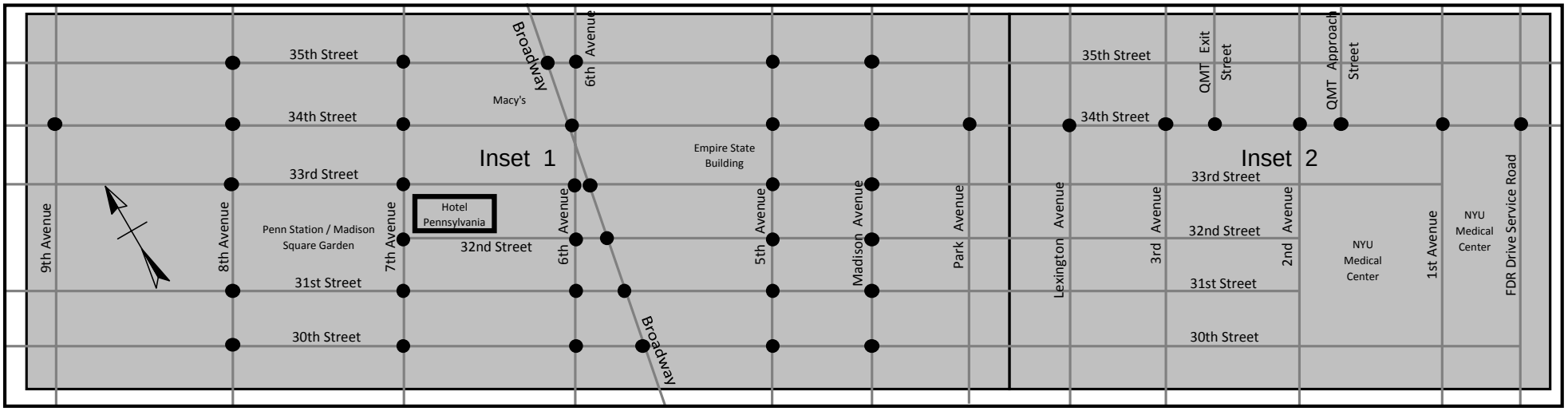

15 PENN PLAZA

Traffic Volumes : Key Map

Figure C-1

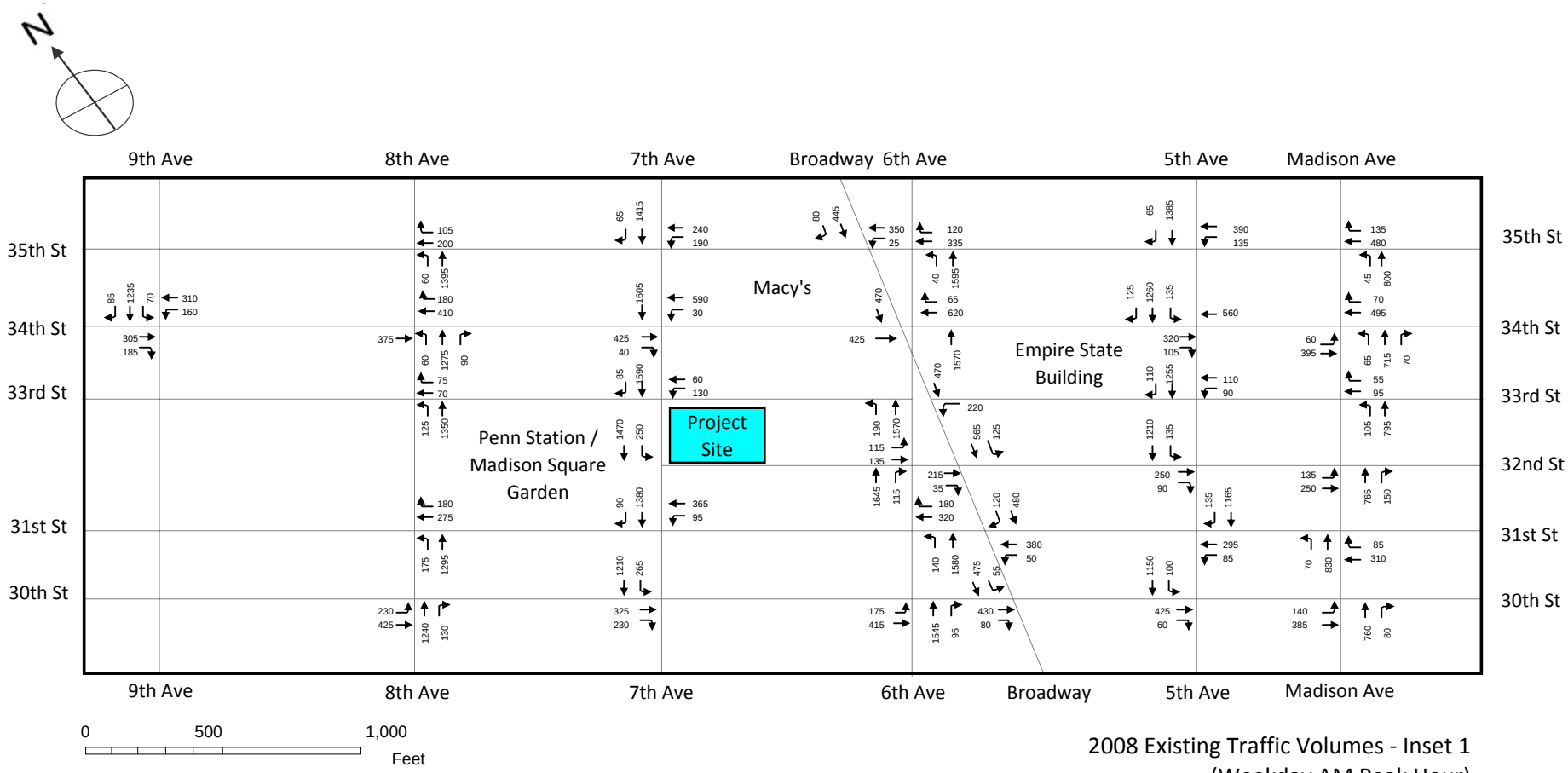

2008 Existing Traffic Volumes - Inset 1
(Weekday AM Peak Hour)

15 PENN PLAZA

Figure C-2

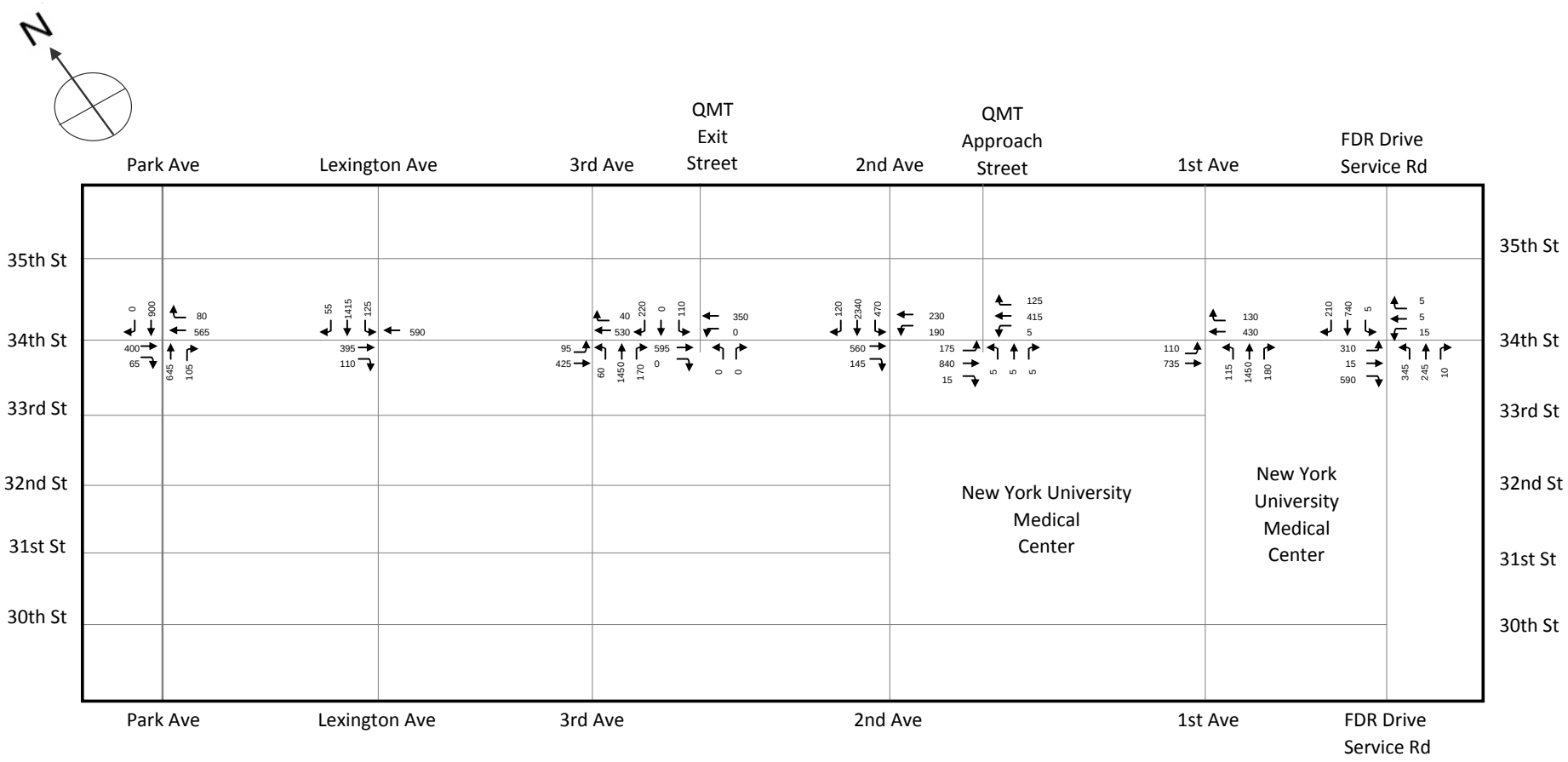

2008 Existing Traffic Volumes - Inset 2
(Weekday AM Peak Hour)

15 PENN PLAZA

Figure C-3

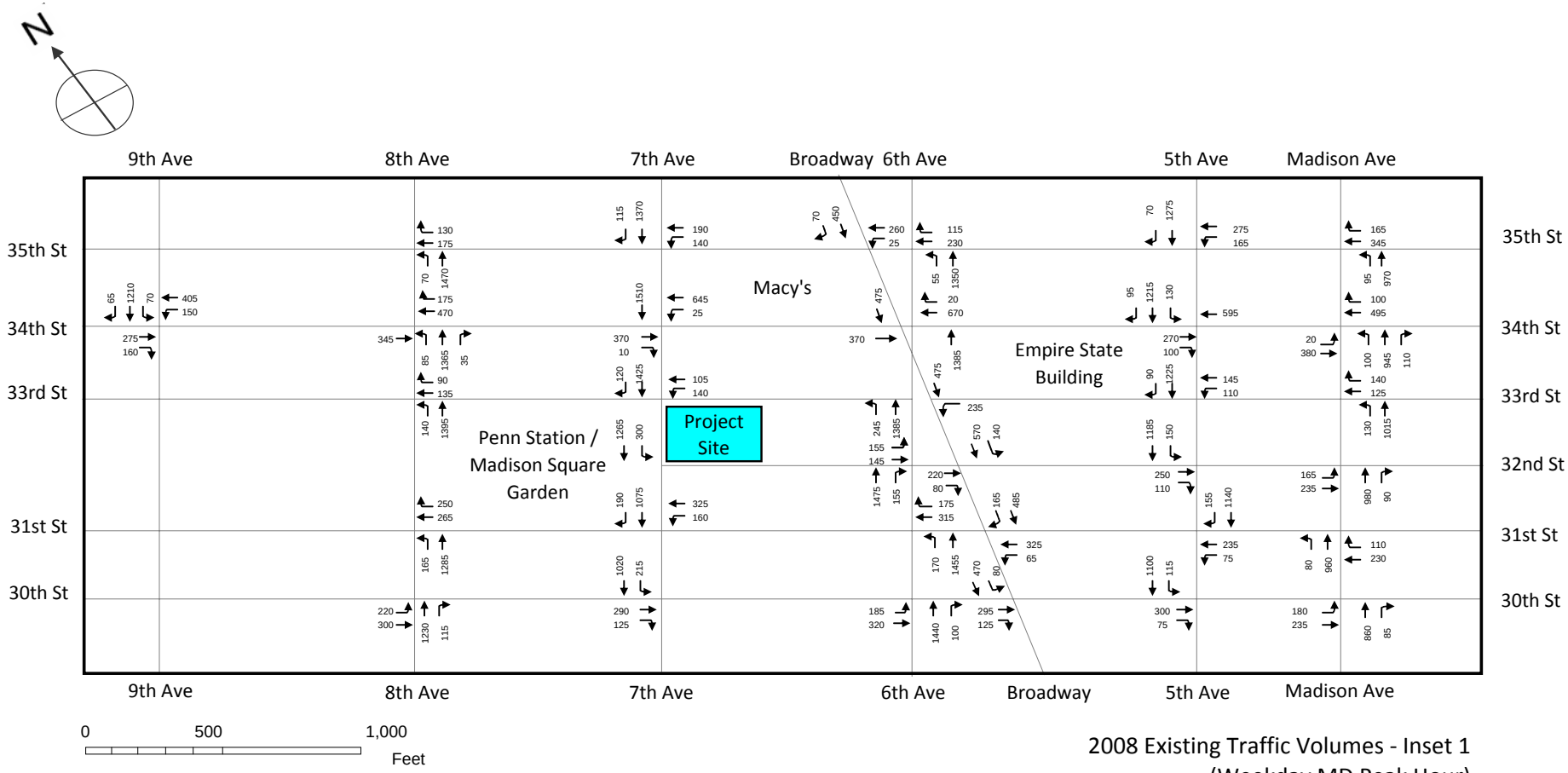

2008 Existing Traffic Volumes - Inset 1
(Weekday MD Peak Hour)

15 PENN PLAZA

Figure C-4

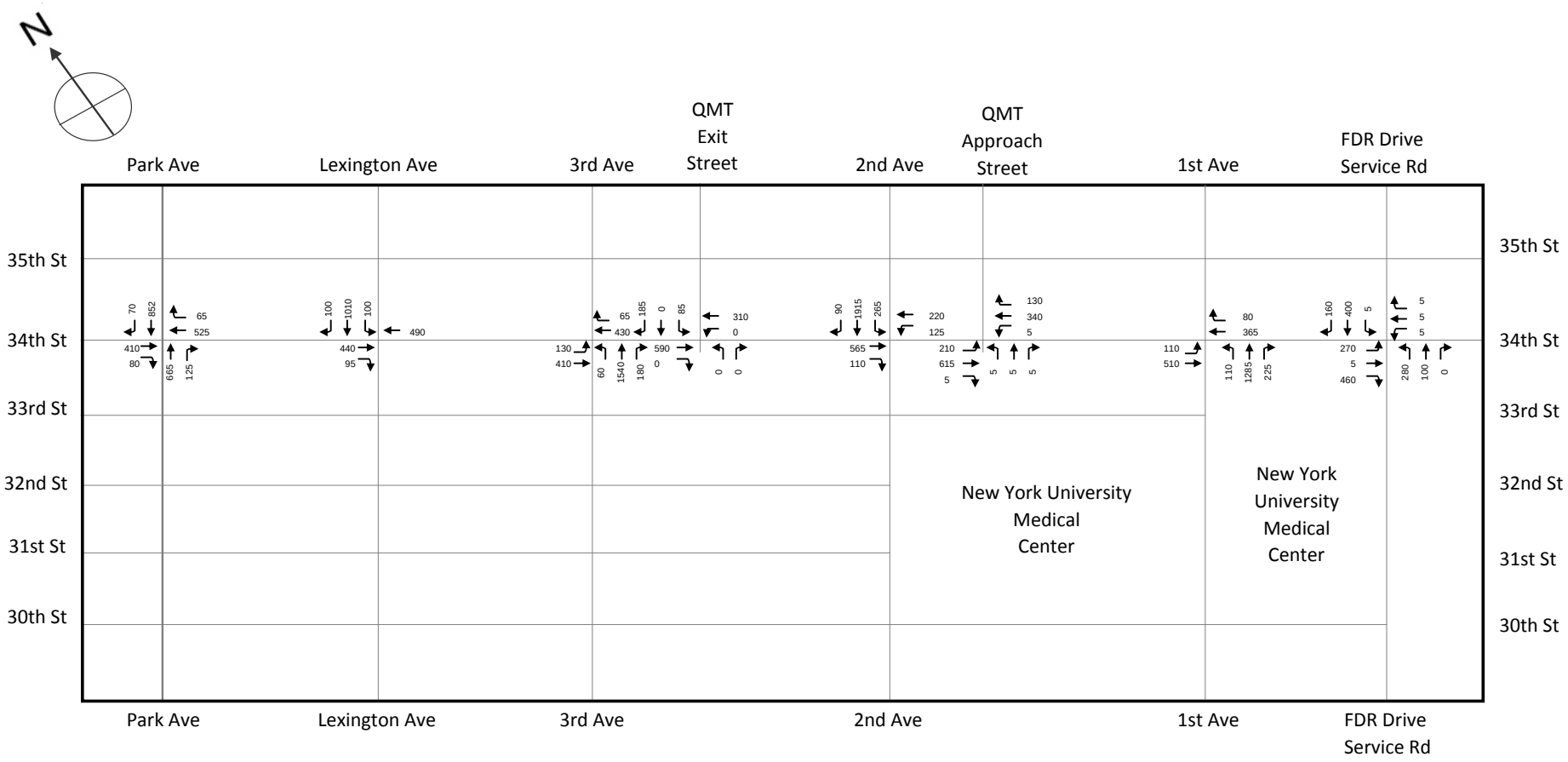

2008 Existing Traffic Volumes - Inset 2
(Weekday MD Peak Hour)

15 PENN PLAZA

Figure C-5

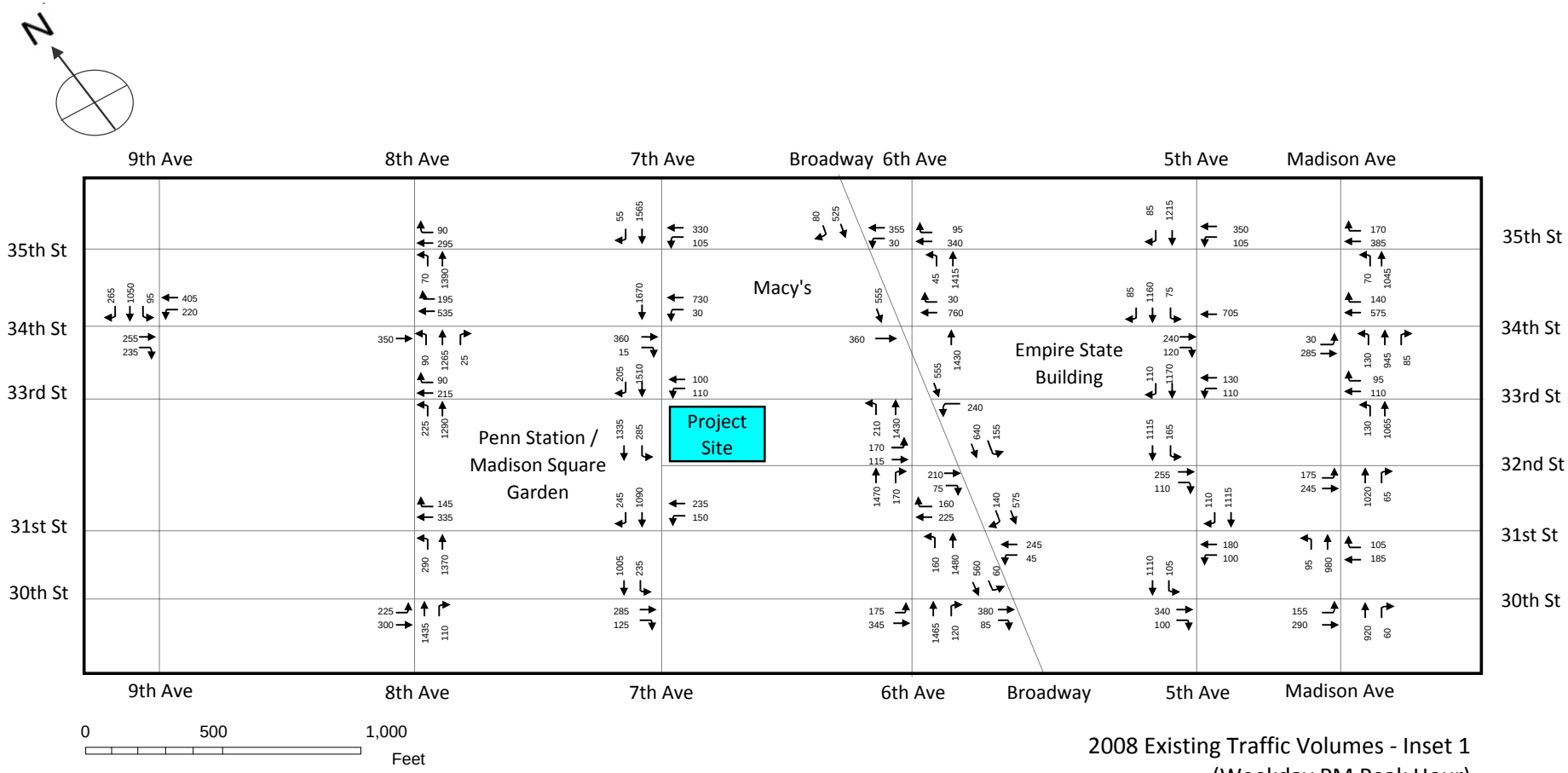

2008 Existing Traffic Volumes - Inset 1
(Weekday PM Peak Hour)

15 PENN PLAZA

Figure C-6

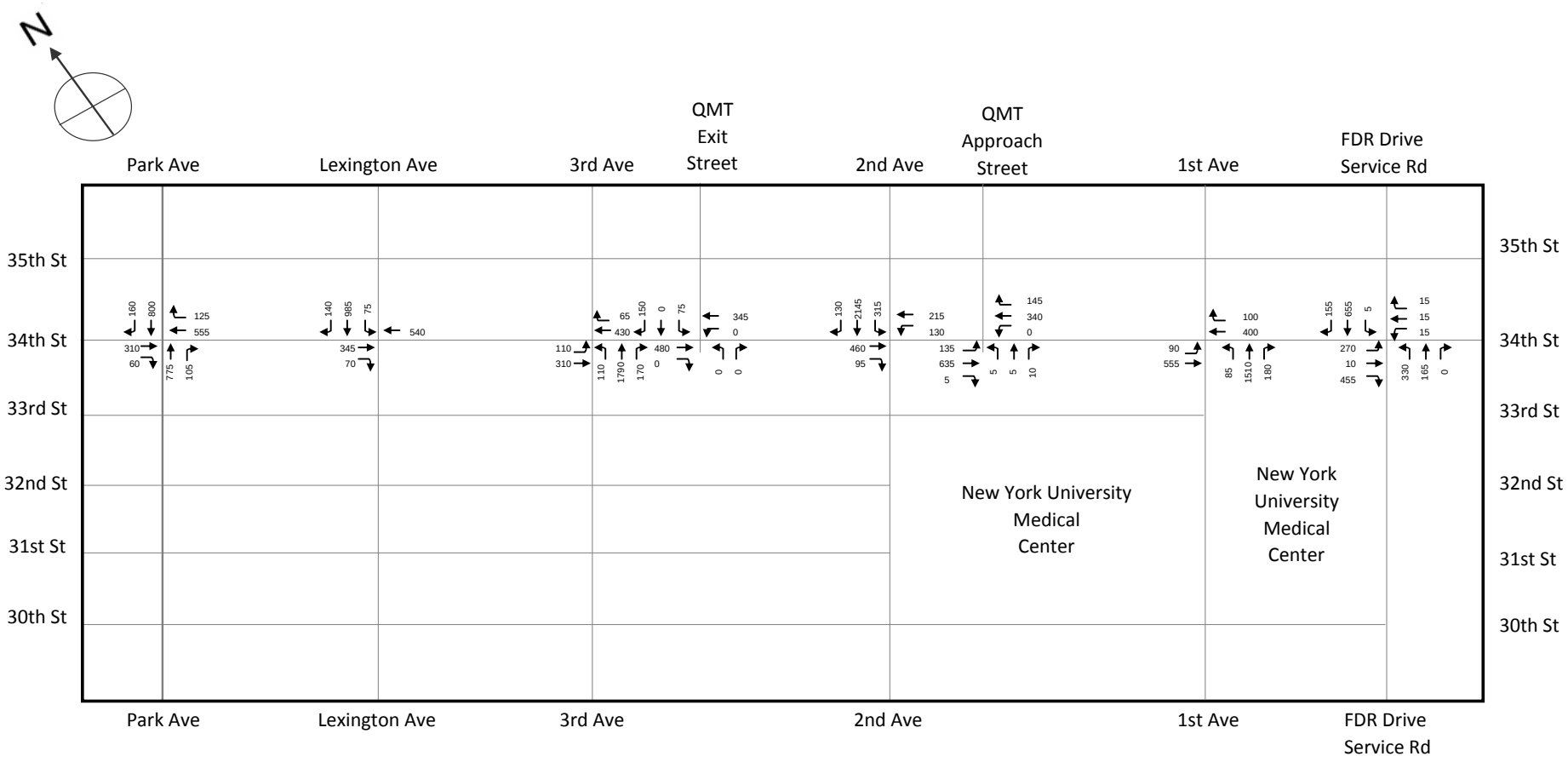

2008 Existing Traffic Volumes - Inset 2
(Weekday PM Peak Hour)

15 PENN PLAZA

Figure C-7

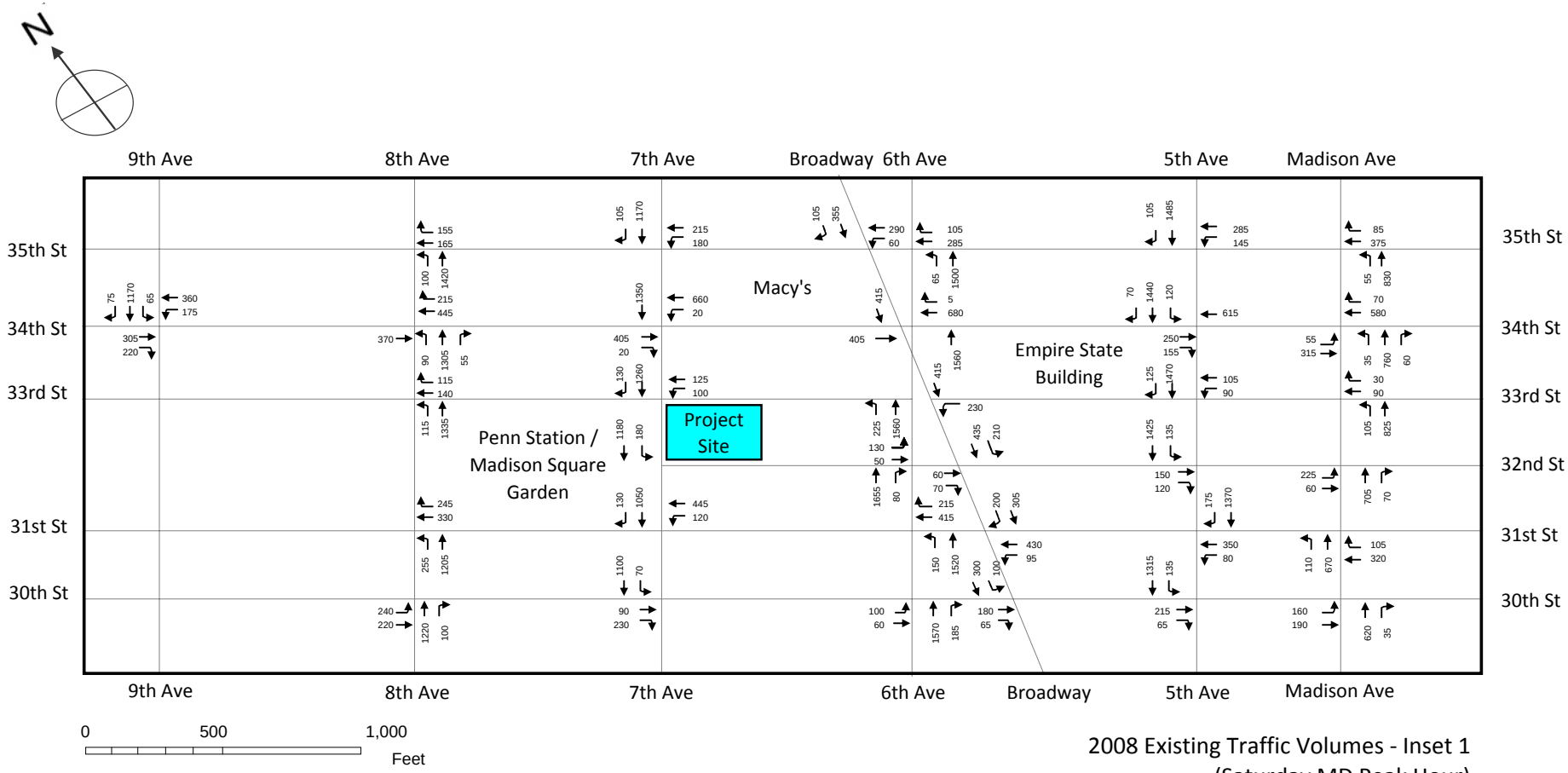

2008 Existing Traffic Volumes - Inset 1
(Saturday MD Peak Hour)

15 PENN PLAZA

Figure C-8

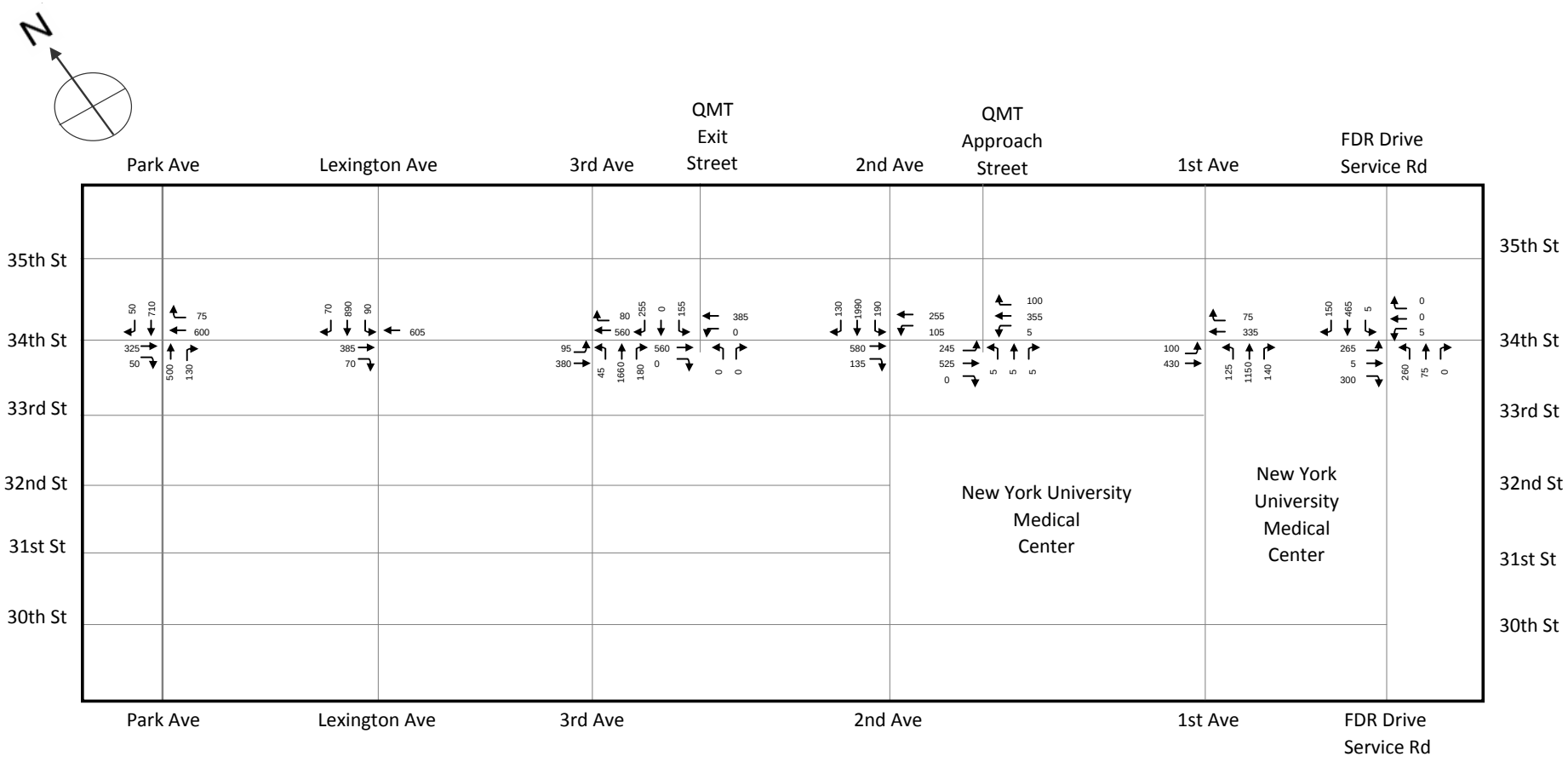

2008 Existing Traffic Volumes - Inset 2
(Saturday MD Peak Hour)

15 PENN PLAZA

Figure C-9

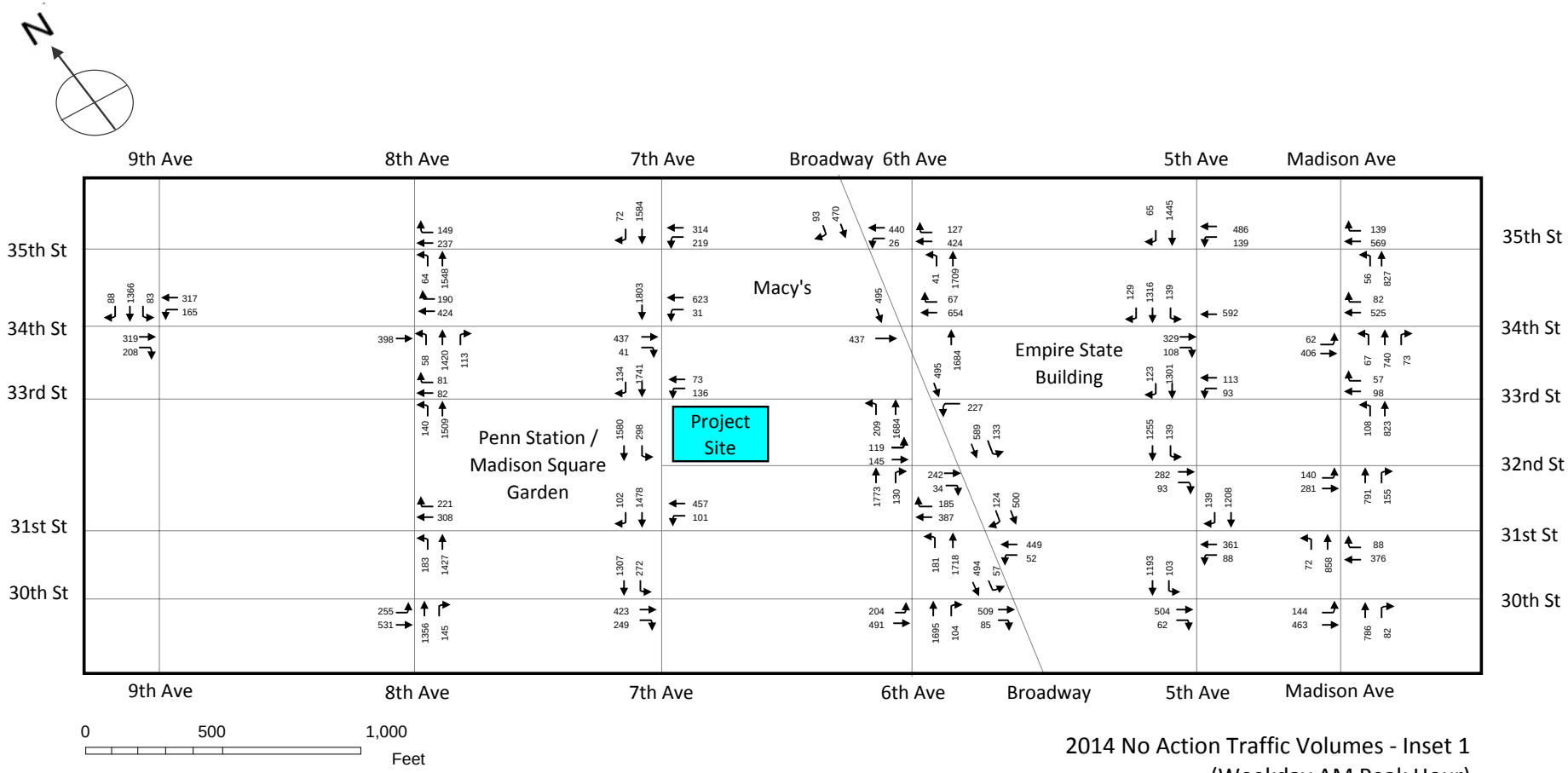

2014 No Action Traffic Volumes - Inset 1
(Weekday AM Peak Hour)

15 PENN PLAZA

Figure C-10

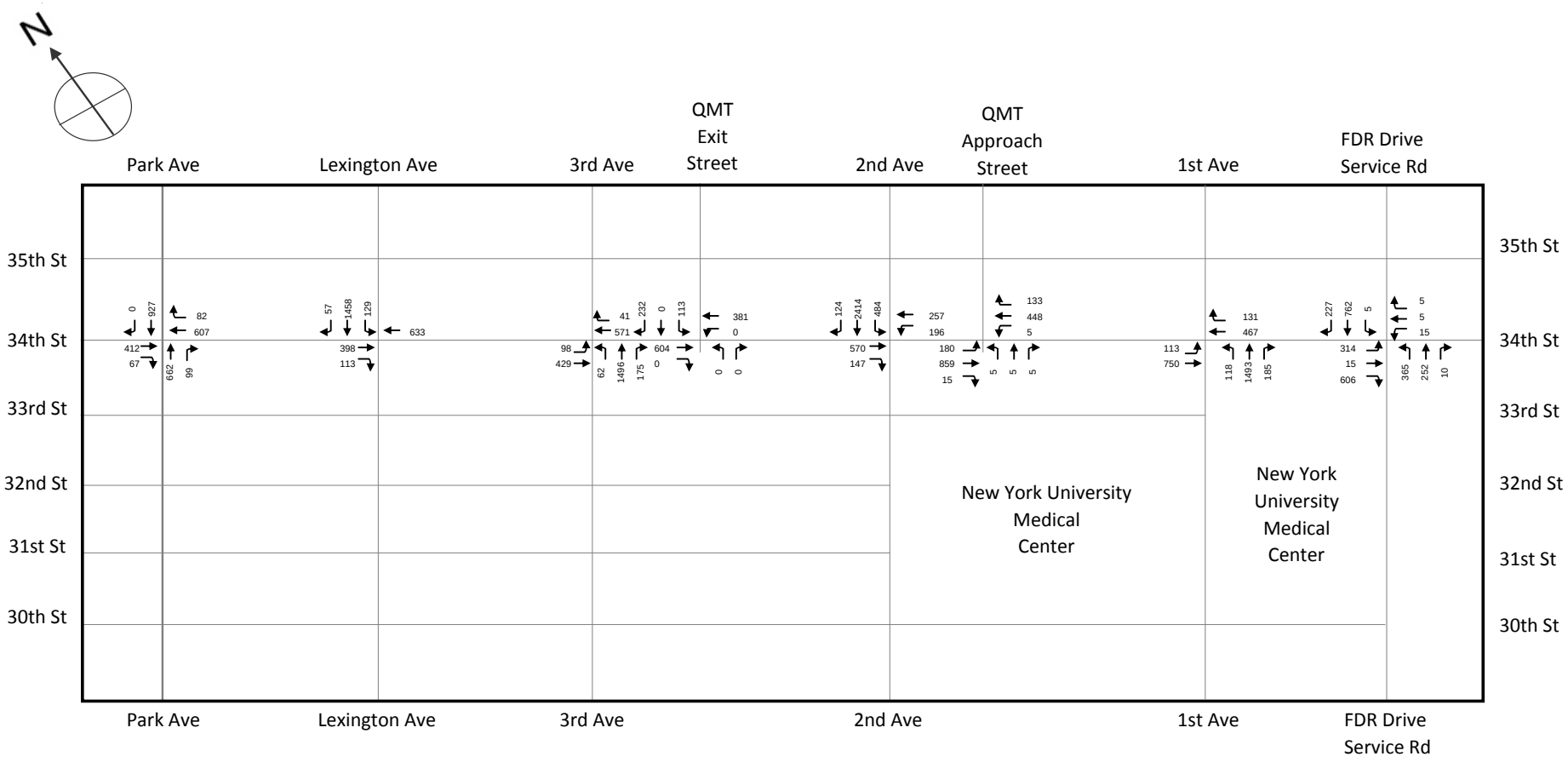

2014 No Action Traffic Volumes - Inset 2
(Weekday AM Peak Hour)

15 PENN PLAZA

Figure C-11

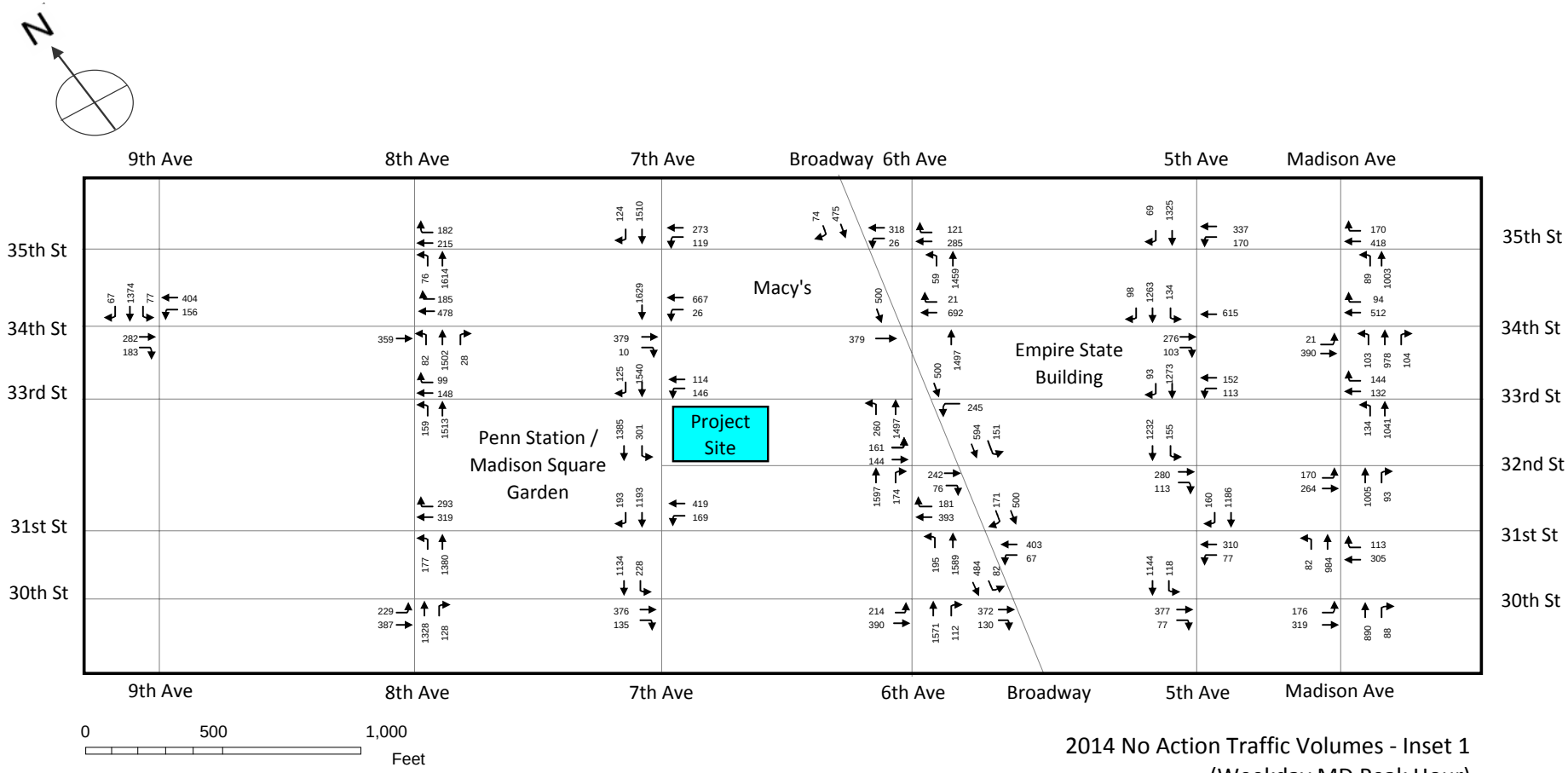

2014 No Action Traffic Volumes - Inset 1
(Weekday MD Peak Hour)

15 PENN PLAZA

Figure C-12

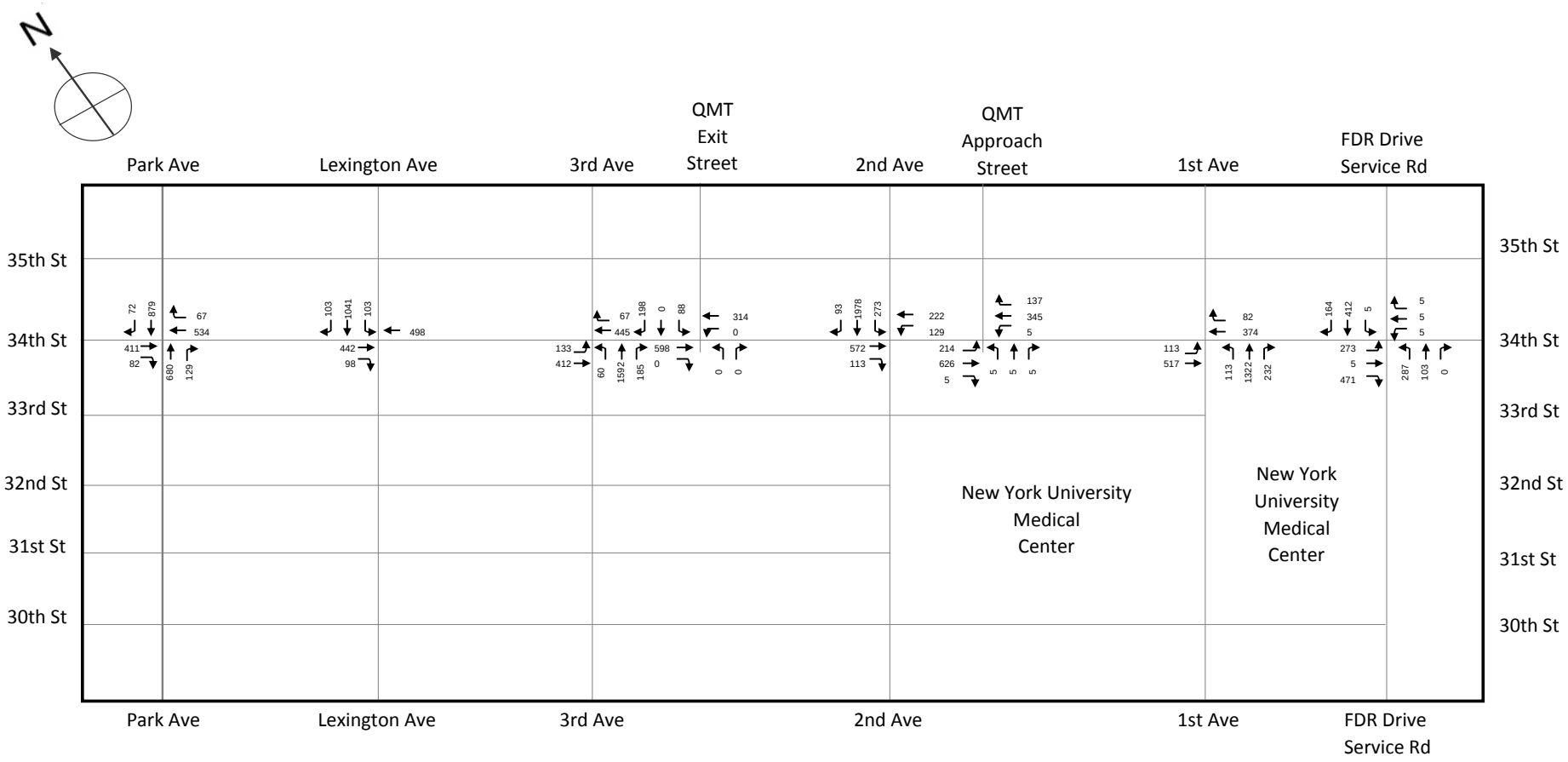

2014 No Action Traffic Volumes - Inset 2
(Weekday MD Peak Hour)

15 PENN PLAZA

Figure C-13

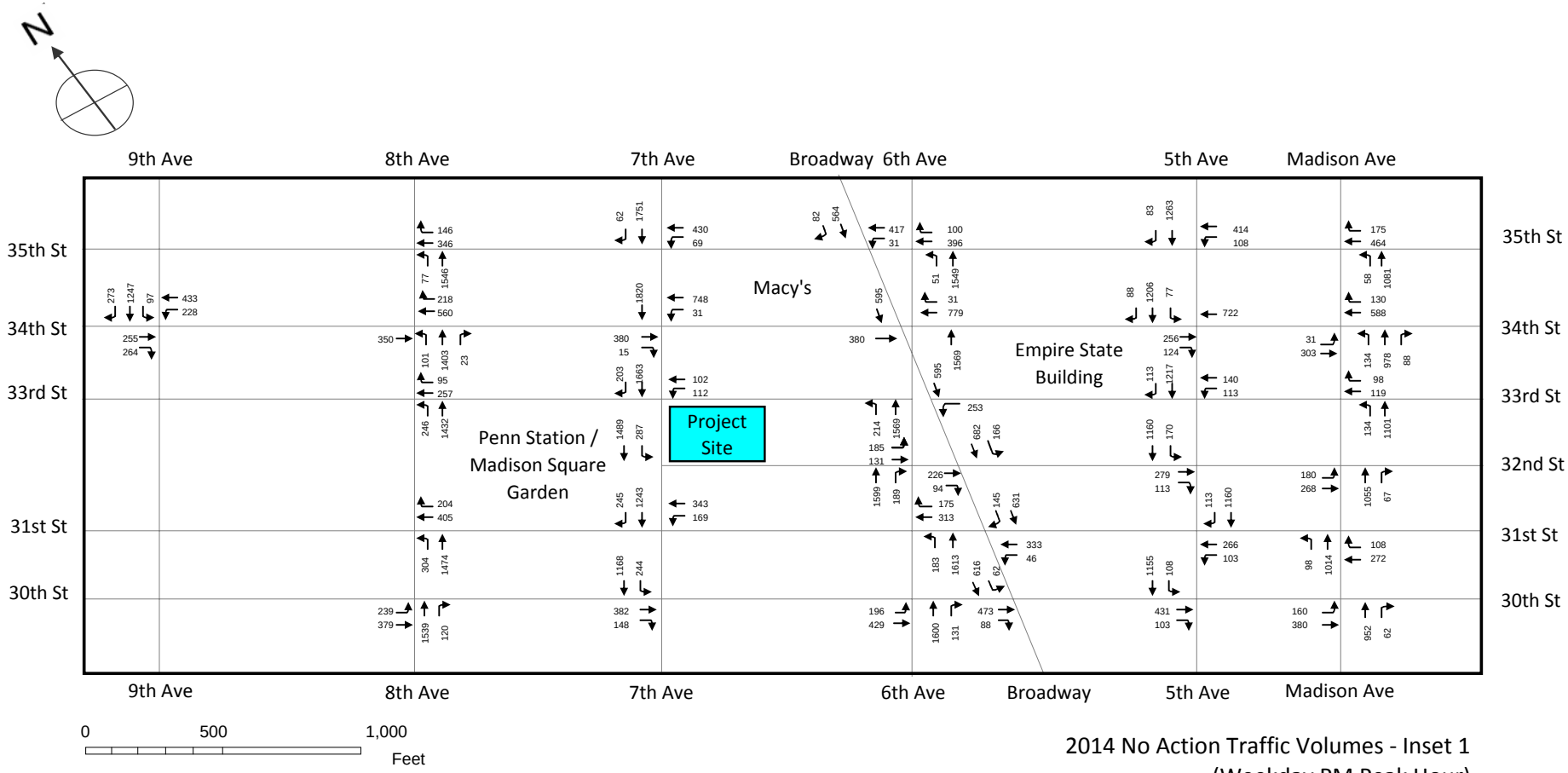

2014 No Action Traffic Volumes - Inset 1
(Weekday PM Peak Hour)

15 PENN PLAZA

Figure C-14

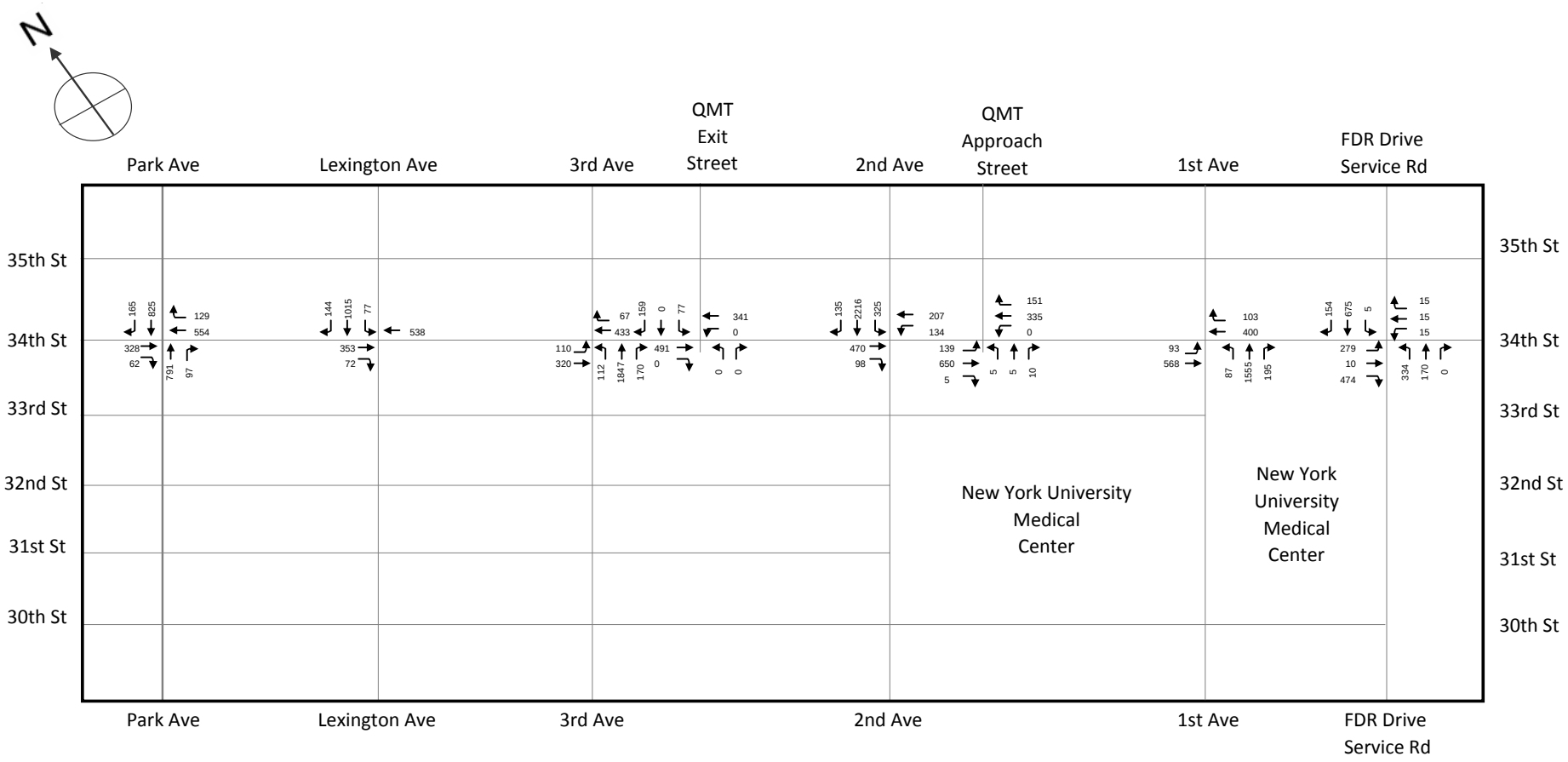

2014 No Action Traffic Volumes - Inset 2
(Weekday PM Peak Hour)

15 PENN PLAZA

Figure C-15

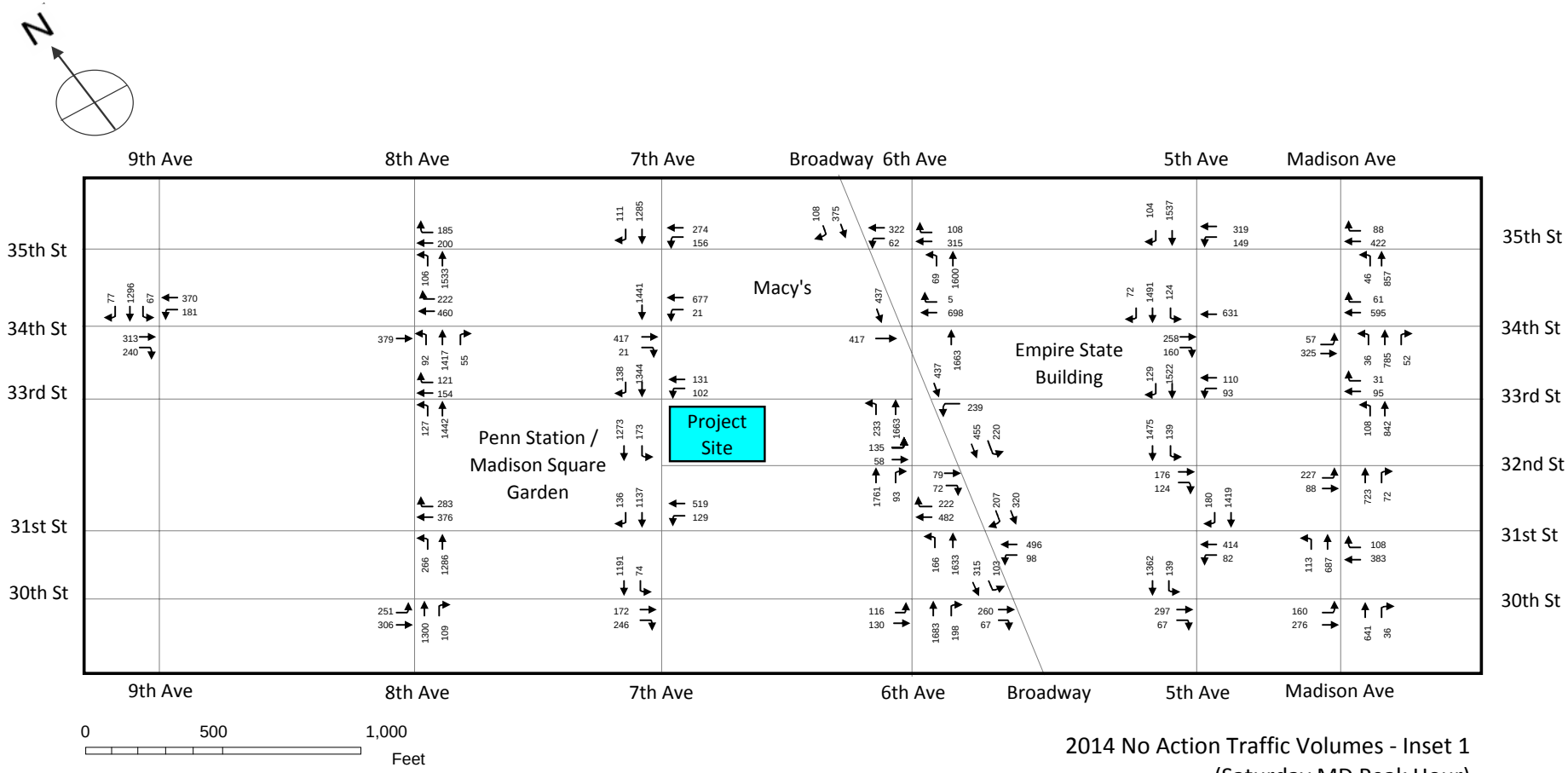

2014 No Action Traffic Volumes - Inset 1
(Saturday MD Peak Hour)

15 PENN PLAZA

Figure C-16

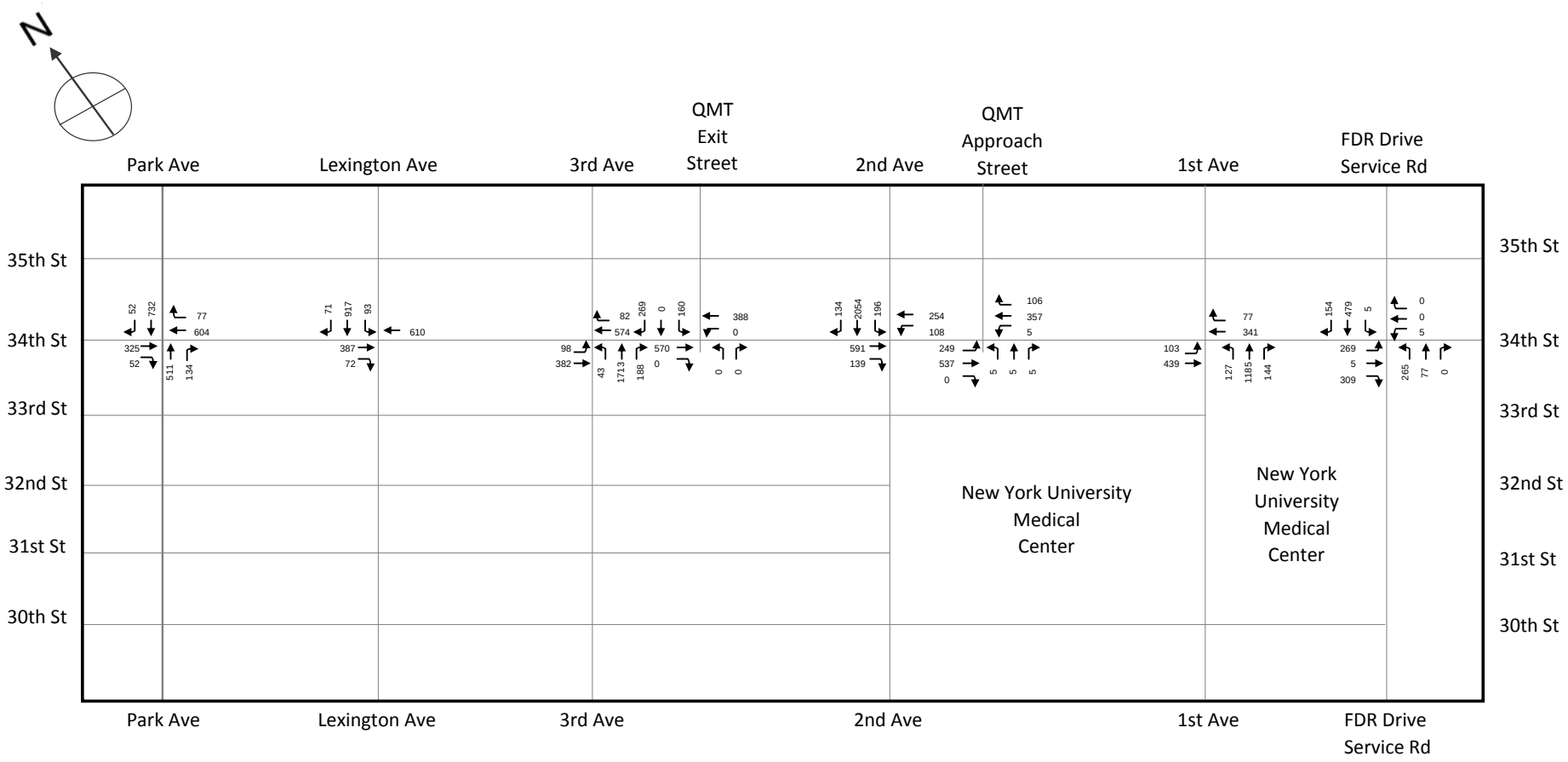

2014 No Action Traffic Volumes - Inset 2
(Saturday MD Peak Hour)

15 PENN PLAZA

Figure C-17

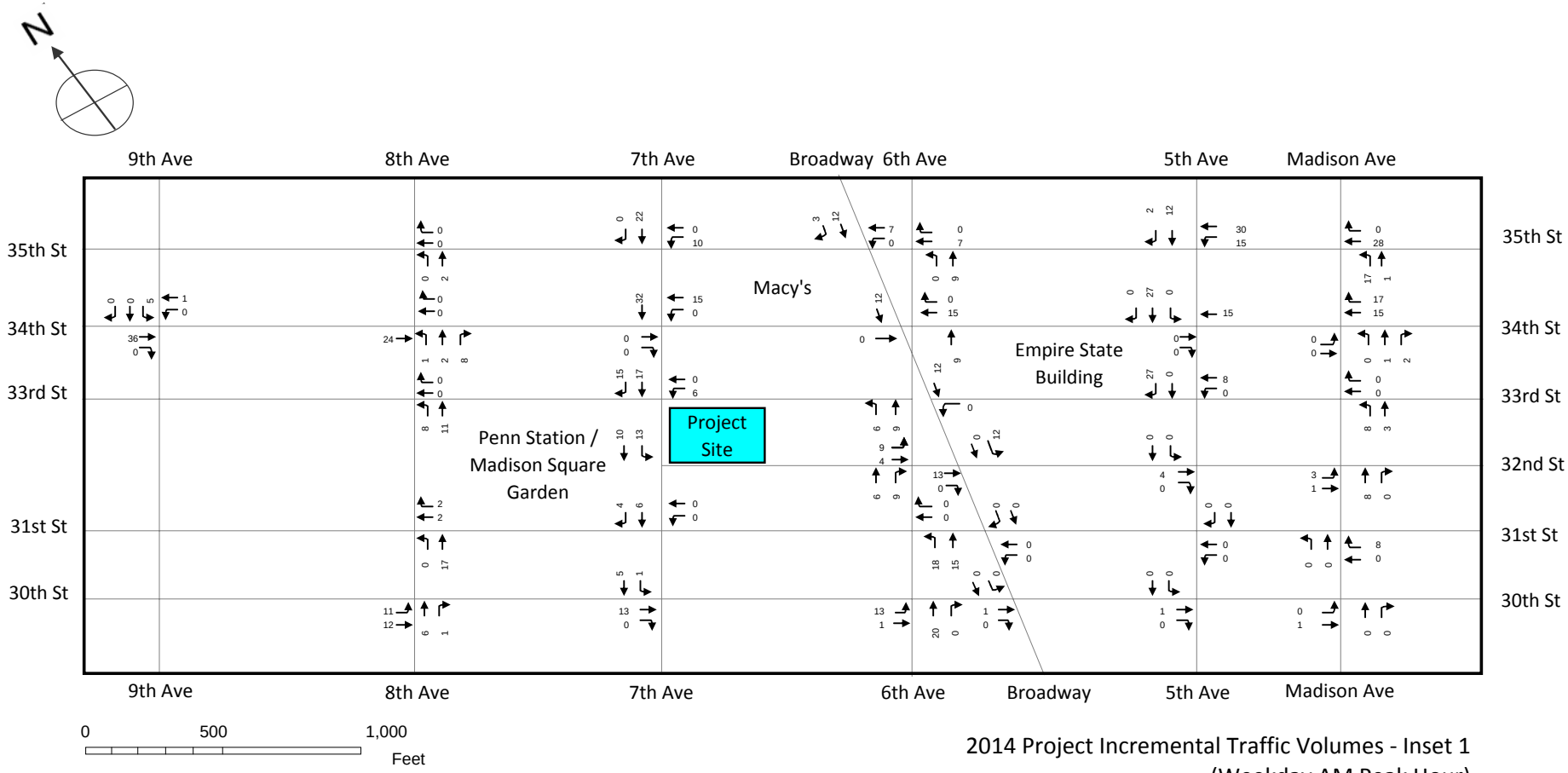

2014 Project Incremental Traffic Volumes - Inset 1
(Weekday AM Peak Hour)

15 PENN PLAZA

Figure C-18

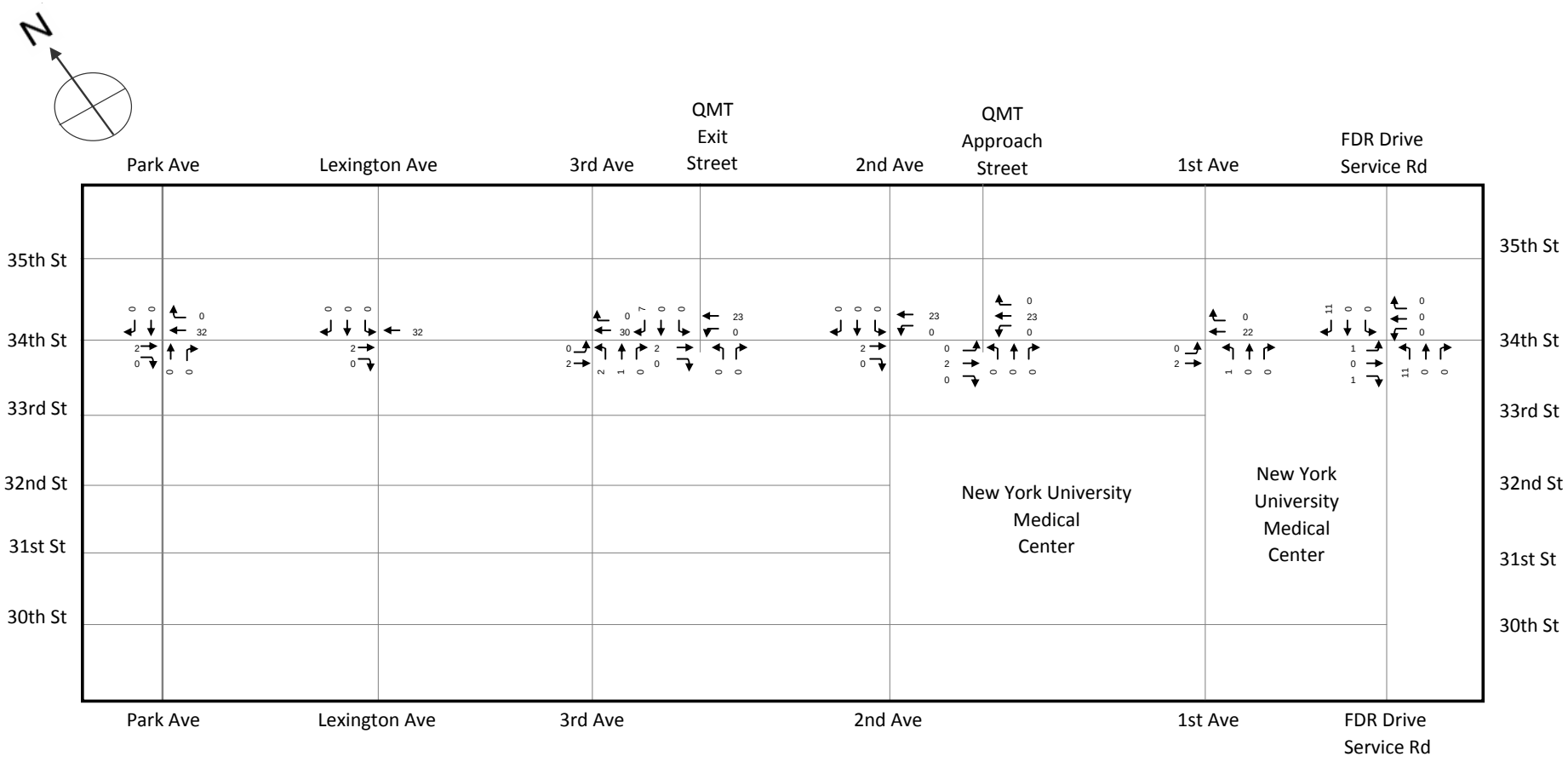

0 750 1,500
Feet

2014 Project Incremental Traffic Volumes - Inset 2
(Weekday AM Peak Hour)

15 PENN PLAZA

Figure C-19

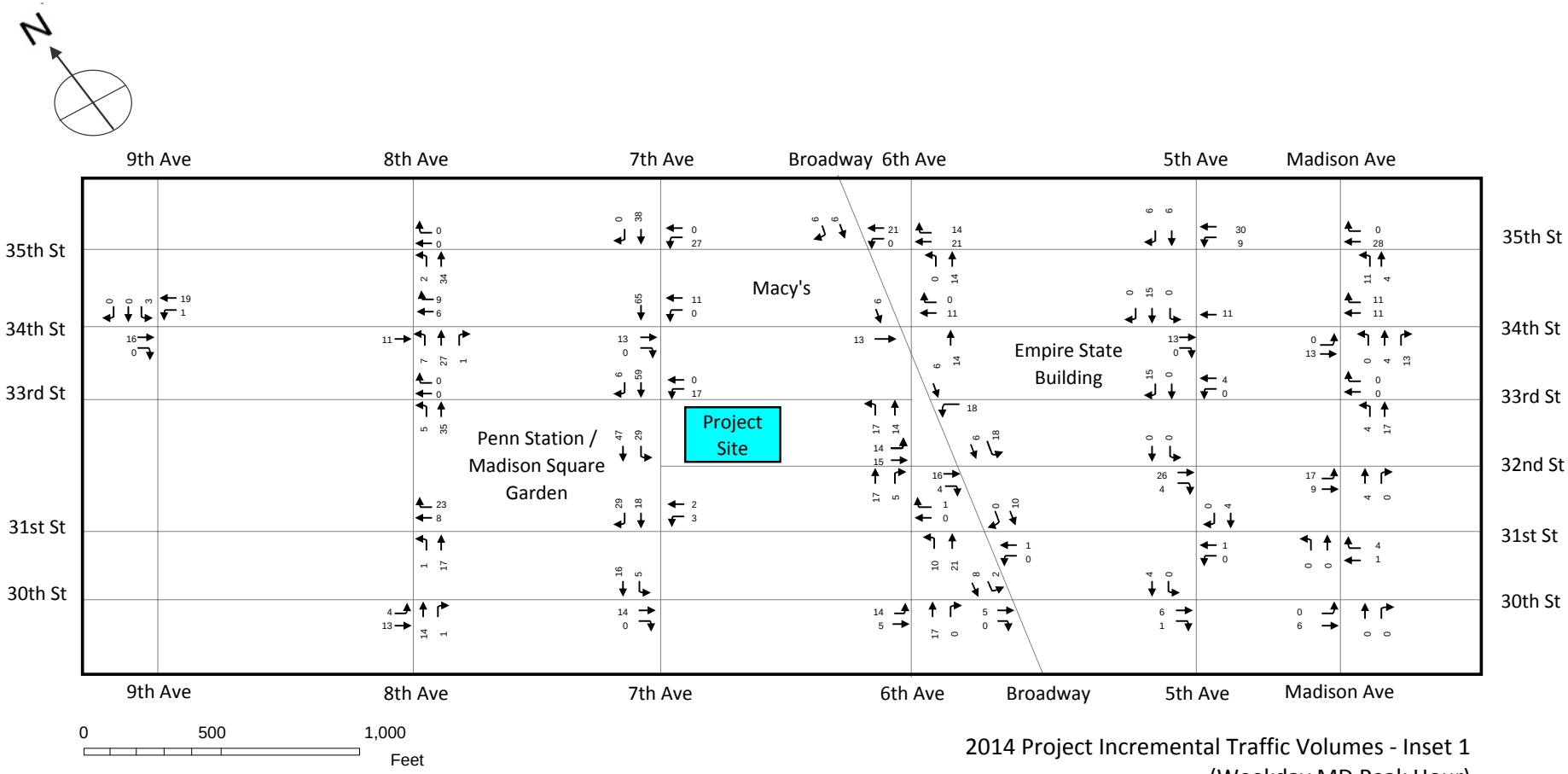

2014 Project Incremental Traffic Volumes - Inset 1
(Weekday MD Peak Hour)

15 PENN PLAZA

Figure C-20

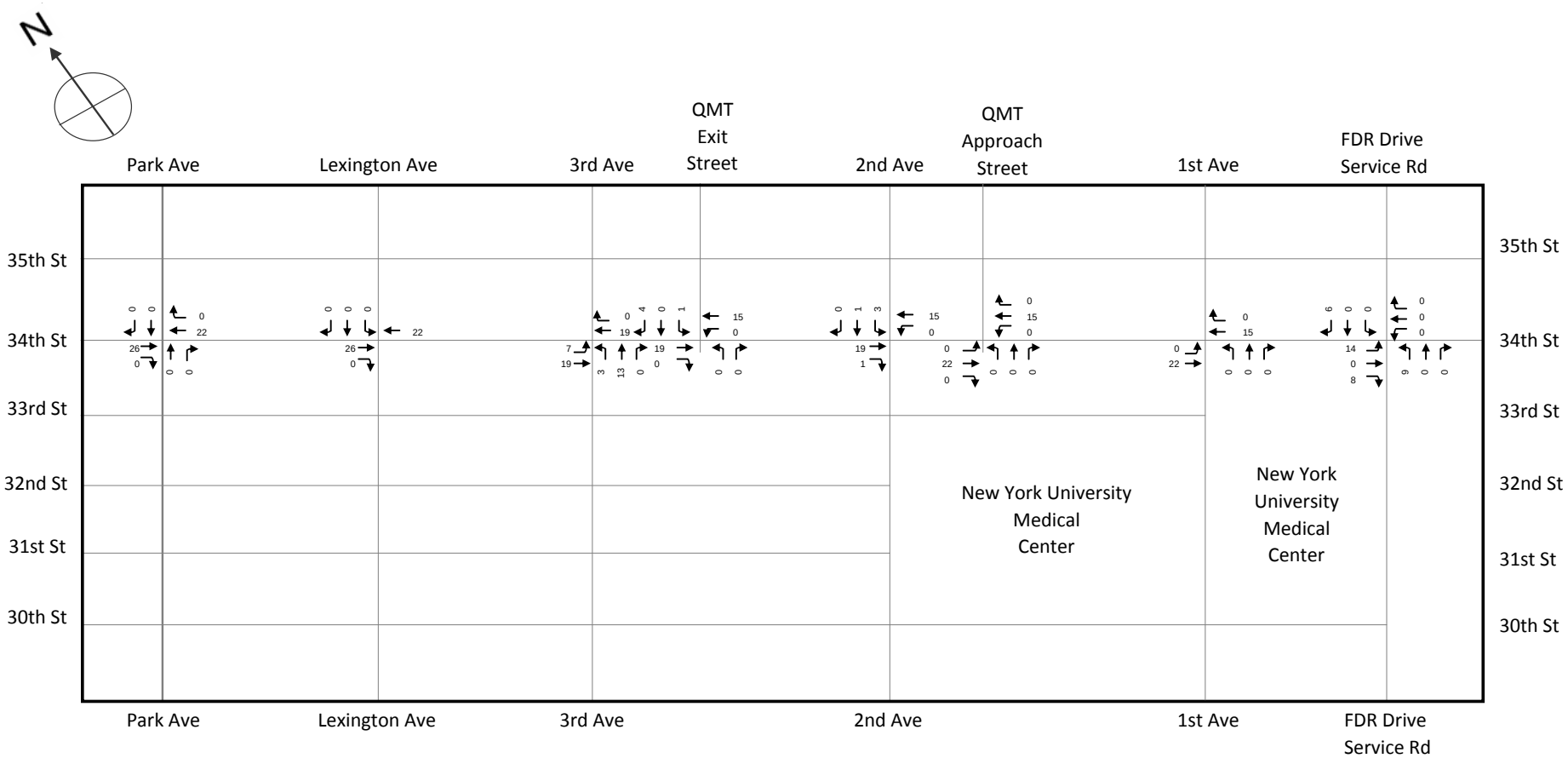

0 750 1,500
Feet

2014 Project Incremental Traffic Volumes - Inset 2
(Weekday MD Peak Hour)

15 PENN PLAZA

Figure C-21

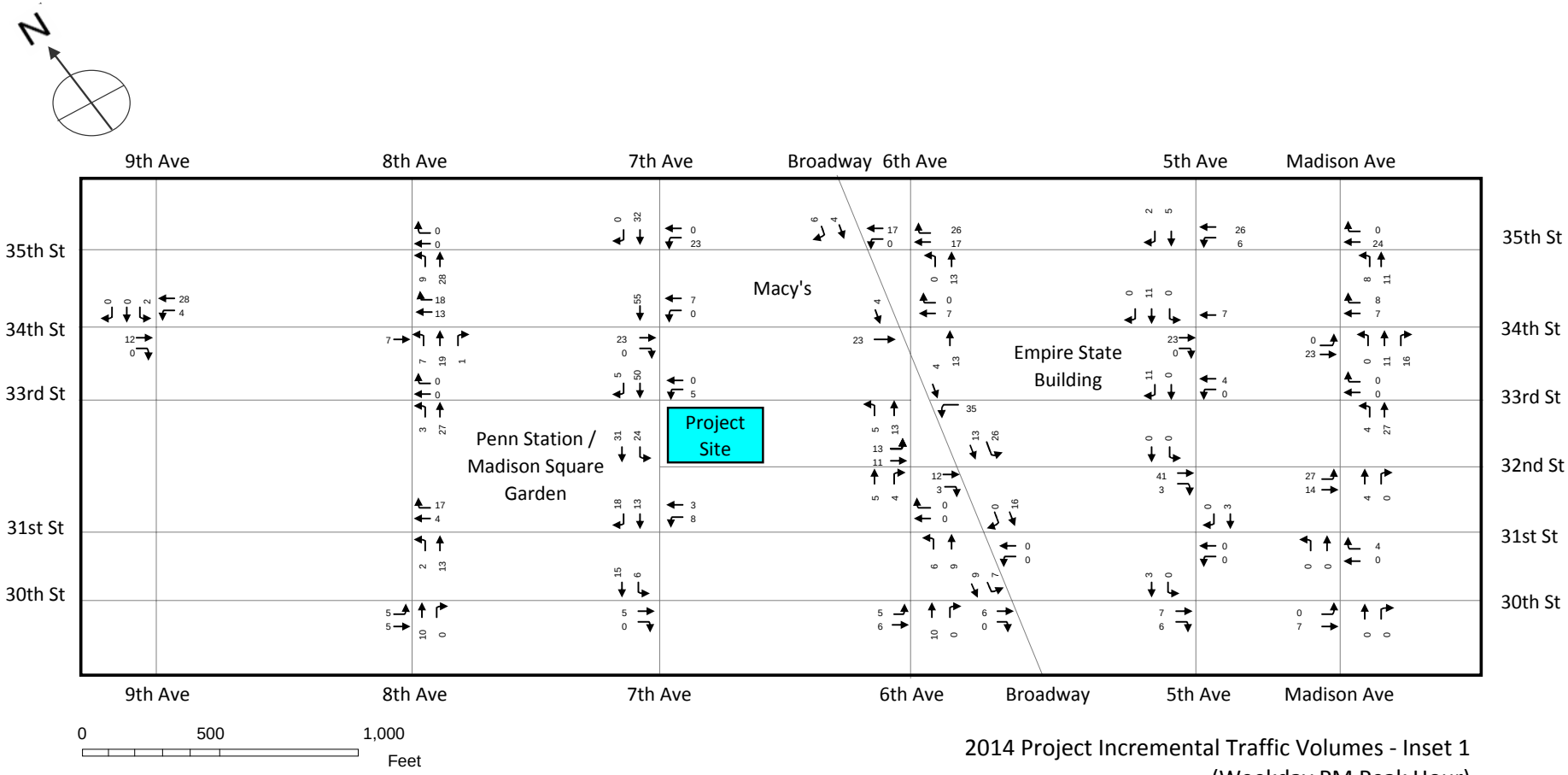

2014 Project Incremental Traffic Volumes - Inset 1
(Weekday PM Peak Hour)

15 PENN PLAZA

Figure C-22

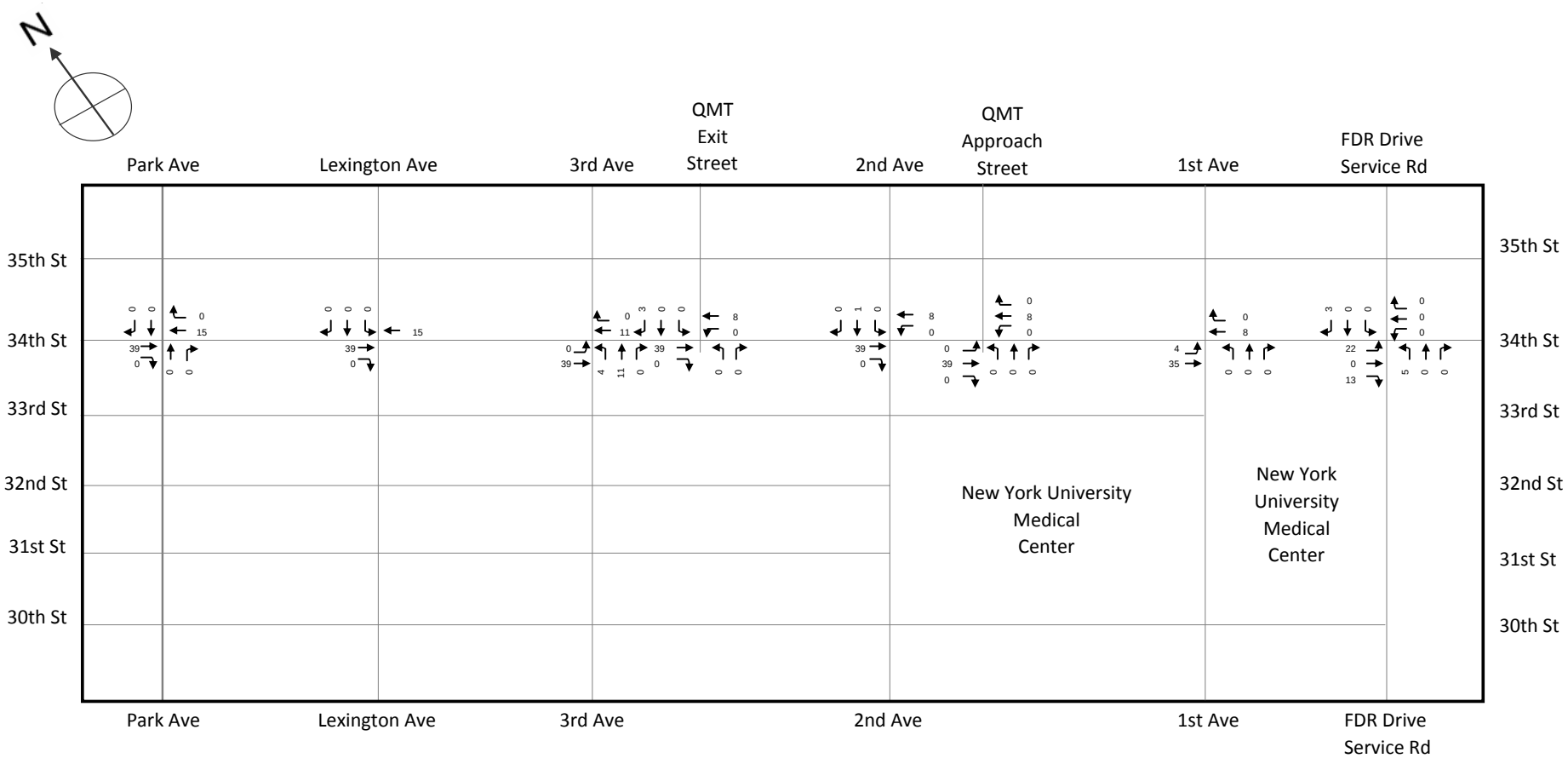

0 750 1,500
Feet

2014 Project Incremental Traffic Volumes - Inset 2
(Weekday PM Peak Hour)

15 PENN PLAZA

Figure C-23

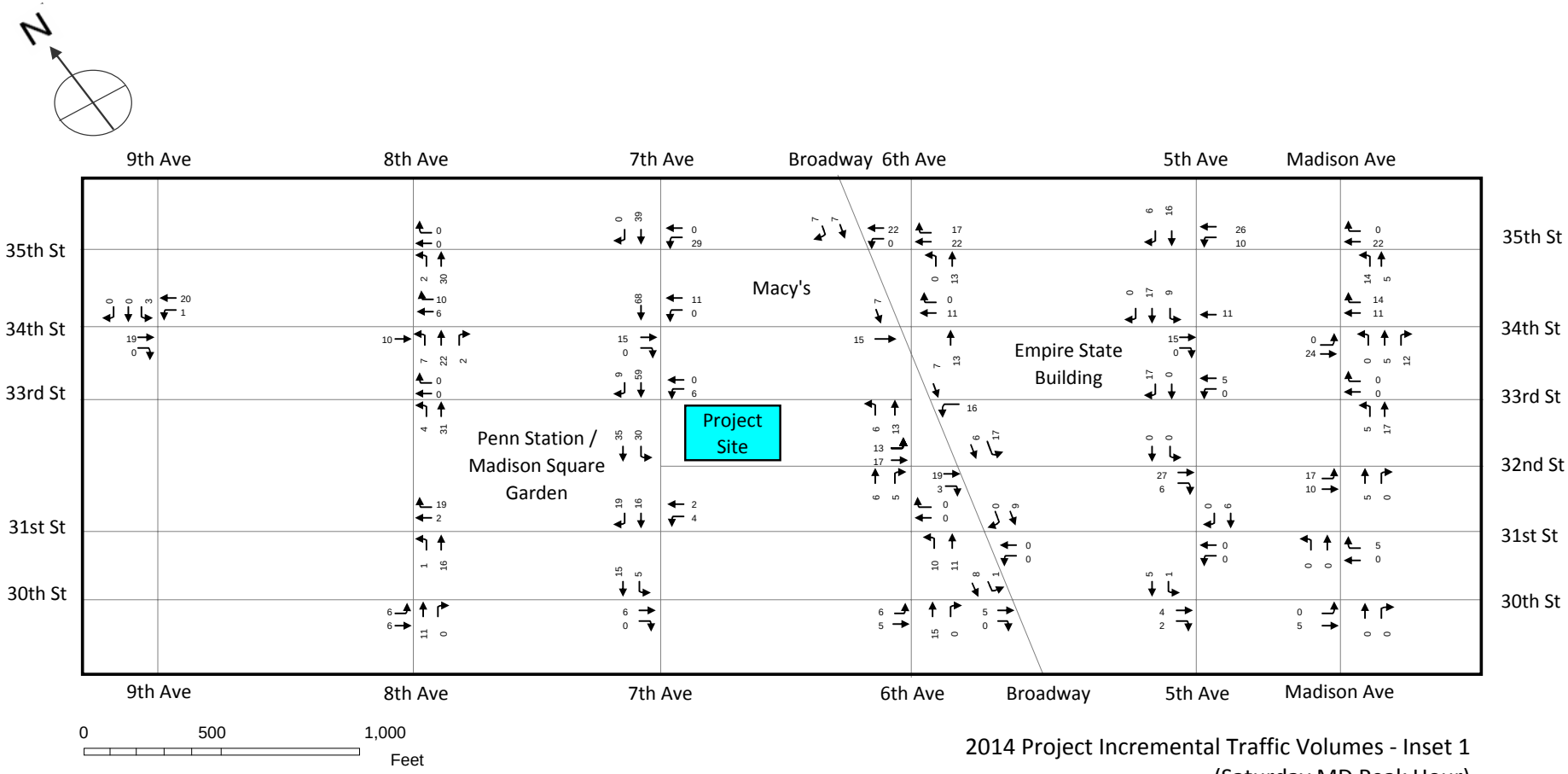

2014 Project Incremental Traffic Volumes - Inset 1
(Saturday MD Peak Hour)

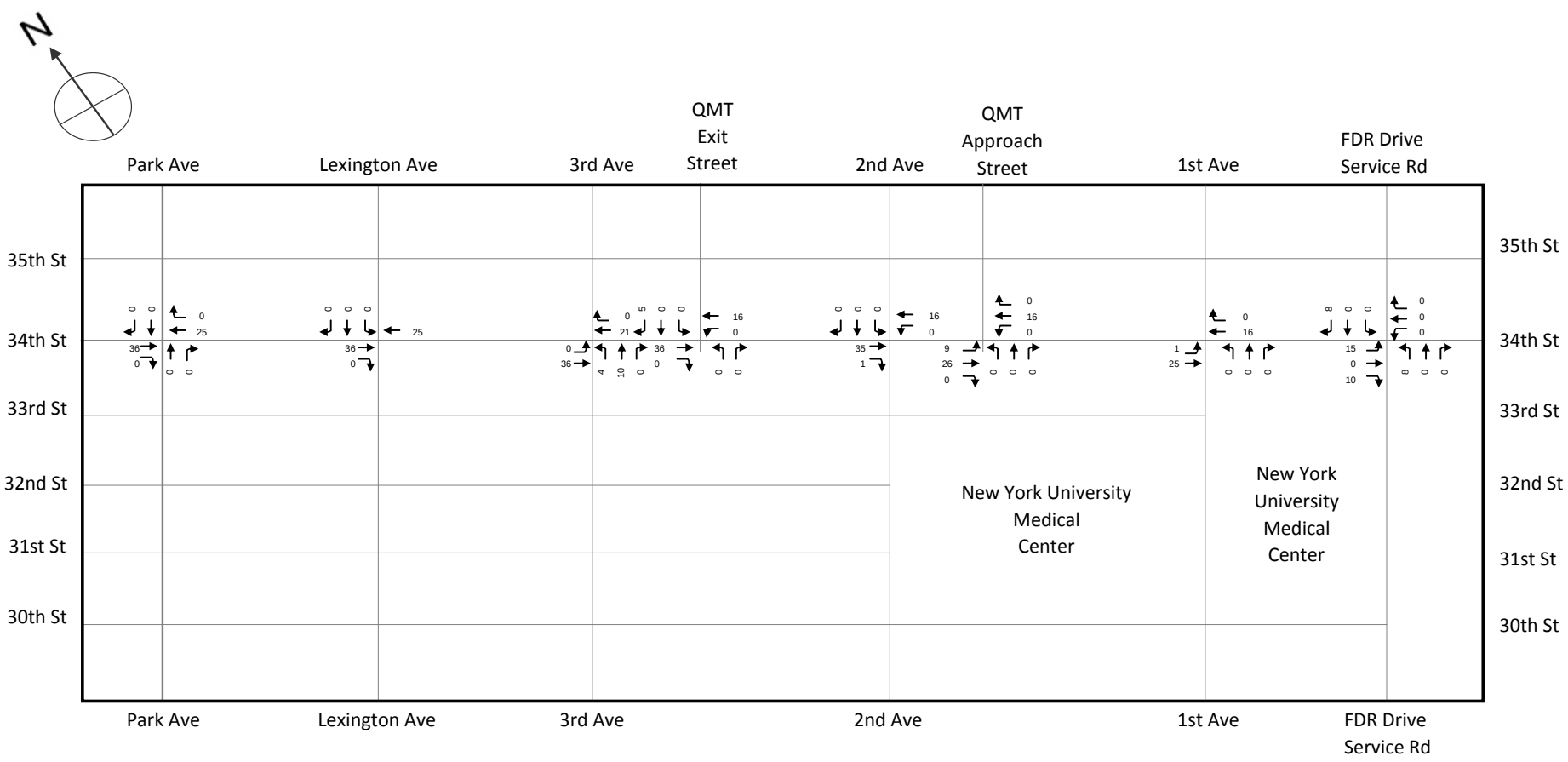

0 750 1,500
Feet

2014 Project Incremental Traffic Volumes - Inset 2
(Saturday MD Peak Hour)

15 PENN PLAZA

Figure C-25

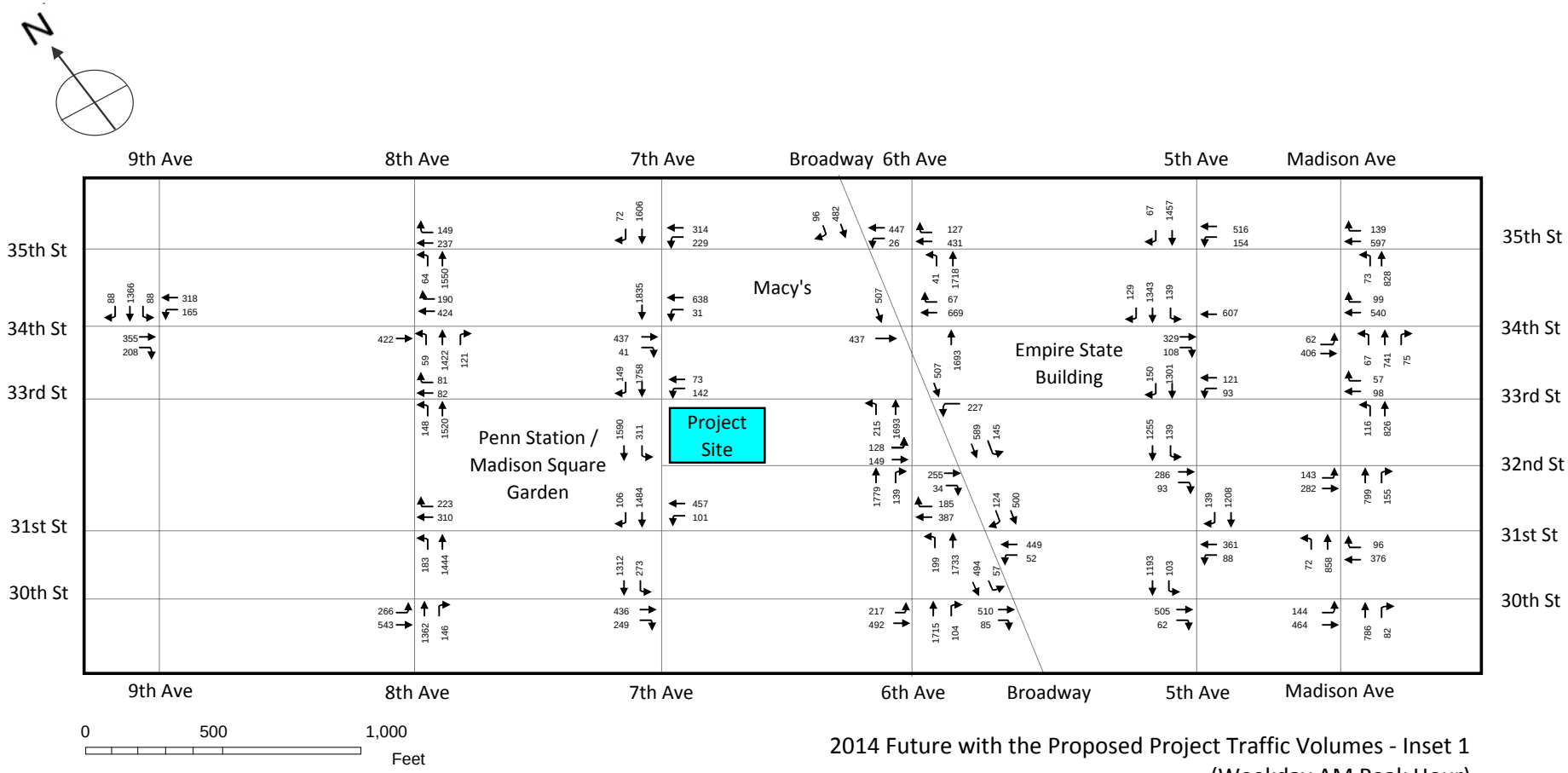

2014 Future with the Proposed Project Traffic Volumes - Inset 1
(Weekday AM Peak Hour)

15 PENN PLAZA

Figure C-26

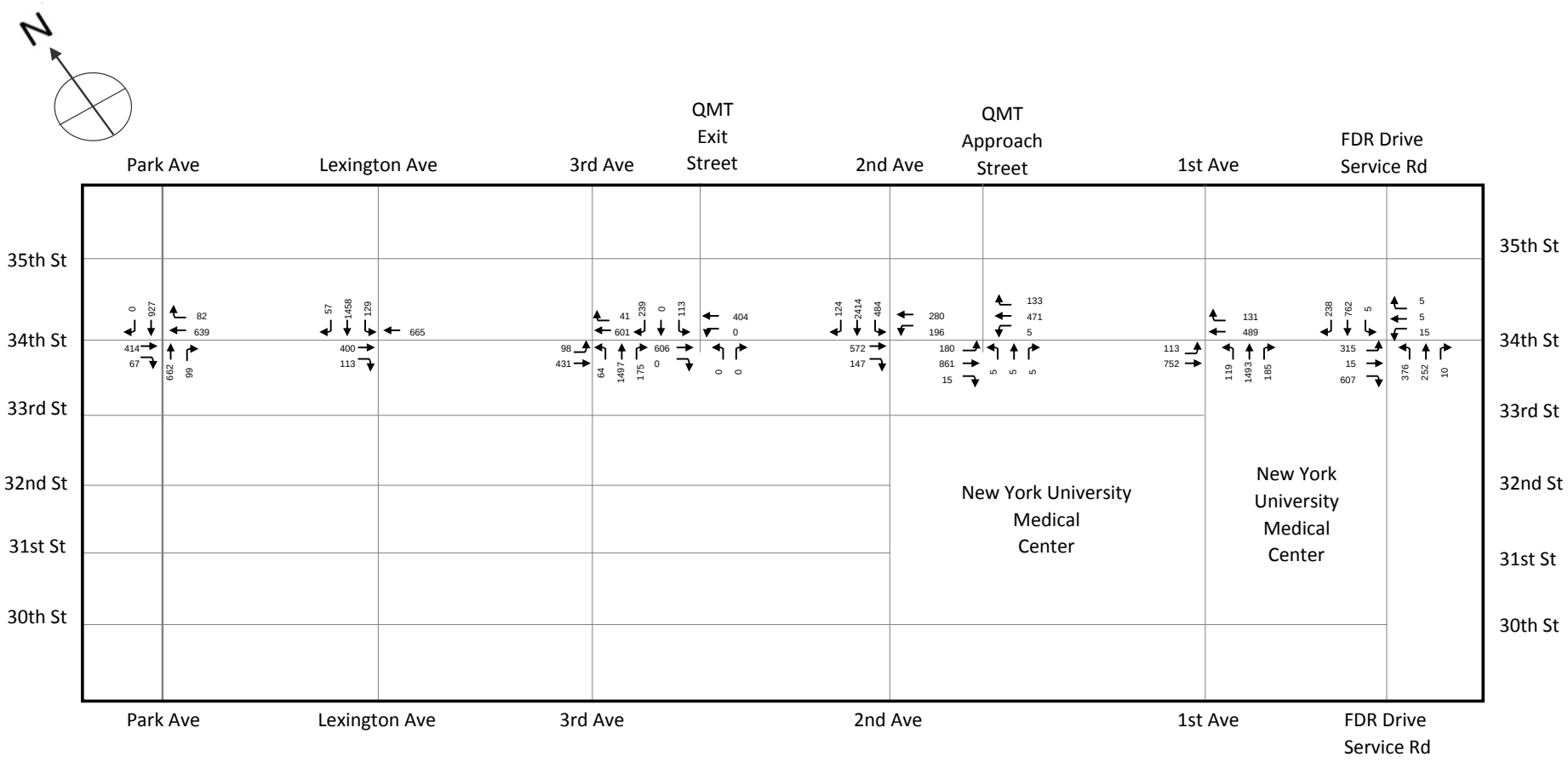

0 750 1,500
Feet

2014 Future with the Proposed Project Traffic Volumes - Inset 2
(Weekday AM Peak Hour)

15 PENN PLAZA

Figure C-27

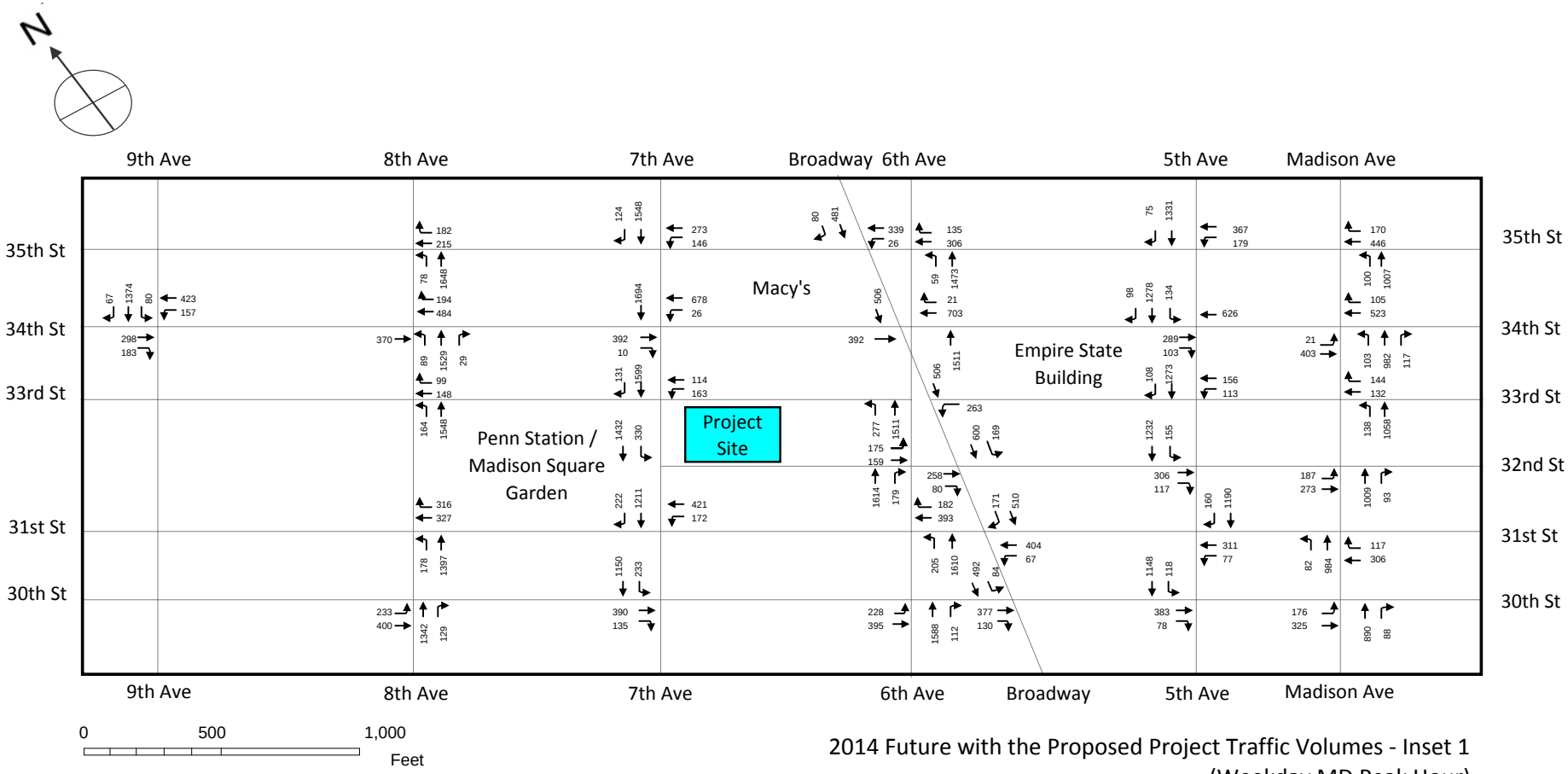

2014 Future with the Proposed Project Traffic Volumes - Inset 1
(Weekday MD Peak Hour)

15 PENN PLAZA

Figure C-28

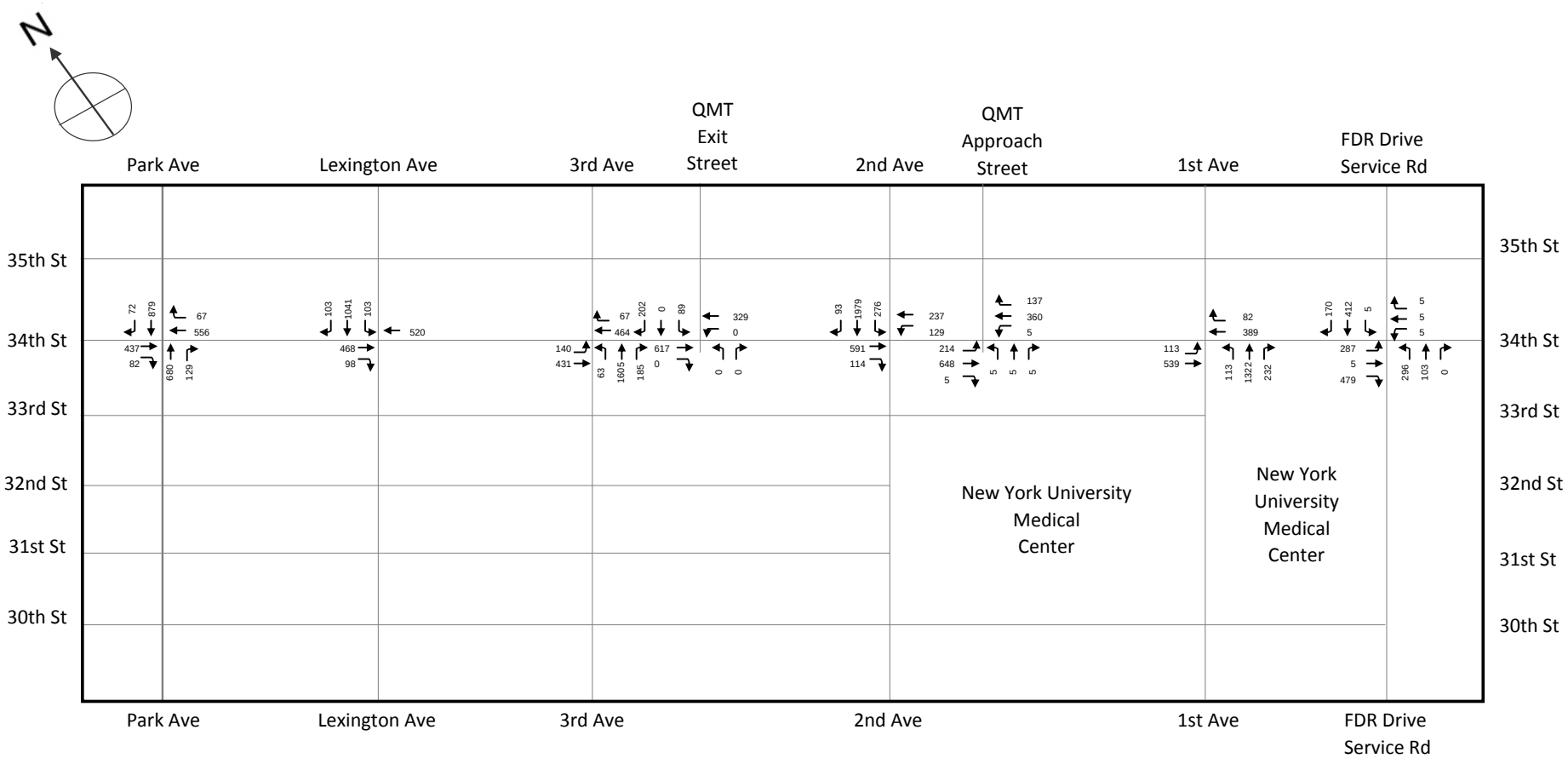

0 750 1,500
Feet

2014 Future with the Proposed Project Traffic Volumes - Inset 2
(Weekday MD Peak Hour)

15 PENN PLAZA

Figure C-29

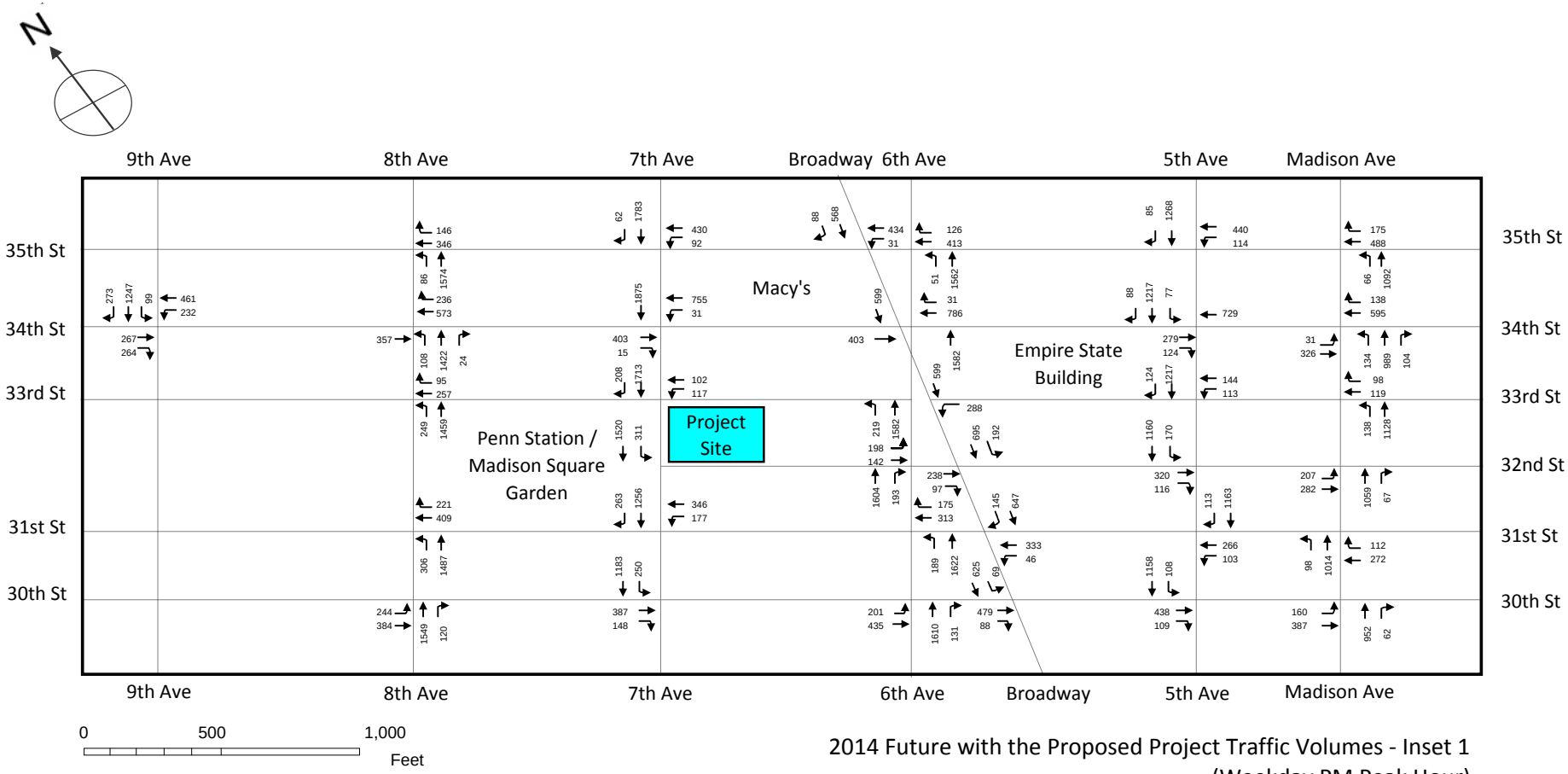

2014 Future with the Proposed Project Traffic Volumes - Inset 1
(Weekday PM Peak Hour)

15 PENN PLAZA

Figure C-30

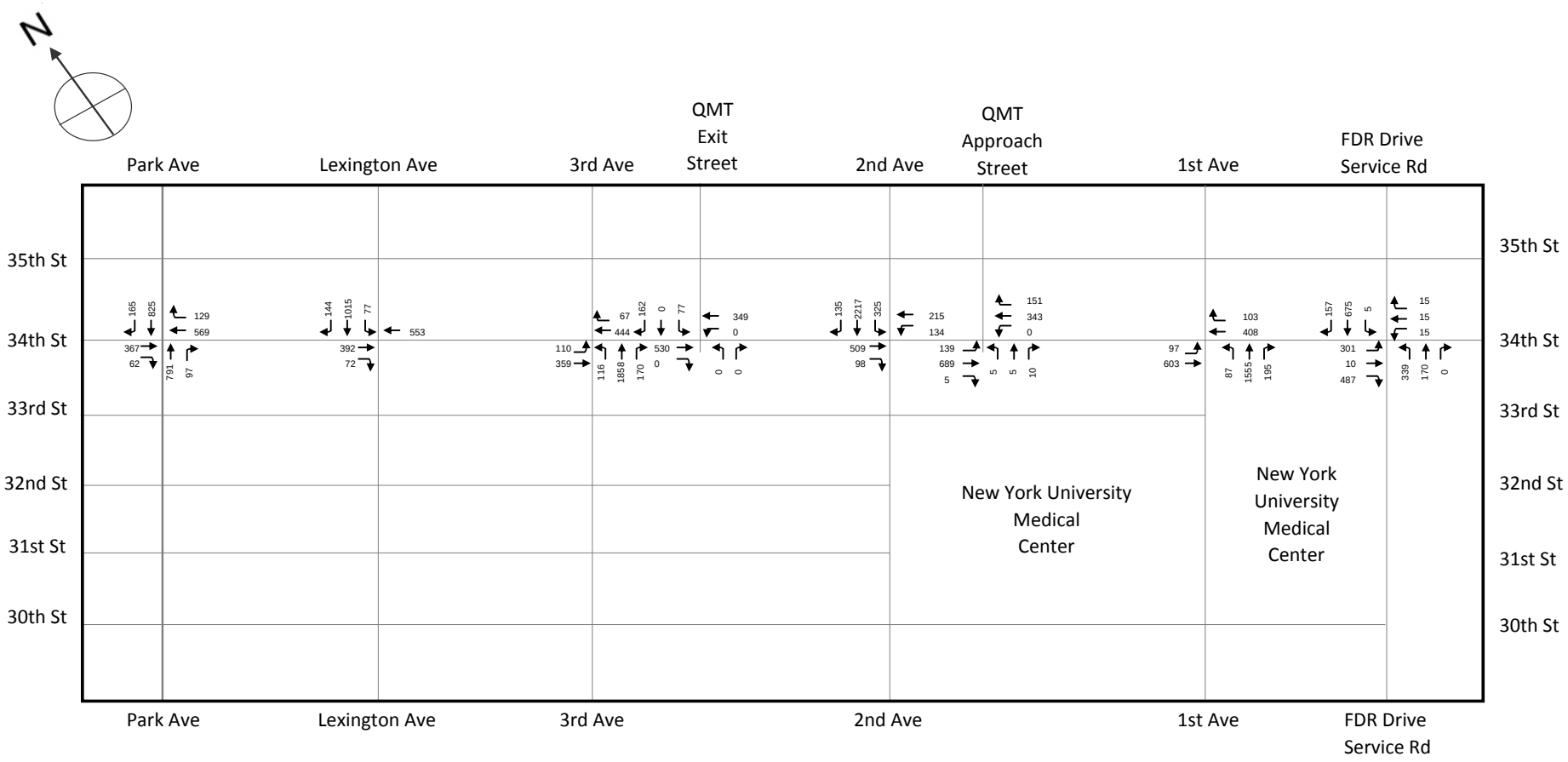

0 750 1,500
Feet

2014 Future with the Proposed Project Traffic Volumes - Inset 2
(Weekday PM Peak Hour)

15 PENN PLAZA

Figure C-31

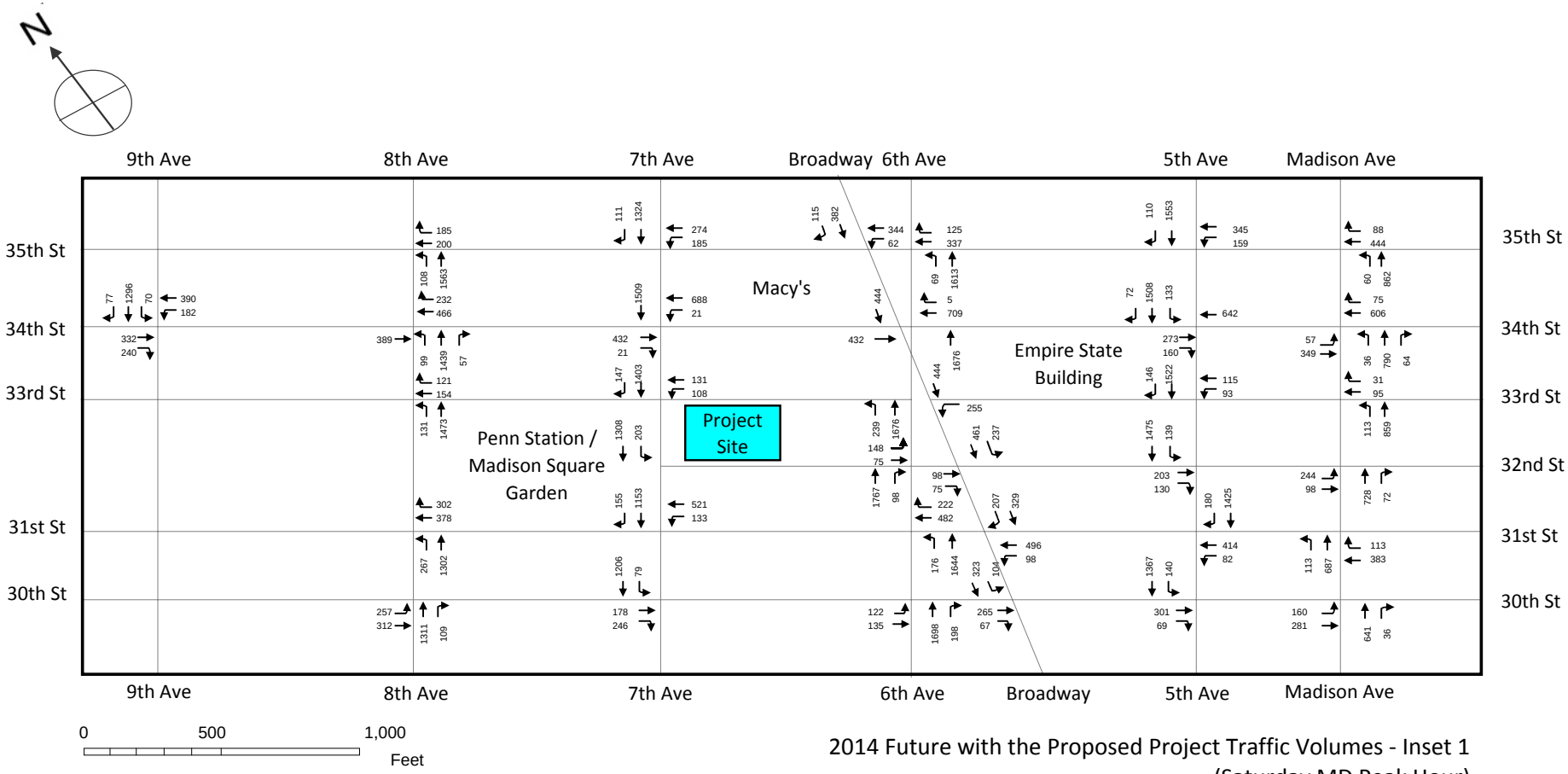

2014 Future with the Proposed Project Traffic Volumes - Inset 1
(Saturday MD Peak Hour)

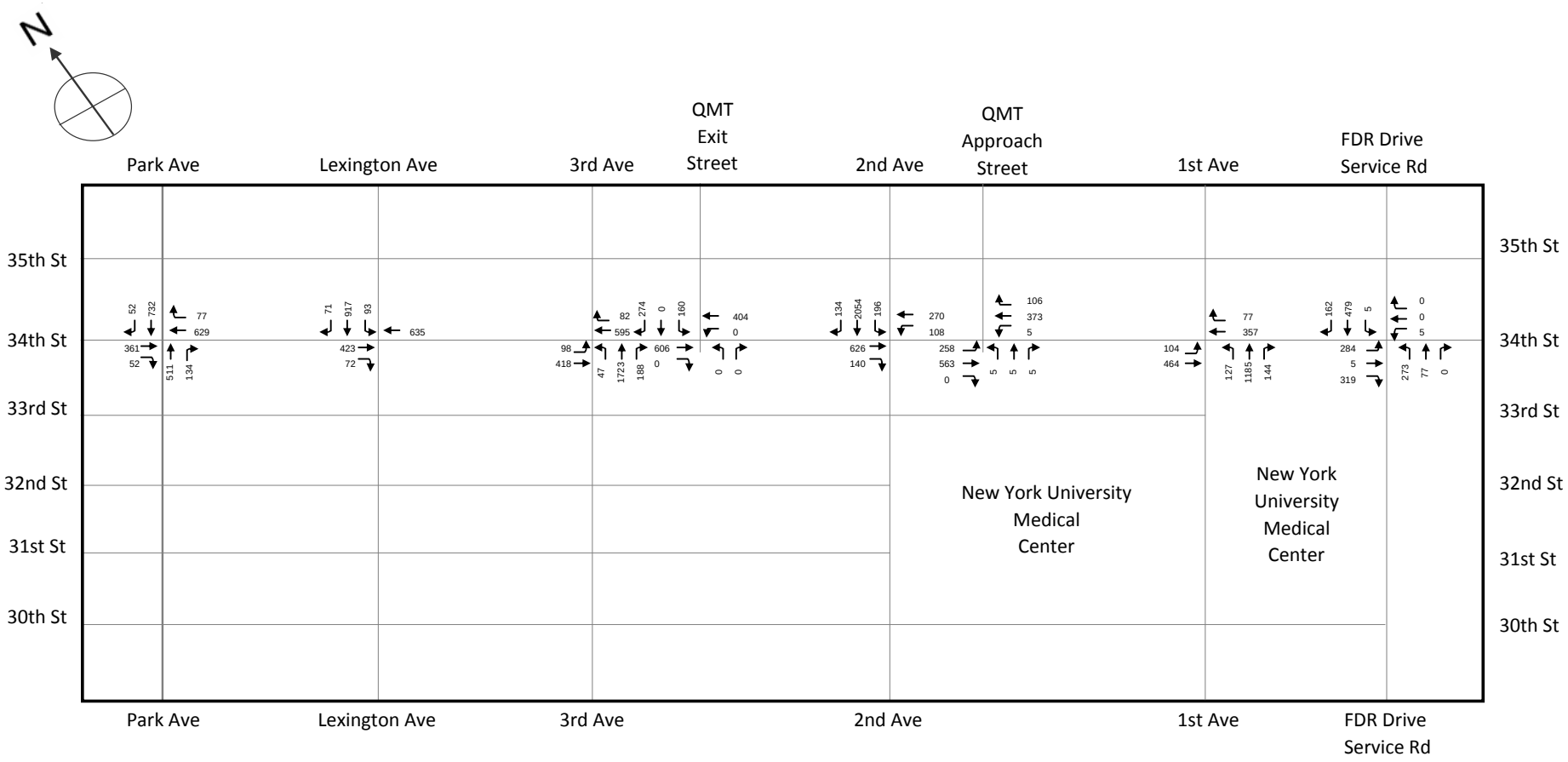

0 750 1,500
Feet

2014 Future with the Proposed Project Traffic Volumes - Inset 2
(Saturday MD Peak Hour)

15 PENN PLAZA

Figure C-33

APPENDIX C.3
Traffic Level of Service Tables

Analysis Location		Lane Group	Weekday AM			Weekday MD			Weekday PM			Saturday MD		
			V/C Ratio	Delay (spv)	LOS	V/C Ratio	Delay (spv)	LOS	V/C Ratio	Delay (spv)	LOS	V/C Ratio	Delay (spv)	LOS
1	Fifth Ave & 35th St													
Westbound		L	0.81	68.1	E	0.96	95.2	F	0.58	47.1	mid-D	0.81	66.7	E
		T	0.90	48.4	mid-D	0.61	27.9	C	0.77	35.1	D	0.59	26.8	C
Southbound		TR	0.66	14.4	B	0.57	13.0	B	0.61	13.7	B	0.65	14.1	B
Intersection				24.8	C		22.9	C		19.9	B		19.7	B
2	Fifth Ave & 34th St													
Eastbound		T	0.59	23.2	C	0.50	20.9	C	0.44	19.7	B	0.42	19.1	B
		R	0.42	22.0	C	0.40	21.4	C	0.48	23.8	C	0.61	28.9	C
Westbound		T	0.49	19.2	B	0.52	19.7	B	0.62	21.5	C	0.52	19.5	B
Southbound		LTR	0.65	17.8	B	0.61	17.2	B	0.54	16.3	B	0.59	16.7	B
Intersection				19.0	B		18.4	B		18.5	B		18.3	B
3	Fifth Ave & 33rd St													
Westbound		LT	0.79	50.3	mid-D		85.8	F	0.90	64.6	E	0.75	45.7	mid-D
Southbound		TR	0.69	8.9	A	0.61	7.8	A	0.66	8.5	A	0.70	8.9	A
Intersection				14.2	B		20.5	C		17.4	B		12.9	B
4	Fifth Ave & 31st St													
Westbound		L	0.33	25.2	C	0.31	24.7	C	0.39	26.5	C	0.31	24.5	C
		T	0.70	34.4	C	0.57	29.5	C	0.42	25.4	C	0.81	40.8	D
Southbound		TR	0.74	13.4	B	0.71	12.8	B	0.70	12.6	B	0.79	14.7	B
Intersection				17.7	B		15.8	B		15.1	B		19.7	B
5	Fifth Ave & 30th St													
Eastbound		TR	1.05	263.8	F	0.96	65.1	E	1.05	268.0	F	0.73	37.1	D
Southbound		LT	0.51	9.7	A	0.48	9.3	A	0.52	9.8	A	0.54	9.9	A
Intersection				80.7	F		22.5	C		78.4	E		14.3	B
7	Sixth Ave & 30th St													
Eastbound		LT	0.89	37.1	D	0.78	100.5	F	0.78	97.8	F	0.25	38.8	D
Northbound		TR	0.87	27.6	C	0.78	33.5	C	0.78	24.1	C	0.88	28.0	C
Intersection				30.1	C		50.1	mid-D		42.3	D		28.9	C
8	Sixth Ave & 31st St													
Westbound		TR	0.47	19.5	B	0.48	19.8	B	0.36	18.0	B	0.55	24.4	C
Northbound		LT	0.81	20.7	C	0.74	25.6	C	0.72	18.3	B	0.73	18.5	B
Intersection				20.4	C		24.2	C		18.2	B		20.1	C
9	Sixth Ave & 32nd St													
Eastbound		L	0.44	22.8	C	0.52	24.7	C	0.60	28.1	C	0.42	21.7	C
		T	0.24	17.1	B	0.23	16.8	B	0.19	16.4	B	0.09	15.4	B
Northbound		TR	0.83	21.6	C	0.77	19.5	B	0.80	20.5	C	0.76	19.1	B
Intersection				21.4	C		19.7	B		20.9	C		19.2	B
10	Sixth Ave & 33rd St													
Northbound		L	0.37	19.8	B	0.47	21.5	C	0.41	20.5	C	0.41	20.4	C
		T	0.82	26.3	C	0.71	23.0	C	0.75	24.1	C	0.76	24.3	C
Intersection				25.6	C		22.8	C		23.6	C		23.8	C

Analysis Location		Lane Group	Weekday AM			Weekday MD			Weekday PM			Saturday MD		
			V/C Ratio	Delay (spv)	LOS	V/C Ratio	Delay (spv)	LOS	V/C Ratio	Delay (spv)	LOS	V/C Ratio	Delay (spv)	LOS
11	Sixth Ave / Bdwy & 34th St													
Eastbound		T	1.05	268.5	F	1.04	234.5	F	0.85	47.4	mid-D	1.03	354.3	F
Westbound		TR	1.01	104.2	F	0.91	46.1	mid-D	1.05	256.7	F	0.83	38.6	D
Northbound		T	0.87	31.0	C	0.69	25.1	C	0.73	26.1	C	0.78	27.1	C
Southbound		T	0.67	36.3	D	0.68	36.5	D	0.80	41.2	D	0.60	34.3	C
Intersection				79.7	E		58.4	E		89.4	F		73.9	E
12	Sixth Ave & 35th St													
Westbound		TR	0.62	28.9	C	0.43	21.7	C	0.50	22.8	C	0.44	21.7	C
Northbound		LT	0.59	9.8	A	0.51	12.3	B	0.55	12.7	B	0.58	13.0	B
Intersection				13.9	B		14.1	B		15.0	B		14.7	B
13	Broadway & 35th St													
Westbound		L	0.09	20.5	C	0.09	20.5	C	0.12	21.0	C	0.21	22.4	C
		T	0.89	51.8	mid-D	0.66	33.2	C	0.91	55.3	E	0.68	33.5	C
Southbound		T	0.30	8.3	A	0.31	10.2	B	0.36	8.7	A	0.25	7.8	A
		R	0.25	9.3	A	0.21	8.7	A	0.27	9.8	A	0.36	11.4	B
Intersection				25.6	C		17.8	B		25.9	C		18.6	B
16	Broadway & 33rd St													
Westbound		L	1.00	87.8	F	0.99	81.2	F	1.03	196.6	F	0.77	40.3	D
Southbound		T	0.40	15.9	B	0.41	16.1	B	0.46	16.6	B	0.34	15.2	B
Intersection				38.9	D		37.6	D		71.0	E		24.2	C
17	Broadway & 32nd St													
Eastbound		TR	0.26	16.9	B	0.30	17.3	B	0.30	17.4	B	0.14	15.7	B
Southbound		L	0.41	17.3	B	0.46	18.8	B	0.49	19.3	B	0.55	20.2	C
		T	0.45	15.0	B	0.46	15.2	B	0.49	15.6	B	0.33	13.6	B
Intersection				15.8	B		16.3	B		16.6	B		15.8	B
18	Broadway & 31st St													
Westbound		LT	0.87	41.1	D	0.82	36.7	D	0.59	24.1	C	1.05	254.9	F
Southbound		TR	0.63	18.6	B	0.74	21.9	C	0.75	22.1	C	0.64	19.5	B
Intersection				28.0	C		27.4	C		22.7	C		139.5	F
19	Broadway & 30th St													
Eastbound		TR	0.81	32.7	C	0.71	27.4	C	0.74	28.4	C	0.44	20.3	C
Southbound		LT	0.52	16.3	B	0.56	17.1	B	0.59	17.5	B	0.43	15.1	B
Intersection				24.3	C		21.6	C		22.2	C		17.1	B
22	Seventh Ave & 35th St													
Westbound		L	0.59	29.9	C	0.45	25.3	C	0.38	24.1	C	0.60	30.5	C
		LT	0.60	137.2	F	0.49	25.5	C	0.83	42.8	D	0.50	25.3	C
Southbound		TR	0.62	13.0	B	0.66	17.9	B	0.65	13.3	B	0.53	11.9	B
Intersection				30.3	C		19.3	B		18.6	B		15.6	B

Analysis Location		Lane Group	Weekday AM			Weekday MD			Weekday PM			Saturday MD		
			V/C Ratio	Delay (spv)	LOS	V/C Ratio	Delay (spv)	LOS	V/C Ratio	Delay (spv)	LOS	V/C Ratio	Delay (spv)	LOS
23	Seventh Ave & 34th St													
Eastbound		T	0.84	40.1	D	0.71	30.7	C	0.68	29.3	C	0.43	73.6	E
Westbound		LT	0.72	28.5	C	0.73	28.3	C	0.83	32.7	C	0.51	22.2	C
Southbound		T	0.68	15.4	B	0.66	15.1	B	0.68	15.2	B	0.55	13.4	B
Intersection				22.4	C		20.8	C		21.8	C		26.3	C
24	Seventh Ave & 33rd St													
Westbound		LT	0.92	75.8	E	1.05	282.5	F	0.92	73.0	E	0.81	52.6	mid-D
Southbound		TR	0.77	7.8	A	0.72	6.8	A	0.78	7.8	A	0.61	5.4	A
Intersection				14.7	B		44.5	D		14.9	B		12.0	B
25	Seventh Ave & 32nd St													
Southbound		LT	0.61	5.2	A	0.59	5.1	A	0.58	4.9	A	0.46	4.2	A
Intersection				5.2	A		5.1	A		4.9	A		4.2	A
26	Seventh Ave & 31st St													
Westbound		LT	0.84	36.9	D	0.93	49.4	mid-D	0.74	30.3	C	0.97	56.0	E
Southbound		TR	0.68	16.9	B	0.63	20.8	C	0.61	15.8	B	0.51	14.5	B
Intersection				21.7	C		28.7	C		19.0	B		27.9	C
27	Seventh Ave & 30th St													
Eastbound		T	0.68	29.6	C	0.61	26.8	C	0.59	97.5	F	0.19	18.3	B
		R	0.62	28.9	C	0.31	20.4	C	0.33	95.5	F	0.56	25.9	C
Southbound		LT	0.67	15.3	B	0.55	17.7	B	0.52	13.2	B	0.47	12.6	B
Intersection				19.1	B		19.5	B		34.0	C		15.0	B
34	Eighth Ave & 30th St													
Eastbound		LT	0.74	27.3	C	0.57	99.9	F	0.60	113.8	F	0.52	21.4	C
Northbound		TR	0.59	15.5	B	0.61	17.3	B	0.67	16.7	B	0.55	18.5	B
Intersection				19.3	B		40.3	D		41.3	D		19.3	B
35	Eighth Ave & 31st St													
Westbound		TR	0.51	20.0	C	0.60	21.9	C	0.52	20.1	C	0.61	102.6	F
Northbound		LT	0.67	18.2	B	0.66	18.1	B	0.78	20.8	C	0.67	22.9	C
Intersection				18.6	B		19.1	B		20.6	C		45.4	mid-D
36	Eighth Ave & 33rd St													
Westbound		TR	0.16	11.6	B	0.22	12.1	B	0.29	12.7	B	0.23	12.1	B
Northbound		LT	0.82	28.0	C	0.85	29.6	C	0.87	30.8	C	0.76	35.4	D
Intersection				26.5	C		27.3	C		27.8	C		31.9	C
37	Eighth Ave & 34th St													
Eastbound		T	0.67	25.7	C	0.57	22.2	C	0.58	22.4	C	0.29	16.5	B
Westbound		T	0.36	17.4	B	0.41	18.0	B	0.46	18.7	B	0.47	18.6	B
		R	0.56	25.1	C	0.56	25.2	C	0.60	26.6	C			
Northbound		LTR	0.83	28.7	C	0.84	28.9	C	0.77	26.4	C	0.77	36.1	D
Intersection				26.0	C		25.6	C		24.1	C		28.5	C

Analysis Location		Lane Group	Weekday AM			Weekday MD			Weekday PM			Saturday MD		
			V/C Ratio	Delay (spv)	LOS	V/C Ratio	Delay (spv)	LOS	V/C Ratio	Delay (spv)	LOS	V/C Ratio	Delay (spv)	LOS
38	Eighth Ave & 35th St													
	Westbound	TR	0.88	53.3	mid-D	0.72	30.4	C	1.04	232.6	F	0.98	72.9	E
	Northbound	LT	0.54	9.9	A	0.70	18.8	B	0.54	9.8	A	0.54	9.9	A
	Intersection			17.4	B		20.7	C		56.4	E		20.8	C
48	Ninth Ave & 34th St													
	Eastbound	T	0.77	39.4	D	0.69	34.9	C	0.61	31.5	C	0.65	29.4	C
		R	0.87	63.0	E	0.75	47.1	mid-D	1.05	286.6	F			
	Westbound	DefL	0.59	23.2	C				0.78	39.1	D	0.59	22.1	C
		T	0.48	17.2	B	0.66	20.8	C	0.64	21.2	C	0.26	13.4	B
	Southbound	LTR	0.81	26.4	C	0.79	25.6	C	0.89	31.1	C	0.67	22.5	C
	Intersection			29.5	C		27.0	C		54.0	mid-D		22.6	C
87	Madison Ave & 30th St													
	Eastbound	L	0.46	27.7	C	0.59	32.1	C	0.50	28.8	C	0.48	27.7	C
		T	0.89	50.0	mid-D	0.54	28.4	C	0.66	32.1	C	0.40	24.8	C
	Northbound	TR	0.76	15.8	B	0.78	15.8	B	0.81	17.1	B	0.49	10.0	B
	Intersection			26.7	C		20.2	C		21.4	C		15.6	B
88	Madison Ave & 31st St													
	Westbound	TR	0.51	25.7	C	0.48	25.4	C	0.40	24.0	C	0.55	26.4	C
	Northbound	LT	0.78	16.0	B	0.84	18.7	B	0.89	21.7	C	0.61	11.7	B
	Intersection			19.0	B		20.3	C		22.2	C		16.9	B
89	Madison Ave & 32nd St													
	Eastbound	L	0.54	30.4	C	0.59	31.2	C	0.65	34.7	C	0.76	40.9	D
		T	0.61	29.4	C	0.50	25.8	C	0.55	27.2	C	0.12	19.4	B
	Northbound	TR	0.61	12.8	B	0.61	12.5	B	0.63	12.8	B	0.41	10.2	B
	Intersection			17.8	B		16.7	B		17.7	B		17.3	B
90	Madison Ave & 33rd St													
	Westbound	T	0.21	19.4	B	0.28	20.4	C	0.24	19.6	B	0.18	18.8	B
		R	0.23	20.5	C	0.57	30.7	C	0.37	23.5	C	0.11	18.3	B
	Northbound	LT	0.61	14.2	B	0.70	15.6	B	0.76	17.3	B	0.53	12.8	B
	Intersection			15.0	B		17.5	B		17.9	B		13.5	B
91	Madison Ave & 34th St													
	Eastbound	L	0.64	49.6	mid-D	0.21	23.1	C	0.40	34.1	C	0.73	67.2	E
		T	0.82	38.1	D	0.78	35.7	D	0.59	26.7	C	0.60	26.8	C
	Westbound	T	0.88	43.1	D	0.88	43.1	D	1.03	175.6	F	0.95	50.9	mid-D
		R	0.29	21.8	C	0.36	23.1	C	0.58	31.0	C	0.30	22.0	C
	Northbound	LTR	0.60	14.1	B	0.83	20.4	C	0.84	20.6	C	0.49	12.4	B
	Intersection			28.3	C		28.5	C		62.9	E		28.7	C
92	Madison Ave & 35th St													
	Westbound	T	1.05	209.5	F	0.66	25.9	C	0.83	39.9	D	0.77	34.3	C
		R	0.86	76.8	E	0.77	55.9	E	1.05	312.3	F	0.50	44.3	D
	Northbound	LT	0.38	11.1	B	0.51	16.0	B	0.48	12.0	B	0.34	10.8	B
	Intersection			82.4	F		22.3	C		49.0	mid-D		19.4	B

Analysis Location		Lane Group	Weekday AM			Weekday MD			Weekday PM			Saturday MD		
			V/C Ratio	Delay (spv)	LOS	V/C Ratio	Delay (spv)	LOS	V/C Ratio	Delay (spv)	LOS	V/C Ratio	Delay (spv)	LOS
93	Fifth Ave & 32nd St													
Eastbound		T	0.61	30.8	C	0.54	28.0	C	0.58	29.2	C	0.34	23.9	C
		R	0.46	30.1	C	0.49	30.5	C	0.49	30.2	C	0.53	32.0	C
Southbound		LT	0.79	14.7	B	0.72	12.9	B	0.77	14.5	B	0.74	13.1	B
Intersection				17.9	B		16.3	B		17.8	B		15.3	B
96	Park Ave & 34th St													
Eastbound		T	0.78	35.6	D	0.80	37.0	D	0.61	27.6	C	0.57	26.1	C
		R	0.27	21.9	C	0.33	23.3	C	0.25	21.5	C	0.10	18.5	B
Westbound		T	1.05	202.5	F	1.05	212.3	F	1.05	203.9	F	1.05	192.8	F
		R	0.25	21.0	C	0.20	20.2	C	0.39	23.8	C	0.28	21.8	C
Northbound		TR	0.55	16.9	B	0.58	17.5	B	0.64	18.7	B	0.47	15.8	B
Southbound		TR	0.67	19.5	B	0.69	20.1	C	0.73	21.0	C	0.55	17.1	B
Intersection				58.7	E		58.1	E		56.3	E		61.4	E
97	Lexington Ave & 34th St													
Eastbound		T	0.70	29.6	C	0.77	33.5	C	0.61	26.5	C	0.62	26.7	C
		R	0.45	26.0	C	0.39	24.2	C	0.29	21.7	C	0.27	21.1	C
Westbound		T	1.05	189.7	F	0.53	23.2	C	1.03	191.6	F	1.05	183.0	F
Southbound		LT	1.01	83.5	F	0.73	16.6	B	0.69	15.6	B	0.54	13.0	B
		R	0.36	20.1	C	0.31	12.5	B	0.92	69.8	E	0.49	25.8	C
Intersection				95.2	F		21.5	C		65.1	E		64.9	E
98	Third Ave & 34th St													
Eastbound		L	0.40	20.9	C	0.51	23.2	C	0.43	21.1	C	0.40	21.3	C
		T	0.71	27.2	C	0.69	26.2	C	0.52	21.2	C	0.58	22.3	C
Westbound		TR	0.82	40.1	D	0.74	35.9	D	0.74	35.9	D	0.92	49.0	mid-D
Northbound		LTR	0.71	18.9	B	0.75	19.8	B	0.86	23.3	C	0.73	19.2	B
Intersection				24.6	C		23.7	C		25.1	C		26.0	C
99	Ramp from I-495 & 34th St													
Eastbound		T	0.30	4.5	A	0.30	4.5	A	0.24	4.2	A	0.30	4.5	A
Westbound		T	0.38	23.3	C	0.33	22.8	C	0.38	24.1	C	0.44	24.3	C
Southbound		L	0.82	75.9	E	0.63	55.3	E	0.56	50.6	mid-D	1.05	311.0	F
		R	0.26	11.5	B	0.22	11.1	B	0.17	10.2	B	0.30	12.0	B
Intersection				17.0	B		14.1	B		14.9	B		46.6	mid-D
100	Second Ave & 34th St													
Eastbound		T	0.74	35.5	D	0.77	37.4	D	0.63	32.3	C	0.74	35.6	D
		R	1.05	292.9	F	0.78	62.1	E	0.67	50.4	mid-D	0.76	53.9	mid-D
Westbound		DefL	0.65	39.3	D	0.43	30.5	C	0.41	27.1	C	0.35	28.2	C
		T	0.38	19.7	B	0.37	19.4	B	0.36	19.3	B	0.41	20.0	C
Southbound		L	0.69	21.5	C	0.39	14.5	B	0.47	15.7	B	0.34	15.1	B
		LTR	0.90	22.8	C	0.73	17.4	B	0.83	20.0	B	0.75	17.8	B
Intersection				34.7	C		22.7	C		22.3	C		22.7	C

Analysis Location		Lane Group	Weekday AM			Weekday MD			Weekday PM			Saturday MD		
			V/C Ratio	Delay (spv)	LOS	V/C Ratio	Delay (spv)	LOS	V/C Ratio	Delay (spv)	LOS	V/C Ratio	Delay (spv)	LOS
101	Ramp to I-495 & 34th St													
Eastbound		L	0.38	14.2	B	0.46	15.3	B	0.30	12.7	B	0.51	15.9	B
		LTR	0.66	17.1	B	0.47	13.6	B	0.48	13.8	B	0.39	12.6	B
Westbound		LT	0.86	52.7	mid-D	0.71	42.2	D	0.66	40.0	D	0.73	43.1	D
		R	0.95	100.0	F	0.99	109.0	F	1.05	296.9	F	0.70	57.9	E
Northbound		LTR	0.11	37.5	D	0.11	37.5	D	0.18	39.5	D	0.11	37.5	D
Intersection				32.9	C		31.0	C		53.2	mid-D		26.0	C
102	First Ave & 34th St													
Eastbound		LT	1.05	244.5	F	0.82	33.9	C	0.85	36.5	D	0.68	27.5	C
Westbound		TR	0.67	34.2	C	0.51	30.8	C	0.59	32.1	C	0.46	29.9	C
Northbound		LTR	0.73	19.9	B	0.69	19.2	B	0.73	20.0	C	0.56	17.2	B
Intersection				82.7	F		24.5	C		25.7	C		21.7	C
103	FDR Drive & 34th St													
Eastbound		L	1.05	292.6	F	0.98	89.1	F	1.00	94.3	F	0.87	66.0	E
		LTR	0.92	69.5	E	0.74	47.7	mid-D	0.75	49.2	mid-D	0.44	34.7	C
		R	0.84	36.7	D	0.66	25.6	C	0.65	25.3	C	0.52	21.3	C
Westbound		LTR	0.08	26.8	C	0.04	26.2	C	0.14	27.5	C	0.02	25.9	C
Northbound		L	1.05	174.6	F	0.64	14.9	B	0.94	47.4	mid-D	0.62	14.9	B
		TR	0.28	7.6	A	0.11	6.3	A	0.18	6.8	A	0.08	6.2	A
Southbound		LTR	0.82	28.3	C	0.51	19.6	B	0.73	24.4	C	0.59	21.1	C
Intersection				76.5	E		30.7	C		35.9	D		25.7	C

Analysis Location		Lane Group	Weekday AM			Weekday MD			Weekday PM			Saturday MD		
			V/C Ratio	Delay (spv)	LOS	V/C Ratio	Delay (spv)	LOS	V/C Ratio	Delay (spv)	LOS	V/C Ratio	Delay (spv)	LOS
1	Fifth Ave & 35th St													
Westbound		L	0.83	71.2	E	0.99	102.0	F	1.28	388.1	F	0.83	69.5	E
		T	1.12	253.9	F	0.75	34.4	C	0.91	49.6	mid-D	0.66	29.3	C
Southbound		TR	0.69	14.8	B	0.59	13.2	B	0.63	13.9	B	0.67	14.4	B
Intersection				72.9	E		24.9	C		43.6	D		20.6	C
2	Fifth Ave & 34th St													
Eastbound		T	0.60	23.6	C	0.51	21.1	C	0.47	20.3	C	0.43	19.3	B
		R	0.43	22.3	C	0.41	21.7	C	0.50	24.4	C	0.63	29.9	C
Westbound		T	0.52	19.6	B	0.54	20.0	B	0.63	21.8	C	0.53	19.7	B
Southbound		LTR	0.68	18.2	B	0.63	17.5	B	0.56	16.5	B	0.61	17.0	B
Intersection				19.4	B		18.7	B		18.8	B		18.6	B
3	Fifth Ave & 33rd St													
Westbound		LT	0.81	52.7	mid-D	1.03	202.3	F	0.95	72.9	E	0.78	48.3	mid-D
Southbound		TR	0.72	9.4	A	0.64	8.1	A	0.68	8.9	A	0.73	9.3	A
Intersection				14.9	B		39.7	D		19.1	B		13.6	B
4	Fifth Ave & 31st St													
Westbound		L	0.35	25.6	C	0.32	24.9	C	0.40	26.9	C	0.32	24.8	C
		T	0.86	46.1	mid-D	0.75	37.7	D	0.62	30.8	C	0.95	60.9	E
Southbound		TR	0.76	14.1	B	0.74	13.4	B	0.72	13.2	B	0.82	15.6	B
Intersection				21.1	C		18.2	B		16.9	B		24.9	C
5	Fifth Ave & 30th St													
Eastbound		TR	1.22	332.3	F	1.15	337.4	F	1.26	363.8	F	0.93	59.1	E
Southbound		LT	0.53	9.9	A	0.49	9.5	A	0.54	10.0	A	0.56	10.1	B
Intersection				107.9	F		96.3	F		115.1	F		19.7	B
7	Sixth Ave & 30th St													
Eastbound		LT	1.05	248.1	F	0.93	177.6	F	0.93	177.4	F	0.38	43.9	D
Northbound		TR	0.95	34.9	C	0.85	40.6	D	0.86	26.8	C	0.94	33.3	C
Intersection				94.4	F		76.8	E		66.7	E		34.6	C
8	Sixth Ave & 31st St													
Westbound		TR	0.53	20.5	C	0.56	21.1	C	0.45	19.2	B	0.61	26.0	C
Northbound		LT	0.89	24.6	C	0.81	29.9	C	0.78	19.9	B	0.78	19.9	B
Intersection				23.6	C		27.7	C		19.7	B		21.6	C
9	Sixth Ave & 32nd St													
Eastbound		L	0.45	23.2	C	0.54	25.3	C	0.65	30.7	C	0.45	22.4	C
		T	0.26	17.3	B	0.23	16.8	B	0.22	16.7	B	0.11	15.5	B
Northbound		TR	0.90	25.3	C	0.83	21.7	C	0.87	23.5	C	0.81	20.6	C
Intersection				24.6	C		21.6	C		23.7	C		20.6	C
10	Sixth Ave & 33rd St													
Northbound		L	0.41	20.4	C	0.50	22.1	C	0.42	20.6	C	0.43	20.6	C
		T	0.88	29.1	C	0.76	24.4	C	0.82	26.3	C	0.82	25.9	C
Intersection				28.1	C		24.0	C		25.6	C		25.2	C

Analysis Location		Lane Group	Weekday AM			Weekday MD			Weekday PM			Saturday MD		
			V/C Ratio	Delay (spv)	LOS	V/C Ratio	Delay (spv)	LOS	V/C Ratio	Delay (spv)	LOS	V/C Ratio	Delay (spv)	LOS
11	Sixth Ave / Bdwy & 34th St													
Eastbound		T	1.08	380.2	F	1.07	348.8	F	0.89	53.2	mid-D	1.06	363.7	F
Westbound		TR	1.07	337.0	F	0.94	50.5	mid-D	1.07	337.6	F	0.85	40.1	D
Northbound		T	0.93	35.8	D	0.75	26.3	C	0.80	28.0	C	0.83	28.8	C
Southbound		T	0.71	37.4	D	0.72	37.7	D	0.85	45.1	mid-D	0.63	35.0	C
Intersection				146.2	F		73.3	E		108.7	F		75.5	E
12	Sixth Ave & 35th St													
Westbound		TR	0.74	32.6	C	0.49	22.8	C	0.56	24.0	C	0.47	22.3	C
Northbound		LT	0.63	10.2	B	0.56	12.7	B	0.60	13.3	B	0.61	13.4	B
Intersection				15.6	B		14.8	B		15.9	B		15.2	B
13	Broadway & 35th St													
Westbound		L	0.09	20.6	C	0.09	20.6	C	0.12	21.1	C	0.22	22.6	C
		T	1.12	145.8	F	0.81	42.6	D	1.07	129.2	F	0.76	37.7	D
Southbound		T	0.32	8.4	A	0.32	10.3	B	0.39	8.9	A	0.26	7.9	A
		R	0.30	10.0	A	0.23	8.9	A	0.28	10.0	A	0.38	11.7	B
Intersection				67.6	E		22.0	C		55.2	E		20.5	C
16	Broadway & 33rd St													
Westbound		L	1.05	274.0	F	1.04	240.7	F	1.09	433.0	F	0.81	43.9	D
Southbound		T	0.42	16.2	B	0.43	16.3	B	0.49	17.1	B	0.36	15.4	B
Intersection				97.3	F		90.2	F		141.1	F		25.5	C
17	Broadway & 32nd St													
Eastbound		TR	0.29	17.2	B	0.31	17.4	B	0.34	17.9	B	0.16	15.9	B
Southbound		L	0.43	17.9	B	0.50	19.8	B	0.52	20.3	C	0.59	21.3	C
		T	0.47	15.2	B	0.48	15.4	B	0.53	16.0	B	0.34	13.8	B
Intersection				16.1	B		16.7	B		17.1	B		16.2	B
18	Broadway & 31st St													
Westbound		LT	1.01	102.3	F	0.99	62.6	E	0.76	31.2	C	1.18	321.4	F
Southbound		TR	0.66	19.2	B	0.76	22.8	C	0.81	24.7	C	0.67	20.3	C
Intersection				56.2	E		39.2	D		26.9	C		179.8	F
19	Broadway & 30th St													
Eastbound		TR	0.94	47.3	mid-D	0.83	34.5	C	0.88	38.9	D	0.58	23.6	C
Southbound		LT	0.54	16.6	B	0.58	17.4	B	0.65	18.6	B	0.45	15.4	B
Intersection				32.5	C		25.5	C		27.8	C		19.0	B
22	Seventh Ave & 35th St													
Westbound		L	0.69	34.5	C	0.38	23.7	C	0.25	21.4	C	0.53	28.0	C
		LT	0.79	219.2	F	0.70	33.3	C	1.09	339.0	F	0.63	29.5	C
Southbound		TR	0.70	14.2	B	0.73	20.0	B	0.73	14.6	B	0.58	12.5	B
Intersection				45.7	mid-D		22.0	C		75.2	E		16.3	B

Analysis Location		Lane Group	Weekday AM			Weekday MD			Weekday PM			Saturday MD		
			V/C Ratio	Delay (spv)	LOS	V/C Ratio	Delay (spv)	LOS	V/C Ratio	Delay (spv)	LOS	V/C Ratio	Delay (spv)	LOS
23	Seventh Ave & 34th St													
Eastbound		T	0.87	42.7	D	0.73	31.6	C	0.72	30.9	C	0.45	75.1	E
Westbound		LT	0.77	30.4	C	0.75	29.2	C	0.85	34.7	C	0.52	22.4	C
Southbound		T	0.77	17.1	B	0.71	16.0	B	0.74	16.4	B	0.59	13.9	B
Intersection				24.0	C		21.6	C		23.0	C		26.6	C
24	Seventh Ave & 33rd St													
Westbound		LT	0.94	77.0	E	1.06	316.2	F	0.90	67.7	E	0.80	50.2	mid-D
Southbound		TR	0.90	13.0	B	0.79	8.7	A	0.85	10.7	B	0.66	6.6	A
Intersection				19.4	B		50.3	mid-D		16.5	B		12.5	B
25	Seventh Ave & 32nd St													
Southbound		LT	0.67	5.8	A	0.63	5.4	A	0.62	5.3	A	0.49	4.3	A
Intersection				5.8	A		5.4	A		5.3	A		4.3	A
26	Seventh Ave & 31st St													
Westbound		LT	1.01	104.2	F	1.12	330.5	F	0.97	55.9	E	1.12	304.9	F
Southbound		TR	0.73	17.9	B	0.68	22.3	C	0.67	16.8	B	0.55	15.0	B
Intersection				40.4	D		114.1	F		26.8	C		112.8	F
27	Seventh Ave & 30th St													
Eastbound		T	0.89	45.2	mid-D	0.79	35.6	D	0.79	166.8	F	0.35	20.8	C
		R	0.68	31.5	C	0.33	20.8	C	0.40	105.6	F	0.60	27.3	C
Southbound		LT	0.72	16.1	B	0.61	19.0	B	0.59	14.0	B	0.51	13.0	B
Intersection				23.3	C		22.4	C		51.1	mid-D		15.9	B
34	Eighth Ave & 30th St													
Eastbound		LT	0.89	36.5	D	0.67	122.0	F	0.70	143.6	F	0.62	23.5	C
Northbound		TR	0.65	16.3	B	0.66	18.1	B	0.72	17.6	B	0.59	19.3	B
Intersection				23.3	C		49.0	mid-D		51.8	mid-D		20.5	C
35	Eighth Ave & 31st St													
Westbound		TR	0.61	22.0	C	0.71	25.1	C	0.67	23.6	C	0.70	129.6	F
Northbound		LT	0.73	19.4	B	0.71	19.0	B	0.84	22.6	C	0.72	24.3	C
Intersection				20.1	C		20.7	C		22.9	C		55.7	E
36	Eighth Ave & 33rd St													
Westbound		TR	0.18	11.7	B	0.24	12.3	B	0.33	13.1	B	0.25	12.3	B
Northbound		LT	0.91	33.5	C	0.93	35.5	D	0.97	40.5	D	0.83	40.7	D
Intersection				31.6	C		32.5	C		35.7	D		36.5	D
37	Eighth Ave & 34th St													
Eastbound		T	0.71	27.3	C	0.59	22.8	C	0.58	22.4	C	0.30	16.6	B
Westbound		T	0.38	17.6	B	0.41	18.1	B	0.48	19.0	B	0.48	18.8	B
		R	0.60	26.5	C	0.60	26.8	C	0.68	30.2	C			
Northbound		LTR	0.93	35.8	D	0.90	32.4	C	0.85	29.2	C	0.83	41.0	D
Intersection				30.9	C		28.1	C		26.2	C		31.7	C

Analysis Location		Lane Group	Weekday AM			Weekday MD			Weekday PM			Saturday MD		
			V/C Ratio	Delay (spv)	LOS	V/C Ratio	Delay (spv)	LOS	V/C Ratio	Delay (spv)	LOS	V/C Ratio	Delay (spv)	LOS
38	Eighth Ave & 35th St													
	Westbound	TR	1.16	476.0	F	0.97	60.9	E	1.39	550.9	F	1.18	490.0	F
	Northbound	LT	0.59	10.5	B	0.77	20.3	C	0.60	10.5	B	0.58	10.3	B
	Intersection			100.4	F		28.0	C		136.2	F		101.6	F
48	Ninth Ave & 34th St													
	Eastbound	T	0.80	42.2	D	0.71	35.9	D	0.61	31.5	C	0.69	30.7	C
		R	0.99	88.1	F	0.87	62.3	E	1.19	367.5	F			
	Westbound	DefL	0.62	24.9	C				0.81	42.4	D	0.63	23.9	C
		T	0.49	17.4	B	0.68	21.2	C	0.69	22.8	C	0.27	13.4	B
	Southbound	LTR	0.90	31.0	C	0.89	30.4	C	1.01	89.0	F	0.74	23.9	C
	Intersection			35.0	C		31.3	C		96.0	F		23.8	C
87	Madison Ave & 30th St													
	Eastbound	L	0.48	28.2	C	0.58	31.8	C	0.52	29.4	C	0.48	27.8	C
		T	1.07	250.0	F	0.74	36.2	D	0.86	46.2	mid-D	0.58	29.1	C
	Northbound	TR	0.79	16.7	B	0.81	17.0	B	0.84	18.4	B	0.51	10.2	B
	Intersection			91.0	F		22.9	C		26.3	C		17.4	B
88	Madison Ave & 31st St													
	Westbound	TR	0.59	27.5	C	0.58	27.3	C	0.50	25.7	C	0.62	28.1	C
	Northbound	LT	0.80	17.0	B	0.86	20.0	B	0.92	24.6	C	0.63	12.0	B
	Intersection			20.5	C		22.0	C		24.8	C		18.1	B
89	Madison Ave & 32nd St													
	Eastbound	L	0.56	31.3	C	0.61	32.2	C	0.67	35.9	D	0.77	42.0	D
		T	0.68	32.6	C	0.57	27.5	C	0.60	28.8	C	0.18	20.1	C
	Northbound	TR	0.63	13.2	B	0.62	12.8	B	0.65	13.2	B	0.43	10.3	B
	Intersection			19.0	B		17.4	B		18.5	B		17.6	B
90	Madison Ave & 33rd St													
	Westbound	T	0.22	19.5	B	0.30	20.6	C	0.25	19.9	B	0.19	19.0	B
		R	0.24	20.7	C	0.60	31.9	C	0.38	23.9	C	0.12	18.4	B
	Northbound	LT	0.63	14.6	B	0.72	16.0	B	0.79	18.1	B	0.54	13.0	B
	Intersection			15.3	B		18.0	B		18.7	B		13.7	B
91	Madison Ave & 34th St													
	Eastbound	L	0.76	69.5	E	0.24	24.6	C	0.41	35.0	C	0.75	71.2	E
		T	0.84	40.0	D	0.81	37.3	D	0.63	27.9	C	0.62	27.3	C
	Westbound	T	0.94	51.2	mid-D	0.92	47.3	mid-D	1.05	182.6	F	0.97	55.5	E
		R	0.34	22.9	C	0.34	22.6	C	0.54	29.3	C	0.26	21.1	C
	Northbound	LTR	0.62	14.5	B	0.85	21.1	C	0.86	22.2	C	0.50	12.5	B
	Intersection			31.7	C		30.2	C		65.4	E		30.4	C

Analysis Location		Lane Group	Weekday AM			Weekday MD			Weekday PM			Saturday MD		
			V/C Ratio	Delay (spv)	LOS	V/C Ratio	Delay (spv)	LOS	V/C Ratio	Delay (spv)	LOS	V/C Ratio	Delay (spv)	LOS
92	Madison Ave & 35th St													
Westbound		T	1.25	281.7	F	0.80	33.4	C	1.00	68.2	E	0.86	42.2	D
		R	0.88	81.0	F	0.80	58.2	E	1.08	427.2	F	0.52	45.3	mid-D
Northbound		LT	0.40	11.3	B	0.52	16.1	B	0.48	12.0	B	0.35	10.8	B
Intersection				114.1	F		24.7	C		67.5	E		22.3	C
93	Fifth Ave & 32nd St													
Eastbound		T	0.69	34.1	C	0.60	29.9	C	0.63	31.1	C	0.40	24.9	C
		R	0.48	30.8	C	0.51	31.3	C	0.50	30.8	C	0.56	33.2	C
Southbound		LT	0.82	15.7	B	0.75	13.5	B	0.80	15.5	B	0.77	13.7	B
Intersection				19.4	B		17.2	B		19.0	B		16.0	B
96	Park Ave & 34th St													
Eastbound		T	0.81	37.3	D	0.80	37.2	D	0.64	28.8	C	0.57	26.1	C
		R	0.28	22.3	C	0.34	23.7	C	0.26	21.8	C	0.10	18.5	B
Westbound		T	1.13	229.4	F	1.07	217.8	F	1.05	203.4	F	1.06	194.9	F
		R	0.26	21.1	C	0.21	20.3	C	0.40	24.1	C	0.29	22.1	C
Northbound		TR	0.55	17.1	B	0.59	17.7	B	0.64	18.8	B	0.48	16.0	B
Southbound		TR	0.69	20.0	B	0.71	20.7	C	0.75	21.7	C	0.57	17.4	B
Intersection				66.3	E		59.1	E		55.8	E		61.4	E
97	Lexington Ave & 34th St													
Eastbound		T	0.70	29.8	C	0.78	33.7	C	0.62	27.0	C	0.63	26.8	C
		R	0.46	26.4	C	0.40	24.5	C	0.30	21.9	C	0.27	21.2	C
Westbound		T	1.13	216.1	F	0.53	23.3	C	1.03	184.0	F	1.05	185.5	F
Southbound		LT	1.04	124.0	F	0.76	17.2	B	0.71	16.1	B	0.56	13.2	B
		R	0.38	20.6	C	0.32	12.7	B	0.96	77.1	E	0.50	26.2	C
Intersection				125.4	F		21.9	C		63.1	E		65.2	E
98	Third Ave & 34th St													
Eastbound		L	0.43	22.0	C	0.53	23.9	C	0.43	21.3	C	0.42	21.9	C
		T	0.72	27.5	C	0.69	26.3	C	0.54	21.6	C	0.59	22.4	C
Westbound		TR	0.88	45.2	mid-D	0.77	37.1	D	0.75	36.4	D	0.94	52.7	mid-D
Northbound		LTR	0.73	19.4	B	0.78	20.4	C	0.89	24.5	C	0.76	19.7	B
Intersection				26.2	C		24.4	C		26.0	C		27.1	C
99	Ramp from I-495 & 34th St													
Eastbound		T	0.31	4.5	A	0.30	4.5	A	0.25	4.2	A	0.31	4.6	A
Westbound		T	0.41	23.8	C	0.34	22.8	C	0.38	24.1	C	0.44	24.4	C
Southbound		L	0.85	81.6	F	0.66	58.6	E	0.58	52.2	mid-D	1.09	371.2	F
		R	0.27	11.7	B	0.23	11.3	B	0.18	10.3	B	0.32	12.2	B
Intersection				17.8	B		14.4	B		14.9	B		53.8	mid-D

Analysis Location		Lane Group	Weekday AM			Weekday MD			Weekday PM			Saturday MD		
			V/C Ratio	Delay (spv)	LOS	V/C Ratio	Delay (spv)	LOS	V/C Ratio	Delay (spv)	LOS	V/C Ratio	Delay (spv)	LOS
100	Second Ave & 34th St													
Eastbound		T	0.75	36.1	D	0.78	37.8	D	0.64	32.7	C	0.76	36.2	D
		R	1.06	346.3	F	0.80	64.8	E	0.69	52.2	mid-D	0.78	57.5	E
Westbound		DefL	0.68	41.0	D	0.45	31.2	C	0.43	27.9	C	0.36	28.9	C
		T	0.43	20.5	C	0.37	19.5	B	0.34	19.1	B	0.41	20.0	B
Southbound		L	0.71	22.2	C	0.40	14.7	B	0.48	16.0	B	0.37	15.6	B
		LTR	0.93	24.9	C	0.75	17.8	B	0.86	21.0	C	0.78	18.4	B
Intersection				37.9	D		23.2	C		23.1	C		23.3	C
101	Ramp to I-495 & 34th St													
Eastbound		L	0.39	14.5	B	0.47	15.5	B	0.31	12.8	B	0.51	16.1	B
		LTR	0.68	17.7	B	0.48	13.8	B	0.49	14.0	B	0.39	12.7	B
Westbound		LT	0.93	61.9	E	0.72	42.6	D	0.65	39.7	D	0.73	43.3	D
		R	1.01	143.1	F	1.04	281.7	F	1.10	511.9	F	0.76	64.3	E
Northbound		LTR	0.11	37.5	D	0.11	37.5	D	0.18	39.5	D	0.11	37.5	D
Intersection				39.7	D		49.0	mid-D		78.7	E		26.7	C
102	First Ave & 34th St													
Eastbound		LT	1.10	261.8	F	0.84	35.2	D	0.88	38.5	D	0.70	28.1	C
Westbound		TR	0.71	35.3	D	0.53	31.0	C	0.59	32.2	C	0.47	30.0	C
Northbound		LTR	0.75	20.4	C	0.71	19.6	B	0.76	20.7	C	0.57	17.4	B
Intersection				87.0	F		25.0	C		26.5	C		22.0	C
103	FDR Drive & 34th St													
Eastbound		L	1.07	347.9	F	1.00	94.0	F	1.04	243.2	F	0.89	69.7	E
		LTR	0.94	73.8	E	0.75	48.9	mid-D	0.78	51.9	mid-D	0.45	35.0	C
		R	0.87	39.1	D	0.67	26.2	C	0.68	26.4	C	0.53	21.7	C
Westbound		LTR	0.09	26.8	C	0.04	26.2	C	0.14	27.5	C	0.02	25.9	C
Northbound		L	1.15	212.1	F	0.67	15.9	B	0.97	55.7	E	0.65	15.8	B
		TR	0.29	7.7	A	0.11	6.4	A	0.18	6.9	A	0.08	6.2	A
Southbound		LTR	0.86	30.3	C	0.53	19.9	B	0.74	25.0	C	0.60	21.4	C
Intersection				88.4	F		31.7	C		52.4	mid-D		26.5	C

Analysis Location		Lane Group	Weekday AM (Single-Tenant)						Weekday MD (Multi-Tenant)						Weekday PM (Multi-Tenant)						Saturday MD (Multi-Tenant)					
			2014 Build			2014 Build with Mitigation			2014 Build			2014 Build with Mitigation			2014 Build			2014 Build with Mitigation			2014 Build			2014 Build with Mitigation		
			V/C Ratio	Delay (spv)	LOS	V/C Ratio	Delay (spv)	LOS	V/C Ratio	Delay (spv)	LOS	V/C Ratio	Delay (spv)	LOS	V/C Ratio	Delay (spv)	LOS	V/C Ratio	Delay (spv)	LOS	V/C Ratio	Delay (spv)	LOS	V/C Ratio	Delay (spv)	LOS
1	Fifth Ave & 35th St																									
	Westbound	L	0.92	87.1	F	0.81	63.6	E	1.04	195.0	F	0.91	78.7	E	1.35	413.9	F	1.09	280.3	F	0.88	77.9	E	0.77	58.4	E
		T	1.18	279.2	F	1.12	245.4	F	0.82	39.4	D	0.78	34.1	C	0.96	60.0	E	0.91	48.4	mid-D	0.72	31.7	C	0.68	28.4	C
	Southbound	TR	0.69	14.9	B	0.73	17.1	B	0.59	13.3	B	0.62	15.2	B	0.63	14.0	B	0.66	16.0	B	0.68	14.6	B	0.72	16.7	B
	Intersection			82.1	F		74.0	E		34.8	C		24.6	C		48.5	mid-D		39.3	D		22.0	C		21.6	C
2	Fifth Ave & 34th St																									
	Eastbound	T	0.60	23.6	C	0.60	23.6	C	0.53	21.7	C	0.53	21.7	C	0.51	21.3	C	0.51	21.3	C	0.45	19.7	B	0.45	19.7	B
		R	0.43	22.3	C	0.43	22.3	C	0.41	21.7	C	0.41	21.7	C	0.50	24.4	C	0.50	24.4	C	0.63	29.9	C	0.63	29.9	C
	Westbound	T	0.53	19.8	B	0.53	19.8	B	0.55	20.1	C	0.55	20.1	C	0.64	21.9	C	0.64	21.9	C	0.54	19.9	B	0.54	19.9	B
	Southbound	LTR	0.69	18.4	B	0.69	18.4	B	0.64	17.6	B	0.64	17.6	B	0.57	16.6	B	0.57	16.6	B	0.62	17.1	B	0.62	17.1	B
	Intersection			19.6	B		19.6	B		18.9	B		18.9	B		19.0	B		19.0	B		18.8	B		18.8	B
3	Fifth Ave & 33rd St																									
	Westbound	LT	0.84	55.4	E	0.84	55.4	E	1.05	286.6	F	1.05	286.6	F	0.96	76.0	E	0.96	76.0	E	0.78	49.0	mid-D	0.78	49.0	mid-D
	Southbound	TR	0.74	9.9	A	0.74	9.9	A	0.65	8.3	A	0.65	8.3	A	0.69	9.0	A	0.69	9.0	A	0.74	9.5	A	0.74	9.5	A
	Intersection			15.8	B		15.8	B		53.6	mid-D		53.6	mid-D		19.8	B		19.8	B		13.9	B		13.9	B
4	Fifth Ave & 31st St																									
	Westbound	L	0.35	25.6	C	0.35	25.6	C	0.32	24.9	C	0.32	24.9	C	0.40	26.9	C	0.40	26.9	C	0.32	24.8	C	0.32	24.8	C
		T	0.86	46.1	mid-D	0.86	46.1	mid-D	0.76	37.9	D	0.76	37.9	D	0.62	30.8	C	0.62	30.8	C	0.95	60.9	E	0.95	60.9	E
	Southbound	TR	0.76	14.1	B	0.76	14.1	B	0.74	13.4	B	0.74	13.4	B	0.73	13.2	B	0.73	13.2	B	0.83	15.7	B	0.83	15.7	B
	Intersection			21.1	C		21.1	C		18.3	B		18.3	B		16.9	B		16.9	B		25.0	C		25.0	C
5	Fifth Ave & 30th St																									
	Eastbound	TR	1.23	333.1	F	1.23	333.1	F	1.17	343.7	F	1.13	321.4	F	1.29	380.1	F	1.25	355.0	F	0.95	62.0	E	0.95	62.0	E
	Southbound	LT	0.53	9.9	A	0.53	9.9	A	0.50	9.5	A	0.51	10.3	B	0.54	10.0	A	0.55	10.8	B	0.56	10.1	B	0.56	10.1	B
	Intersection			108.3	F		108.3	F		98.7	F		93.3	F		121.7	F		114.7	F		20.4	C		20.4	C
7	Sixth Ave & 30th St																									
	Eastbound	LT	1.08	256.3	F	0.36	15.9	B	0.96	196.4	F	0.38	21.4	C	0.95	187.8	F	0.33	18.8	B	0.39	44.8	D	0.20	19.8	B
		T				0.68	22.5	C				0.55	31.5	C				0.59	35.9	D				0.18	18.8	B
	Northbound	TR	0.96	36.5	D	0.96	36.5	D	0.86	41.8	D	0.86	41.8	D	0.86	27.0	C	0.86	27.0	C	0.95	34.3	C	0.95	34.3	C
	Intersection			98.2	F		32.0	C		83.3	F		38.1	D		70.0	E		27.9	C		35.5	D		32.5	C
8	Sixth Ave & 31st St																									
	Westbound	TR	0.53	20.5	C	0.53	20.5	C	0.56	21.1	C	0.56	21.1	C	0.45	19.2	B	0.45	19.2	B	0.61	26.0	C	0.61	26.0	C
	Northbound	LT	0.91	25.7	C	0.91	25.7	C	0.82	31.2	C	0.82	31.2	C	0.79	20.1	C	0.79	20.1	C	0.79	20.1	C	0.79	20.1	C
	Intersection			24.5	C		24.5	C		28.7	C		28.7	C		19.9	B		19.9	B		21.8	C		21.8	C
9	Sixth Ave & 32nd St																									
	Eastbound	L	0.49	24.3	C	0.49	24.3	C	0.59	27.2	C	0.59	27.2	C	0.70	33.3	C	0.70	33.3	C	0.49	23.6	C	0.49	23.6	C
		T	0.27	17.4	B	0.27	17.4	B	0.25	17.1	B	0.25	17.1	B	0.23	16.9	B	0.23	16.9	B	0.14	15.9	B	0.14	15.9	B
	Northbound	TR	0.91	26.1	C	0.91	26.1	C	0.84	22.1	C	0.84	22.1	C	0.88	23.8	C	0.88	23.8	C	0.82	20.8	C	0.82	20.8	C
	Intersection			25.4	C		25.4	C		22.2	C		22.2	C		24.2	C		24.2	C		20.9	C		20.9	C
10	Sixth Ave & 33rd St																									
	Northbound	L	0.42	20.6	C	0.42	20.6	C	0.53	22.8	C	0.53	22.8	C	0.43	20.8	C	0.43	20.8	C	0.44	20.8	C	0.44	20.8	C
		T	0.89	29.4	C	0.89	29.4	C	0.77	24.6	C	0.77	24.6	C	0.83	26.5	C	0.83	26.5	C	0.82	26.1	C	0.82	26.1	C
	Intersection			28.4	C		28.4	C		24.3	C		24.3	C		25.8	C		25.8	C		25.4	C		25.4	C
11	Sixth Ave / Bdwy & 34th St																									
	Eastbound	T	1.08	380.2	F	1.01	115.0	F	1.11	428.8	F	1.03	191.1	F	0.95	62.3	E	0.88	49.3	mid-D	1.10	393.8	F	1.02	331.0	F
	Westbound	TR	1.09	413.4	F	1.01	103.1	F	0.95	52.8	mid-D	0.89	41.9	D	1.08	376.8	F	1.01	100.6	F	0.87	41.1	D	0.81	35.4	D
	Northbound	T	0.93	36.4	D	0.97	41.7	D	0.75	26.5	C	0.78	28.0	C	0.81	28.3	C	0.87	32.4	C	0.83	29.0	C	0.86	31.2	C
	Southbound	T	0.73	38.1	D	0.76	40.6	D	0.73	38.0	D	0.76	40.5	D	0.86	45.6	mid-D	0.86	45.6	mid-D	0.64	35.2	D	0.67	37.0	D
	Intersection			163.5	F		64.4	E		84.8	F		53.7	mid-D		119.1	F		53.1	mid-D		80.8	F		72.6	E
12	Sixth Ave & 35th St																									
	Westbound	TR	0.75	32.9	C	0.75	32.9	C	0.54	23.7	C	0.54	23.7	C	0.63	25.5	C	0.63	25.5	C	0.52	23.1	C	0.52	23.1	C
	Northbound	LT	0.64	10.3	B	0.64	10.3	B	0.56	12.8	B	0.56	12.8	B	0.61	13.4	B	0.61	13.4	B	0.62	13.5	B	0.62	13.5	B
	Intersection			15.7	B		15.7	B		15.2	B		15.2	B		16.4	B		16.4	B		15.6	B		15.6	B

Analysis Location		Lane Group	Weekday AM (Single-Tenant)						Weekday MD (Multi-Tenant)						Weekday PM (Multi-Tenant)						Saturday MD (Multi-Tenant)					
			2014 Build			2014 Build with Mitigation			2014 Build			2014 Build with Mitigation			2014 Build			2014 Build with Mitigation			2014 Build			2014 Build with Mitigation		
			V/C Ratio	Delay (spv)	LOS	V/C Ratio	Delay (spv)	LOS	V/C Ratio	Delay (spv)	LOS	V/C Ratio	Delay (spv)	LOS	V/C Ratio	Delay (spv)	LOS	V/C Ratio	Delay (spv)	LOS	V/C Ratio	Delay (spv)	LOS	V/C Ratio	Delay (spv)	LOS
13	Broadway & 35th St																									
	Westbound	L	0.09	20.6	C	0.08	19.1	B	0.09	20.6	C	0.08	19.1	B	0.12	21.1	C	0.11	19.6	B	0.22	22.6	C	0.22	22.6	C
		T	1.14	152.8	F	1.07	124.2	F	0.86	48.3	mid-D	0.81	40.7	D	1.11	144.0	F	1.05	117.8	F	0.81	41.6	D	0.81	41.6	D
	Southbound	T	0.33	8.4	A	0.34	9.8	A	0.33	10.4	B	0.34	11.9	B	0.39	8.9	A	0.41	10.4	B	0.26	8.0	A	0.26	8.0	A
		R	0.30	10.1	B	0.32	11.7	B	0.25	9.2	A	0.26	10.6	B	0.31	10.3	B	0.33	12.0	B	0.40	12.2	B	0.40	12.2	B
	Intersection			70.4	E		58.9	E		24.4	C		22.5	C		61.6	E		52.3	mid-D		22.3	C		22.3	C
16	Broadway & 33rd St																									
	Westbound	L	1.05	274.0	F	1.05	274.0	F	1.12	555.2	F	1.00	81.1	F	1.24	693.0	F	1.09	432.4	F	0.86	50.0	mid-D	0.80	41.5	D
	Southbound	T	0.43	16.3	B	0.43	16.3	B	0.44	16.4	B	0.47	19.3	B	0.49	17.1	B	0.54	20.2	C	0.36	15.5	B	0.38	17.2	B
	Intersection			96.0	F		96.0	F		200.7	F		40.4	D		236.4	F		153.9	F		28.1	C		26.1	C
17	Broadway & 32nd St																									
	Eastbound	TR	0.30	17.3	B	0.30	17.3	B	0.33	17.6	B	0.33	17.6	B	0.36	18.1	B	0.36	18.1	B	0.18	16.0	B	0.18	16.0	B
	Southbound	L	0.47	19.0	B	0.47	19.0	B	0.56	21.8	C	0.56	21.8	C	0.60	23.2	C	0.60	23.2	C	0.63	22.9	C	0.63	22.9	C
		T	0.47	15.2	B	0.47	15.2	B	0.49	15.5	B	0.49	15.5	B	0.54	16.2	B	0.54	16.2	B	0.34	13.8	B	0.34	13.8	B
	Intersection			16.4	B		16.4	B		17.1	B		17.1	B		17.8	B		17.8	B		16.7	B		16.7	B
18	Broadway & 31st St																									
	Westbound	LT	1.01	102.3	F	1.01	102.3	F	0.99	63.1	E	0.99	63.1	E	0.76	31.2	C	0.76	31.2	C	1.18	321.4	F	1.18	321.4	F
	Southbound	TR	0.66	19.2	B	0.66	19.2	B	0.77	23.2	C	0.77	23.2	C	0.83	25.5	C	0.83	25.5	C	0.68	20.5	C	0.68	20.5	C
	Intersection			56.2	E		56.2	E		39.5	D		39.5	D		27.3	C		27.3	C		178.6	F		178.6	F
19	Broadway & 30th St																									
	Eastbound	TR	0.94	47.6	mid-D	0.94	47.6	mid-D	0.84	35.2	D	0.84	35.2	D	0.89	40.0	D	0.89	40.0	D	0.59	23.8	C	0.59	23.8	C
	Southbound	LT	0.54	16.6	B	0.54	16.6	B	0.59	17.7	B	0.59	17.7	B	0.67	19.1	B	0.67	19.1	B	0.46	15.5	B	0.46	15.5	B
	Intersection			32.7	C		32.7	C		25.9	C		25.9	C		28.5	C		28.5	C		19.1	B		19.1	B
22	Seventh Ave & 35th St																									
	Westbound	L	0.72	36.3	D	0.72	36.3	D	0.47	26.0	C	0.47	26.0	C	0.34	23.1	C	0.34	23.1	C	0.63	31.9	C	0.63	31.9	C
		LT	0.79	219.2	F	0.79	219.2	F	0.70	33.3	C	0.70	33.3	C	1.09	339.0	F	1.09	339.0	F	0.63	29.5	C	0.63	29.5	C
	Southbound	TR	0.71	14.4	B	0.71	14.4	B	0.74	20.7	C	0.74	20.7	C	0.74	14.9	B	0.74	14.9	B	0.60	12.7	B	0.60	12.7	B
	Intersection			45.6	mid-D		45.6	mid-D		22.7	C		22.7	C		74.0	E		74.0	E		17.0	B		17.0	B
23	Seventh Ave & 34th St																									
	Eastbound	T	0.87	42.7	D	0.87	42.7	D	0.75	33.0	C	0.75	33.0	C	0.76	33.2	C	0.76	33.2	C	0.46	76.5	E	0.46	76.5	E
	Westbound	LT	0.79	31.2	C	0.79	31.2	C	0.77	29.8	C	0.77	29.8	C	0.87	36.3	D	0.87	36.3	D	0.53	22.6	C	0.53	22.6	C
	Southbound	T	0.78	17.5	B	0.78	17.5	B	0.74	16.6	B	0.74	16.6	B	0.77	16.9	B	0.77	16.9	B	0.61	14.2	B	0.61	14.2	B
	Intersection			24.3	C		24.3	C		22.2	C		22.2	C		24.0	C		24.0	C		27.0	C		27.0	C
24	Seventh Ave & 33rd St																									
	Westbound	LT	0.97	83.7	F	0.87	61.9	E	1.15	622.0	F	1.05	279.7	F	0.92	72.9	E	0.85	57.5	E	0.82	53.2	mid-D	0.82	53.2	mid-D
	Southbound	TR	0.92	14.5	B	0.95	19.8	B	0.82	9.6	A	0.85	12.1	B	0.88	11.9	B	0.91	15.7	B	0.69	7.0	A	0.69	7.0	A
	Intersection			21.5	C		24.0	C		94.1	F		49.0	mid-D		18.1	B		19.9	B		13.2	B		13.2	B
25	Seventh Ave & 32nd St																									
	Southbound	LT	0.68	5.9	A	0.68	5.9	A	0.66	5.8	A	0.66	5.8	A	0.65	5.6	A	0.65	5.6	A	0.52	4.5	A	0.52	4.5	A
	Intersection			5.9	A		5.9	A		5.8	A		5.8	A		5.6	A		5.6	A		4.5	A		4.5	A
26	Seventh Ave & 31st St																									
	Westbound	LT	1.01	104.2	F	1.01	104.2	F	1.13	333.8	F	1.10	316.0	F	0.99	60.9	E	0.96	53.6	mid-D	1.13	308.5	F	1.10	291.9	F
	Southbound	TR	0.73	18.0	B	0.73	18.0	B	0.71	23.6	C	0.73	25.3	C	0.69	17.2	B	0.71	18.3	B	0.57	15.2	B	0.59	16.2	B
	Intersection			40.4	D		40.4	D		114.3	F		110.3	F		28.3	C		27.3	C		112.9	F		108.0	F
27	Seventh Ave & 30th St																									
	Eastbound	T	0.91	49.2	mid-D	0.91	49.2	mid-D	0.82	37.9	D	0.82	37.9	D	0.79	171.8	F	0.77	154.3	F	0.37	21.0	C	0.37	21.0	C
		R	0.68	31.5	C	0.68	31.5	C	0.33	20.8	C	0.33	20.8	C	0.40	105.6	F	0.38	97.5	F	0.60	27.3	C	0.60	27.3	C
	Southbound	LT	0.72	16.2	B	0.72	16.2	B	0.62	19.2	B	0.62	19.2	B	0.61	14.2	B	0.62	15.2	B	0.52	13.0	B	0.52	13.0	B
	Intersection			24.2	C		24.2	C		23.2	C		23.2	C		51.9	mid-D		48.6	mid-D		15.9	B		15.9	B
34	Eighth Ave & 30th St																									
	Eastbound	LT	0.92	39.7	D	0.92	39.7	D	0.69	127.7	F	0.67	116.2	F	0.71	148.3	F	0.69	133.5	F	0.64	23.9	C	0.64	23.9	C
	Northbound	TR	0.65	16.4	B	0.65	16.4	B	0.67	18.2	B	0.69	19.3	B	0.72	17.7	B	0.74	18.8	B	0.59	19.4	B	0.59	19.4	B
	Intersection			24.5	C		24.5	C		51.1	mid-D		48.5	mid-D		53.4	mid-D		50.2	mid-D		20.7	C		20.7	C

Analysis Location	Lane Group	Weekday AM (Single-Tenant)						Weekday MD (Multi-Tenant)						Weekday PM (Multi-Tenant)						Saturday MD (Multi-Tenant)					
		2014 Build			2014 Build with Mitigation			2014 Build			2014 Build with Mitigation			2014 Build			2014 Build with Mitigation			2014 Build			2014 Build with Mitigation		
		V/C Ratio	Delay (spv)	LOS	V/C Ratio	Delay (spv)	LOS	V/C Ratio	Delay (spv)	LOS	V/C Ratio	Delay (spv)	LOS	V/C Ratio	Delay (spv)	LOS	V/C Ratio	Delay (spv)	LOS	V/C Ratio	Delay (spv)	LOS	V/C Ratio	Delay (spv)	LOS
35 Eighth Ave & 31st St																									
Westbound	TR	0.61	22.1	C	0.61	22.1	C	0.75	26.7	C	0.75	26.7	C	0.70	24.5	C	0.70	24.5	C	0.73	141.3	F	0.71	126.9	F
Northbound	LT	0.74	19.6	B	0.74	19.6	B	0.72	19.2	B	0.72	19.2	B	0.85	22.9	C	0.85	22.9	C	0.72	24.5	C	0.74	26.3	C
Intersection			20.2	C		20.2	C		21.4	C		21.4	C		23.3	C		23.3	C		59.9	E		56.8	E
36 Eighth Ave & 33rd St																									
Westbound	TR	0.18	11.7	B	0.18	11.7	B	0.24	12.3	B	0.24	12.3	B	0.33	13.1	B	0.33	13.1	B	0.25	12.3	B	0.25	12.3	B
Northbound	LT	0.93	34.7	C	0.93	34.7	C	0.96	38.4	D	0.96	38.4	D	0.98	43.7	D	0.98	43.7	D	0.85	42.9	D	0.85	42.9	D
Intersection			32.7	C		32.7	C		35.2	D		35.2	D		38.5	D		38.5	D		38.5	D		38.5	D
37 Eighth Ave & 34th St																									
Eastbound	T	0.75	29.4	C	0.75	29.4	C	0.61	23.3	C	0.61	23.3	C	0.59	22.8	C	0.59	22.8	C	0.31	16.7	B	0.31	16.7	B
Westbound	T	0.38	17.6	B	0.38	17.6	B	0.42	18.1	B	0.42	18.1	B	0.49	19.2	B	0.49	19.2	B	0.50	19.0	B	0.50	19.0	B
	R	0.60	26.5	C	0.60	26.5	C	0.63	28.0	C	0.63	28.0	C	0.73	33.6	C	0.73	33.6	C						
Northbound	LTR	0.94	37.1	D	0.94	37.1	D	0.92	34.3	C	0.92	34.3	C	0.86	30.0	C	0.86	30.0	C	0.85	43.2	D	0.85	43.2	D
Intersection			32.0	C		32.0	C		29.5	C		29.5	C		27.1	C		27.1	C		33.1	C		33.1	C
38 Eighth Ave & 35th St																									
Westbound	TR	1.16	476.0	F	1.16	476.0	F	0.97	60.9	E	0.97	60.9	E	1.39	550.9	F	1.39	550.9	F	1.18	490.0	F	1.18	490.0	F
Northbound	LT	0.59	10.5	B	0.59	10.5	B	0.78	20.7	C	0.78	20.7	C	0.61	10.7	B	0.61	10.7	B	0.59	10.4	B	0.59	10.4	B
Intersection			100.3	F		100.3	F		28.2	C		28.2	C		134.2	F		134.2	F		100.3	F		100.3	F
48 Ninth Ave & 34th St																									
Eastbound	T	0.89	52.4	mid-D	0.81	40.1	D	0.75	38.3	D	0.75	38.3	D	0.65	32.7	C	0.65	32.7	C	0.71	31.2	C	0.71	31.2	C
	R	0.99	88.1	F	0.88	59.5	E	0.87	62.3	E	0.87	62.3	E	1.19	367.5	F	1.19	367.5	F						
Westbound	DefL	0.66	27.4	C	0.60	22.2	C							0.84	46.3	mid-D	0.84	46.3	mid-D	0.65	24.9	C	0.65	24.9	C
	T	0.49	17.4	B	0.46	15.1	B	0.70	22.2	C	0.70	22.2	C	0.73	24.8	C	0.73	24.8	C	0.28	13.6	B	0.28	13.6	B
Southbound	LTR	0.90	31.5	C	0.33	33.6	C	0.89	30.6	C	0.83	26.8	C	1.01	89.5	F	0.78	46.9	mid-D	0.74	23.9	C	0.69	22.6	C
Intersection			36.9	D		33.3	C		31.8	C		29.4	C		95.9	F		61.5	E		24.0	C		23.2	C
87 Madison Ave & 30th St																									
Eastbound	L	0.48	28.2	C	0.48	28.2	C	0.58	31.8	C	0.58	31.8	C	0.52	29.4	C	0.52	29.4	C	0.48	27.8	C	0.48	27.8	C
	T	1.07	250.7	F	1.07	250.7	F	0.75	37.0	D	0.75	37.0	D	0.88	48.0	mid-D	0.88	48.0	mid-D	0.59	29.4	C	0.59	29.4	C
Northbound	TR	0.79	16.7	B	0.79	16.7	B	0.81	17.0	B	0.81	17.0	B	0.84	18.4	B	0.84	18.4	B	0.51	10.2	B	0.51	10.2	B
Intersection			91.4	F		91.4	F		23.1	C		23.1	C		26.9	C		26.9	C		17.6	B		17.6	B
88 Madison Ave & 31st St																									
Westbound	TR	0.61	27.8	C	0.61	27.8	C	0.58	27.4	C	0.58	27.4	C	0.51	25.8	C	0.51	25.8	C	0.63	28.3	C	0.63	28.3	C
Northbound	LT	0.80	17.0	B	0.80	17.0	B	0.86	20.0	B	0.86	20.0	B	0.92	24.6	C	0.92	24.6	C	0.63	12.0	B	0.63	12.0	B
Intersection			20.7	C		20.7	C		22.1	C		22.1	C		24.9	C		24.9	C		18.2	B		18.2	B
89 Madison Ave & 32nd St																									
Eastbound	L	0.58	31.9	C	0.58	31.9	C	0.67	35.3	D	0.67	35.3	D	0.77	43.6	D	0.77	43.6	D	0.83	47.8	mid-D	0.77	39.8	D
	T	0.69	32.7	C	0.69	32.7	C	0.58	28.0	C	0.58	28.0	C	0.63	30.0	C	0.63	30.0	C	0.20	20.4	C	0.19	18.9	B
Northbound	TR	0.64	13.3	B	0.64	13.3	B	0.63	12.8	B	0.63	12.8	B	0.65	13.2	B	0.65	13.2	B	0.43	10.4	B	0.45	11.9	B
Intersection			19.2	B		19.2	B		18.1	B		18.1	B		20.1	C		20.1	C		19.2	B		18.5	B
90 Madison Ave & 33rd St																									
Westbound	T	0.22	19.5	B	0.22	19.5	B	0.30	20.6	C	0.30	20.6	C	0.25	19.9	B	0.25	19.9	B	0.19	19.0	B	0.19	19.0	B
	R	0.24	20.7	C	0.24	20.7	C	0.60	31.9	C	0.60	31.9	C	0.38	23.9	C	0.38	23.9	C	0.12	18.4	B	0.12	18.4	B
Northbound	LT	0.64	14.7	B	0.64	14.7	B	0.73	16.3	B	0.73	16.3	B	0.81	18.8	B	0.81	18.8	B	0.56	13.2	B	0.56	13.2	B
Intersection			15.5	B		15.5	B		18.2	B		18.2	B		19.3	B		19.3	B		13.8	B		13.8	B
91 Madison Ave & 34th St																									
Eastbound	L	0.80	80.0	E	0.73	63.8	E	0.25	25.5	C	0.25	25.5	C	0.41	35.0	C	0.41	34.4	C	0.75	71.2	E	0.75	70.6	E
	T	0.84	40.0	D	0.81	37.0	D	0.83	39.4	D	0.83	39.4	D	0.67	29.7	C	0.65	28.1	C	0.67	28.9	C	0.65	27.5	C
Westbound	T	0.96	56.2	E	0.94	49.9	mid-D	0.94	50.6	mid-D	0.94	50.6	mid-D	1.06	186.3	F	1.03	173.3	F	0.99	59.8	E	0.96	52.9	mid-D
	R	0.41	24.8	C	0.39	23.6	C	0.38	23.6	C	0.38	23.6	C	0.57	30.6	C	0.55	28.8	C	0.32	22.5	C	0.30	21.4	C
Northbound	LTR	0.62	14.5	B	0.64	15.6	B	0.87	22.3	C	0.87	22.3	C	0.89	24.1	C	0.91	27.1	C	0.51	12.7	B	0.53	13.5	B
Intersection			33.5	C		31.1	C		32.0	C		32.0	C		67.1	E		65.0	E		32.0	C		30.0	C

Analysis Location		Lane Group	Weekday AM (Single-Tenant)						Weekday MD (Multi-Tenant)						Weekday PM (Multi-Tenant)						Saturday MD (Multi-Tenant)					
			2014 Build			2014 Build with Mitigation			2014 Build			2014 Build with Mitigation			2014 Build			2014 Build with Mitigation			2014 Build			2014 Build with Mitigation		
			V/C Ratio	Delay (spv)	LOS	V/C Ratio	Delay (spv)	LOS	V/C Ratio	Delay (spv)	LOS	V/C Ratio	Delay (spv)	LOS	V/C Ratio	Delay (spv)	LOS	V/C Ratio	Delay (spv)	LOS	V/C Ratio	Delay (spv)	LOS	V/C Ratio	Delay (spv)	LOS
92	Madison Ave & 35th St																									
Westbound		T	1.31	306.7	F	1.24	269.4	F	0.86	38.1	D	0.86	38.1	D	1.05	208.4	F	1.00	65.1	E	0.91	47.9	mid-D	0.86	39.8	D
		R	0.88	81.0	F	0.77	60.5	E	0.80	58.2	E	0.80	58.2	E	1.08	427.2	F	0.95	89.0	F	0.52	45.3	mid-D	0.46	40.3	D
Northbound		LT	0.41	11.4	B	0.43	13.0	B	0.53	16.2	B	0.53	16.2	B	0.49	12.1	B	0.51	13.8	B	0.36	10.9	B	0.37	12.4	B
Intersection				125.0	F		110.5	F		26.0	C		26.0	C		104.6	F		34.8	C		24.3	C		22.4	C
93	Fifth Ave & 32nd St																									
Eastbound		T	0.70	34.5	C	0.70	34.5	C	0.66	31.9	C	0.66	31.9	C	0.72	35.1	D	0.72	35.1	D	0.46	26.2	C	0.46	26.2	C
		R	0.48	30.8	C	0.48	30.8	C	0.53	31.9	C	0.53	31.9	C	0.51	31.3	C	0.51	31.3	C	0.58	34.4	C	0.58	34.4	C
Southbound		LT	0.82	15.7	B	0.82	15.7	B	0.75	13.5	B	0.75	13.5	B	0.80	15.5	B	0.80	15.5	B	0.77	13.7	B	0.77	13.7	B
Intersection				19.5	B		19.5	B		17.8	B		17.8	B		20.1	C		20.1	C		16.4	B		16.4	B
96	Park Ave & 34th St																									
Eastbound		T	0.81	37.6	D	0.77	32.9	C	0.86	41.6	D	0.81	35.7	D	0.72	31.9	C	0.68	28.6	C	0.63	28.0	C	0.60	25.5	C
		R	0.28	22.3	C	0.26	20.4	C	0.34	23.7	C	0.31	21.5	C	0.26	21.8	C	0.24	19.9	B	0.10	18.5	B	0.10	17.2	B
Westbound		T	1.19	252.8	F	1.13	217.8	F	1.11	232.8	F	1.05	202.6	F	1.08	212.6	F	1.02	143.0	F	1.10	209.4	F	1.04	181.3	F
		R	0.26	21.1	C	0.24	19.5	B	0.21	20.3	C	0.20	18.8	B	0.40	24.1	C	0.38	22.1	C	0.29	22.1	C	0.26	20.2	C
Northbound		TR	0.55	17.1	B	0.58	18.7	B	0.59	17.7	B	0.62	19.5	B	0.64	18.8	B	0.67	20.7	C	0.48	16.0	B	0.50	17.5	B
Southbound		TR	0.69	20.0	B	0.73	22.2	C	0.71	20.7	C	0.75	23.0	C	0.75	21.7	C	0.78	24.3	C	0.57	17.4	B	0.60	19.1	B
Intersection				73.3	E		66.0	E		63.7	E		58.2	E		58.4	E		46.1	mid-D		66.1	E		59.6	E
97	Lexington Ave & 34th St																									
Eastbound		T	0.70	30.0	C	0.67	27.0	C	0.82	37.0	D	0.82	37.0	D	0.69	29.4	C	0.67	27.9	C	0.69	28.7	C	0.65	26.0	C
		R	0.46	26.4	C	0.43	23.6	C	0.40	24.5	C	0.40	24.5	C	0.30	21.9	C	0.28	20.9	C	0.27	21.2	C	0.25	19.4	B
Westbound		T	1.19	238.5	F	1.13	206.5	F	0.56	23.8	C	0.56	23.8	C	1.06	199.2	F	1.03	180.4	F	1.10	199.7	F	1.04	172.6	F
Southbound		LT	1.04	124.0	F	0.99	37.2	D	0.76	17.2	B	0.68	15.2	B	0.71	16.1	B	0.66	15.5	B	0.56	13.2	B	0.53	14.2	B
		R	0.38	20.6	C	0.39	22.5	C	0.32	12.7	B	0.30	12.2	B	0.96	77.1	E	0.94	74.6	E	0.50	26.2	C	0.52	28.9	C
Intersection				131.7	F		74.8	E		22.8	C		21.8	C		67.4	E		62.1	E		70.4	E		62.5	E
98	Third Ave & 34th St																									
Eastbound		L	0.43	22.5	C	0.42	21.5	C	0.57	25.5	C	0.57	25.5	C	0.44	21.4	C	0.44	21.4	C	0.42	22.0	C	0.41	21.2	C
		T	0.73	27.7	C	0.71	26.1	C	0.73	27.7	C	0.73	27.7	C	0.60	23.3	C	0.60	23.3	C	0.64	24.0	C	0.63	22.8	C
Westbound		TR	0.93	50.5	mid-D	0.89	44.9	D	0.79	38.5	D	0.79	38.5	D	0.77	37.1	D	0.77	37.1	D	0.97	57.7	E	0.93	50.1	mid-D
Northbound		LTR	0.74	19.4	B	0.75	20.6	C	0.78	20.5	C	0.78	20.5	C	0.89	24.9	C	0.89	24.9	C	0.76	19.8	B	0.78	21.1	C
Intersection				27.6	C		26.9	C		25.1	C		25.1	C		26.5	C		26.5	C		28.6	C		27.6	C
99	Ramp from I-495 & 34th St																									
Eastbound		T	0.31	4.5	A	0.31	4.5	A	0.31	4.6	A	0.31	4.6	A	0.27	4.3	A	0.27	4.3	A	0.33	4.7	A	0.33	4.7	A
Westbound		T	0.43	24.1	C	0.43	24.1	C	0.35	23.0	C	0.35	23.0	C	0.39	24.2	C	0.39	24.2	C	0.46	24.6	C	0.46	24.6	C
Southbound		L	0.85	81.6	F	0.85	81.6	F	0.67	59.2	E	0.67	59.2	E	0.58	52.2	mid-D	0.58	52.2	mid-D	1.09	371.2	F	1.09	371.2	F
		R	0.28	11.8	B	0.28	11.8	B	0.24	11.3	B	0.24	11.3	B	0.19	10.4	B	0.19	10.4	B	0.32	12.3	B	0.32	12.3	B
Intersection				18.0	B		18.0	B		14.5	B		14.5	B		14.7	B		14.7	B		52.2	mid-D		52.2	mid-D
100	Second Ave & 34th St																									
Eastbound		T	0.75	36.2	D	0.75	36.2	D	0.81	39.2	D	0.81	39.2	D	0.70	34.3	C	0.70	34.3	C	0.80	38.3	D	0.80	38.3	D
		R	1.06	346.3	F	1.06	346.3	F	0.81	65.8	E	0.81	65.8	E	0.69	52.2	mid-D	0.69	52.2	mid-D	0.79	58.2	E	0.79	58.2	E
Westbound		DefL	0.68	41.1	D	0.68	41.1	D	0.45	32.0	C	0.45	32.0	C	0.44	29.3	C	0.44	29.3	C	0.37	30.2	C	0.37	30.2	C
		T	0.47	21.2	C	0.47	21.2	C	0.39	19.9	B	0.39	19.9	B	0.36	19.3	B	0.36	19.3	B	0.43	20.5	C	0.43	20.5	C
Southbound		L	0.71	22.2	C	0.71	22.2	C	0.41	14.8	B	0.41	14.8	B	0.48	16.0	B	0.48	16.0	B	0.37	15.6	B	0.37	15.6	B
		LTR	0.93	24.9	C	0.93	24.9	C	0.75	17.8	B	0.75	17.8	B	0.86	21.0	C	0.86	21.0	C	0.78	18.4	B	0.78	18.4	B
Intersection				37.9	D		37.9	D		23.6	C		23.6	C		23.5	C		23.5	C		23.9	C		23.9	C
101	Ramp to I-495 & 34th St																									
Eastbound		L	0.39	14.5	B	0.39	14.0	B	0.47	15.5	B	0.47	15.5	B	0.31	12.8	B	0.31	12.8	B	0.54	16.6	B	0.54	16.6	B
		LTR	0.69	17.9	B	0.67	16.9	B	0.49	14.0	B	0.49	14.0	B	0.52	14.4	B	0.52	14.4	B	0.42	13.0	B	0.42	13.0	B
Westbound		LT	0.98	71.1	E	0.92	58.9	E	0.75	44.1	D	0.75	44.1	D	0.66	40.2	D	0.66	40.2	D	0.77	45.0	D	0.77	45.0	D
		R	1.01	143.1	F	0.94	94.6	F	1.04	281.7	F	1.04	281.7	F	1.10	511.9	F	1.10	511.9	F	0.76	64.3	E	0.76	64.3	E
Northbound		LTR	0.11	37.5	D	0.12	38.8	D	0.11	37.5	D	0.11	37.5	D	0.18	39.5	D	0.18	39.5	D	0.11	37.5	D	0.11	37.5	D
Intersection				42.7	D		34.8	C		48.9	mid-D		48.9	mid-D		77.0	E		77.0	E		27.3	C		27.3	C

Analysis Location		Lane Group	Weekday AM (Single-Tenant)						Weekday MD (Multi-Tenant)						Weekday PM (Multi-Tenant)						Saturday MD (Multi-Tenant)					
			2014 Build			2014 Build with Mitigation			2014 Build			2014 Build with Mitigation			2014 Build			2014 Build with Mitigation			2014 Build			2014 Build with Mitigation		
			V/C Ratio	Delay (spv)	LOS	V/C Ratio	Delay (spv)	LOS	V/C Ratio	Delay (spv)	LOS	V/C Ratio	Delay (spv)	LOS	V/C Ratio	Delay (spv)	LOS	V/C Ratio	Delay (spv)	LOS	V/C Ratio	Delay (spv)	LOS	V/C Ratio	Delay (spv)	LOS
102	First Ave & 34th St																									
Eastbound		LT	1.11	268.1	F	1.11	268.1	F	0.87	37.9	D	0.87	37.9	D	0.93	45.3	mid-D	0.87	36.0	D	0.74	29.5	C	0.74	29.5	C
Westbound		TR	0.73	36.0	D	0.73	36.0	D	0.54	31.2	C	0.54	31.2	C	0.60	32.4	C	0.57	31.1	C	0.49	30.3	C	0.49	30.3	C
Northbound		LTR	0.75	20.4	C	0.75	20.4	C	0.71	19.6	B	0.71	19.6	B	0.76	20.7	C	0.80	23.5	C	0.57	17.4	B	0.57	17.4	B
Intersection				88.6	F		88.6	F		25.8	C		25.8	C		28.3	C		27.6	C		22.5	C		22.5	C
103	FDR Drive & 34th St																									
Eastbound		L	1.08	349.2	F	1.08	349.2	F	1.05	292.6	F	0.94	77.0	E	1.12	387.4	F	1.01	124.3	F	0.94	79.2	E	0.89	67.3	E
		LTR	0.94	74.6	E	0.94	74.6	E	0.77	51.2	mid-D	0.70	42.8	D	0.82	56.3	E	0.75	46.1	mid-D	0.48	36.1	D	0.45	34.1	C
		R	0.87	39.1	D	0.82	33.4	C	0.68	26.7	C	0.65	24.0	C	0.70	27.2	C	0.59	18.8	B	0.55	22.1	C	0.55	22.1	C
Westbound		LTR	0.09	26.8	C	0.09	26.8	C	0.04	26.2	C	0.04	24.6	C	0.14	27.5	C	0.13	25.8	C	0.03	26.1	C	0.03	25.3	C
Northbound		L	1.19	230.9	F	1.13	202.6	F	0.69	16.9	B	0.72	19.3	B	0.99	60.1	E	0.91	48.7	mid-D	0.67	16.8	B	0.70	18.6	B
		TR	0.29	7.7	A	0.29	7.7	A	0.11	6.4	A	0.12	7.2	A	0.18	6.9	A	0.19	7.7	A	0.08	6.2	A	0.08	6.6	A
Southbound		LTR	0.87	31.0	C	0.91	36.8	D	0.53	20.0	B	0.56	21.8	C	0.75	25.1	C	0.90	40.2	D	0.62	21.7	C	0.62	21.7	C
Intersection				91.9	F		89.0	F		56.7	E		30.0	C		69.8	E		44.4	D		28.3	C		27.0	C

APPENDIX C.4
Transit Analyses

2008 Existing - Subway LOS Analysis

Location					Effective Width (ft) / Quantity	AM					PM				
						Volume Up / Out	Volume Down / In	Capacity	V/C Ratio	LOS	Volume Up / Out	Volume Down / In	Capacity	V/C Ratio	LOS
A/C/E 8th Avenue & 34th Street	Stairs	N68	S15	8th & 35th, NE, E	3.9	130	3	468	0.29	A	16	112	468	0.27	A
			S14	8th & 35th, NE, W	3.1	301	17	372	0.85	C	26	289	372	0.85	C
			P12	8th & 35th, NE, E+W	8.0	432	20	960	0.47	B	42	400	960	0.46	B
			S11	8th & 35th, SE	3.2	156	17	384	0.45	B	38	117	384	0.40	A
			P10	8th & 35th, SE	7.8	156	17	936	0.18	A	38	117	936	0.16	A
		N69	S12	8th & 35th, NW, W	3.1	95	16	372	0.30	A	32	54	419	0.21	A
			S13	8th & 35th, NW, E	3.1	310	30	372	0.91	C	65	220	372	0.76	C
			P11	8th & 35th, NW, E+W	8.0	392	52	960	0.46	B	79	248	960	0.34	A
			S10	8th & 35th, SW	3.3	136	8	396	0.36	A	39	88	396	0.32	A
			P9	8th & 35th, SW	5.0	136	8	600	0.24	A	39	88	600	0.21	A
		N70	S9	8th & 34th, NE	4.5	150	39	540	0.35	A	57	245	540	0.56	B
			P8	8th & 34th, NE	10.0	150	39	1200	0.16	A	57	245	1200	0.25	A
			S7	8th & 34th, SE	6.0	150	90	810	0.30	A	69	204	720	0.38	A
			P6	8th & 34th, SE	5.7	150	90	770	0.31	A	69	204	684	0.40	A
		N71	S8	8th & 34th, NW	4.8	229	29	576	0.45	A	50	143	576	0.34	A
			P7	8th & 34th, NW	7.3	229	29	876	0.29	A	50	143	876	0.22	A
			S6	8th & 34th, SW	4.7	354	49	564	0.71	C	84	300	564	0.68	B
			P5	8th & 34th, SW	10.1	354	49	1212	0.33	A	84	300	1212	0.32	A
		N72	S5	8th & 33rd, NE	3.0	96	11	360	0.30	A	56	117	360	0.48	B
			P4	8th & 33rd, NE	3.4	96	11	408	0.26	A	56	117	408	0.42	A
			S1	8th & 33rd, SE	6.4	187	74	768	0.34	A	116	188	864	0.35	A
			P1	8th & 33rd, SE	6.4	187	74	768	0.34	A	116	188	864	0.35	A
		N73	S4	8th & 33rd, NW	3.4	352	25	408	0.92	C	55	228	408	0.69	B
			P3	8th & 33rd, NW	3.4	352	25	408	0.92	C	55	228	408	0.69	B
			S2	8th & 33rd, SW, W	3.3	316	54	396	0.93	C	193	235	446	0.96	C
			S3	8th & 33rd, SW, E	3.3	203	23	396	0.57	B	99	110	446	0.47	B
			P2	8th & 33rd, SW, E+W	6.1	519	77	732	0.81	C	292	345	824	0.77	C
	Control Elements	N68	TS1	Two-Way Tunrstile Array	3	206	31	1152	0.21	B	4	366	1152	0.32	B
			HT1	Two-Way HEET	2	372	2	480	0.78	D	94	72	540	0.31	B
			SG1	Two-Way Service Gate	1	5	0	600	0.01	A	4	1	600	0.01	A
		N69	TS1	Two-Way Tunrstile Array	3	721	26	1152	0.65	D	29	250	1152	0.24	B
			HT1	Two-Way HEET	2	43	35	540	0.14	A	63	36	540	0.18	A
			SG1	Two-Way Service Gate	1	2	1	675	0.00	A	0	4	600	0.01	A
		N70	TS1	Two-Way Tunrstile Array	5	327	104	1920	0.22	B	154	338	1920	0.26	B
			SG1	Two-Way Service Gate	1	4	3	675	0.01	A	4	5	675	0.01	A
		N71	TS1	Two-Way Tunrstile Array	5	503	65	1920	0.30	B	138	311	1920	0.23	B
			HT1	Two-Way HEET	1	92	13	240	0.44	C	19	15	270	0.13	A
			SG1	Two-Way Service Gate	1	0	1	600	0.00	A	4	6	675	0.01	A
		N72	TS1	Two-Way Tunrstile Array	9	144	1816	3456	0.57	C	536	444	3888	0.25	B
			SG1	Two-Way Service Gate	3	69	4	1800	0.04	A	3	15	1800	0.01	A
		N73	TS1	Two-Way Tunrstile Array	9	279	591	3456	0.25	B	1356	151	3456	0.44	C
			SG1	Two-Way Service Gate	1	2	19	600	0.04	A	5	3	675	0.01	A
		N67	TS1	Two-Way Tunrstile Array	13	436	1336	4992	0.35	B	882	863	5616	0.31	B
			HT1	Two-Way HEET	2	52	0	480	0.11	A	67	16	480	0.17	A
			SG1	Two-Way Service Gate	1	17	24	675	0.06	A	24	15	675	0.06	A

Location					Effective Width (ft) / Quantity	AM					PM				
						Volume Up / Out	Volume Down / In	Capacity	V/C Ratio	LOS	Volume Up / Out	Volume Down / In	Capacity	V/C Ratio	LOS
1/2/3 7th Avenue & 34th Street	Stairs	R141	S6	7th & 34th, NE	4.1	233	45	492	0.57	B	123	353	492	0.97	C
			P8	7th & 34th, NE	10.8	233	45	1296	0.21	A	123	353	1296	0.37	A
			S4	7th & 34th, SE	8.5	88	32	1020	0.12	A	72	166	1020	0.23	A
			P6	7th & 34th, SE	11.5	88	32	1380	0.09	A	72	166	1380	0.17	A
		R142	S5	7th & 34th, NW	4.6	499	51	552	1.00	C	96	321	552	0.76	C
			P7	7th & 34th, NW	10.7	499	51	1284	0.43	A	96	321	1284	0.32	A
			S3	7th & 34th, SW	4.6	183	30	552	0.39	A	76	72	621	0.24	A
			P5	7th & 34th, SW	10.6	183	30	1272	0.17	A	76	72	1431	0.10	A
		R139	O19	7th & 33rd, NE, E	4.8	146	9	576	0.27	A	11	152	576	0.28	A
			O18	7th & 33rd, NE, E	4.8	146	9	576	0.27	A	11	152	576	0.28	A
			S2	7th & 33rd, NE, W	4.3	228	44	516	0.53	B	148	178	581	0.56	B
			P4	7th & 33rd, NE, W	5.8	228	44	696	0.39	A	148	178	783	0.42	A
			O17	7th & 33rd, SE	8.5	267	17	1020	0.28	A	75	432	1020	0.50	B
			P3	7th & 33rd, SE	9.2	267	17	1104	0.26	A	75	432	1104	0.46	B
		R139X	S1	7th & 33rd, NW	3.4	120	20	408	0.34	A	89	60	459	0.32	A
			P1	7th & 33rd, NW	7.3	120	20	876	0.16	A	89	60	986	0.15	A
			P2	7th & 33rd, NW	3.8	120	20	456	0.31	A	89	60	513	0.29	A
		R137K	O15	7th & 32nd, NE	8.8	246	34	1056	0.27	A	37	256	1056	0.28	A
			O14	7th & 32nd, NE	8.8	246	34	1056	0.27	A	37	256	1056	0.28	A
	Control Elements	R141	TS1	Two-Way Tunrstile Array	7	304	71	2688	0.14	A	186	477	2688	0.25	B
			SG1	Two-Way Service Gate	1	0	4	600	0.01	A	13	11	675	0.04	A
		R142	TS1	Two-Way Tunrstile Array	4	453	64	1536	0.34	B	137	303	1536	0.29	B
			HT1	Two-Way HEET	2	158	6	480	0.34	B	42	22	540	0.12	A
			SG1	Two-Way Service Gate	1	66	0	600	0.11	A	9	3	600	0.02	A
		R139	TS1	Two-Way Tunrstile Array	4	34	354	1536	0.25	B	159	161	1728	0.19	A
			HT1	Two-Way HEET	1	19	11	270	0.11	A	50	4	240	0.23	B
			SG1	Two-Way Service Gate	1	2	2	675	0.01	A	4	5	675	0.01	A
		R139X	HT1	Two-Way HEET	1	97	20	240	0.49	C	55	60	270	0.43	C
			SG1	Two-Way Service Gate	1	23	0	600	0.04	A	34	0	600	0.06	A
		R137K	TS1	Two-Way Tunrstile Array	3	240	27	1152	0.23	B	47	218	1152	0.23	B
			SG1	Two-Way Service Gate	1	1	0	600	0.00	A	1	2	675	0.00	A
		R138	TS1	Two-Way Tunrstile Array	12	198	2184	4608	0.52	C	2187	685	4608	0.62	D
			SG1	Two-Way Service Gate	1	402	3	600	0.68	D	615	7	600	1.04	F
		R135	TS1	Two-Way Tunrstile Array	6	35	1400	2304	0.62	D	1562	151	2304	0.74	D
			SG1	Two-Way Service Gate	1	246	9	600	0.43	C	55	1	600	0.09	A

Location					Effective Width (ft) / Quantity	AM					PM				
						Volume Up / Out	Volume Down / In	Capacity	V/C Ratio	LOS	Volume Up / Out	Volume Down / In	Capacity	V/C Ratio	LOS
B/D/F/V N/Q/R/W PATH 6th Avenue Broadway & 34th Street	Stairs	N505	S8	6th & 35th, NE	3.8	572	50	456	1.36	E	72	453	456	1.15	D
			M8	6th & 35th, NE	8.8	572	50	1056	0.59	B	72	453	1056	0.50	B
			S5	6th & 35th, SE	3.8	256	6	456	0.58	B	34	126	456	0.35	A
			M9	6th & 35th, SE	3.8	256	6	456	0.58	B	34	126	456	0.35	A
			M10	6th & 35th, SE	8.7	256	6	1044	0.25	A	34	126	1044	0.15	A
			S7	6th & 35th, NW	4.8	468	16	576	0.84	C	38	224	576	0.45	B
			M7	6th & 35th, NW	8.5	468	16	1020	0.47	B	38	224	1020	0.26	A
			S6	B'way & 35th, NW	3.9	587	7	468	1.27	D	38	461	468	1.06	D
			M6	B'way & 35th, NW	6.6	587	7	792	0.75	C	38	461	792	0.63	B
			S4	B'way & 35th, SW	3.9	22	5	468	0.06	A	18	107	468	0.27	A
			M5	B'way & 35th, SW	6.8	22	5	816	0.03	A	18	107	816	0.15	A
		A22	S3	6th & 34th, NE	4.2	215	29	504	0.48	B	92	351	504	0.88	C
			M8	6th & 34th, NE	13.0	215	29	1560	0.16	A	92	351	1560	0.28	A
			S4	6th & 34th, SE	4.4	631	70	528	1.33	D	212	462	528	1.28	D
			M4	6th & 34th, SE	4.4	631	70	528	1.33	D	212	462	528	1.28	D
		N506	S7	B'way & 34th, NW	7.4	737	132	888	0.98	C	330	710	888	1.17	D
			M7	B'way & 34th, NW	7.4	737	132	888	0.98	C	330	710	888	1.17	D
			S5	B'way & 34th, SW	8.2	780	414	1107	1.08	D	604	729	1107	1.20	D
			M5	B'way & 34th, SW	8.2	780	414	1107	1.08	D	604	729	1107	1.20	D
		N507	307	6th & 32nd, NW	4.7	450	87	564	0.95	C	287	235	635	0.82	C
		A25K	300	6th & 32nd, NE	4.0	265	171	540	0.81	C	198	363	540	1.04	D
			S1	B'way & 32nd, NE	5.2	656	84	624	1.19	D	89	587	624	1.08	D
			M2	B'way & 32nd, NE	4.8	656	84	576	1.28	D	89	587	576	1.17	D
			S2	B'way & 32nd, NW	6.5	871	108	780	1.26	D	250	693	780	1.21	D
			M1	B'way & 32nd, NW	6.5	871	108	780	1.26	D	250	693	780	1.21	D
	Escal-ators	N507	E221	6th btwn 32nd & 33rd, W	2.0	0	45	525	0.09	A	0	206	525	0.39	B
			E222	6th btwn 32nd & 33rd, W	4.0	468	0	1050	0.45	C	297	0	1050	0.28	B
	Control Elements	N505	TS1	Two-Way Tunrstile Array	10	993	67	3840	0.28	B	99	802	3840	0.23	B
			HT1	Two-Way HEET	2	59	22	480	0.17	A	22	393	480	0.86	E
			SG1	Two-Way Service Gate	1	516	1	600	0.86	E	22	1	600	0.04	A
		A22	TS1	Two-Way Tunrstile Array	3	407	109	1152	0.45	C	47	596	1152	0.56	C
			HT1	Two-Way HEET	2	457	164	480	1.29	F	154	102	540	0.47	C
			SG1	Two-Way Service Gate	1	5	3	675	0.01	A	11	6	675	0.03	A
		N506	TS1	Two-Way Tunrstile Array	14	913	508	6048	0.23	B	680	1007	6048	0.28	B
			SG1	Two-Way Service Gate	1	224	11	600	0.39	B	366	4	600	0.62	D
		N507	TS1	Two-Way Tunrstile Array	11	896	1361	4752	0.48	C	1661	696	4224	0.56	C
			SG1	Two-Way Service Gate	1	26	4	600	0.05	A	8	14	675	0.03	A
		A25K	TS1	Two-Way Tunrstile Array	7	625	605	3024	0.41	C	202	967	2688	0.44	C
			HT1	Two-Way HEET	3	811	32	720	1.17	F	425	248	810	0.83	E
			SG1	Two-Way Service Gate	1	206	6	600	0.35	B	7	63	600	0.12	A
		PATH	TS1	Two-Way Tunrstile Array	19	2381	527	7296	0.40	B	390	1413	7296	0.25	B
			TS2	One-Way Turnstile (Exit)	3	1860	0	1800	1.03	F	298	0	1800	0.17	A

2014 No Action - Subway LOS Analysis

Location					Effective Width (ft) / Quantity	AM					PM				
						Volume Up / Out	Volume Down / In	Capacity	V/C Ratio	LOS	Volume Up / Out	Volume Down / In	Capacity	V/C Ratio	LOS
A/C/E 8th Avenue & 34th Street	Stairs	N68	S15	8th & 35th, NE, E	3.9	134	3	468	0.29	A	16	115	468	0.28	A
			S14	8th & 35th, NE, W	3.1	312	21	372	0.89	C	32	300	372	0.89	C
			P12	8th & 35th, NE, E+W	8.0	446	24	960	0.49	B	48	415	960	0.48	B
			S11	8th & 35th, SE	3.2	161	17	384	0.46	B	39	120	384	0.41	A
			P10	8th & 35th, SE	7.8	161	17	936	0.19	A	39	120	936	0.17	A
		N69	S12	8th & 35th, NW, W	3.1	98	17	372	0.31	A	35	57	419	0.22	A
			S13	8th & 35th, NW, E	3.1	320	36	372	0.96	C	72	229	372	0.81	C
			P11	8th & 35th, NW, E+W	8.0	406	60	960	0.48	B	89	259	960	0.36	A
			S10	8th & 35th, SW	3.3	140	9	396	0.37	A	40	90	396	0.33	A
			P9	8th & 35th, SW	5.0	140	9	600	0.25	A	40	90	600	0.22	A
		N70	S9	8th & 34th, NE	4.5	155	40	540	0.36	A	59	252	540	0.58	B
			P8	8th & 34th, NE	10.0	155	40	1200	0.16	A	59	252	1200	0.26	A
			S7	8th & 34th, SE	6.0	157	128	810	0.35	A	112	213	810	0.40	A
			P6	8th & 34th, SE	5.7	157	128	770	0.37	A	112	213	770	0.42	A
		N71	S8	8th & 34th, NW	4.8	236	30	576	0.46	B	52	147	576	0.35	A
			P7	8th & 34th, NW	7.3	236	30	876	0.30	A	52	147	876	0.23	A
			S6	8th & 34th, SW	4.7	367	74	564	0.78	C	114	311	564	0.75	C
			P5	8th & 34th, SW	10.1	367	74	1212	0.36	A	114	311	1212	0.35	A
		N72	S5	8th & 33rd, NE	3.0	100	14	360	0.32	A	61	122	360	0.51	B
			P4	8th & 33rd, NE	3.4	100	14	408	0.28	A	61	122	408	0.45	A
			S1	8th & 33rd, SE	6.4	217	95	768	0.41	A	140	226	864	0.42	A
			P1	8th & 33rd, SE	6.4	217	95	768	0.41	A	140	226	864	0.42	A
		N73	S4	8th & 33rd, NW	3.4	365	33	408	0.97	C	65	239	408	0.75	C
			P3	8th & 33rd, NW	3.4	365	33	408	0.97	C	65	239	408	0.75	C
			S2	8th & 33rd, SW, W	3.3	331	68	396	1.01	D	212	251	446	1.04	D
			S3	8th & 33rd, SW, E	3.3	229	33	396	0.66	B	111	138	446	0.56	B
			P2	8th & 33rd, SW, E+W	6.1	559	101	732	0.90	C	324	389	824	0.87	C
	Control Elements	N68	TS1	Two-Way Tunrstile Array	3	213	36	1152	0.22	B	4	379	1152	0.33	B
			HT1	Two-Way HEET	2	384	2	480	0.81	E	101	75	540	0.33	B
			SG1	Two-Way Service Gate	1	5	0	600	0.01	A	4	1	600	0.01	A
		N69	TS1	Two-Way Tunrstile Array	3	745	29	1152	0.67	D	32	261	1152	0.25	B
			HT1	Two-Way HEET	2	44	40	540	0.16	A	69	38	540	0.20	A
			SG1	Two-Way Service Gate	1	2	1	675	0.00	A	0	4	600	0.01	A
		N70	TS1	Two-Way Tunrstile Array	5	340	142	1920	0.25	B	199	352	2160	0.25	B
			SG1	Two-Way Service Gate	1	4	4	675	0.01	A	5	5	675	0.02	A
		N71	TS1	Two-Way Tunrstile Array	5	520	86	1920	0.32	B	166	323	2160	0.23	B
			HT1	Two-Way HEET	1	95	17	240	0.47	C	23	16	270	0.14	A
			SG1	Two-Way Service Gate	1	0	1	600	0.00	A	5	6	675	0.02	A
		N72	TS1	Two-Way Tunrstile Array	9	165	1893	3456	0.60	C	576	490	3888	0.27	B
			SG1	Two-Way Service Gate	3	79	4	1800	0.05	A	3	17	1800	0.01	A
		N73	TS1	Two-Way Tunrstile Array	9	314	637	3456	0.28	B	1428	193	3456	0.47	C
			SG1	Two-Way Service Gate	1	2	20	600	0.04	A	5	4	675	0.01	A
		N67	TS1	Two-Way Tunrstile Array	13	479	1622	4992	0.42	C	1170	931	5616	0.37	B
			HT1	Two-Way HEET	2	57	0	480	0.12	A	89	17	480	0.22	B
			SG1	Two-Way Service Gate	1	19	29	675	0.07	A	32	16	675	0.07	A

Location					Effective Width (ft) / Quantity	AM					PM				
						Volume Up / Out	Volume Down / In	Capacity	V/C Ratio	LOS	Volume Up / Out	Volume Down / In	Capacity	V/C Ratio	LOS
1/2/3 7th Avenue & 34th Street	Stairs	R141	S6	7th & 34th, NE	4.1	241	50	492	0.59	B	132	366	492	1.01	D
			P8	7th & 34th, NE	10.8	241	50	1296	0.23	A	132	366	1296	0.38	A
			S4	7th & 34th, SE	8.5	91	33	1020	0.12	A	74	171	1020	0.24	A
			P6	7th & 34th, SE	11.5	91	33	1380	0.09	A	74	171	1380	0.18	A
		R142	S5	7th & 34th, NW	4.6	516	59	552	1.04	D	106	334	552	0.80	C
			P7	7th & 34th, NW	10.7	516	59	1284	0.45	A	106	334	1284	0.34	A
			S3	7th & 34th, SW	4.6	189	31	552	0.40	A	78	74	621	0.25	A
			P5	7th & 34th, SW	10.6	189	31	1272	0.17	A	78	74	1431	0.11	A
		R139	O19	7th & 33rd, NE, E	4.8	150	9	576	0.28	A	11	157	576	0.29	A
			O18	7th & 33rd, NE, E	4.8	150	9	576	0.28	A	11	157	576	0.29	A
			S2	7th & 33rd, NE, W	4.3	235	47	516	0.55	B	154	184	581	0.58	B
			P4	7th & 33rd, NE, W	5.8	235	47	696	0.41	A	154	184	783	0.43	A
			O17	7th & 33rd, SE	8.5	327	16	1020	0.34	A	73	504	1020	0.57	B
			P3	7th & 33rd, SE	9.2	327	16	1104	0.31	A	73	504	1104	0.52	B
		R139X	S1	7th & 33rd, NW	3.4	124	22	408	0.36	A	94	63	459	0.34	A
			P1	7th & 33rd, NW	7.3	124	22	876	0.17	A	94	63	986	0.16	A
			P2	7th & 33rd, NW	3.8	124	22	456	0.32	A	94	63	513	0.31	A
		R137K	O15	7th & 32nd, NE	8.8	310	47	1056	0.34	A	49	332	1056	0.36	A
			O14	7th & 32nd, NE	8.8	310	47	1056	0.34	A	49	332	1056	0.36	A
	Control Elements	R141	TS1	Two-Way Tunrstile Array	7	315	77	2688	0.15	A	196	494	2688	0.26	B
			SG1	Two-Way Service Gate	1	0	4	600	0.01	A	14	11	675	0.04	A
		R142	TS1	Two-Way Tunrstile Array	4	468	71	1536	0.35	B	147	316	1536	0.30	B
			HT1	Two-Way HEET	2	163	7	480	0.35	B	45	23	540	0.13	A
			SG1	Two-Way Service Gate	1	68	0	600	0.11	A	10	3	600	0.02	A
		R139	TS1	Two-Way Tunrstile Array	4	68	364	1536	0.28	B	162	222	1728	0.22	B
			HT1	Two-Way HEET	1	38	11	240	0.20	B	51	6	240	0.23	B
			SG1	Two-Way Service Gate	1	4	2	675	0.01	A	4	7	675	0.02	A
		R139X	HT1	Two-Way HEET	1	100	22	240	0.51	C	58	63	270	0.45	C
			SG1	Two-Way Service Gate	1	24	0	600	0.04	A	36	0	600	0.06	A
		R137K	TS1	Two-Way Tunrstile Array	3	304	40	1152	0.30	B	59	292	1152	0.31	B
			SG1	Two-Way Service Gate	1	1	0	600	0.00	A	1	3	600	0.01	A
		R138	TS1	Two-Way Tunrstile Array	12	204	2253	4608	0.53	C	2256	706	4608	0.64	D
			SG1	Two-Way Service Gate	1	414	3	600	0.70	D	634	7	600	1.07	F
		R135	TS1	Two-Way Tunrstile Array	6	40	1453	2304	0.65	D	1620	191	2304	0.79	D
			SG1	Two-Way Service Gate	1	279	9	600	0.48	C	57	1	600	0.10	A

Location					Effective Width (ft) / Quantity	AM					PM				
						Volume Up / Out	Volume Down / In	Capacity	V/C Ratio	LOS	Volume Up / Out	Volume Down / In	Capacity	V/C Ratio	LOS
B/D/F/V N/Q/R/W PATH 6th Avenue Broadway & 34th Street	Stairs	N505	S8	6th & 35th, NE	3.8	590	52	456	1.41	E	75	468	456	1.19	D
			M8	6th & 35th, NE	8.8	590	52	1056	0.61	B	75	468	1056	0.51	B
			S5	6th & 35th, SE	3.8	264	7	456	0.59	B	36	130	456	0.36	A
			M9	6th & 35th, SE	3.8	264	7	456	0.59	B	36	130	456	0.36	A
			M10	6th & 35th, SE	8.7	264	7	1044	0.26	A	36	130	1044	0.16	A
			S7	6th & 35th, NW	4.8	482	16	576	0.87	C	39	231	576	0.47	B
			M7	6th & 35th, NW	8.5	482	16	1020	0.49	B	39	231	1020	0.27	A
			S6	B'way & 35th, NW	3.9	605	9	468	1.31	D	41	476	468	1.10	D
			M6	B'way & 35th, NW	6.6	605	9	792	0.78	C	41	476	792	0.65	B
			S4	B'way & 35th, SW	3.9	23	7	468	0.06	A	21	112	468	0.28	A
			M5	B'way & 35th, SW	6.8	23	7	816	0.04	A	21	112	816	0.16	A
		A22	S3	6th & 34th, NE	4.2	221	30	504	0.50	B	95	362	504	0.91	C
			M8	6th & 34th, NE	13.0	221	30	1560	0.16	A	95	362	1560	0.29	A
			S4	6th & 34th, SE	4.4	650	72	528	1.37	E	218	476	528	1.31	D
			M4	6th & 34th, SE	4.4	650	72	528	1.37	E	218	476	528	1.31	D
		N506	S7	B'way & 34th, NW	7.4	760	138	888	1.01	D	342	733	888	1.21	D
			M7	B'way & 34th, NW	7.4	760	138	888	1.01	D	342	733	888	1.21	D
			S5	B'way & 34th, SW	8.2	823	427	1107	1.13	D	623	774	1107	1.26	D
			M5	B'way & 34th, SW	8.2	823	427	1107	1.13	D	623	774	1107	1.26	D
		N507	307	6th & 32nd, NW	4.7	538	106	564	1.14	D	311	330	635	1.01	D
		A25K	300	6th & 32nd, NE	4.0	301	187	540	0.90	C	215	409	540	1.16	D
			S1	B'way & 32nd, NE	5.2	676	87	624	1.22	D	91	605	624	1.12	D
			M2	B'way & 32nd, NE	4.8	676	87	576	1.32	D	91	605	576	1.21	D
			S2	B'way & 32nd, NW	6.5	910	115	780	1.31	D	260	729	780	1.27	D
			M1	B'way & 32nd, NW	6.5	910	115	780	1.31	D	260	729	780	1.27	D
	Escal-ators	N507	E221	6th btwn 32nd & 33rd, W	2.0	0	52	525	0.10	A	0	262	525	0.50	C
			E222	6th btwn 32nd & 33rd, W	4.0	525	0	1050	0.50	C	309	0	1050	0.29	B
	Control Elements	N505	TS1	Two-Way Tunrstile Array	10	1025	72	3840	0.29	B	107	828	3840	0.24	B
			HT1	Two-Way HEET	2	61	24	480	0.18	A	24	406	480	0.89	E
			SG1	Two-Way Service Gate	1	532	1	600	0.89	E	24	1	600	0.04	A
		A22	TS1	Two-Way Tunrstile Array	3	419	113	1152	0.46	C	48	614	1152	0.58	C
			HT1	Two-Way HEET	2	470	169	480	1.33	F	159	105	540	0.49	C
			SG1	Two-Way Service Gate	1	5	3	675	0.01	A	12	6	675	0.03	A
		N506	TS1	Two-Way Tunrstile Array	14	957	525	6048	0.24	B	702	1060	6048	0.29	B
			SG1	Two-Way Service Gate	1	235	12	600	0.41	C	378	4	600	0.64	D
		N507	TS1	Two-Way Tunrstile Array	11	995	1424	4752	0.51	C	1732	805	4224	0.60	D
			SG1	Two-Way Service Gate	1	29	4	600	0.06	A	9	16	675	0.04	A
		A25K	TS1	Two-Way Tunrstile Array	7	699	647	3024	0.44	C	227	1060	2688	0.48	C
			HT1	Two-Way HEET	3	842	35	720	1.22	F	445	272	810	0.89	E
			SG1	Two-Way Service Gate	1	221	7	600	0.38	B	8	69	600	0.13	A
		PATH	TS1	Two-Way Tunrstile Array	19	2469	546	7296	0.41	C	403	1489	7296	0.26	B
			TS2	One-Way Turnstile (Exit)	3	1929	0	1800	1.07	F	308	0	1800	0.17	A

2014 Future with the Proposed Project - Single-Tenant Scenario - Subway LOS Analysis

Location					Effective Width (ft) / Quantity	AM					PM				
						Volume Up / Out	Volume Down / In	Capacity	V/C Ratio	LOS	Volume Up / Out	Volume Down / In	Capacity	V/C Ratio	LOS
A/C/E 8th Avenue & 34th Street	Stairs	N68	S15	8th & 35th, NE, E	3.9	134	3	468	0.29	A	16	115	468	0.28	A
			S14	8th & 35th, NE, W	3.1	312	21	372	0.89	C	32	300	372	0.89	C
			P12	8th & 35th, NE, E+W	8.0	446	24	960	0.49	B	48	415	960	0.48	B
			S11	8th & 35th, SE	3.2	161	17	384	0.46	B	39	120	384	0.41	A
			P10	8th & 35th, SE	7.8	161	17	936	0.19	A	39	120	936	0.17	A
		N69	S12	8th & 35th, NW, W	3.1	98	17	372	0.31	A	35	57	419	0.22	A
			S13	8th & 35th, NW, E	3.1	320	36	372	0.96	C	72	229	372	0.81	C
			P11	8th & 35th, NW, E+W	8.0	406	60	960	0.48	B	89	259	960	0.36	A
			S10	8th & 35th, SW	3.3	140	9	396	0.37	A	40	90	396	0.33	A
			P9	8th & 35th, SW	5.0	140	9	600	0.25	A	40	90	600	0.22	A
		N70	S9	8th & 34th, NE	4.5	155	40	540	0.36	A	59	252	540	0.58	B
			P8	8th & 34th, NE	10.0	155	40	1200	0.16	A	59	252	1200	0.26	A
			S7	8th & 34th, SE	6.0	157	128	810	0.35	A	112	213	810	0.40	A
			P6	8th & 34th, SE	5.7	157	128	770	0.37	A	112	213	770	0.42	A
		N71	S8	8th & 34th, NW	4.8	236	30	576	0.46	B	52	147	576	0.35	A
			P7	8th & 34th, NW	7.3	236	30	876	0.30	A	52	147	876	0.23	A
			S6	8th & 34th, SW	4.7	367	74	564	0.78	C	114	311	564	0.75	C
			P5	8th & 34th, SW	10.1	367	74	1212	0.36	A	114	311	1212	0.35	A
		N72	S5	8th & 33rd, NE	3.0	100	14	360	0.32	A	61	122	360	0.51	B
			P4	8th & 33rd, NE	3.4	100	14	408	0.28	A	61	122	408	0.45	A
			S1	8th & 33rd, SE	6.4	241	95	768	0.44	A	140	248	864	0.45	A
			P1	8th & 33rd, SE	6.4	241	95	768	0.44	A	140	248	864	0.45	A
		N73	S4	8th & 33rd, NW	3.4	365	33	408	0.97	C	65	239	408	0.75	C
			P3	8th & 33rd, NW	3.4	365	33	408	0.97	C	65	239	408	0.75	C
			S2	8th & 33rd, SW, W	3.3	334	68	396	1.02	D	212	254	446	1.05	D
			S3	8th & 33rd, SW, E	3.3	250	33	396	0.71	C	111	158	446	0.60	B
			P2	8th & 33rd, SW, E+W	6.1	583	101	732	0.94	C	324	412	824	0.89	C
	Control Elements	N68	TS1	Two-Way Tunrstile Array	3	213	36	1152	0.22	B	4	379	1152	0.33	B
			HT1	Two-Way HEET	2	384	2	480	0.81	E	101	75	540	0.33	B
			SG1	Two-Way Service Gate	1	5	0	600	0.01	A	4	1	600	0.01	A
		N69	TS1	Two-Way Tunrstile Array	3	745	29	1152	0.67	D	32	261	1152	0.25	B
			HT1	Two-Way HEET	2	44	40	540	0.16	A	69	38	540	0.20	A
			SG1	Two-Way Service Gate	1	2	1	675	0.00	A	0	4	600	0.01	A
		N70	TS1	Two-Way Tunrstile Array	5	340	142	1920	0.25	B	199	352	2160	0.25	B
			SG1	Two-Way Service Gate	1	4	4	675	0.01	A	5	5	675	0.02	A
		N71	TS1	Two-Way Tunrstile Array	5	520	86	1920	0.32	B	166	323	2160	0.23	B
			HT1	Two-Way HEET	1	95	17	240	0.47	C	23	16	270	0.14	A
			SG1	Two-Way Service Gate	1	0	1	600	0.00	A	5	6	675	0.02	A
		N72	TS1	Two-Way Tunrstile Array	9	181	1893	3456	0.60	D	576	512	3888	0.28	B
			SG1	Two-Way Service Gate	3	87	4	1800	0.05	A	3	17	1800	0.01	A
		N73	TS1	Two-Way Tunrstile Array	9	338	637	3888	0.25	B	1428	215	3456	0.48	C
			SG1	Two-Way Service Gate	1	2	20	600	0.04	A	5	4	675	0.01	A
		N67	TS1	Two-Way Tunrstile Array	13	489	1622	4992	0.42	C	1170	942	5616	0.38	B
			HT1	Two-Way HEET	2	58	0	480	0.12	A	89	17	480	0.22	B
			SG1	Two-Way Service Gate	1	19	29	675	0.07	A	32	16	675	0.07	A

Location					Effective Width (ft) / Quantity	AM					PM				
						Volume Up / Out	Volume Down / In	Capacity	V/C Ratio	LOS	Volume Up / Out	Volume Down / In	Capacity	V/C Ratio	LOS
1/2/3 7th Avenue & 34th Street	Stairs	R141	S6	7th & 34th, NE	4.1	241	50	492	0.59	B	132	366	492	1.01	D
			P8	7th & 34th, NE	10.8	241	50	1296	0.23	A	132	366	1296	0.38	A
			S4	7th & 34th, SE	8.5	91	33	1020	0.12	A	74	171	1020	0.24	A
			P6	7th & 34th, SE	11.5	91	33	1380	0.09	A	74	171	1380	0.18	A
		R142	S5	7th & 34th, NW	4.6	516	59	552	1.04	D	106	334	552	0.80	C
			P7	7th & 34th, NW	10.7	516	59	1284	0.45	A	106	334	1284	0.34	A
			S3	7th & 34th, SW	4.6	189	31	552	0.40	A	78	74	621	0.25	A
			P5	7th & 34th, SW	10.6	189	31	1272	0.17	A	78	74	1431	0.11	A
		R139	O19	7th & 33rd, NE, E	4.8	181	42	576	0.39	A	99	175	648	0.42	A
			O18	7th & 33rd, NE, E	4.8	181	42	576	0.39	A	99	175	648	0.42	A
			S2	7th & 33rd, NE, W	4.3	284	92	516	0.73	C	285	213	581	0.86	C
			P4	7th & 33rd, NE, W	5.8	284	92	696	0.54	B	285	213	783	0.64	B
			O17	7th & 33rd, SE	8.5	521	92	1020	0.60	B	284	658	1020	0.92	C
			P3	7th & 33rd, SE	9.2	521	92	1104	0.56	B	284	667	1104	0.86	C
		R139X	S1	7th & 33rd, NW	3.4	106	17	408	0.30	A	78	49	459	0.28	A
			P1	7th & 33rd, NW	7.3	106	17	876	0.14	A	78	49	986	0.13	A
			P2	7th & 33rd, NW	3.8	106	17	456	0.27	A	78	49	513	0.25	A
		R137K	O15	7th & 32nd, NE	8.8	338	40	1056	0.36	A	27	370	1056	0.38	A
			O14	7th & 32nd, NE	8.8	338	40	1056	0.36	A	27	370	1056	0.38	A
	Control Elements	R141	TS1	Two-Way Tunrstile Array	7	315	77	2688	0.15	A	196	494	2688	0.26	B
			SG1	Two-Way Service Gate	1	0	4	600	0.01	A	14	11	675	0.04	A
		R142	TS1	Two-Way Tunrstile Array	4	468	71	1536	0.35	B	147	316	1536	0.30	B
			HT1	Two-Way HEET	2	163	7	480	0.35	B	45	23	540	0.13	A
			SG1	Two-Way Service Gate	1	68	0	600	0.11	A	10	3	600	0.02	A
		R139	TS1	Two-Way Tunrstile Array	4	141	377	1536	0.34	B	190	315	1728	0.29	B
			HT1	Two-Way HEET	1	79	12	240	0.38	B	60	8	240	0.28	B
			SG1	Two-Way Service Gate	1	8	2	600	0.02	A	5	10	600	0.02	A
		R139X	HT1	Two-Way HEET	1	85	17	240	0.43	C	48	49	270	0.36	B
			SG1	Two-Way Service Gate	1	20	0	600	0.03	A	30	0	600	0.05	A
		R137K	TS1	Two-Way Tunrstile Array	3	331	32	1152	0.32	B	37	330	1152	0.32	B
			SG1	Two-Way Service Gate	1	1	0	600	0.00	A	1	3	600	0.01	A
		R138	TS1	Two-Way Tunrstile Array	12	204	2253	4608	0.53	C	2256	706	4608	0.64	D
			SG1	Two-Way Service Gate	1	414	3	600	0.70	D	634	7	600	1.07	F
		R135	TS1	Two-Way Tunrstile Array	6	44	1453	2304	0.65	D	1620	221	2304	0.80	D
			SG1	Two-Way Service Gate	1	307	9	600	0.53	C	57	1	600	0.10	A

Location					Effective Width (ft) / Quantity	AM					PM				
						Volume Up / Out	Volume Down / In	Capacity	V/C Ratio	LOS	Volume Up / Out	Volume Down / In	Capacity	V/C Ratio	LOS
B/D/F/V N/Q/R/W PATH 6th Avenue Broadway & 34th Street	Stairs	N505	S8	6th & 35th, NE	3.8	590	52	456	1.41	E	75	468	456	1.19	D
			M8	6th & 35th, NE	8.8	590	52	1056	0.61	B	75	468	1056	0.51	B
			S5	6th & 35th, SE	3.8	264	7	456	0.59	B	36	130	456	0.36	A
			M9	6th & 35th, SE	3.8	264	7	456	0.59	B	36	130	456	0.36	A
			M10	6th & 35th, SE	8.7	264	7	1044	0.26	A	36	130	1044	0.16	A
			S7	6th & 35th, NW	4.8	482	16	576	0.87	C	39	231	576	0.47	B
			M7	6th & 35th, NW	8.5	482	16	1020	0.49	B	39	231	1020	0.27	A
			S6	B'way & 35th, NW	3.9	605	9	468	1.31	D	41	476	468	1.10	D
			M6	B'way & 35th, NW	6.6	605	9	792	0.78	C	41	476	792	0.65	B
			S4	B'way & 35th, SW	3.9	23	7	468	0.06	A	21	112	468	0.28	A
			M5	B'way & 35th, SW	6.8	23	7	816	0.04	A	21	112	816	0.16	A
		A22	S3	6th & 34th, NE	4.2	221	30	504	0.50	B	95	362	504	0.91	C
			M8	6th & 34th, NE	13.0	221	30	1560	0.16	A	95	362	1560	0.29	A
			S4	6th & 34th, SE	4.4	650	72	528	1.37	E	218	476	528	1.31	D
			M4	6th & 34th, SE	4.4	650	72	528	1.37	E	218	476	528	1.31	D
		N506	S7	B'way & 34th, NW	7.4	783	138	888	1.04	D	345	745	888	1.23	D
			M7	B'way & 34th, NW	7.4	783	138	888	1.04	D	345	745	888	1.23	D
			S5	B'way & 34th, SW	8.2	878	421	984	1.32	D	600	816	1107	1.28	D
			M5	B'way & 34th, SW	8.2	878	421	984	1.32	D	600	816	1107	1.28	D
		N507	307	6th & 32nd, NW	8.0	130	10	960	0.15	A	147	78	1080	0.21	A
			NEW1	6th & 33rd, SW	8.0	142	124	1080	0.25	A	331	93	960	0.44	A
		A25K	300	6th & 32nd, NE	4.0	282	64	480	0.72	C	91	379	480	0.98	C
			S1	B'way & 32nd, NE	5.2	676	87	624	1.22	D	91	605	624	1.12	D
			M2	B'way & 32nd, NE	4.8	676	87	576	1.32	D	91	605	576	1.21	D
			S2	B'way & 32nd, NW	6.5	915	115	780	1.32	D	260	733	780	1.27	D
			M1	B'way & 32nd, NW	6.5	915	115	780	1.32	D	260	733	780	1.27	D
	Corridors	N507	GIMB	Gimbels Passageway	14.0	1224	544	2520	0.70	C	769	1244	2835	0.71	C
	Escal-ators	N507	E221	6th btwn 32nd & 33rd, W	2.0	0	2	525	0.00	A	0	246	525	0.47	C
			E222	6th btwn 32nd & 33rd, W	4.0	501	0	1050	0.48	C	198	0	1050	0.19	A
			NEW1	6th & 33rd, SW	4.0	425	0	1050	0.40	C	0	278	1050	0.26	B
			NEW2	6th & 32Nd, NW	4.0	389	0	1050	0.37	B	0	235	1050	0.22	B
	Control Elements	N505	TS1	Two-Way Tunrstile Array	10	1025	72	3840	0.29	B	107	828	3840	0.24	B
			HT1	Two-Way HEET	2	61	24	480	0.18	A	24	406	480	0.89	E
			SG1	Two-Way Service Gate	1	532	1	600	0.89	E	24	1	600	0.04	A
		A22	TS1	Two-Way Tunrstile Array	3	419	113	1152	0.46	C	48	614	1152	0.58	C
			HT1	Two-Way HEET	2	470	169	480	1.33	F	159	105	540	0.49	C
			SG1	Two-Way Service Gate	1	5	3	675	0.01	A	12	6	675	0.03	A
		N506	TS1	Two-Way Tunrstile Array	14	950	537	6048	0.25	B	652	1070	6048	0.28	B
			SG1	Two-Way Service Gate	1	233	12	600	0.41	C	351	4	600	0.59	C
		N507	TS1	Two-Way Tunrstile Array	11	1110	1426	4752	0.53	C	1813	901	4224	0.64	D
			SG1	Two-Way Service Gate	1	32	4	600	0.06	A	9	18	675	0.04	A
		A25K	TS1	Two-Way Tunrstile Array	7	761	634	3024	0.46	C	224	1111	2688	0.50	C
			HT1	Two-Way HEET	3	844	34	720	1.22	F	444	285	810	0.90	E
			SG1	Two-Way Service Gate	1	231	7	600	0.40	B	8	72	600	0.13	A
		PATH	TS1	Two-Way Tunrstile Array	19	2475	546	7296	0.41	C	403	1500	7296	0.26	B
			TS2	One-Way Turnstile (Exit)	3	1933	0	1800	1.07	F	308	0	1800	0.17	A

2014 Future with the Proposed Project - Multi-Tenant Scenario - Subway LOS Analysis

Location					Effective Width (ft) / Quantity	AM					PM				
						Volume Up / Out	Volume Down / In	Capacity	V/C Ratio	LOS	Volume Up / Out	Volume Down / In	Capacity	V/C Ratio	LOS
A/C/E 8th Avenue & 34th Street	Stairs	N68	S15	8th & 35th, NE, E	3.9	134	3	468	0.29	A	16	115	468	0.28	A
			S14	8th & 35th, NE, W	3.1	312	21	372	0.89	C	32	300	372	0.89	C
			P12	8th & 35th, NE, E+W	8.0	446	24	960	0.49	B	48	415	960	0.48	B
			S11	8th & 35th, SE	3.2	161	17	384	0.46	B	39	120	384	0.41	A
			P10	8th & 35th, SE	7.8	161	17	936	0.19	A	39	120	936	0.17	A
		N69	S12	8th & 35th, NW, W	3.1	98	17	372	0.31	A	35	57	419	0.22	A
			S13	8th & 35th, NW, E	3.1	320	36	372	0.96	C	72	229	372	0.81	C
			P11	8th & 35th, NW, E+W	8.0	406	60	960	0.48	B	89	259	960	0.36	A
			S10	8th & 35th, SW	3.3	140	9	396	0.37	A	40	90	396	0.33	A
			P9	8th & 35th, SW	5.0	140	9	600	0.25	A	40	90	600	0.22	A
		N70	S9	8th & 34th, NE	4.5	155	40	540	0.36	A	59	252	540	0.58	B
			P8	8th & 34th, NE	10.0	155	40	1200	0.16	A	59	252	1200	0.26	A
			S7	8th & 34th, SE	6.0	157	128	810	0.35	A	112	213	810	0.40	A
			P6	8th & 34th, SE	5.7	157	128	770	0.37	A	112	213	770	0.42	A
		N71	S8	8th & 34th, NW	4.8	236	30	576	0.46	B	52	147	576	0.35	A
			P7	8th & 34th, NW	7.3	236	30	876	0.30	A	52	147	876	0.23	A
			S6	8th & 34th, SW	4.7	367	74	564	0.78	C	114	311	564	0.75	C
			P5	8th & 34th, SW	10.1	367	74	1212	0.36	A	114	311	1212	0.35	A
		N72	S5	8th & 33rd, NE	3.0	100	14	360	0.32	A	61	122	360	0.51	B
			P4	8th & 33rd, NE	3.4	100	14	408	0.28	A	61	122	408	0.45	A
			S1	8th & 33rd, SE	6.4	225	96	768	0.42	A	148	245	864	0.46	B
			P1	8th & 33rd, SE	6.4	225	96	768	0.42	A	148	245	864	0.46	B
		N73	S4	8th & 33rd, NW	3.4	365	33	408	0.97	C	65	239	408	0.75	C
			P3	8th & 33rd, NW	3.4	365	33	408	0.97	C	65	239	408	0.75	C
			S2	8th & 33rd, SW, W	3.3	332	68	396	1.01	D	213	254	446	1.05	D
			S3	8th & 33rd, SW, E	3.3	236	33	396	0.68	B	119	155	446	0.62	B
			P2	8th & 33rd, SW, E+W	6.1	568	101	732	0.91	C	332	409	824	0.90	C
	Control Elements	N68	TS1	Two-Way Tunrstile Array	3	213	36	1152	0.22	B	4	379	1152	0.33	B
			HT1	Two-Way HEET	2	384	2	480	0.81	E	101	75	540	0.33	B
			SG1	Two-Way Service Gate	1	5	0	600	0.01	A	4	1	600	0.01	A
		N69	TS1	Two-Way Tunrstile Array	3	745	29	1152	0.67	D	32	261	1152	0.25	B
			HT1	Two-Way HEET	2	44	40	540	0.16	A	69	38	540	0.20	A
			SG1	Two-Way Service Gate	1	2	1	675	0.00	A	0	4	600	0.01	A
		N70	TS1	Two-Way Tunrstile Array	5	340	142	1920	0.25	B	199	352	2160	0.25	B
			SG1	Two-Way Service Gate	1	4	4	675	0.01	A	5	5	675	0.02	A
		N71	TS1	Two-Way Tunrstile Array	5	520	86	1920	0.32	B	166	323	2160	0.23	B
			HT1	Two-Way HEET	1	95	17	240	0.47	C	23	16	270	0.14	A
			SG1	Two-Way Service Gate	1	0	1	600	0.00	A	5	6	675	0.02	A
		N72	TS1	Two-Way Tunrstile Array	9	171	1893	3456	0.60	C	584	509	3888	0.28	B
			SG1	Two-Way Service Gate	3	82	4	1800	0.05	A	3	17	1800	0.01	A
		N73	TS1	Two-Way Tunrstile Array	9	323	637	3888	0.25	B	1437	212	3456	0.48	C
			SG1	Two-Way Service Gate	1	2	20	600	0.04	A	5	4	675	0.01	A
		N67	TS1	Two-Way Tunrstile Array	13	483	1622	4992	0.42	C	1174	941	5616	0.38	B
			HT1	Two-Way HEET	2	58	0	480	0.12	A	89	17	480	0.22	B
			SG1	Two-Way Service Gate	1	19	29	675	0.07	A	32	16	675	0.07	A

Location					Effective Width (ft) / Quantity	AM					PM				
						Volume Up / Out	Volume Down / In	Capacity	V/C Ratio	LOS	Volume Up / Out	Volume Down / In	Capacity	V/C Ratio	LOS
1/2/3 7th Avenue & 34th Street	Stairs	R141	S6	7th & 34th, NE	4.1	241	50	492	0.59	B	132	366	492	1.01	D
			P8	7th & 34th, NE	10.8	241	50	1296	0.23	A	132	366	1296	0.38	A
			S4	7th & 34th, SE	8.5	91	33	1020	0.12	A	74	171	1020	0.24	A
			P6	7th & 34th, SE	11.5	91	33	1380	0.09	A	74	171	1380	0.18	A
		R142	S5	7th & 34th, NW	4.6	516	59	552	1.04	D	106	334	552	0.80	C
			P7	7th & 34th, NW	10.7	516	59	1284	0.45	A	106	334	1284	0.34	A
			S3	7th & 34th, SW	4.6	189	31	552	0.40	A	78	74	621	0.25	A
			P5	7th & 34th, SW	10.6	189	31	1272	0.17	A	78	74	1431	0.11	A
		R139	O19	7th & 33rd, NE, E	4.8	181	42	576	0.39	A	99	175	648	0.42	A
			O18	7th & 33rd, NE, E	4.8	181	42	576	0.39	A	99	175	648	0.42	A
			S2	7th & 33rd, NE, W	4.3	284	92	516	0.73	C	285	213	581	0.86	C
			P4	7th & 33rd, NE, W	5.8	284	92	696	0.54	B	285	213	783	0.64	B
			O17	7th & 33rd, SE	8.5	438	93	1020	0.52	B	331	641	1148	0.85	C
			P3	7th & 33rd, SE	9.2	438	93	1104	0.48	B	331	648	1242	0.79	C
		R139X	S1	7th & 33rd, NW	3.4	106	17	408	0.30	A	78	49	459	0.28	A
			P1	7th & 33rd, NW	7.3	106	17	876	0.14	A	78	49	986	0.13	A
			P2	7th & 33rd, NW	3.8	106	17	456	0.27	A	78	49	513	0.25	A
		R137K	O15	7th & 32nd, NE	8.8	298	40	1056	0.32	A	50	361	1056	0.39	A
			O14	7th & 32nd, NE	8.8	298	40	1056	0.32	A	50	361	1056	0.39	A
	Control Elements	R141	TS1	Two-Way Tunrstile Array	7	315	77	2688	0.15	A	196	494	2688	0.26	B
			SG1	Two-Way Service Gate	1	0	4	600	0.01	A	14	11	675	0.04	A
		R142	TS1	Two-Way Tunrstile Array	4	468	71	1536	0.35	B	147	316	1536	0.30	B
			HT1	Two-Way HEET	2	163	7	480	0.35	B	45	23	540	0.13	A
			SG1	Two-Way Service Gate	1	68	0	600	0.11	A	10	3	600	0.02	A
		R139	TS1	Two-Way Tunrstile Array	4	116	378	1536	0.32	B	207	307	1728	0.30	B
			HT1	Two-Way HEET	1	65	12	240	0.32	B	65	8	240	0.30	B
			SG1	Two-Way Service Gate	1	7	2	600	0.01	A	5	10	675	0.02	A
		R139X	HT1	Two-Way HEET	1	85	17	240	0.43	C	48	49	270	0.36	B
			SG1	Two-Way Service Gate	1	20	0	600	0.03	A	30	0	600	0.05	A
		R137K	TS1	Two-Way Tunrstile Array	3	291	33	1152	0.28	B	60	321	1152	0.33	B
			SG1	Two-Way Service Gate	1	1	0	600	0.00	A	1	3	600	0.01	A
		R138	TS1	Two-Way Tunrstile Array	12	204	2253	4608	0.53	C	2256	706	4608	0.64	D
			SG1	Two-Way Service Gate	1	414	3	600	0.70	D	634	7	600	1.07	F
		R135	TS1	Two-Way Tunrstile Array	6	41	1454	2304	0.65	D	1631	217	2304	0.80	E
			SG1	Two-Way Service Gate	1	289	9	600	0.50	C	57	1	600	0.10	A

Location					Effective Width (ft) / Quantity	AM					PM				
						Volume Up / Out	Volume Down / In	Capacity	V/C Ratio	LOS	Volume Up / Out	Volume Down / In	Capacity	V/C Ratio	LOS
B/D/F/V N/Q/R/W PATH 6th Avenue Broadway & 34th Street	Stairs	N505	S8	6th & 35th, NE	3.8	590	52	456	1.41	E	75	468	456	1.19	D
			M8	6th & 35th, NE	8.8	590	52	1056	0.61	B	75	468	1056	0.51	B
			S5	6th & 35th, SE	3.8	264	7	456	0.59	B	36	130	456	0.36	A
			M9	6th & 35th, SE	3.8	264	7	456	0.59	B	36	130	456	0.36	A
			M10	6th & 35th, SE	8.7	264	7	1044	0.26	A	36	130	1044	0.16	A
			S7	6th & 35th, NW	4.8	482	16	576	0.87	C	39	231	576	0.47	B
			M7	6th & 35th, NW	8.5	482	16	1020	0.49	B	39	231	1020	0.27	A
			S6	B'way & 35th, NW	3.9	605	9	468	1.31	D	41	476	468	1.10	D
			M6	B'way & 35th, NW	6.6	605	9	792	0.78	C	41	476	792	0.65	B
			S4	B'way & 35th, SW	3.9	23	7	468	0.06	A	21	112	468	0.28	A
			M5	B'way & 35th, SW	6.8	23	7	816	0.04	A	21	112	816	0.16	A
		A22	S3	6th & 34th, NE	4.2	221	30	504	0.50	B	95	362	504	0.91	C
			M8	6th & 34th, NE	13.0	221	30	1560	0.16	A	95	362	1560	0.29	A
			S4	6th & 34th, SE	4.4	650	72	528	1.37	E	218	476	528	1.31	D
			M4	6th & 34th, SE	4.4	650	72	528	1.37	E	218	476	528	1.31	D
		N506	S7	B'way & 34th, NW	7.4	783	138	888	1.04	D	345	745	888	1.23	D
			M7	B'way & 34th, NW	7.4	783	138	888	1.04	D	345	745	888	1.23	D
			S5	B'way & 34th, SW	8.2	867	421	984	1.31	D	607	814	1107	1.28	D
			M5	B'way & 34th, SW	8.2	867	421	984	1.31	D	607	814	1107	1.28	D
		N507	307	6th & 32nd, NW	8.0	123	10	960	0.14	A	161	77	960	0.25	A
			NEW1	6th & 33rd, SW	8.0	139	124	1080	0.24	A	338	92	960	0.45	A
		A25K	300	6th & 32nd, NE	4.0	266	65	480	0.69	B	99	375	480	0.99	C
			S1	B'way & 32nd, NE	5.2	676	87	624	1.22	D	91	605	624	1.12	D
			M2	B'way & 32nd, NE	4.8	676	87	576	1.32	D	91	605	576	1.21	D
			S2	B'way & 32nd, NW	6.5	912	115	780	1.32	D	262	733	780	1.28	D
			M1	B'way & 32nd, NW	6.5	912	115	780	1.32	D	262	733	780	1.28	D
	Corridors	N507	GIMB	Gimbels Passageway	14.0	1225	501	2520	0.68	C	759	1268	2835	0.72	C
	Escal-ators	N507	E221	6th btwn 32nd & 33rd, W	2.0	0	2	525	0.00	A	0	243	525	0.46	C
			E222	6th btwn 32nd & 33rd, W	4.0	489	0	1050	0.47	C	204	0	1050	0.19	A
			NEW1	6th & 33rd, SW	4.0	416	0	1050	0.40	B	0	276	1050	0.26	B
			NEW2	6th & 32Nd, NW	4.0	370	0	1050	0.35	B	0	230	1050	0.22	B
	Control Elements	N505	TS1	Two-Way Tunrstile Array	10	1025	72	3840	0.29	B	107	828	3840	0.24	B
			HT1	Two-Way HEET	2	61	24	480	0.18	A	24	406	480	0.89	E
			SG1	Two-Way Service Gate	1	532	1	600	0.89	E	24	1	600	0.04	A
		A22	TS1	Two-Way Tunrstile Array	3	419	113	1152	0.46	C	48	614	1152	0.58	C
			HT1	Two-Way HEET	2	470	169	480	1.33	F	159	105	540	0.49	C
			SG1	Two-Way Service Gate	1	5	3	675	0.01	A	12	6	675	0.03	A
		N506	TS1	Two-Way Tunrstile Array	14	931	537	6048	0.24	B	660	1066	6048	0.29	B
			SG1	Two-Way Service Gate	1	229	12	600	0.40	C	356	4	600	0.60	C
		N507	TS1	Two-Way Tunrstile Array	11	1065	1427	4752	0.52	C	1839	891	4224	0.65	D
			SG1	Two-Way Service Gate	1	31	4	600	0.06	A	9	17	675	0.04	A
		A25K	TS1	Two-Way Tunrstile Array	7	721	634	3024	0.45	C	243	1103	2688	0.50	C
			HT1	Two-Way HEET	3	844	34	720	1.22	F	451	283	810	0.91	E
			SG1	Two-Way Service Gate	1	225	7	600	0.39	B	8	71	600	0.13	A
		PATH	TS1	Two-Way Tunrstile Array	19	2471	546	7296	0.41	C	404	1495	7296	0.26	B
			TS2	One-Way Turnstile (Exit)	3	1930	0	1800	1.07	F	309	0	1800	0.17	A

2014 Future with the Proposed Project - Single-Tenant Office Scenario - Subway Impact Assessment

Location					Effective Width (ft) / Quantity	AM							PM						
						Volume Up / Out	Volume Down / In	Capacity	V/C Ratio	LOS	WIT (Inches)	Impact?	Volume Up / Out	Volume Down / In	Capacity	V/C Ratio	LOS	WIT (Inches)	Impact?
A/C/E 8th Avenue & 34th Street	Stairs	N68	S15	8th & 35th, NE, E	0.0	0	0	0	0.00	A	0.00	No	0	0	0	0.00	A	0.00	No
			S14	8th & 35th, NE, W	0.0	0	0	0	0.00	C	0.00	No	0	0	0	0.00	C	0.00	No
			P12	8th & 35th, NE, E+W	0.0	0	0	0	0.00	B	0.00	No	0	0	0	0.00	B	0.00	No
			S11	8th & 35th, SE	0.0	0	0	0	0.00	B	0.00	No	0	0	0	0.00	A	0.00	No
			P10	8th & 35th, SE	0.0	0	0	0	0.00	A	0.00	No	0	0	0	0.00	A	0.00	No
		N69	S12	8th & 35th, NW, W	0.0	0	0	0	0.00	A	0.00	No	0	0	0	0.00	A	0.00	No
			S13	8th & 35th, NW, E	0.0	0	0	0	0.00	C	0.00	No	0	0	0	0.00	C	0.00	No
			P11	8th & 35th, NW, E+W	0.0	0	0	0	0.00	B	0.00	No	0	0	0	0.00	A	0.00	No
			S10	8th & 35th, SW	0.0	0	0	0	0.00	A	0.00	No	0	0	0	0.00	A	0.00	No
			P9	8th & 35th, SW	0.0	0	0	0	0.00	A	0.00	No	0	0	0	0.00	A	0.00	No
		N70	S9	8th & 34th, NE	0.0	0	0	0	0.00	A	0.00	No	0	0	0	0.00	B	0.00	No
			P8	8th & 34th, NE	0.0	0	0	0	0.00	A	0.00	No	0	0	0	0.00	A	0.00	No
			S7	8th & 34th, SE	0.0	0	0	0	0.00	A	0.00	No	0	0	0	0.00	A	0.00	No
			P6	8th & 34th, SE	0.0	0	0	0	0.00	A	0.00	No	0	0	0	0.00	A	0.00	No
		N71	S8	8th & 34th, NW	0.0	0	0	0	0.00	B	0.00	No	0	0	0	0.00	A	0.00	No
			P7	8th & 34th, NW	0.0	0	0	0	0.00	A	0.00	No	0	0	0	0.00	A	0.00	No
			S6	8th & 34th, SW	0.0	0	0	0	0.00	C	0.00	No	0	0	0	0.00	C	0.00	No
			P5	8th & 34th, SW	0.0	0	0	0	0.00	A	0.00	No	0	0	0	0.00	A	0.00	No
		N72	S5	8th & 33rd, NE	0.0	0	0	0	0.00	A	0.00	No	0	0	0	0.00	B	0.00	No
			P4	8th & 33rd, NE	0.0	0	0	0	0.00	A	0.00	No	0	0	0	0.00	A	0.00	No
			S1	8th & 33rd, SE	0.0	24	0	0	0.03	A	0.00	No	0	23	0	0.03	A	0.00	No
			P1	8th & 33rd, SE	0.0	24	0	0	0.03	A	0.00	No	0	23	0	0.03	A	0.00	No
		N73	S4	8th & 33rd, NW	0.0	0	0	0	0.00	C	0.00	No	0	0	0	0.00	C	0.00	No
			P3	8th & 33rd, NW	0.0	0	0	0	0.00	C	0.00	No	0	0	0	0.00	C	0.00	No
			S2	8th & 33rd, SW, W	0.0	3	0	0	0.01	D	0.30	No	0	3	0	0.01	D	0.24	No
			S3	8th & 33rd, SW, E	0.0	21	0	0	0.05	B-->C	0.00	No	0	20	0	0.04	B	0.00	No
			P2	8th & 33rd, SW, E+W	0.0	24	0	0	0.03	C	0.00	No	0	23	0	0.03	C	0.00	No
	Control Elements	N68	TS1	Two-Way Tunrstile Array	0.0	0	0	0	0.00	B		No	0	0	0	0.00	B		No
			HT1	Two-Way HEET	0.0	0	0	0	0.00	E		No	0	0	0	0.00	B		No
			SG1	Two-Way Service Gate	0.0	0	0	0	0.00	A		No	0	0	0	0.00	A		No
		N69	TS1	Two-Way Tunrstile Array	0.0	0	0	0	0.00	D		No	0	0	0	0.00	B		No
			HT1	Two-Way HEET	0.0	0	0	0	0.00	A		No	0	0	0	0.00	A		No
			SG1	Two-Way Service Gate	0.0	0	0	0	0.00	A		No	0	0	0	0.00	A		No
		N70	TS1	Two-Way Tunrstile Array	0.0	0	0	0	0.00	B		No	0	0	0	0.00	B		No
			SG1	Two-Way Service Gate	0.0	0	0	0	0.00	A		No	0	0	0	0.00	A		No
		N71	TS1	Two-Way Tunrstile Array	0.0	0	0	0	0.00	B		No	0	0	0	0.00	B		No
			HT1	Two-Way HEET	0.0	0	0	0	0.00	C		No	0	0	0	0.00	A		No
			SG1	Two-Way Service Gate	0.0	0	0	0	0.00	A		No	0	0	0	0.00	A		No
		N72	TS1	Two-Way Tunrstile Array	0.0	16	0	0	0.00	C-->D		No	0	22	0	0.01	B		No
			SG1	Two-Way Service Gate	0.0	8	0	0	0.00	A		No	0	1	0	0.00	A		No
		N73	TS1	Two-Way Tunrstile Array	0.0	24	0	432	-0.02	B		No	0	22	0	0.01	C		No
			SG1	Two-Way Service Gate	0.0	0	0	0	0.00	A		No	0	0	0	0.00	A		No
		N67	TS1	Two-Way Tunrstile Array	0.0	10	0	0	0.00	C		No	0	11	0	0.00	B		No
			HT1	Two-Way HEET	0.0	1	0	0	0.00	A		No	0	0	0	0.00	B		No
			SG1	Two-Way Service Gate	0.0	0	0	0	0.00	A		No	0	0	0	0.00	A		No

Location					Effective Width (ft) / Quantity	AM							PM						
						Volume Up / Out	Volume Down / In	Capacity	V/C Ratio	LOS	WIT (Inches)	Impact?	Volume Up / Out	Volume Down / In	Capacity	V/C Ratio	LOS	WIT (Inches)	Impact?
1/2/3 7th Avenue & 34th Street	Stairs	R141	S6	7th & 34th, NE	0.0	0	0	0	0.00	B	0.00	No	0	0	0	0.00	D	0.00	No
			P8	7th & 34th, NE	0.0	0	0	0	0.00	A	0.00	No	0	0	0	0.00	A	0.00	No
			S4	7th & 34th, SE	0.0	0	0	0	0.00	A	0.00	No	0	0	0	0.00	A	0.00	No
			P6	7th & 34th, SE	0.0	0	0	0	0.00	A	0.00	No	0	0	0	0.00	A	0.00	No
		R142	S5	7th & 34th, NW	0.0	0	0	0	0.00	D	0.00	No	0	0	0	0.00	C	0.00	No
			P7	7th & 34th, NW	0.0	0	0	0	0.00	A	0.00	No	0	0	0	0.00	A	0.00	No
			S3	7th & 34th, SW	0.0	0	0	0	0.00	A	0.00	No	0	0	0	0.00	A	0.00	No
			P5	7th & 34th, SW	0.0	0	0	0	0.00	A	0.00	No	0	0	0	0.00	A	0.00	No
		R139	O19	7th & 33rd, NE, E	0.0	31	33	0	0.11	A	0.00	No	88	18	72	0.13	A	0.00	No
			O18	7th & 33rd, NE, E	0.0	31	33	0	0.11	A	0.00	No	88	18	72	0.13	A	0.00	No
			S2	7th & 33rd, NE, W	0.0	49	46	0	0.18	B-->C	0.00	No	131	28	0	0.27	B-->C	0.00	No
			P4	7th & 33rd, NE, W	0.0	49	46	0	0.14	A-->B	0.00	No	131	28	0	0.20	A-->B	0.00	No
			O17	7th & 33rd, SE	0.0	194	76	0	0.26	A-->B	0.00	No	212	154	0	0.36	B-->C	0.00	No
			P3	7th & 33rd, SE	0.0	194	76	0	0.24	A-->B	0.00	No	212	163	0	0.34	B-->C	0.00	No
		R139X	S1	7th & 33rd, NW	0.0	-19	-5	0	-0.06	A	0.00	No	-16	-14	0	-0.06	A	0.00	No
			P1	7th & 33rd, NW	0.0	-19	-5	0	-0.03	A	0.00	No	-16	-14	0	-0.03	A	0.00	No
			P2	7th & 33rd, NW	0.0	-19	-5	0	-0.05	A	0.00	No	-16	-14	0	-0.06	A	0.00	No
		R137K	O15	7th & 32nd, NE	0.0	28	-8	0	0.02	A	0.00	No	-22	38	0	0.01	A	0.00	No
			O14	7th & 32nd, NE	0.0	28	-8	0	0.02	A	0.00	No	-22	38	0	0.01	A	0.00	No
	Control Elements	R141	TS1	Two-Way Tunrstile Array	0.0	0	0	0	0.00	A		No	0	0	0	0.00	B		No
			SG1	Two-Way Service Gate	0.0	0	0	0	0.00	A		No	0	0	0	0.00	A		No
		R142	TS1	Two-Way Tunrstile Array	0.0	0	0	0	0.00	B		No	0	0	0	0.00	B		No
			HT1	Two-Way HEET	0.0	0	0	0	0.00	B		No	0	0	0	0.00	A		No
			SG1	Two-Way Service Gate	0.0	0	0	0	0.00	A		No	0	0	0	0.00	A		No
		R139	TS1	Two-Way Tunrstile Array	0.0	73	13	0	0.06	B		No	28	93	0	0.07	B		No
			HT1	Two-Way HEET	0.0	41	0	0	0.17	B		No	9	2	0	0.05	B		No
			SG1	Two-Way Service Gate	0.0	4	0	-75	0.01	A		No	1	3	-75	0.01	A		No
		R139X	HT1	Two-Way HEET	0.0	-15	-5	0	-0.08	C		No	-10	-14	0	-0.09	C-->B		No
			SG1	Two-Way Service Gate	0.0	-4	0	0	-0.01	A		No	-6	0	0	-0.01	A		No
		R137K	TS1	Two-Way Tunrstile Array	0.0	28	-8	0	0.02	B		No	-22	37	0	0.01	B		No
			SG1	Two-Way Service Gate	0.0	0	0	0	0.00	A		No	0	0	0	0.00	A		No
		R138	TS1	Two-Way Tunrstile Array	0.0	0	0	0	0.00	C		No	0	0	0	0.00	D		No
			SG1	Two-Way Service Gate	0.0	0	0	0	0.00	D		No	0	0	0	0.00	F		No
		R135	TS1	Two-Way Tunrstile Array	0.0	4	0	0	0.00	D		No	0	30	0	0.01	D		No
			SG1	Two-Way Service Gate	0.0	28	0	0	0.05	C		No	0	0	0	0.00	A		No

Location					Effective Width (ft) / Quantity	AM							PM						
						Volume Up / Out	Volume Down / In	Capacity	V/C Ratio	LOS	WIT (Inches)	Impact?	Volume Up / Out	Volume Down / In	Capacity	V/C Ratio	LOS	WIT (Inches)	Impact?
B/D/F/V N/Q/R/W PATH 6th Avenue Broadway & 34th Street	Stairs	N505	S8	6th & 35th, NE	0.0	0	0	0	0.00	E	0.00	No	0	0	0	0.00	D	0.00	No
			M8	6th & 35th, NE	0.0	0	0	0	0.00	B	0.00	No	0	0	0	0.00	B	0.00	No
			S5	6th & 35th, SE	0.0	0	0	0	0.00	B	0.00	No	0	0	0	0.00	A	0.00	No
			M9	6th & 35th, SE	0.0	0	0	0	0.00	B	0.00	No	0	0	0	0.00	A	0.00	No
			M10	6th & 35th, SE	0.0	0	0	0	0.00	A	0.00	No	0	0	0	0.00	A	0.00	No
			S7	6th & 35th, NW	0.0	0	0	0	0.00	C	0.00	No	0	0	0	0.00	B	0.00	No
			M7	6th & 35th, NW	0.0	0	0	0	0.00	B	0.00	No	0	0	0	0.00	A	0.00	No
			S6	B'way & 35th, NW	0.0	0	0	0	0.00	D	0.00	No	0	0	0	0.00	D	0.00	No
			M6	B'way & 35th, NW	0.0	0	0	0	0.00	C	0.00	No	0	0	0	0.00	B	0.00	No
			S4	B'way & 35th, SW	0.0	0	0	0	0.00	A	0.00	No	0	0	0	0.00	A	0.00	No
			M5	B'way & 35th, SW	0.0	0	0	0	0.00	A	0.00	No	0	0	0	0.00	A	0.00	No
		A22	S3	6th & 34th, NE	0.0	0	0	0	0.00	B	0.00	No	0	0	0	0.00	C	0.00	No
			M8	6th & 34th, NE	0.0	0	0	0	0.00	A	0.00	No	0	0	0	0.00	A	0.00	No
			S4	6th & 34th, SE	0.0	0	0	0	0.00	E	0.00	No	0	0	0	0.00	D	0.00	No
			M4	6th & 34th, SE	0.0	0	0	0	0.00	E	0.00	No	0	0	0	0.00	D	0.00	No
		N506	S7	B'way & 34th, NW	0.0	23	0	0	0.03	D	2.30	No	3	12	0	0.02	D	1.28	No
			M7	B'way & 34th, NW	0.0	23	0	0	0.03	D	2.30	No	3	12	0	0.02	D	1.28	No
			S5	B'way & 34th, SW	0.0	55	-6	-123	0.19	D	3.81	No	-23	43	0	0.02	D	1.41	No
			M5	B'way & 34th, SW	0.0	55	-6	-123	0.19	D	3.81	No	-23	43	0	0.02	D	1.41	No
		N507	307	6th & 32nd, NW	3.3	-408	-96	396	-1.00	D-->A	0.00	No	-164	-251	446	-0.80	D-->A	0.00	No
		A25K	300	6th & 32nd, NE	0.0	-19	-122	-60	-0.18	C	0.00	No	-124	-30	-60	-0.18	D-->C	0.00	No
			S1	B'way & 32nd, NE	0.0	0	0	0	0.00	D	0.00	No	0	0	0	0.00	D	0.00	No
			M2	B'way & 32nd, NE	0.0	0	0	0	0.00	D	0.00	No	0	0	0	0.00	D	0.00	No
			S2	B'way & 32nd, NW	0.0	5	0	0	0.01	D	0.35	No	0	4	0	0.01	D	0.35	No
			M1	B'way & 32nd, NW	0.0	5	0	0	0.01	D	0.35	No	0	4	0	0.01	D	0.35	No
	Escal-ators	N507	E221	6th btwn 32nd & 33rd, W	0.0	0	-50	0	-0.09	A		No	0	-17	0	-0.03	C		No
			E222	6th btwn 32nd & 33rd, W	0.0	-24	0	0	-0.02	C		No	-112	0	0	-0.11	B-->A		No
	Control Elements	N505	TS1	Two-Way Tunrstile Array	0.0	0	0	0	0.00	B		No	0	0	0	0.00	B		No
			HT1	Two-Way HEET	0.0	0	0	0	0.00	A		No	0	0	0	0.00	E		No
			SG1	Two-Way Service Gate	0.0	0	0	0	0.00	E		No	0	0	0	0.00	A		No
		A22	TS1	Two-Way Tunrstile Array	0.0	0	0	0	0.00	C		No	0	0	0	0.00	C		No
			HT1	Two-Way HEET	0.0	0	0	0	0.00	F		No	0	0	0	0.00	C		No
			SG1	Two-Way Service Gate	0.0	0	0	0	0.00	A		No	0	0	0	0.00	A		No
		N506	TS1	Two-Way Tunrstile Array	0.0	-7	12	0	0.00	B		No	-50	10	0	-0.01	B		No
			SG1	Two-Way Service Gate	0.0	-2	0	0	0.00	C		No	-27	0	0	-0.04	D-->C		No
		N507	TS1	Two-Way Tunrstile Array	0.0	115	2	0	0.02	C		No	80	96	0	0.04	D		No
			SG1	Two-Way Service Gate	0.0	3	0	0	0.01	A		No	0	2	0	0.00	A		No
		A25K	TS1	Two-Way Tunrstile Array	0.0	63	-13	0	0.02	C		No	-3	51	0	0.02	C		No
			HT1	Two-Way HEET	0.0	2	-1	0	0.00	F		No	-1	13	0	0.01	E		No
			SG1	Two-Way Service Gate	0.0	9	0	0	0.02	B		No	0	3	0	0.01	A		No
		PATH	TS1	Two-Way Tunrstile Array	0.0	6	0	0	0.00	C		No	0	10	0	0.00	B		No
			TS2	One-Way Turnstile (Exit)	0.0	5	0	0	0.00	F		No	0	0	0	0.00	A		No

2014 Future with the Proposed Project - Multi-Tenant Office Scenario - Subway Impact Assessment

Location					Effective Width (ft) / Quantity	AM							PM						
						Volume Up / Out	Volume Down / In	Capacity	V/C Ratio	LOS	WIT (Inches)	Impact?	Volume Up / Out	Volume Down / In	Capacity	V/C Ratio	LOS	WIT (Inches)	Impact?
A/C/E 8th Avenue & 34th Street	Stairs	N68	S15	8th & 35th, NE, E	0.0	0	0	0	0.00	A	0.00	No	0	0	0	0.00	A	0.00	No
			S14	8th & 35th, NE, W	0.0	0	0	0	0.00	C	0.00	No	0	0	0	0.00	C	0.00	No
			P12	8th & 35th, NE, E+W	0.0	0	0	0	0.00	B	0.00	No	0	0	0	0.00	B	0.00	No
			S11	8th & 35th, SE	0.0	0	0	0	0.00	B	0.00	No	0	0	0	0.00	A	0.00	No
			P10	8th & 35th, SE	0.0	0	0	0	0.00	A	0.00	No	0	0	0	0.00	A	0.00	No
		N69	S12	8th & 35th, NW, W	0.0	0	0	0	0.00	A	0.00	No	0	0	0	0.00	A	0.00	No
			S13	8th & 35th, NW, E	0.0	0	0	0	0.00	C	0.00	No	0	0	0	0.00	C	0.00	No
			P11	8th & 35th, NW, E+W	0.0	0	0	0	0.00	B	0.00	No	0	0	0	0.00	A	0.00	No
			S10	8th & 35th, SW	0.0	0	0	0	0.00	A	0.00	No	0	0	0	0.00	A	0.00	No
			P9	8th & 35th, SW	0.0	0	0	0	0.00	A	0.00	No	0	0	0	0.00	A	0.00	No
		N70	S9	8th & 34th, NE	0.0	0	0	0	0.00	A	0.00	No	0	0	0	0.00	B	0.00	No
			P8	8th & 34th, NE	0.0	0	0	0	0.00	A	0.00	No	0	0	0	0.00	A	0.00	No
			S7	8th & 34th, SE	0.0	0	0	0	0.00	A	0.00	No	0	0	0	0.00	A	0.00	No
			P6	8th & 34th, SE	0.0	0	0	0	0.00	A	0.00	No	0	0	0	0.00	A	0.00	No
		N71	S8	8th & 34th, NW	0.0	0	0	0	0.00	B	0.00	No	0	0	0	0.00	A	0.00	No
			P7	8th & 34th, NW	0.0	0	0	0	0.00	A	0.00	No	0	0	0	0.00	A	0.00	No
			S6	8th & 34th, SW	0.0	0	0	0	0.00	C	0.00	No	0	0	0	0.00	C	0.00	No
			P5	8th & 34th, SW	0.0	0	0	0	0.00	A	0.00	No	0	0	0	0.00	A	0.00	No
		N72	S5	8th & 33rd, NE	0.0	0	0	0	0.00	A	0.00	No	0	0	0	0.00	B	0.00	No
			P4	8th & 33rd, NE	0.0	0	0	0	0.00	A	0.00	No	0	0	0	0.00	A	0.00	No
			S1	8th & 33rd, SE	0.0	9	0	0	0.01	A	0.00	No	9	20	0	0.03	A-->B	0.00	No
			P1	8th & 33rd, SE	0.0	9	0	0	0.01	A	0.00	No	9	20	0	0.03	A-->B	0.00	No
		N73	S4	8th & 33rd, NW	0.0	0	0	0	0.00	C	0.00	No	0	0	0	0.00	C	0.00	No
			P3	8th & 33rd, NW	0.0	0	0	0	0.00	C	0.00	No	0	0	0	0.00	C	0.00	No
			S2	8th & 33rd, SW, W	0.0	1	0	0	0.00	D	0.11	No	1	2	0	0.01	D	0.30	No
			S3	8th & 33rd, SW, E	0.0	8	0	0	0.02	B	0.00	No	8	17	0	0.06	B	0.00	No
			P2	8th & 33rd, SW, E+W	0.0	9	0	0	0.01	C	0.00	No	9	20	0	0.03	C	0.00	No
	Control Elements	N68	TS1	Two-Way Tunrstile Array	0.0	0	0	0	0.00	B		No	0	0	0	0.00	B		No
			HT1	Two-Way HEET	0.0	0	0	0	0.00	E		No	0	0	0	0.00	B		No
			SG1	Two-Way Service Gate	0.0	0	0	0	0.00	A		No	0	0	0	0.00	A		No
		N69	TS1	Two-Way Tunrstile Array	0.0	0	0	0	0.00	D		No	0	0	0	0.00	B		No
			HT1	Two-Way HEET	0.0	0	0	0	0.00	A		No	0	0	0	0.00	A		No
			SG1	Two-Way Service Gate	0.0	0	0	0	0.00	A		No	0	0	0	0.00	A		No
		N70	TS1	Two-Way Tunrstile Array	0.0	0	0	0	0.00	B		No	0	0	0	0.00	B		No
			SG1	Two-Way Service Gate	0.0	0	0	0	0.00	A		No	0	0	0	0.00	A		No
		N71	TS1	Two-Way Tunrstile Array	0.0	0	0	0	0.00	B		No	0	0	0	0.00	B		No
			HT1	Two-Way HEET	0.0	0	0	0	0.00	C		No	0	0	0	0.00	A		No
			SG1	Two-Way Service Gate	0.0	0	0	0	0.00	A		No	0	0	0	0.00	A		No
		N72	TS1	Two-Way Tunrstile Array	0.0	6	0	0	0.00	C		No	9	19	0	0.01	B		No
			SG1	Two-Way Service Gate	0.0	3	0	0	0.00	A		No	0	1	0	0.00	A		No
		N73	TS1	Two-Way Tunrstile Array	0.0	9	0	432	-0.03	B		No	9	19	0	0.01	C		No
			SG1	Two-Way Service Gate	0.0	0	0	0	0.00	A		No	0	0	0	0.00	A		No
		N67	TS1	Two-Way Tunrstile Array	0.0	4	0	0	0.00	C		No	4	9	0	0.00	B		No
			HT1	Two-Way HEET	0.0	0	0	0	0.00	A		No	0	0	0	0.00	B		No
			SG1	Two-Way Service Gate	0.0	0	0	0	0.00	A		No	0	0	0	0.00	A		No

Location					Effective Width (ft) / Quantity	AM							PM						
						Volume Up / Out	Volume Down / In	Capacity	V/C Ratio	LOS	WIT (Inches)	Impact?	Volume Up / Out	Volume Down / In	Capacity	V/C Ratio	LOS	WIT (Inches)	Impact?
1/2/3 7th Avenue & 34th Street	Stairs	R141	S6	7th & 34th, NE	0.0	0	0	0	0.00	B	0.00	No	0	0	0	0.00	D	0.00	No
			P8	7th & 34th, NE	0.0	0	0	0	0.00	A	0.00	No	0	0	0	0.00	A	0.00	No
			S4	7th & 34th, SE	0.0	0	0	0	0.00	A	0.00	No	0	0	0	0.00	A	0.00	No
			P6	7th & 34th, SE	0.0	0	0	0	0.00	A	0.00	No	0	0	0	0.00	A	0.00	No
		R142	S5	7th & 34th, NW	0.0	0	0	0	0.00	D	0.00	No	0	0	0	0.00	C	0.00	No
			P7	7th & 34th, NW	0.0	0	0	0	0.00	A	0.00	No	0	0	0	0.00	A	0.00	No
			S3	7th & 34th, SW	0.0	0	0	0	0.00	A	0.00	No	0	0	0	0.00	A	0.00	No
			P5	7th & 34th, SW	0.0	0	0	0	0.00	A	0.00	No	0	0	0	0.00	A	0.00	No
		R139	O19	7th & 33rd, NE, E	0.0	31	33	0	0.11	A	0.00	No	88	18	72	0.13	A	0.00	No
			O18	7th & 33rd, NE, E	0.0	31	33	0	0.11	A	0.00	No	88	18	72	0.13	A	0.00	No
			S2	7th & 33rd, NE, W	0.0	49	46	0	0.18	B-->C	0.00	No	131	28	0	0.27	B-->C	0.00	No
			P4	7th & 33rd, NE, W	0.0	49	46	0	0.14	A-->B	0.00	No	131	28	0	0.20	A-->B	0.00	No
			O17	7th & 33rd, SE	0.0	111	77	0	0.18	A-->B	0.00	No	258	137	128	0.28	B-->C	0.00	No
			P3	7th & 33rd, SE	0.0	111	77	0	0.17	A-->B	0.00	No	258	144	138	0.27	B-->C	0.00	No
		R139X	S1	7th & 33rd, NW	0.0	-19	-5	0	-0.06	A	0.00	No	-16	-14	0	-0.06	A	0.00	No
			P1	7th & 33rd, NW	0.0	-19	-5	0	-0.03	A	0.00	No	-16	-14	0	-0.03	A	0.00	No
			P2	7th & 33rd, NW	0.0	-19	-5	0	-0.05	A	0.00	No	-16	-14	0	-0.06	A	0.00	No
		R137K	O15	7th & 32nd, NE	0.0	-12	-7	0	-0.02	A	0.00	No	1	29	0	0.03	A	0.00	No
			O14	7th & 32nd, NE	0.0	-12	-7	0	-0.02	A	0.00	No	1	29	0	0.03	A	0.00	No
	Control Elements	R141	TS1	Two-Way Tunrstile Array	0.0	0	0	0	0.00	A		No	0	0	0	0.00	B		No
			SG1	Two-Way Service Gate	0.0	0	0	0	0.00	A		No	0	0	0	0.00	A		No
		R142	TS1	Two-Way Tunrstile Array	0.0	0	0	0	0.00	B		No	0	0	0	0.00	B		No
			HT1	Two-Way HEET	0.0	0	0	0	0.00	B		No	0	0	0	0.00	A		No
			SG1	Two-Way Service Gate	0.0	0	0	0	0.00	A		No	0	0	0	0.00	A		No
		R139	TS1	Two-Way Tunrstile Array	0.0	48	13	0	0.04	B		No	46	85	0	0.08	B		No
			HT1	Two-Way HEET	0.0	27	0	0	0.11	B		No	14	2	0	0.07	B		No
			SG1	Two-Way Service Gate	0.0	3	0	-75	0.01	A		No	1	3	0	0.01	A		No
		R139X	HT1	Two-Way HEET	0.0	-15	-5	0	-0.08	C		No	-10	-14	0	-0.09	C-->B		No
			SG1	Two-Way Service Gate	0.0	-4	0	0	-0.01	A		No	-6	0	0	-0.01	A		No
		R137K	TS1	Two-Way Tunrstile Array	0.0	-12	-7	0	-0.02	B		No	1	29	0	0.03	B		No
			SG1	Two-Way Service Gate	0.0	0	0	0	0.00	A		No	0	0	0	0.00	A		No
		R138	TS1	Two-Way Tunrstile Array	0.0	0	0	0	0.00	C		No	0	0	0	0.00	D		No
			SG1	Two-Way Service Gate	0.0	0	0	0	0.00	D		No	0	0	0	0.00	F		No
		R135	TS1	Two-Way Tunrstile Array	0.0	1	0	0	0.00	D		No	11	26	0	0.02	D-->E		No
			SG1	Two-Way Service Gate	0.0	10	0	0	0.02	C		No	0	0	0	0.00	A		No

Location					Effective Width (ft) / Quantity	AM							PM						
						Volume Up / Out	Volume Down / In	Capacity	V/C Ratio	LOS	WIT (Inches)	Impact?	Volume Up / Out	Volume Down / In	Capacity	V/C Ratio	LOS	WIT (Inches)	Impact?
B/D/F/V N/Q/R/W PATH 6th Avenue Broadway & 34th Street	Stairs	N505	S8	6th & 35th, NE	0.0	0	0	0	0.00	E	0.00	No	0	0	0	0.00	D	0.00	No
			M8	6th & 35th, NE	0.0	0	0	0	0.00	B	0.00	No	0	0	0	0.00	B	0.00	No
			S5	6th & 35th, SE	0.0	0	0	0	0.00	B	0.00	No	0	0	0	0.00	A	0.00	No
			M9	6th & 35th, SE	0.0	0	0	0	0.00	B	0.00	No	0	0	0	0.00	A	0.00	No
			M10	6th & 35th, SE	0.0	0	0	0	0.00	A	0.00	No	0	0	0	0.00	A	0.00	No
			S7	6th & 35th, NW	0.0	0	0	0	0.00	C	0.00	No	0	0	0	0.00	B	0.00	No
			M7	6th & 35th, NW	0.0	0	0	0	0.00	B	0.00	No	0	0	0	0.00	A	0.00	No
			S6	B'way & 35th, NW	0.0	0	0	0	0.00	D	0.00	No	0	0	0	0.00	D	0.00	No
			M6	B'way & 35th, NW	0.0	0	0	0	0.00	C	0.00	No	0	0	0	0.00	B	0.00	No
			S4	B'way & 35th, SW	0.0	0	0	0	0.00	A	0.00	No	0	0	0	0.00	A	0.00	No
			M5	B'way & 35th, SW	0.0	0	0	0	0.00	A	0.00	No	0	0	0	0.00	A	0.00	No
		A22	S3	6th & 34th, NE	0.0	0	0	0	0.00	B	0.00	No	0	0	0	0.00	C	0.00	No
			M8	6th & 34th, NE	0.0	0	0	0	0.00	A	0.00	No	0	0	0	0.00	A	0.00	No
			S4	6th & 34th, SE	0.0	0	0	0	0.00	E	0.00	No	0	0	0	0.00	D	0.00	No
			M4	6th & 34th, SE	0.0	0	0	0	0.00	E	0.00	No	0	0	0	0.00	D	0.00	No
		N506	S7	B'way & 34th, NW	0.0	23	0	0	0.03	D	2.30	No	3	12	0	0.02	D	1.28	No
			M7	B'way & 34th, NW	0.0	23	0	0	0.03	D	2.30	No	3	12	0	0.02	D	1.28	No
			S5	B'way & 34th, SW	0.0	43	-6	-123	0.18	D	2.92	No	-16	40	0	0.02	D	1.71	No
			M5	B'way & 34th, SW	0.0	43	-6	-123	0.18	D	2.92	No	-16	40	0	0.02	D	1.71	No
		N507	307	6th & 32nd, NW	3.3	-414	-96	396	-1.00	D-->A	0.00	No	-150	-253	326	-0.76	D-->A	0.00	No
		A25K	300	6th & 32nd, NE	0.0	-35	-122	-60	-0.21	C-->B	0.00	No	-116	-34	-60	-0.17	D-->C	0.00	No
			S1	B'way & 32nd, NE	0.0	0	0	0	0.00	D	0.00	No	0	0	0	0.00	D	0.00	No
			M2	B'way & 32nd, NE	0.0	0	0	0	0.00	D	0.00	No	0	0	0	0.00	D	0.00	No
			S2	B'way & 32nd, NW	0.0	2	0	0	0.00	D	0.13	No	2	4	0	0.01	D	0.43	No
			M1	B'way & 32nd, NW	0.0	2	0	0	0.00	D	0.13	No	2	4	0	0.01	D	0.43	No
	Escal-ators	N507	E221	6th btwn 32nd & 33rd, W	0.0	0	-49	0	-0.09	A		No	0	-20	0	-0.04	C		No
			E222	6th btwn 32nd & 33rd, W	0.0	-36	0	0	-0.03	C		No	-105	0	0	-0.10	B-->A		No
	Control Elements	N505	TS1	Two-Way Tunrstile Array	0.0	0	0	0	0.00	B		No	0	0	0	0.00	B		No
			HT1	Two-Way HEET	0.0	0	0	0	0.00	A		No	0	0	0	0.00	E		No
			SG1	Two-Way Service Gate	0.0	0	0	0	0.00	E		No	0	0	0	0.00	A		No
		A22	TS1	Two-Way Tunrstile Array	0.0	0	0	0	0.00	C		No	0	0	0	0.00	C		No
			HT1	Two-Way HEET	0.0	0	0	0	0.00	F		No	0	0	0	0.00	C		No
			SG1	Two-Way Service Gate	0.0	0	0	0	0.00	A		No	0	0	0	0.00	A		No
		N506	TS1	Two-Way Tunrstile Array	0.0	-26	12	0	0.00	B		No	-41	5	0	-0.01	B		No
			SG1	Two-Way Service Gate	0.0	-6	0	0	-0.01	C		No	-22	0	0	-0.04	D-->C		No
		N507	TS1	Two-Way Tunrstile Array	0.0	70	3	0	0.02	C		No	107	86	0	0.05	D		No
			SG1	Two-Way Service Gate	0.0	2	0	0	0.00	A		No	1	2	0	0.00	A		No
		A25K	TS1	Two-Way Tunrstile Array	0.0	22	-13	0	0.00	C		No	17	43	0	0.02	C		No
			HT1	Two-Way HEET	0.0	2	-1	0	0.00	F		No	6	11	0	0.02	E		No
			SG1	Two-Way Service Gate	0.0	3	0	0	0.01	B		No	0	3	0	0.01	A		No
		PATH	TS1	Two-Way Tunrstile Array	0.0	2	0	0	0.00	C		No	0	5	0	0.00	B		No
			TS2	One-Way Turnstile (Exit)	0.0	2	0	0	0.00	F		No	0	0	0	0.00	A		No

APPENDIX C.5
Pedestrian Analyses

2008 Existing - Pedestrian Volume
AM Peak 15 Minutes

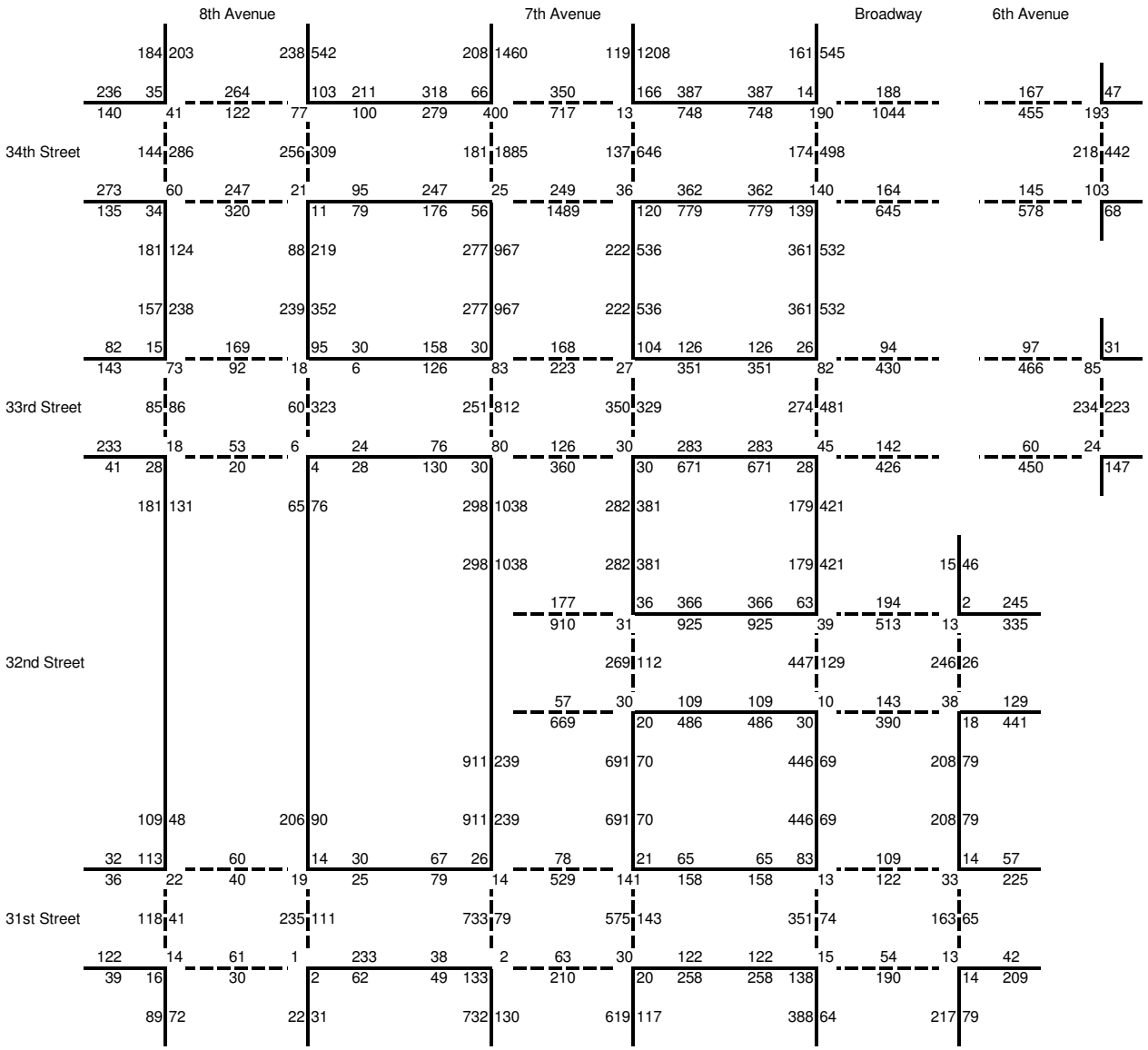

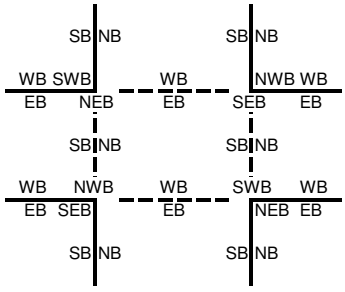

2008 Existing - Pedestrian Volume
MD Peak 15 Minutes

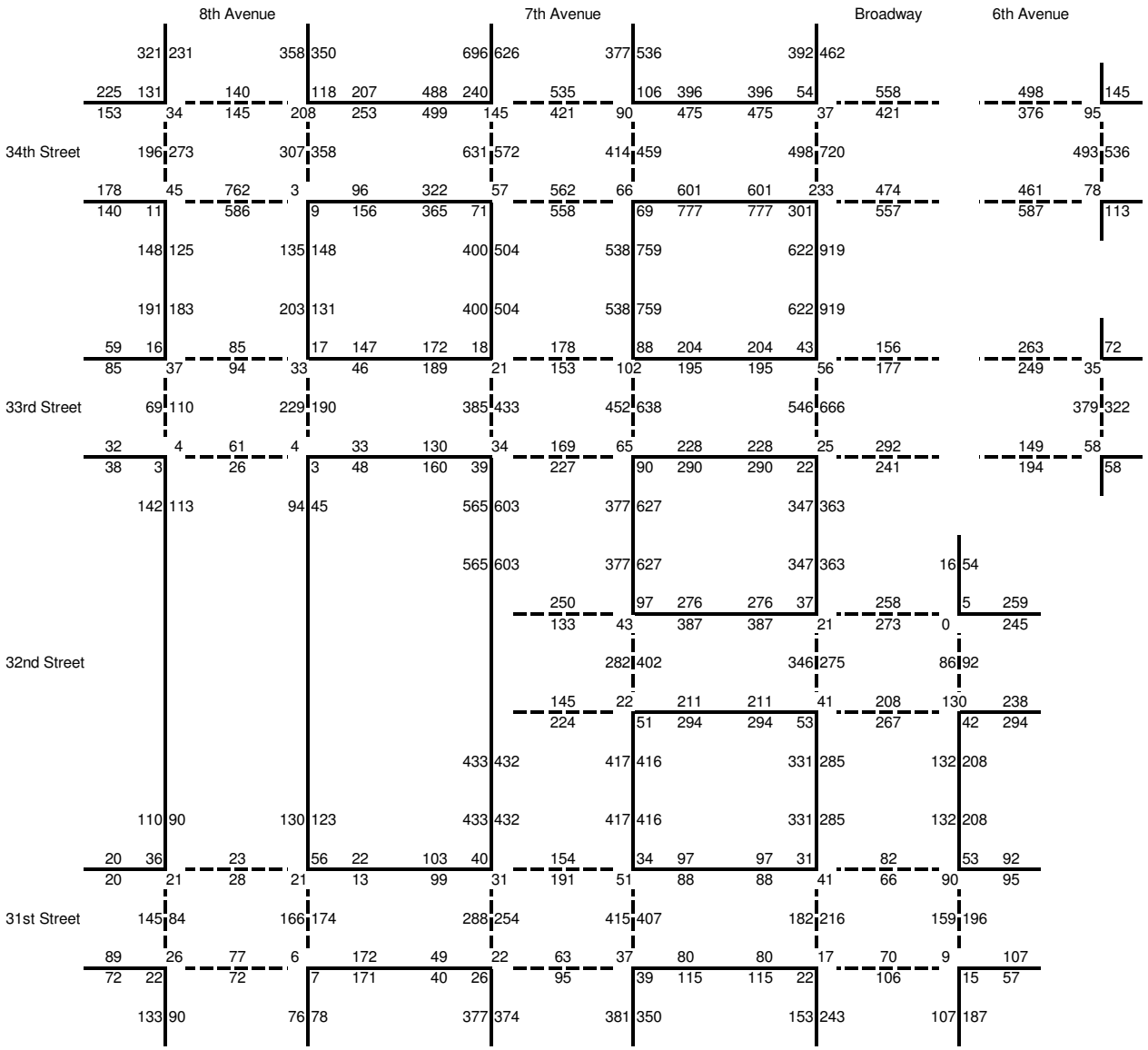

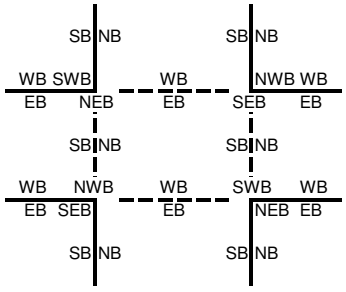

2008 Existing - Pedestrian Volume
PM Peak 15 Minutes

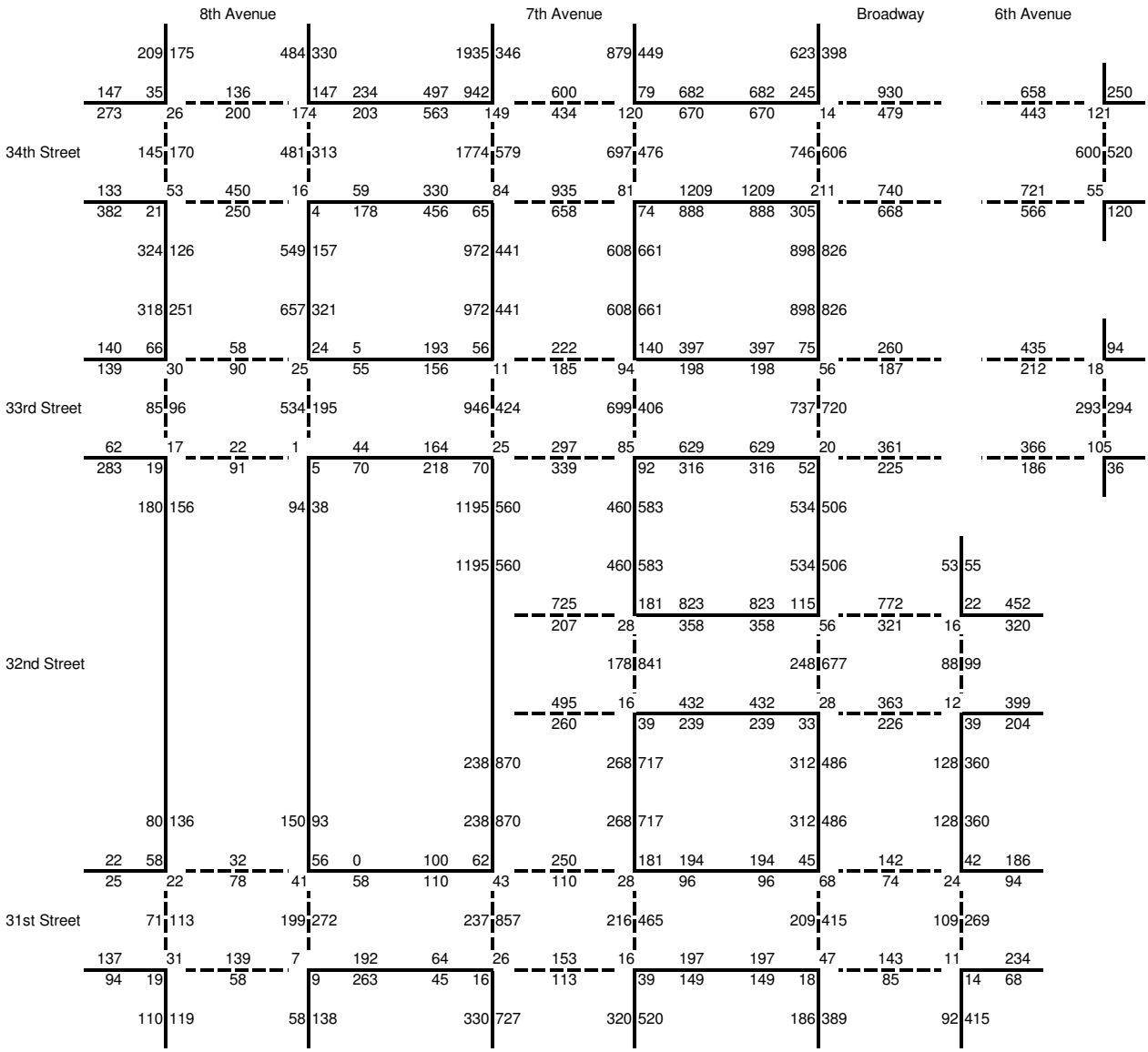

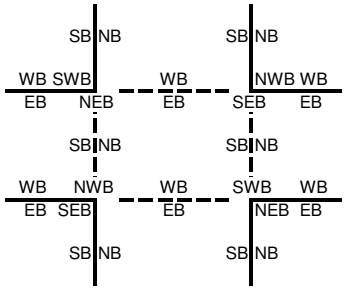

2008 Existing - Pedestrian Volume
SAT Peak 15 Minutes

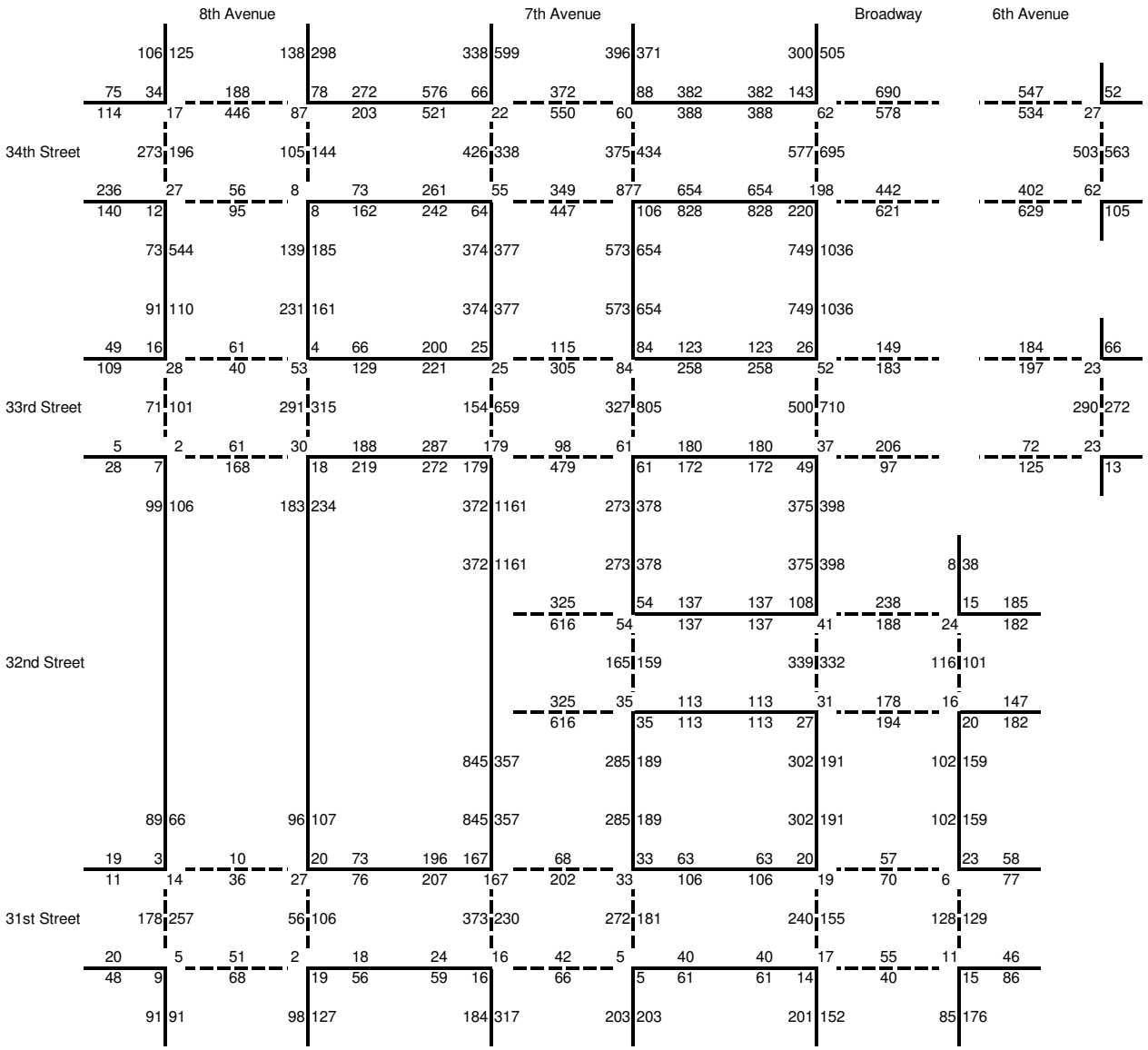

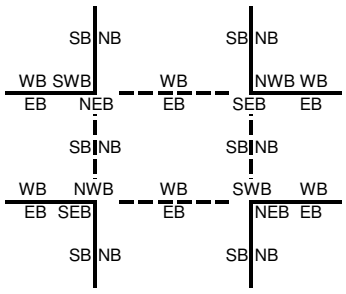

2014 No Action - Pedestrian Volume
AM Peak 15 Minutes

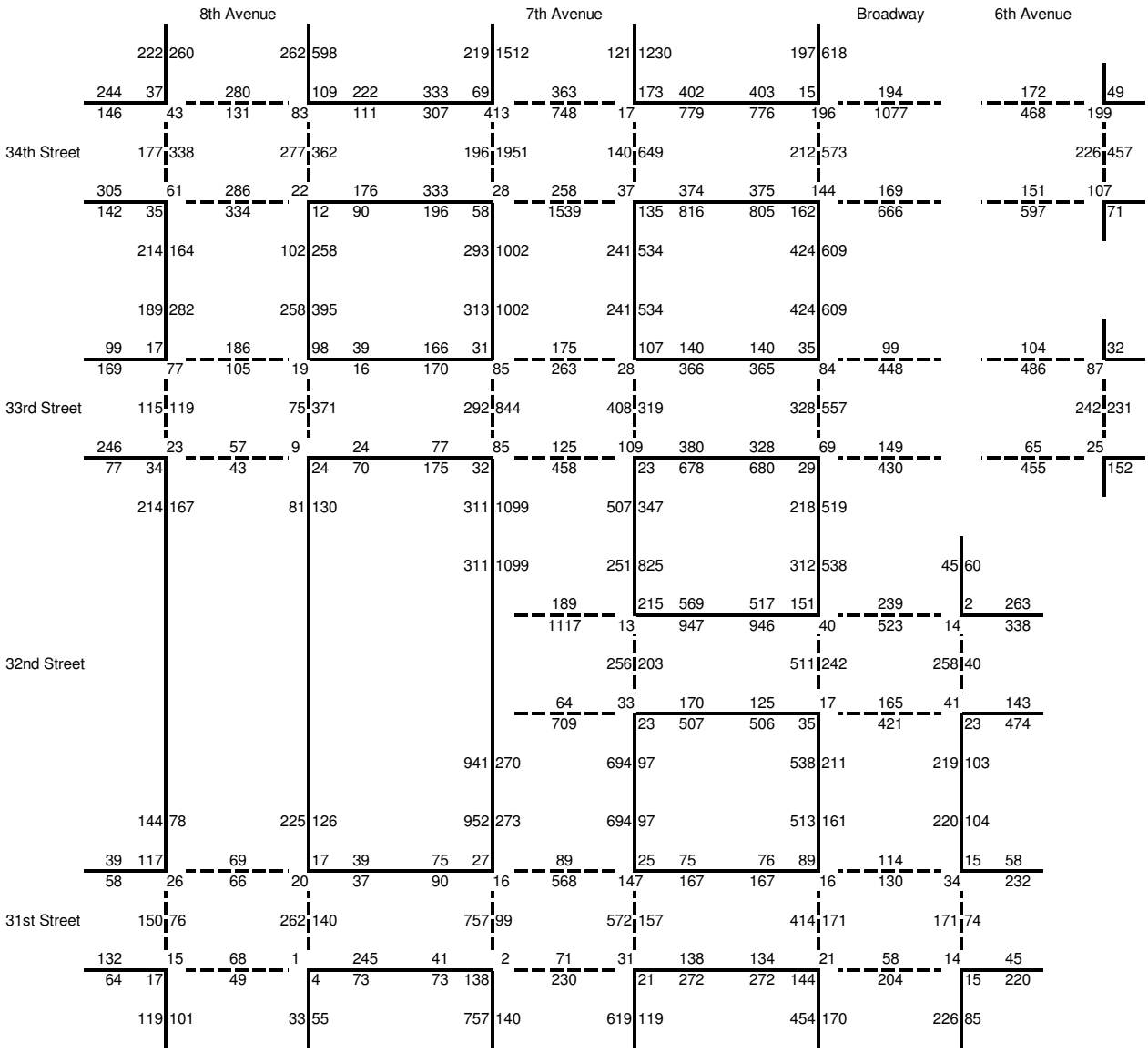

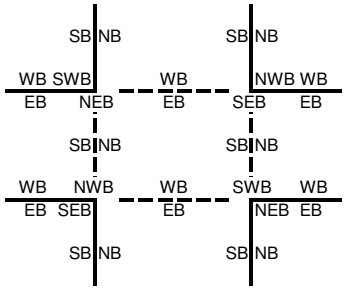

2014 No Action - Pedestrian Volume
MD Peak 15 Minutes

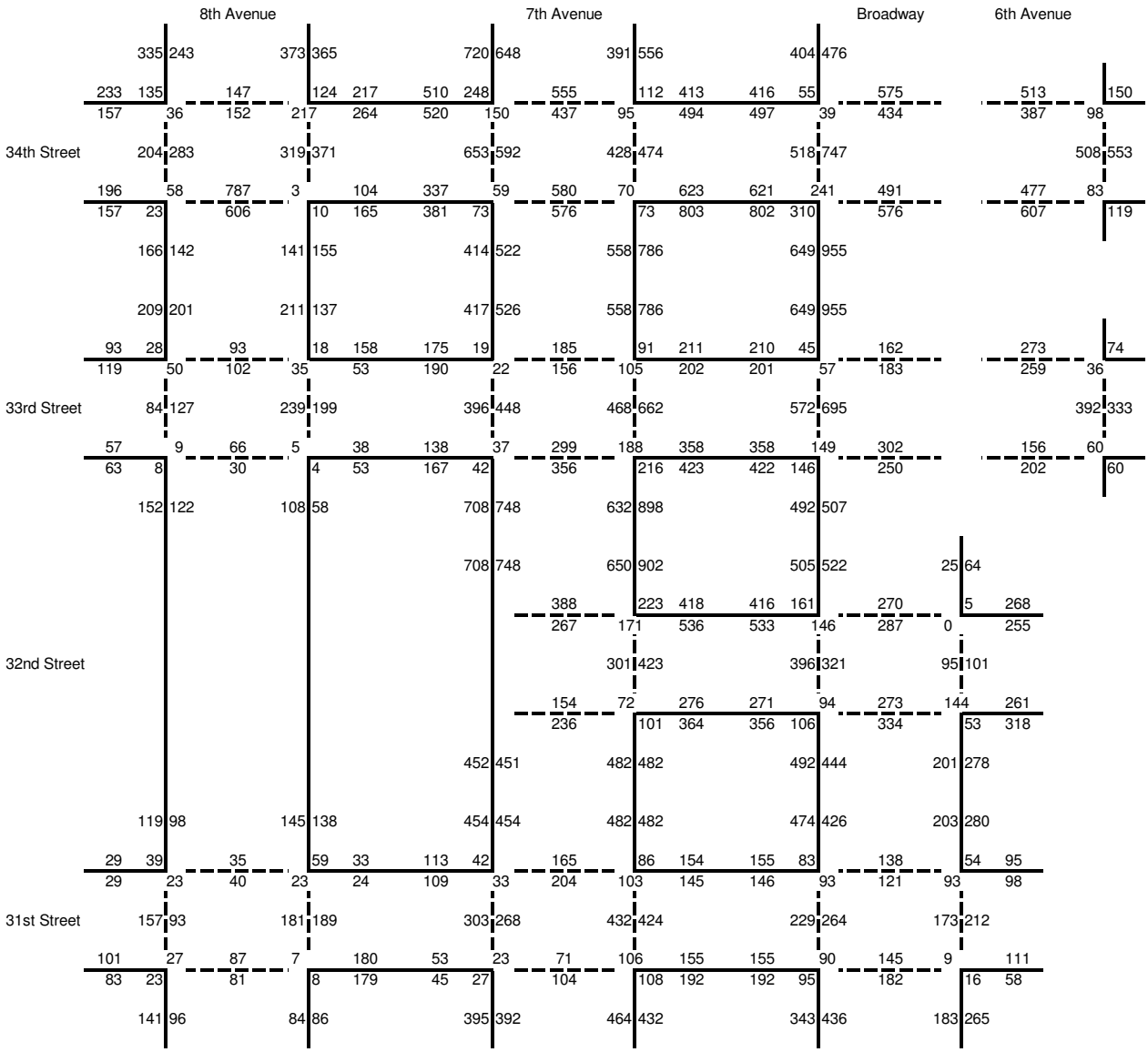

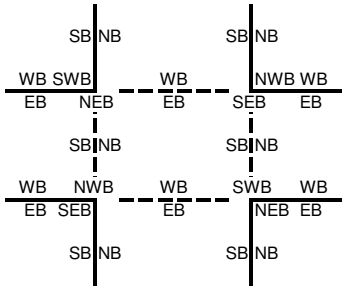

2014 No Action - Pedestrian Volume
PM Peak 15 Minutes

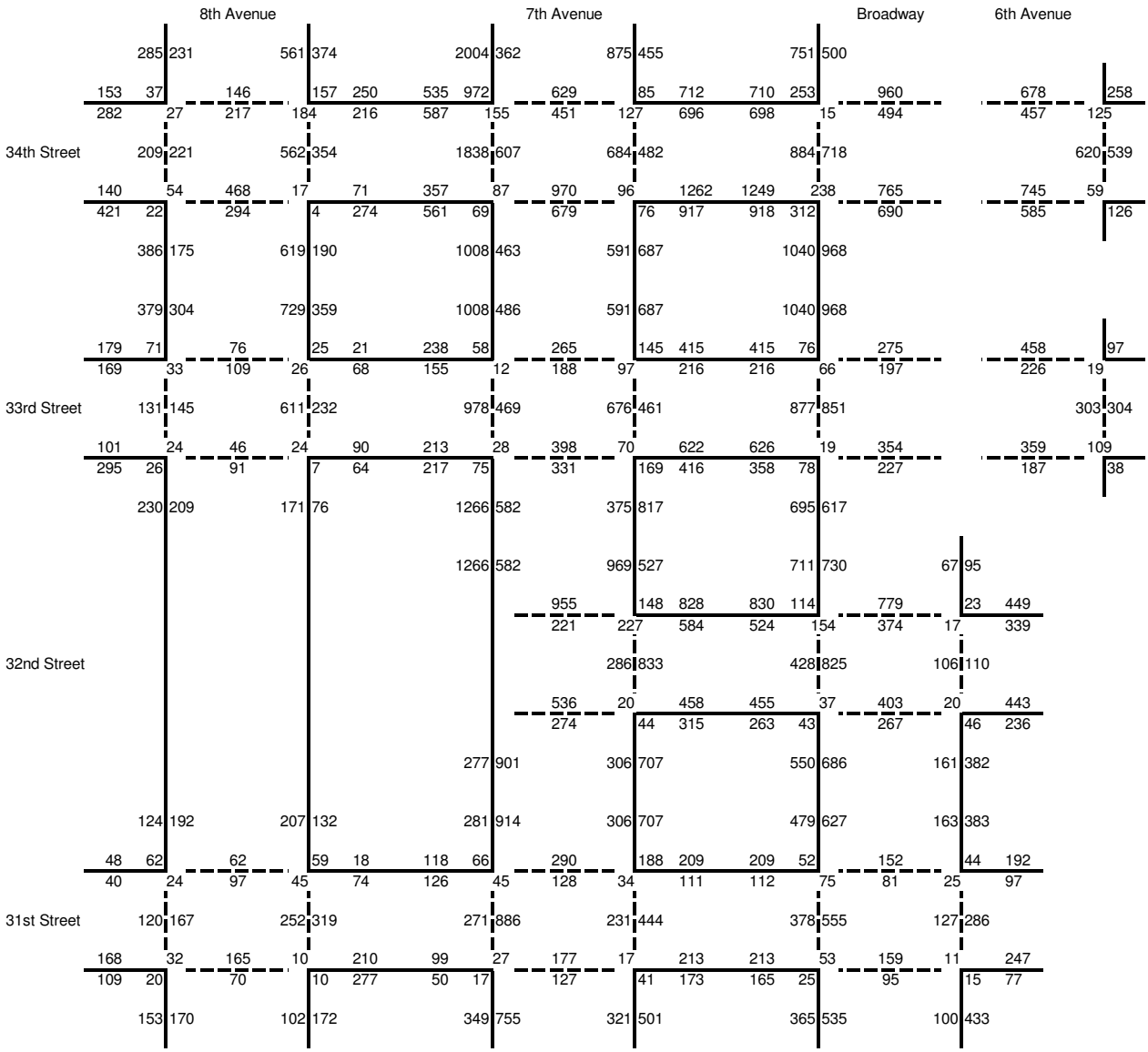

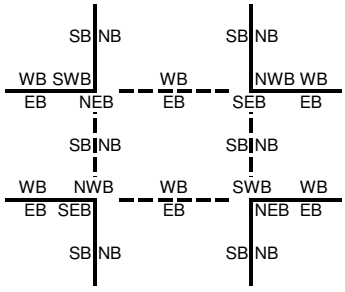

2014 No Action - Pedestrian Volume
SAT Peak 15 Minutes

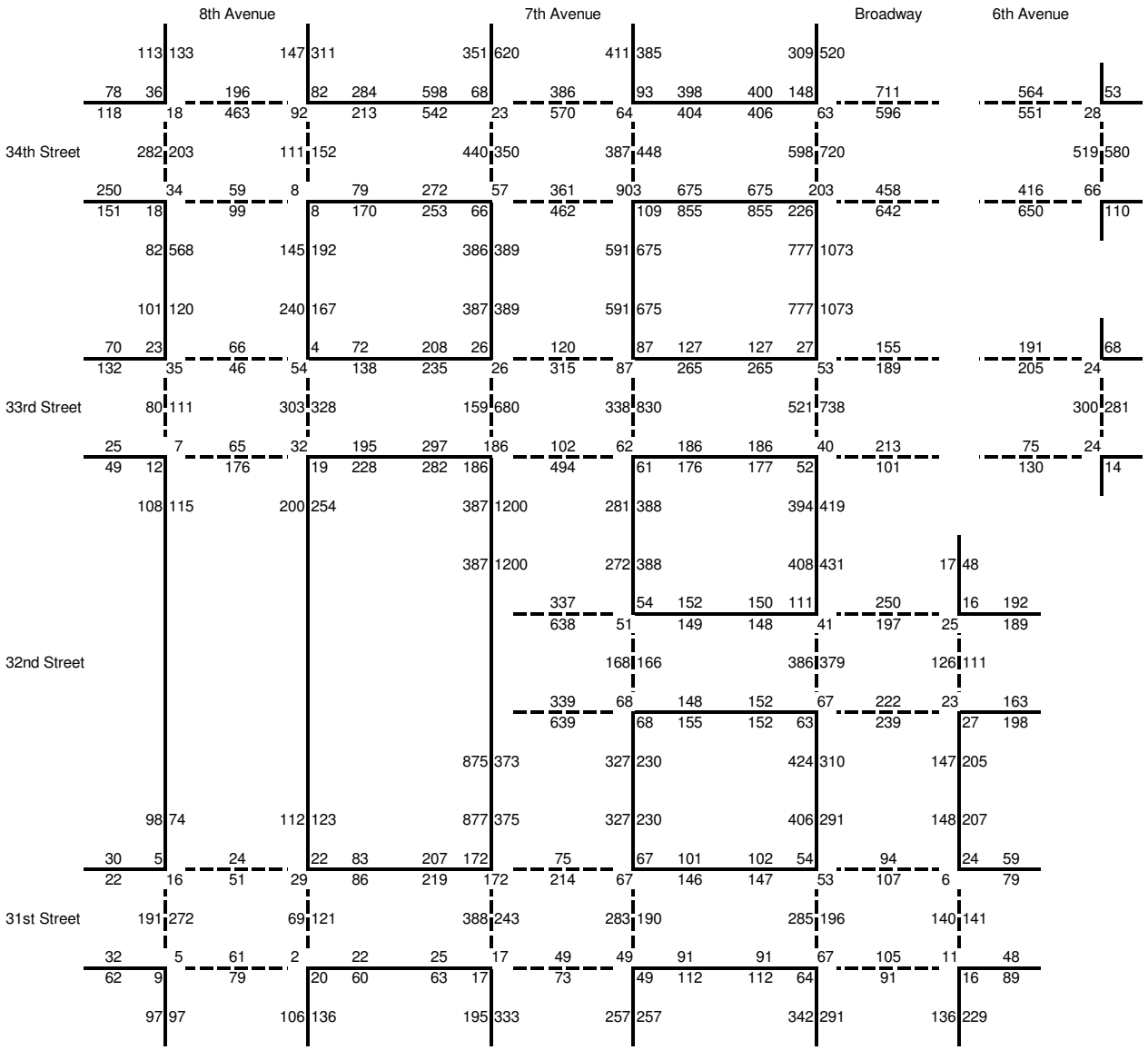

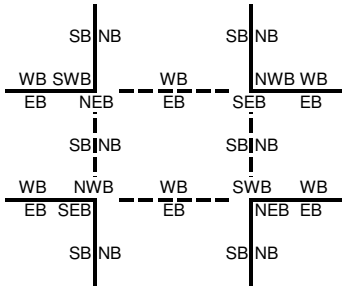

2014 Future with the Proposed Project - Single-Tenant Office Scenario - Pedestrian Volume
AM Peak 15 Minutes

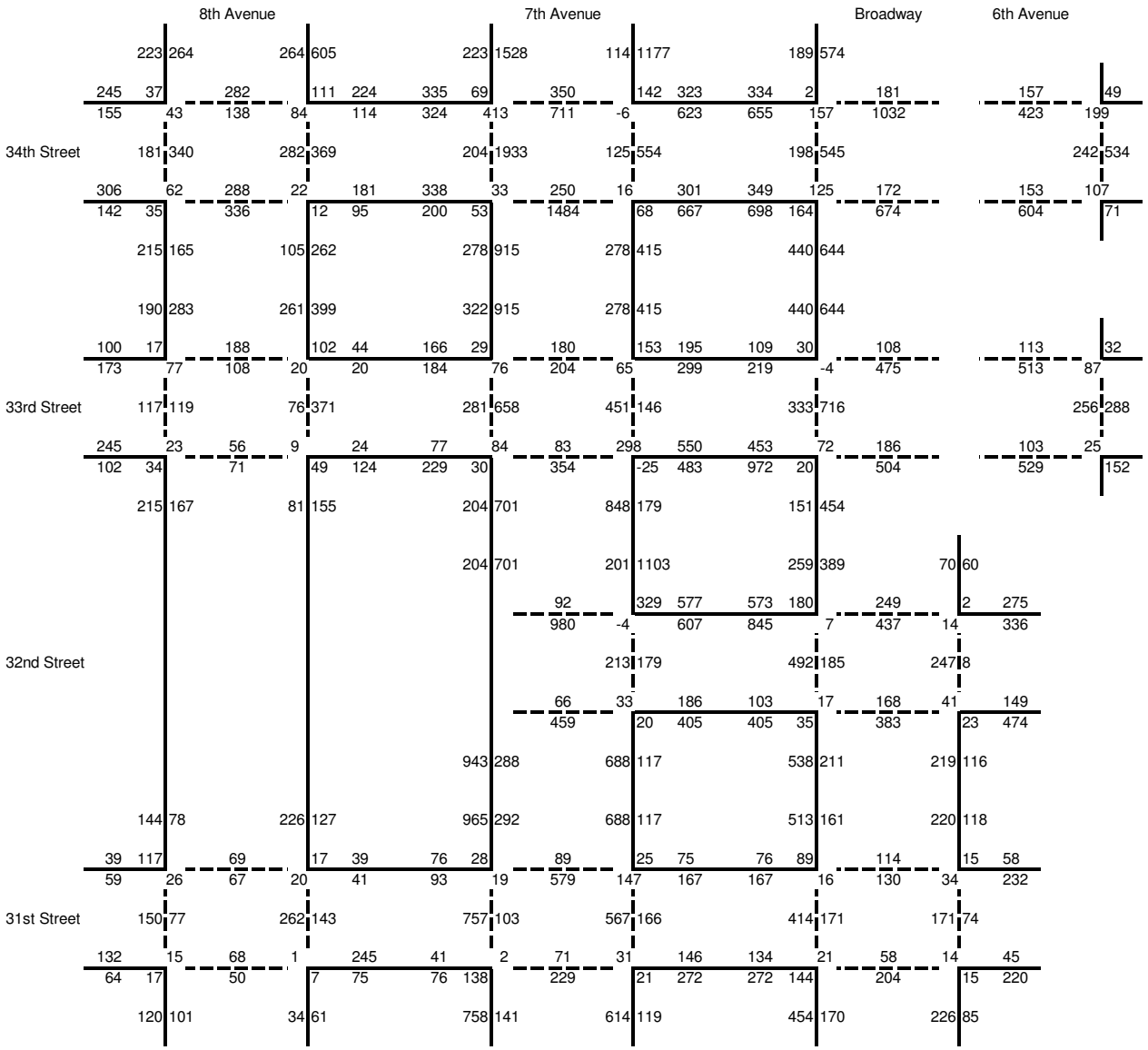

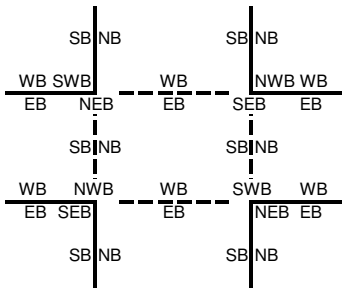

2014 Future with the Proposed Project - Single-Tenant Office Scenario - Pedestrian Volume
MD Peak 15 Minutes

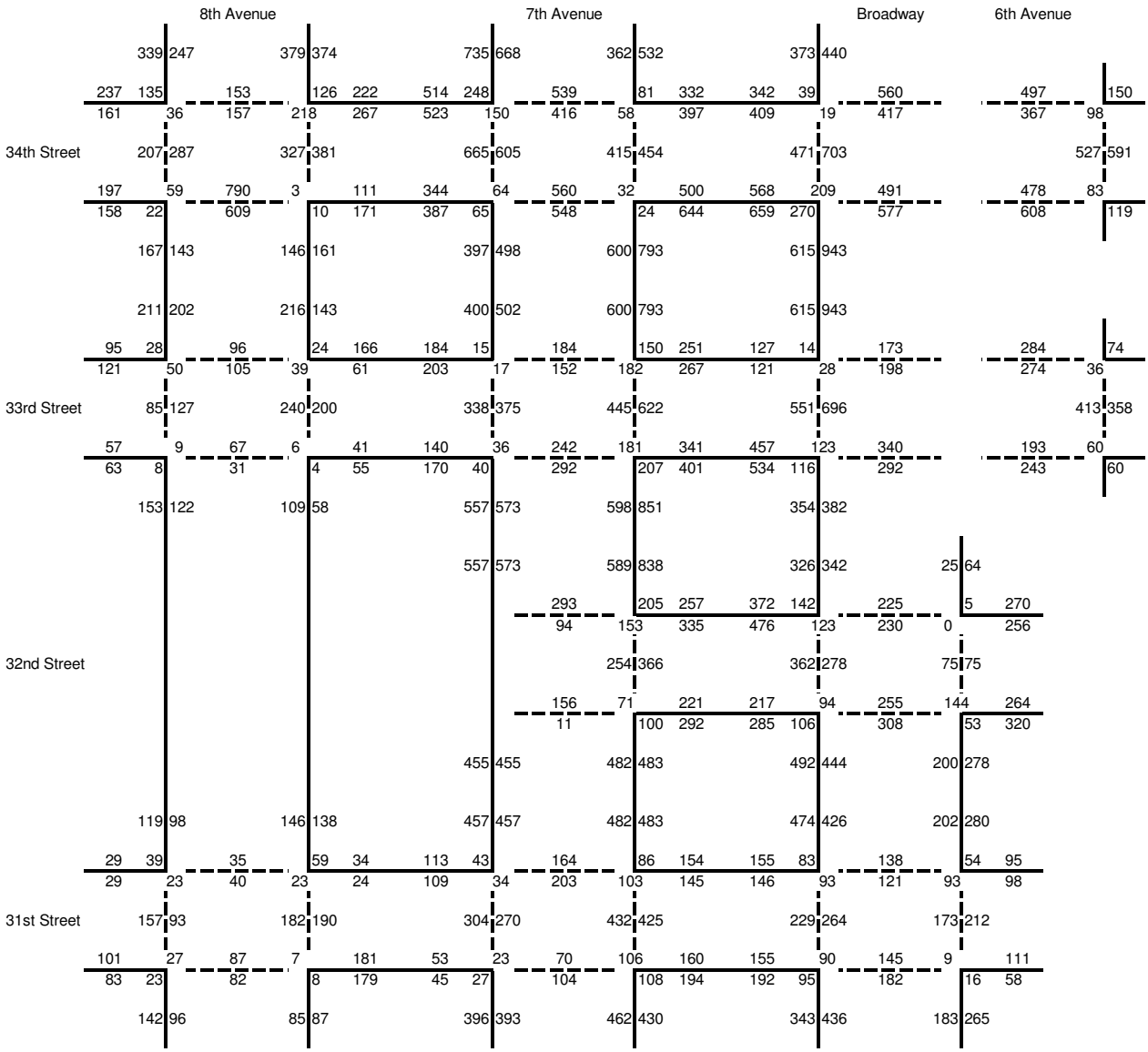

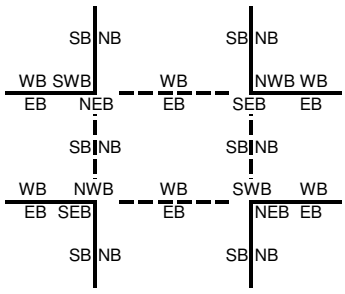

2014 Future with the Proposed Project - Single-Tenant Office Scenario - Pedestrian Volume
PM Peak 15 Minutes

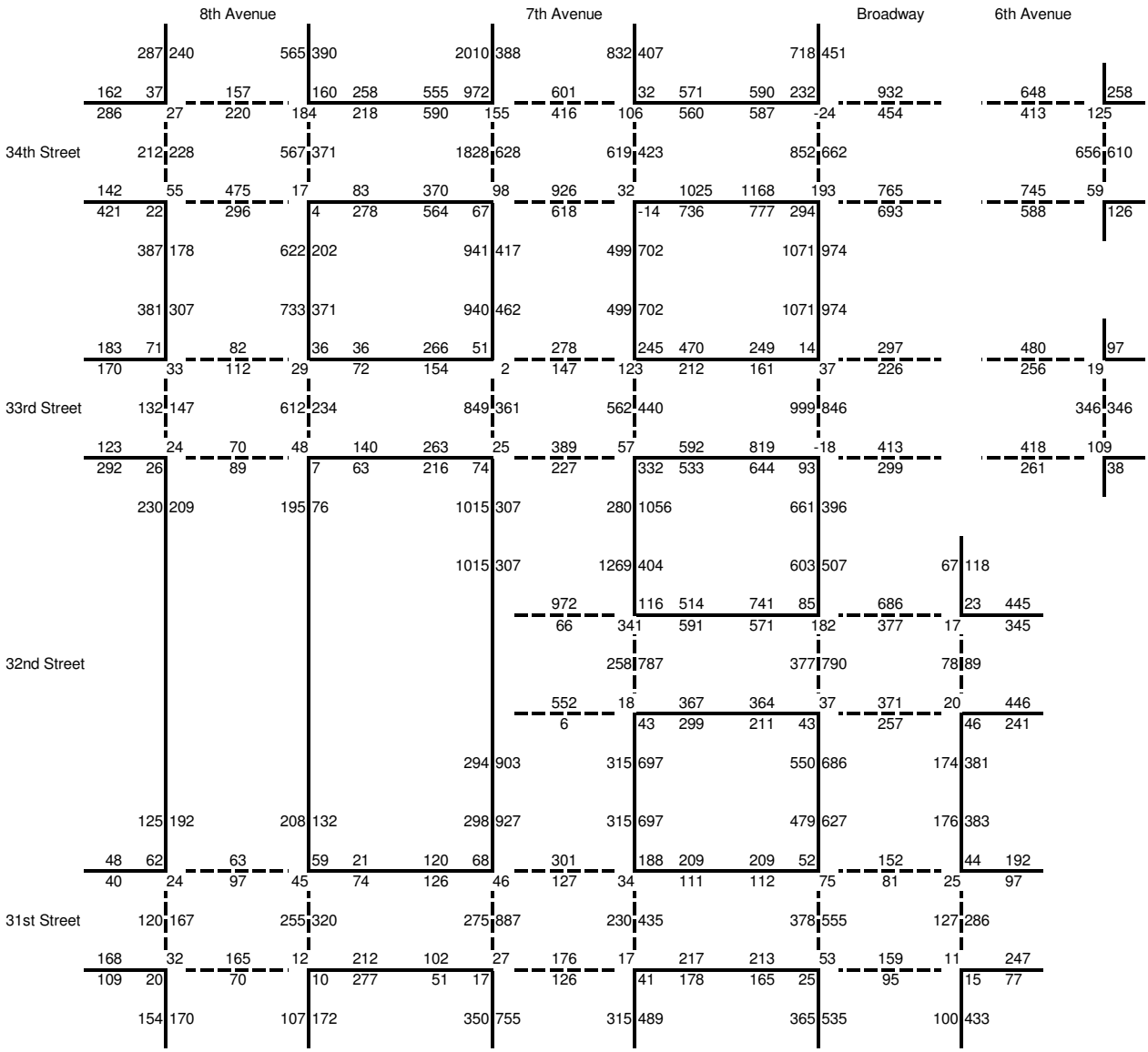

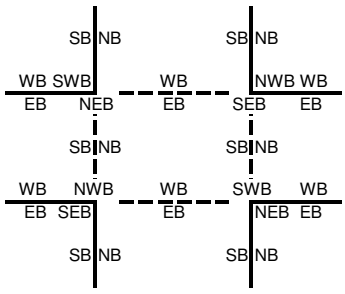

2014 Future with the Proposed Project - Single-Tenant Office Scenario - Pedestrian Volume
SAT Peak 15 Minutes

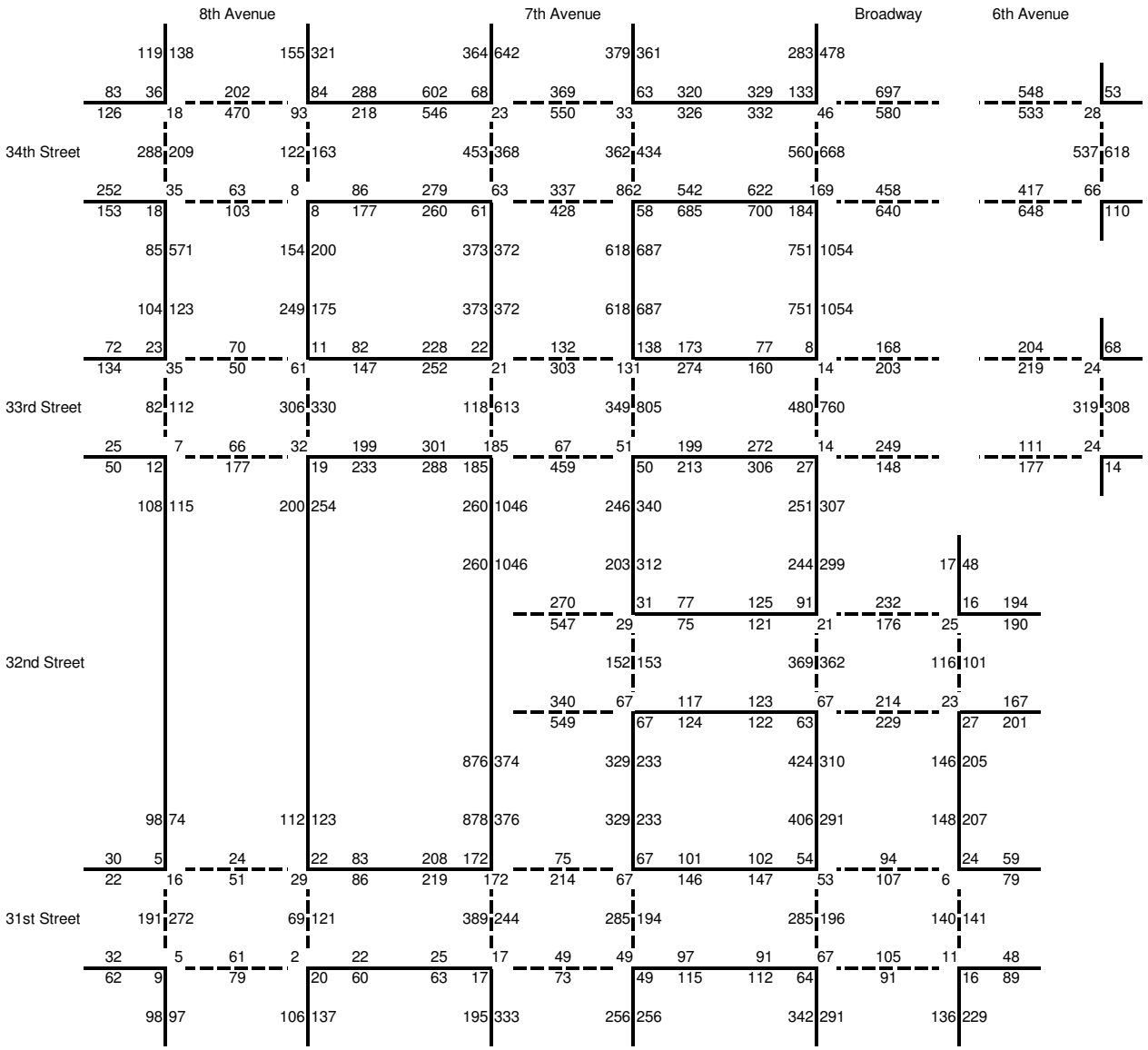

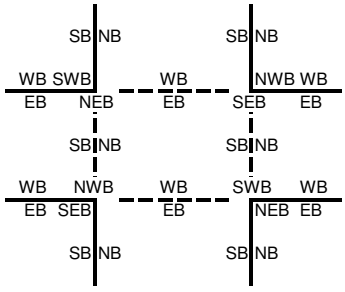

2014 Future with the Proposed Project - Multi-Tenant Office Scenario - Pedestrian Volume
AM Peak 15 Minutes

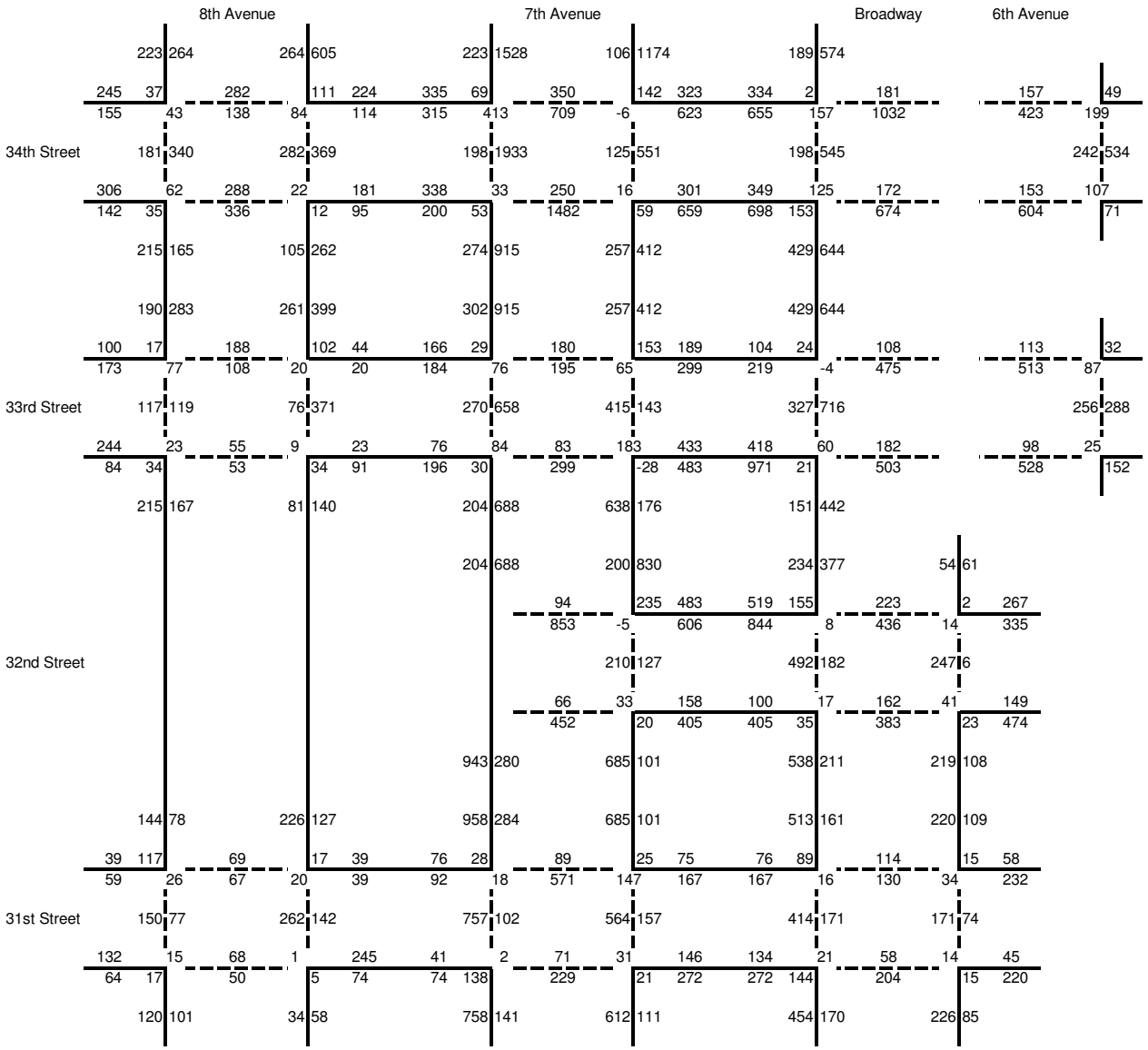

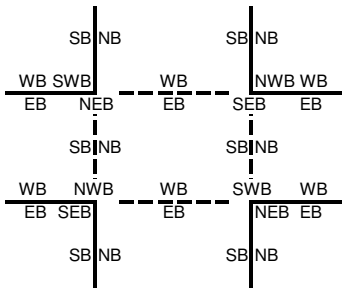

2014 Future with the Proposed Project - Multi-Tenant Office Scenario - Pedestrian Volume
MD Peak 15 Minutes

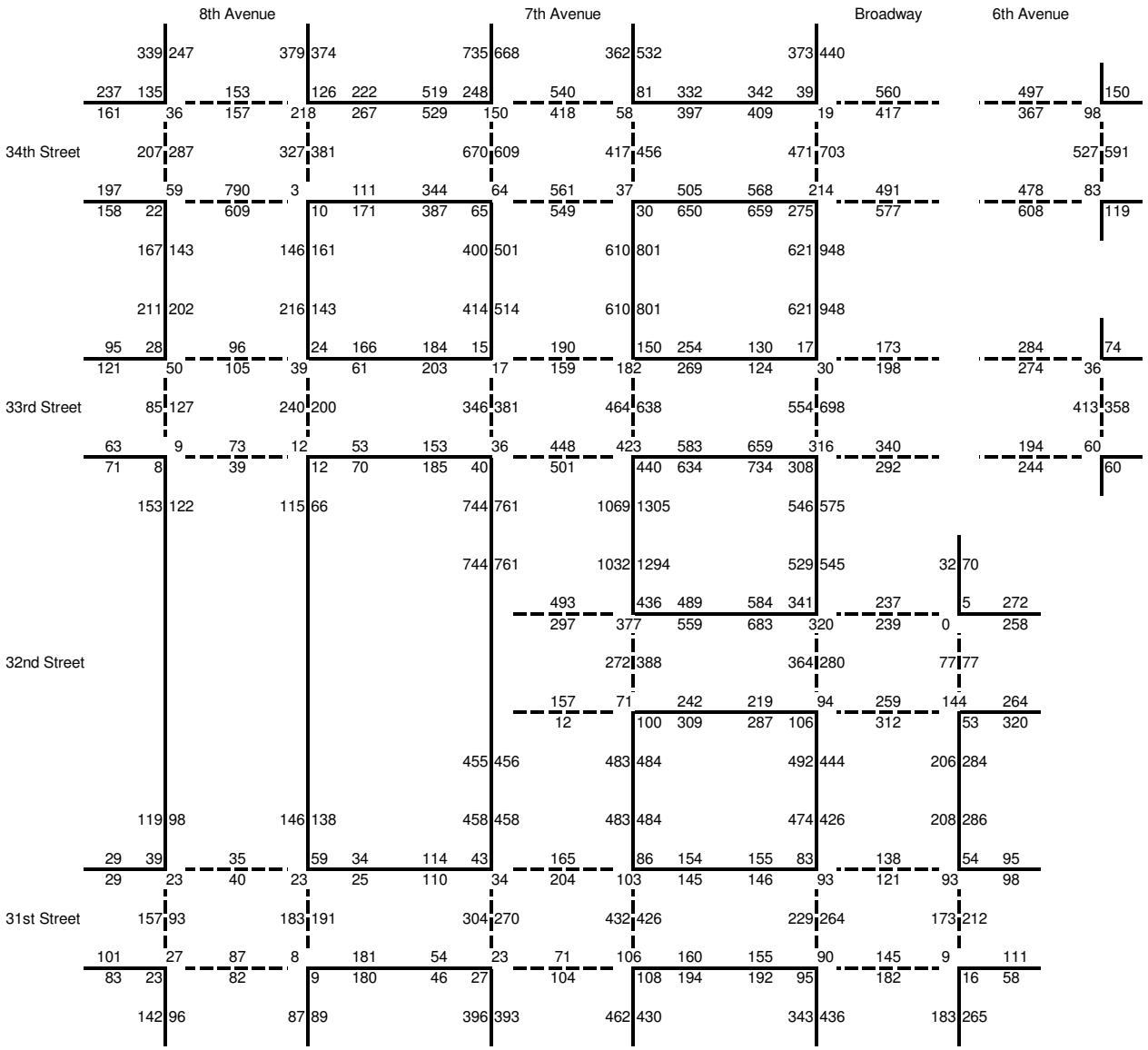

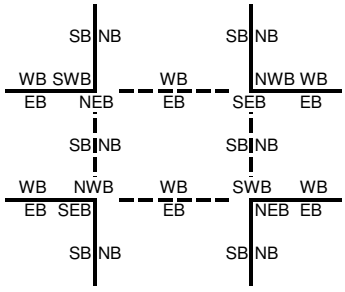

2014 Future with the Proposed Project - Multi-Tenant Office Scenario - Pedestrian Volume
PM Peak 15 Minutes

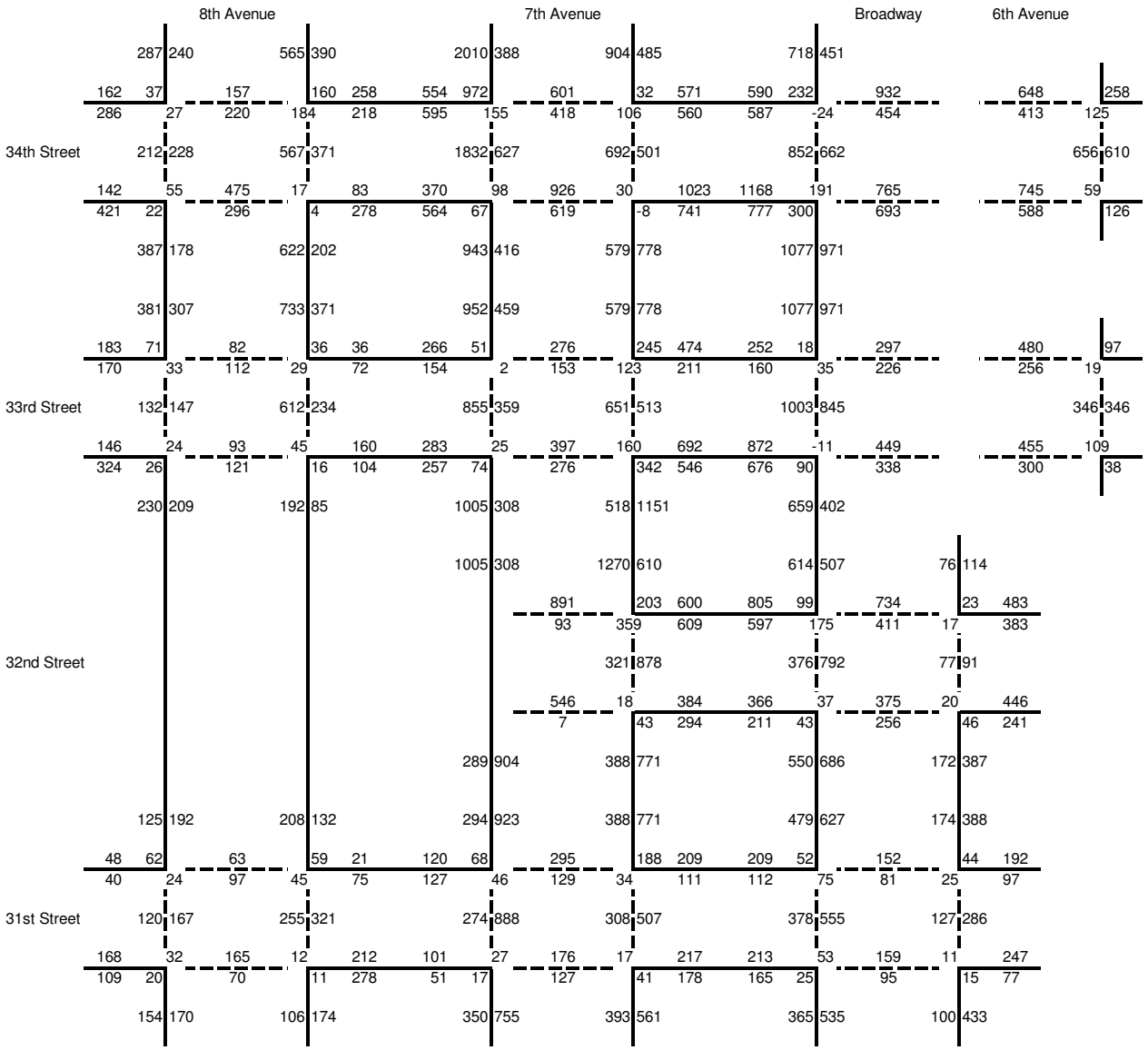

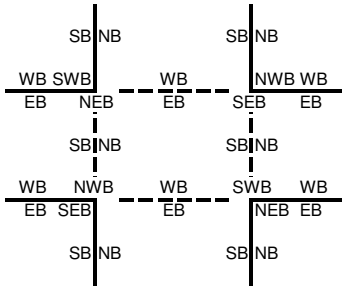

2014 Future with the Proposed Project - Multi-Tenant Office Scenario - Pedestrian Volume
SAT Peak 15 Minutes

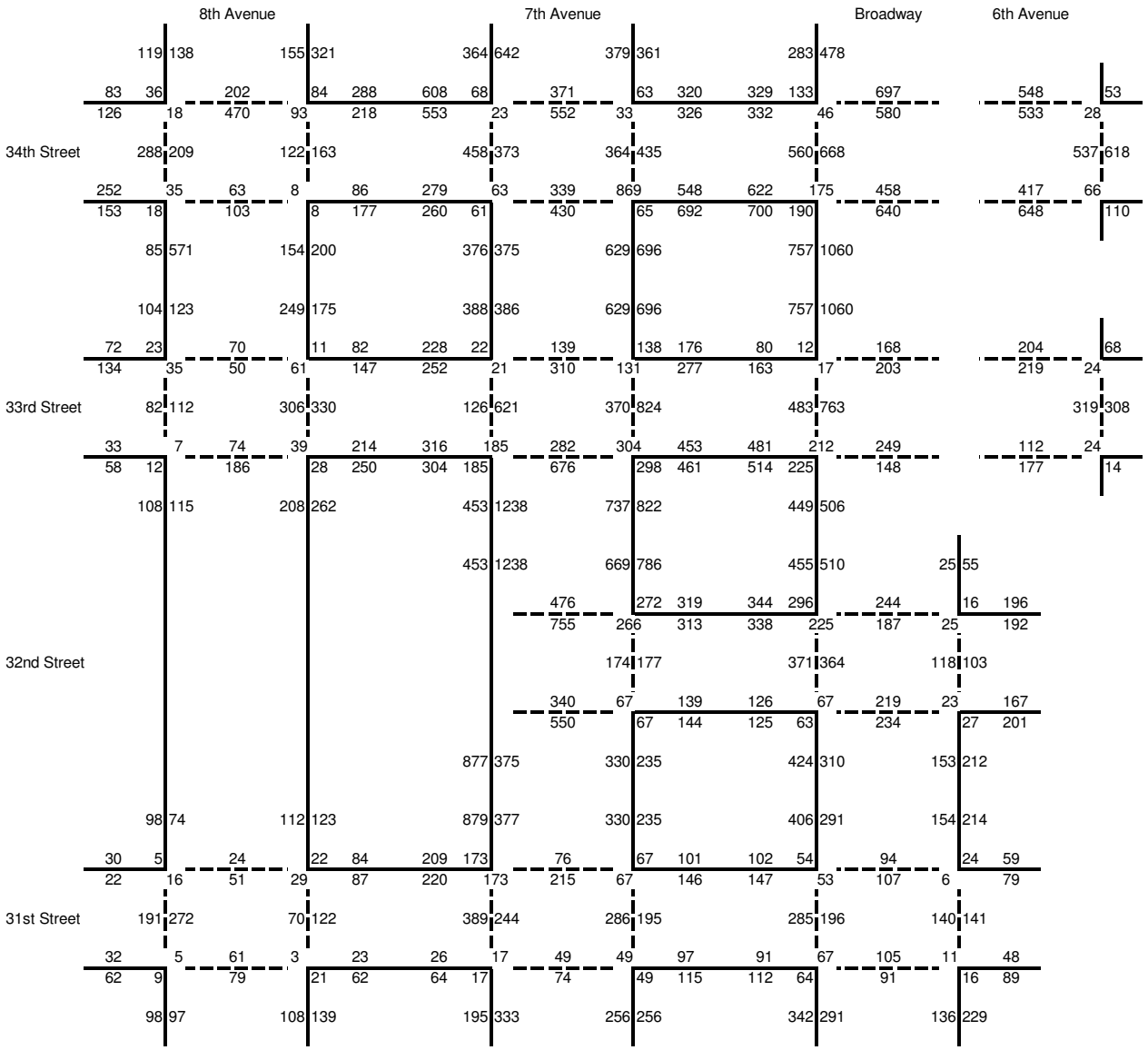

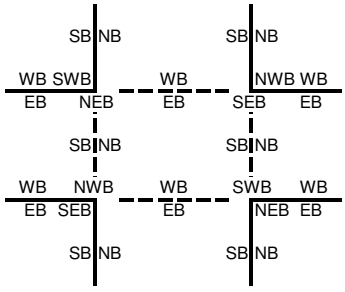

2008 Existing - Pedestrian LOS Analysis

Location				AM			MD			PM			SAT		
				Peak 15 Volume	PFM / SFP	LOS	Peak 15 Volume	PFM / SFP	LOS	Peak 15 Volume	PFM / SFP	LOS	Peak 15 Volume	PFM / SFP	LOS
8th Avenue & 31st Street	Sidewalk	West	South	162	1.5	B	161	1.5	B	231	2.1	B	69	0.6	B
			North	69	0.8	B	40	0.5	A	47	0.6	B	30	0.4	A
		North	West	158	1.5	B	200	1.9	B	216	2.1	B	155	1.5	B
			East	296	1.0	B	254	0.9	B	243	0.8	B	203	0.7	B
		East	North	56	0.2	A	35	0.1	A	58	0.2	A	148	0.5	A
			South	295	3.0	C	342	3.5	C	455	4.7	C	74	0.8	B
		South	East	54	0.5	B	154	1.5	B	196	1.9	B	225	2.2	B
			West	161	1.5	B	223	2.1	B	229	2.2	B	182	1.7	B
	Corner	Northwest		395	46.9	B	338	54.0	B	374	50.1	B	498	35.3	C
		Northeast		480	174.7	A	468	183.2	A	678	125.3	A	256	343.6	A
		Southeast		440	36.4	C	501	29.3	C	684	17.4	D	301	54.2	B
		Southwest		281	37.1	C	426	21.0	D	431	20.2	D	567	10.7	E
	Crosswalk	West		160	64.9	A	229	45.9	B	184	51.7	B	434	20.9	D
		North		100	143.0	A	52	268.2	A	110	130.2	A	46	302.3	A
		East		346	39.5	C	339	38.5	C	471	26.0	C	162	84.9	A
		South		91	160.8	A	148	97.7	A	197	71.5	A	118	124.3	A
8th Avenue & 33rd Street	Sidewalk	West	South	275	3.5	C	71	0.9	B	344	4.4	C	33	0.4	A
			North	225	2.8	B	143	1.8	B	280	3.5	C	159	2.0	B
		North	West	395	4.9	C	374	4.6	C	570	7.0	D	201	2.5	B
			East	592	3.8	C	334	2.1	B	978	6.2	D	392	2.5	B
		East	North	36	0.2	A	194	1.1	B	60	0.3	A	195	1.1	B
			South	53	0.2	A	82	0.3	A	114	0.4	A	407	1.5	B
		South	East	140	1.2	B	139	1.2	B	132	1.1	B	417	3.5	C
			West	312	3.1	C	256	2.5	B	335	3.3	C	205	2.0	B
	Corner	Northwest		519	31.6	C	411	40.7	B	424	38.7	C	317	54.7	B
		Northeast		757	96.9	A	648	108.8	A	926	69.2	A	764	91.0	A
		Southeast		466	95.2	A	513	92.0	A	848	56.1	B	883	50.3	B
		Southwest		290	58.6	B	273	60.0	A	330	48.0	B	409	36.1	C
	Crosswalk	West		171	55.0	B	179	50.8	B	181	44.5	B	172	55.4	B
		North		261	68.6	A	179	99.9	A	147	121.4	A	101	178.0	A
		East		383	29.3	C	419	29.5	C	729	16.9	D	606	18.6	D
		South		73	303.8	A	87	253.6	A	113	197.4	A	228	96.5	A
8th Avenue & 34th Street	Sidewalk	West	South	408	3.9	C	318	3.1	C	515	5.0	C	377	3.6	C
			North	377	1.9	B	378	1.9	B	420	2.1	B	189	1.0	B
		North	West	387	3.9	C	552	5.6	C	384	3.9	C	231	2.3	B
			East	781	7.3	D	708	6.6	D	814	7.6	D	436	4.1	C
		East	North	311	2.1	B	460	3.1	C	437	2.9	B	475	3.2	C
			South	174	1.2	B	251	1.7	B	236	1.6	B	234	1.6	B
		South	East	307	2.1	B	284	1.9	B	706	4.8	C	324	2.2	B
			West	305	3.7	C	274	3.3	C	450	5.5	C	617	7.5	D
	Corner	Northwest		893	46.0	B	920	43.0	B	713	55.7	B	1154	28.2	C
		Northeast		1130	32.5	C	1277	29.5	C	1451	23.3	D	1048	39.5	C
		Southeast		1165	74.0	A	2024	37.6	C	1515	54.5	B	416	224.1	A
		Southwest		1092	24.5	C	1873	12.0	E	1090	28.1	C	659	49.7	B
	Crosswalk	West		430	25.0	C	469	22.2	D	315	34.1	C	469	21.2	D
		North		386	63.4	A	286	85.0	A	336	70.9	A	634	34.3	C
		East		565	25.2	C	665	20.9	D	794	17.9	D	249	61.7	A
		South		568	45.5	B	1347	16.5	D	701	34.6	C	150	182.4	A

Location				AM			MD			PM			SAT		
				Peak 15 Volume	PFM / SFP	LOS	Peak 15 Volume	PFM / SFP	LOS	Peak 15 Volume	PFM / SFP	LOS	Peak 15 Volume	PFM / SFP	LOS
7th Avenue & 31st Street	Sidewalk	West	South	88	0.9	B	90	0.9	B	109	1.1	B	83	0.8	B
			North	145	0.5	A	202	0.6	B	210	0.7	B	403	1.3	B
		North	West	1150	3.8	C	866	2.8	B	1108	3.6	C	1202	3.9	C
			East	761	2.4	B	833	2.6	B	985	3.1	C	474	1.5	B
		East	North	222	1.3	B	185	1.1	B	290	1.8	B	169	1.0	B
			South	380	2.3	B	195	1.2	B	346	2.1	B	101	0.6	B
		South	East	736	2.8	B	731	2.7	B	840	3.1	C	406	1.5	B
			West	863	4.9	C	750	4.3	C	1057	6.0	D	501	2.9	B
	Corner	Northwest		1459	53.7	B	958	96.0	A	1559	60.4	A	1206	74.9	A
		Northeast		1488	24.9	C	1251	30.5	C	1250	31.6	C	788	53.5	B
		Southeast		1041	31.9	C	1056	27.4	C	1002	26.3	C	570	57.9	B
		Southwest		1220	18.5	D	747	29.3	C	1402	8.5	E	743	30.7	C
	Crosswalk	West		812	14.7	E	541	25.0	C	1094	12.3	E	603	22.9	D
		North		607	17.4	D	344	35.6	C	361	35.3	C	270	45.2	B
		East		718	20.2	D	822	14.8	E	681	17.2	D	452	31.2	C
		South		273	40.5	B	158	70.1	A	266	39.1	C	108	103.8	A
7th Avenue & 32nd Street	Sidewalk	North	West	1336	4.5	C	1168	3.9	C	1754	5.8	C	1532	5.1	C
			East	663	2.1	B	1004	3.2	C	1042	3.3	C	650	2.1	B
		East	North	1291	11.8	E	663	6.1	D	1181	10.8	D	275	2.5	B
			South	595	5.8	C	505	5.0	C	672	6.6	D	226	2.2	B
		South	East	761	2.0	B	833	2.1	B	985	2.5	B	474	1.2	B
			West	1150	4.3	C	866	3.2	C	1108	4.1	C	1202	4.5	C
	Corner	Northeast		1535	23.7	D	1208	28.1	C	2160	9.0	E	1372	23.6	D
		Southeast		1156	40.0	B	1126	36.8	C	1829	14.8	E	1334	28.0	C
	Crosswalk	North		1087	5.1	F	384	19.6	D	932	7.8	F	941	6.5	F
		East		381	65.4	A	684	32.1	C	1019	18.2	D	323	75.4	A
		South		725	11.1	E	370	20.8	D	754	8.8	E	941	7.5	F
7th Avenue & 33rd Street	Sidewalk	West	South	206	0.8	B	290	1.1	B	382	1.4	B	559	2.1	B
			North	284	1.8	B	361	2.3	B	348	2.3	B	421	2.7	B
		North	West	1243	5.3	C	904	3.9	C	1413	6.0	D	750	3.2	C
			East	759	3.9	C	1297	6.7	D	1269	6.5	D	1227	6.3	D
		East	North	478	5.1	C	399	4.2	C	595	6.3	D	381	4.0	C
			South	953	6.1	D	518	3.3	C	945	6.1	D	351	2.3	B
		South	East	663	2.0	B	1004	3.0	B	1042	3.1	C	650	1.9	B
			West	1336	2.7	B	1168	2.4	B	1754	3.6	C	1532	3.1	C
	Corner	Northwest		1568	64.3	A	1188	85.9	A	1844	52.6	B	1283	77.0	A
		Northeast		1202	6.6	F	1611	4.3	F	1746	2.1	F	1721	5.7	F
		Southeast		1226	31.9	C	1641	21.6	D	1918	17.2	D	1830	20.0	D
		Southwest		1659	66.2	A	1288	90.7	A	2102	53.9	B	1747	61.3	A
	Crosswalk	West		1064	22.4	D	818	26.9	C	1371	12.4	E	812	29.9	C
		North		391	13.7	E	330	17.1	D	407	13.6	E	420	12.1	E
		East		680	33.1	C	1091	18.2	D	1105	19.7	D	1132	16.5	D
		South		486	14.0	E	396	16.7	D	636	9.7	E	577	12.0	E
7th Avenue & 34th Street	Sidewalk	West	South	423	2.0	B	687	3.3	C	786	3.8	C	503	2.4	B
			North	597	2.5	B	987	4.1	C	1060	4.4	C	1097	4.5	C
		North	West	1669	7.8	D	1322	6.2	D	2282	10.6	D	937	4.4	C
			East	1327	5.6	C	913	3.9	C	1328	5.6	C	767	3.2	C
		East	North	1135	5.7	C	871	4.4	C	1351	6.8	D	770	3.9	C
			South	1140	4.4	C	1378	5.3	C	2097	8.1	D	1483	5.7	C
		South	East	759	3.5	C	1297	6.0	D	1269	5.9	C	1227	5.7	C
			West	1243	5.2	C	904	3.8	C	1413	6.0	C	750	3.2	C
	Corner	Northwest		3599	10.1	E	2545	14.1	E	4478	4.2	F	1775	20.4	D
		Northeast		2030	22.9	D	2025	19.1	D	2406	13.7	E	1879	22.7	D
		Southeast		2679	13.9	E	2126	15.7	D	2920	8.7	E	2589	14.8	E
		Southwest		3885	13.1	E	2449	36.7	C	4094	21.4	D	1680	56.9	B
	Crosswalk	West		2066	17.5	D	1203	26.9	C	2352	10.9	E	765	44.5	B
		North		1068	16.1	D	956	19.7	D	1034	18.2	D	922	19.6	D
		East		784	25.6	C	873	24.4	C	1173	18.1	D	809	26.6	C
		South		1738	10.9	E	1119	15.2	D	1593	9.5	E	797	23.0	D

Location				AM			MD			PM			SAT		
				Peak 15 Volume	PFM / SFP	LOS	Peak 15 Volume	PFM / SFP	LOS	Peak 15 Volume	PFM / SFP	LOS	Peak 15 Volume	PFM / SFP	LOS
6th Avenue & 31st Street	Sidewalk	West	South	380	3.6	C	195	1.9	B	346	3.3	C	101	1.0	B
			North	222	2.6	B	185	2.1	B	290	3.4	C	169	2.0	B
		North	West	515	3.4	C	616	4.0	C	798	5.2	C	493	3.2	C
			East	287	1.3	B	340	1.5	B	488	2.2	B	261	1.2	B
		East	North	282	3.0	C	187	2.0	B	280	3.0	C	134	1.5	B
			South	251	1.6	B	164	1.1	B	302	2.0	B	132	0.9	B
		South	East	296	1.8	B	294	1.7	B	507	3.0	C	261	1.5	B
			West	451	3.8	C	396	3.3	C	575	4.8	C	352	2.9	B
	Corner	Northwest		752	21.2	D	618	32.1	C	953	20.2	D	561	33.5	C
		Northeast		506	32.1	C	644	26.1	C	661	25.0	C	413	43.0	B
		Southeast		498	34.5	C	555	26.5	C	631	19.2	D	379	42.5	B
		Southwest		822	25.0	C	613	32.1	C	918	18.2	D	521	42.0	B
	Crosswalk	West		425	23.7	D	398	27.6	C	624	17.9	D	395	27.6	C
		North		231	52.6	B	147	85.1	A	216	59.1	B	126	96.9	A
		East		227	51.7	B	355	29.3	C	378	25.8	C	258	42.9	B
		South		243	57.6	B	176	79.1	A	228	58.6	B	95	147.6	A
6th Avenue & 32nd Street	Sidewalk	West	South	595	3.6	C	505	3.1	C	672	4.1	C	226	1.4	B
			North	1291	12.3	E	663	6.3	D	1181	11.2	E	275	2.6	B
		North	West	600	3.6	C	710	4.3	C	1040	6.3	D	773	4.7	C
			East	62	2.7	B	70	3.1	C	107	4.8	C	46	2.1	B
		East	North	581	4.5	C	504	3.9	C	773	5.9	C	367	2.8	B
			South	571	5.4	C	532	5.0	C	603	5.7	C	329	3.1	C
		South	East	287	2.0	B	340	2.3	B	488	3.4	C	261	1.8	B
			West	515	3.9	C	616	4.7	C	798	6.0	D	493	3.7	C
	Corner	Northwest		1386	5.3	F	1210	11.1	E	2189	6.5	F	1247	12.1	E
		Northeast		995	8.0	F	713	13.3	E	1318	0.1	F	683	13.6	E
		Southeast		863	23.4	D	825	21.8	D	827	18.2	D	625	29.4	C
		Southwest		1150	11.8	E	1190	11.2	E	1576	4.7	F	1102	12.4	E
	Crosswalk	West		577	21.2	D	621	20.9	D	925	15.0	E	672	19.4	D
		North		707	15.1	D	530	22.0	D	1093	10.2	E	426	28.5	C
		East		273	58.0	B	178	84.6	A	187	80.1	A	217	68.8	A
		South		533	20.8	D	475	22.5	D	589	16.7	D	372	29.3	C
6th Avenue & 33rd Street	Sidewalk	West	South	953	9.1	D	518	4.9	C	945	9.0	D	351	3.3	C
			North	478	4.4	C	399	3.7	C	595	5.5	C	381	3.5	C
		North	West	893	5.6	C	1541	9.7	D	1724	10.9	D	1786	11.3	E
		South	West	600	3.6	C	710	4.3	C	1040	6.3	D	773	4.7	C
	Corner	Northwest		1387	24.4	C	1643	19.9	D	2034	14.0	E	1620	20.7	D
		Southwest		1397	5.4	F	1793	3.9	F	2115	2.9	F	1600	5.4	F
	Crosswalk	West		754	16.9	D	1212	8.8	E	1457	6.5	F	1210	9.0	E
		North		524	23.8	D	332	40.7	B	446	30.2	C	332	40.7	B
		South		569	21.5	D	533	21.7	D	586	19.3	D	303	39.4	C
Broadway & 34th Street	Sidewalk	West	South	1140	5.5	C	1378	6.7	D	2097	10.2	D	1483	7.2	D
			North	1135	5.7	C	871	4.4	C	1351	6.8	D	770	3.9	C
		North	West	706	3.4	C	853	4.2	C	1021	5.0	C	805	3.9	C
		South	West	893	4.6	C	1541	7.9	D	1724	8.8	D	1786	9.2	D
	Corner	Northwest		2108	25.3	C	2288	20.7	D	3021	12.9	E	2744	15.9	D
		Southwest		1760	27.6	C	2783	15.1	D	3277	13.7	E	2753	15.4	D
	Crosswalk	West		672	36.9	C	1218	17.2	D	1352	13.8	E	1272	15.8	D
		North		1232	17.7	D	979	26.2	C	1409	17.9	D	1268	19.4	D
		South		809	31.2	C	1030	21.7	D	1408	14.5	E	1064	21.3	D
Broadway & 33rd Street	Corner	Northeast		1136	14.5	E	1320	7.9	F	1346	6.2	F	1031	13.3	E
		Southeast		1139	12.3	E	1160	8.9	E	1280	4.9	F	795	16.2	D
	Crosswalk	North		563	16.3	D	512	20.7	D	647	16.9	D	381	29.0	C
		East		458	30.4	C	701	18.6	D	587	22.6	D	562	24.0	D
		South		510	32.0	C	343	45.1	B	551	24.9	C	197	82.3	A
6th Avenue & 34th Street	Corner	Northeast		1522	31.0	C	2143	16.5	D	2593	11.6	E	2226	15.2	D
		Southeast		1554	25.4	C	2268	13.2	E	2582	8.8	E	2263	13.8	E
	Crosswalk	North		621	14.4	E	874	10.7	E	1101	8.2	E	1082	8.0	F
		East		661	26.1	C	1029	16.1	D	1120	14.9	E	1066	15.4	D
		South		723	13.5	E	1047	7.6	F	1287	5.4	F	1031	8.0	E

2014 No Action - Pedestrian LOS Analysis

Location				AM			MD			PM			SAT		
				Peak 15 Volume	PFM / SFP	LOS	Peak 15 Volume	PFM / SFP	LOS	Peak 15 Volume	PFM / SFP	LOS	Peak 15 Volume	PFM / SFP	LOS
8th Avenue & 31st Street	Sidewalk	West	South	196	1.8	B	184	1.7	B	277	2.6	B	94	0.9	B
			North	97	1.2	B	58	0.7	B	88	1.0	B	52	0.6	B
		North	West	222	2.1	B	217	2.1	B	316	3.0	C	171	1.6	B
			East	351	1.2	B	283	1.0	B	339	1.2	B	235	0.8	B
		East	North	76	0.2	A	57	0.2	A	92	0.3	A	169	0.5	B
			South	317	3.3	C	360	3.7	C	487	5.0	C	82	0.8	B
		South	East	88	0.9	B	171	1.6	B	274	2.6	B	243	2.3	B
			West	220	2.1	B	237	2.2	B	323	3.0	C	195	1.8	B
	Corner	Northwest		505	34.7	C	386	46.3	B	533	32.9	C	559	30.6	C
		Northeast		573	145.1	A	527	161.6	A	834	100.1	A	316	276.4	A
		Southeast		524	29.4	C	554	25.7	C	825	12.9	E	352	45.1	B
		Southwest		375	25.3	C	468	18.5	D	573	13.2	E	617	9.0	E
	Crosswalk	West		227	44.5	B	250	40.2	B	286	31.8	C	463	19.4	D
		North		135	102.5	A	75	180.4	A	160	85.6	A	75	179.0	A
		East		401	33.4	C	371	34.9	C	571	20.8	D	189	71.7	A
		South		117	124.2	A	168	85.9	A	235	59.3	B	140	104.5	A
8th Avenue & 33rd Street	Sidewalk	West	South	322	4.1	C	120	1.5	B	396	5.1	C	75	1.0	B
			North	269	3.4	C	211	2.7	B	347	4.4	C	202	2.5	B
		North	West	471	5.8	C	410	5.1	C	683	8.4	D	221	2.7	B
			East	653	4.2	C	348	2.2	B	1089	6.9	D	407	2.6	B
		East	North	56	0.3	A	211	1.2	B	89	0.5	B	210	1.2	B
			South	94	0.3	A	91	0.3	A	154	0.6	B	424	1.5	B
		South	East	211	1.8	B	166	1.4	B	247	2.1	B	454	3.8	C
			West	381	3.8	C	274	2.7	B	439	4.4	C	223	2.2	B
	Corner	Northwest		619	25.1	C	484	33.6	C	566	26.7	C	361	47.3	B
		Northeast		854	85.2	A	686	102.4	A	1079	57.5	B	801	86.4	A
		Southeast		578	74.7	A	544	86.3	A	1011	46.0	B	922	47.8	B
		Southwest		390	40.9	B	323	49.3	B	465	31.7	C	452	31.9	C
	Crosswalk	West		234	37.2	C	211	42.5	B	277	26.3	C	192	49.2	B
		North		291	61.1	A	195	89.8	A	185	94.4	A	112	160.4	A
		East		446	24.4	C	438	28.0	C	843	14.2	E	630	17.8	D
		South		99	222.3	A	96	228.0	A	138	161.0	A	241	91.3	A
8th Avenue & 34th Street	Sidewalk	West	South	446	4.3	C	353	3.4	C	561	5.4	C	402	3.9	C
			North	390	2.0	B	390	2.0	B	434	2.2	B	196	1.0	B
		North	West	482	4.9	C	578	5.8	C	516	5.2	C	246	2.5	B
			East	860	8.1	D	738	6.9	D	935	8.8	D	458	4.3	C
		East	North	332	2.2	B	481	3.2	C	466	3.1	C	498	3.3	C
			South	266	1.8	B	270	1.9	B	345	2.4	B	249	1.7	B
		South	East	360	2.4	B	296	2.0	B	809	5.5	C	337	2.3	B
			West	378	4.6	C	307	3.7	C	560	6.8	D	650	7.9	D
	Corner	Northwest		1006	40.0	C	957	41.0	B	857	44.4	B	1198	26.8	C
		Northeast		1243	28.9	C	1330	28.0	C	1619	19.6	D	1096	37.5	C
		Southeast		1292	65.3	A	2096	36.0	C	1699	47.9	B	437	212.8	A
		Southwest		1231	20.6	D	1960	11.2	E	1268	22.6	D	696	46.7	B
	Crosswalk	West		515	20.5	D	486	21.3	D	430	23.3	D	486	19.7	D
		North		411	59.3	B	300	80.9	A	363	64.3	A	659	32.8	C
		East		639	21.7	D	690	20.0	D	915	15.2	D	262	58.4	B
		South		619	41.2	B	1393	15.9	D	762	31.7	C	158	173.5	A

Location				AM			MD			PM			SAT		
				Peak 15 Volume	PFM / SFP	LOS	Peak 15 Volume	PFM / SFP	LOS	Peak 15 Volume	PFM / SFP	LOS	Peak 15 Volume	PFM / SFP	LOS
7th Avenue & 31st Street	Sidewalk	West	South	114	1.2	B	98	1.0	B	150	1.5	B	88	0.9	B
			North	166	0.5	B	222	0.7	B	243	0.8	B	426	1.3	B
		North	West	1225	4.0	C	908	3.0	B	1195	3.9	C	1252	4.1	C
			East	791	2.5	B	964	3.0	C	1014	3.2	C	557	1.7	B
		East	North	242	1.5	B	299	1.8	B	320	1.9	B	247	1.5	B
			South	409	2.5	B	347	2.1	B	386	2.4	B	204	1.2	B
		South	East	738	2.8	B	896	3.4	C	822	3.1	C	514	1.9	B
			West	898	5.1	C	787	4.5	C	1104	6.3	D	528	3.0	C
	Corner	Northwest		1556	49.7	B	1015	90.0	A	1686	55.4	B	1266	71.0	A
		Northeast		1558	23.7	D	1413	26.7	C	1315	29.3	C	898	46.5	B
		Southeast		1082	30.4	C	1245	23.0	D	1036	25.4	C	695	47.1	B
		Southwest		1296	16.9	D	796	27.0	C	1505	7.4	F	787	28.6	C
	Crosswalk	West		855	13.3	E	571	23.5	D	1157	10.9	E	631	20.9	D
		North		657	15.8	D	369	33.0	C	418	30.2	C	290	41.8	B
		East		729	19.7	D	855	14.0	E	675	17.6	D	473	29.6	C
		South		301	36.5	C	175	62.7	A	304	33.6	C	122	91.3	A
7th Avenue & 32nd Street	Sidewalk	North	West	1410	4.7	C	1456	4.9	C	1847	6.2	D	1587	5.3	C
			East	1076	3.5	C	1552	5.0	C	1495	4.8	C	660	2.1	B
		East	North	1516	13.8	E	954	8.7	D	1413	12.9	E	300	2.7	B
			South	676	6.6	D	640	6.3	D	773	7.6	D	302	3.0	B
		South	East	791	2.0	B	964	2.5	B	1014	2.6	B	557	1.4	B
			West	1211	4.5	C	904	3.3	C	1178	4.4	C	1248	4.6	C
	Corner	Northeast		1992	18.1	D	1774	16.6	D	2669	4.2	F	1415	22.6	D
		Southeast		1287	35.3	C	1289	31.8	C	1995	12.9	E	1448	25.5	C
	Crosswalk	North		1305	3.9	F	655	10.8	E	1176	6.1	F	976	6.2	F
		East		458	52.1	B	725	30.0	C	1119	16.7	D	334	72.8	A
		South		773	10.3	E	390	19.6	D	811	8.0	E	978	7.2	F
7th Avenue & 33rd Street	Sidewalk	West	South	252	0.9	B	306	1.1	B	430	1.6	B	580	2.2	B
			North	335	2.2	B	366	2.4	B	393	2.6	B	444	2.9	B
		North	West	1315	5.6	C	943	4.0	C	1494	6.4	D	776	3.3	C
			East	775	4.0	C	1344	6.9	D	1278	6.6	D	1266	6.5	D
		East	North	506	5.4	C	412	4.4	C	632	6.7	D	393	4.2	C
			South	1058	6.8	D	781	5.0	C	1038	6.7	D	362	2.3	B
		South	East	854	2.8	B	1530	5.0	C	1193	3.9	C	669	2.2	B
			West	1410	2.9	B	1456	3.0	B	1847	3.8	C	1587	3.3	C
	Corner	Northwest		1690	58.7	B	1227	83.0	A	1969	49.1	B	1325	74.3	A
		Northeast		1300	5.6	F	1667	4.0	F	1831	1.4	F	1776	5.4	F
		Southeast		1442	27.2	C	2190	14.2	E	2105	14.0	E	1887	19.2	D
		Southwest		1836	58.0	B	1579	71.3	A	2280	49.7	B	1806	59.0	B
	Crosswalk	West		1135	19.6	D	845	25.9	C	1447	11.3	E	838	28.2	C
		North		438	11.9	E	341	16.6	D	453	12.2	E	434	11.6	E
		East		727	31.1	C	1130	17.4	D	1136	18.7	D	1168	15.9	D
		South		583	11.7	E	656	9.4	E	730	8.0	E	596	11.6	E
7th Avenue & 34th Street	Sidewalk	West	South	529	2.6	B	718	3.5	C	918	4.4	C	525	2.5	B
			North	640	2.6	B	1030	4.2	C	1122	4.6	C	1140	4.7	C
		North	West	1731	8.1	D	1368	6.4	D	2366	11.0	E	971	4.5	C
			East	1351	5.7	C	947	4.0	C	1329	5.6	C	795	3.4	C
		East	North	1180	5.9	C	907	4.5	C	1408	7.1	D	802	4.0	C
			South	1190	4.6	C	1426	5.5	C	2179	8.4	D	1530	5.9	C
		South	East	775	3.6	C	1344	6.3	D	1278	6.0	C	1266	5.9	C
			West	1295	5.5	C	936	3.9	C	1472	6.2	D	775	3.3	C
	Corner	Northwest		3739	9.5	E	2636	13.3	E	4653	3.8	F	1837	19.3	D
		Northeast		2090	22.1	D	2102	18.1	D	2459	13.3	E	1948	21.6	D
		Southeast		2759	13.4	E	2201	14.9	E	2987	8.2	E	2671	14.1	E
		Southwest		4030	12.2	E	2533	35.2	C	4250	20.4	D	1735	54.8	B
	Crosswalk	West		2147	16.8	D	1245	25.9	C	2445	10.4	E	790	42.9	B
		North		1111	15.3	D	993	18.9	D	1080	17.3	D	956	18.8	D
		East		789	25.4	C	902	23.5	D	1166	18.2	D	835	25.6	C
		South		1798	10.5	E	1156	14.7	E	1649	9.1	E	823	22.2	D

Location				AM			MD			PM			SAT		
				Peak 15 Volume	PFM / SFP	LOS	Peak 15 Volume	PFM / SFP	LOS	Peak 15 Volume	PFM / SFP	LOS	Peak 15 Volume	PFM / SFP	LOS
6th Avenue & 31st Street	Sidewalk	West	South	405	3.9	C	347	3.3	C	378	3.6	C	204	1.9	B
			North	243	2.8	B	300	3.5	C	322	3.7	C	249	2.9	B
		North	West	674	4.4	C	900	5.9	C	1107	7.3	D	697	4.6	C
			East	324	1.5	B	483	2.2	B	546	2.5	B	355	1.6	B
		East	North	290	3.1	C	193	2.1	B	288	3.1	C	138	1.5	B
			South	265	1.7	B	169	1.1	B	324	2.1	B	137	0.9	B
		South	East	311	1.8	B	448	2.7	B	533	3.2	C	365	2.2	B
			West	624	5.2	C	779	6.5	D	900	7.5	D	633	5.3	C
	Corner	Northwest		934	15.8	D	928	19.5	D	1293	12.6	E	788	22.0	D
		Northeast		538	29.7	C	791	19.6	D	714	22.5	D	512	33.0	C
		Southeast		536	31.6	C	737	17.7	D	693	16.7	D	504	29.7	C
		Southwest		1013	18.4	D	1004	17.5	D	1265	11.2	E	807	25.1	C
	Crosswalk	West		585	15.9	D	492	21.5	D	933	10.2	E	481	21.2	D
		North		244	49.8	B	259	46.9	B	233	53.4	B	201	59.8	B
		East		246	47.3	B	385	26.6	C	412	23.3	D	281	38.9	C
		South		263	53.3	B	327	40.9	B	255	52.1	B	196	69.5	A
6th Avenue & 32nd Street	Sidewalk	West	South	631	3.8	C	627	3.8	C	718	4.3	C	304	1.8	B
			North	1463	13.9	E	949	9.0	D	1355	12.9	E	298	2.8	B
		North	West	850	5.1	C	1027	6.2	D	1441	8.7	D	840	5.1	C
			East	106	4.7	C	89	4.0	C	162	7.2	D	64	2.9	B
		East	North	601	4.6	C	524	4.0	C	788	6.1	D	382	2.9	B
			South	617	5.8	C	579	5.5	C	679	6.4	D	361	3.4	C
		South	East	322	2.2	B	479	3.3	C	543	3.7	C	352	2.4	B
			West	750	5.7	C	936	7.1	D	1236	9.3	D	734	5.5	C
	Corner	Northwest		1706	3.6	F	1580	7.8	F	2675	3.8	F	1365	10.3	E
		Northeast		1076	6.4	F	759	12.0	E	1409	0.0	F	724	12.3	E
		Southeast		949	20.7	D	1000	16.6	D	952	14.9	E	748	23.3	D
		Southwest		1391	8.0	F	1524	7.4	F	2003	2.1	F	1356	8.9	E
	Crosswalk	West		753	15.6	D	717	17.6	D	1253	9.9	E	766	16.6	D
		North		762	14.0	E	557	20.8	D	1153	9.4	E	447	27.0	C
		East		298	52.4	B	196	76.0	A	217	68.6	A	237	62.7	A
		South		586	18.7	D	607	17.0	D	670	14.3	E	461	23.0	D
6th Avenue & 33rd Street	Sidewalk	West	South	1007	9.6	D	780	7.4	D	984	9.4	D	363	3.5	C
			North	505	4.7	C	412	3.8	C	631	5.9	C	392	3.6	C
		North	West	1033	6.5	D	1604	10.1	D	2008	12.6	E	1850	11.7	E
		South	West	738	4.5	C	998	6.1	D	1313	8.0	D	813	4.9	C
	Corner	Northwest		1550	20.9	D	1715	18.7	D	2342	10.8	E	1684	19.6	D
		Southwest		1562	3.8	F	2114	3.0	F	2406	1.4	F	1665	4.8	F
	Crosswalk	West		885	13.8	E	1267	8.2	E	1728	5.1	F	1259	8.6	E
		North		547	22.7	D	345	39.1	C	471	28.5	C	345	39.1	C
		South		579	21.0	D	552	20.9	D	581	19.5	D	315	37.9	C
Broadway & 34th Street	Sidewalk	West	South	1179	5.7	C	1423	6.9	D	2167	10.5	D	1530	7.4	D
			North	1179	6.0	C	914	4.6	C	1408	7.1	D	805	4.1	C
		North	West	815	4.0	C	880	4.3	C	1252	6.1	D	830	4.0	C
		South	West	1033	5.3	C	1604	8.2	D	2008	10.3	D	1850	9.5	D
	Corner	Northwest		2266	22.9	D	2368	19.6	D	3323	10.3	E	2835	15.1	D
		Southwest		1926	23.9	D	2883	14.2	E	3607	11.4	E	2847	14.6	E
	Crosswalk	West		785	30.9	C	1266	16.3	D	1602	11.0	E	1318	15.1	D
		North		1271	17.0	D	1009	25.3	C	1454	17.3	D	1306	18.7	D
		South		836	30.1	C	1067	20.8	D	1455	13.9	E	1100	20.5	D
Broadway & 33rd Street	Corner	Northeast		1182	13.7	E	1367	7.3	F	1406	5.5	F	1068	12.5	E
		Southeast		1170	11.7	E	1201	8.3	E	1300	4.8	F	824	15.3	D
	Crosswalk	North		589	15.3	D	532	19.8	D	683	15.8	D	396	27.7	C
		East		473	29.3	C	725	17.9	D	607	21.8	D	581	23.1	D
		South		520	31.3	C	357	43.2	B	546	25.2	C	205	78.8	A
6th Avenue & 34th Street	Corner	Northeast		1571	29.9	C	2209	15.8	D	2676	10.9	E	2294	14.5	E
		Southeast		1609	24.3	C	2348	12.5	E	2673	8.2	E	2341	13.1	E
	Crosswalk	North		640	12.9	E	901	9.9	E	1135	7.6	F	1115	7.7	F
		East		683	25.1	C	1061	15.6	D	1158	14.3	E	1098	14.9	E
		South		747	13.0	E	1085	7.3	F	1330	5.2	F	1066	7.7	F

2014 Future with the Proposed Project - Single-Tenant Scenario - Pedestrian LOS Analysis

Location				AM			MD			PM			SAT		
				Peak 15 Volume	PFM / SFP	LOS	Peak 15 Volume	PFM / SFP	LOS	Peak 15 Volume	PFM / SFP	LOS	Peak 15 Volume	PFM / SFP	LOS
8th Avenue & 31st Street	Sidewalk	West	South	196	1.8	B	184	1.7	B	277	2.6	B	94	0.9	B
			North	98	1.2	B	58	0.7	B	88	1.0	B	52	0.6	B
		North	West	222	2.1	B	217	2.1	B	316	3.0	C	172	1.6	B
			East	352	1.2	B	284	1.0	B	340	1.2	B	235	0.8	B
		East	North	80	0.3	A	58	0.2	A	95	0.3	A	170	0.5	B
			South	320	3.3	C	360	3.7	C	489	5.0	C	82	0.8	B
		South	East	95	0.9	B	172	1.7	B	279	2.7	B	243	2.3	B
			West	221	2.1	B	238	2.2	B	324	3.0	C	195	1.8	B
	Corner	Northwest		506	34.6	C	387	46.1	B	534	32.8	C	559	30.5	C
		Northeast		578	143.9	A	529	160.9	A	839	99.4	A	317	275.8	A
		Southeast		531	28.9	C	556	25.6	C	832	12.7	E	352	45.0	B
		Southwest		376	25.1	C	469	18.4	D	574	13.1	E	618	9.0	E
	Crosswalk	West		227	44.3	B	250	40.1	B	287	31.7	C	463	19.3	D
		North		136	102.0	A	75	175.4	A	160	85.3	A	75	178.5	A
		East		405	33.0	C	372	34.7	C	575	20.6	D	190	71.5	A
		South		118	123.5	A	168	85.7	A	235	59.1	B	140	104.4	A
8th Avenue & 33rd Street	Sidewalk	West	South	347	4.4	C	120	1.5	B	415	5.3	C	75	1.0	B
			North	273	3.4	C	216	2.7	B	353	4.4	C	207	2.6	B
		North	West	473	5.8	C	413	5.1	C	688	8.5	D	227	2.8	B
			East	660	4.2	C	359	2.3	B	1104	7.0	D	424	2.7	B
		East	North	64	0.4	A	227	1.3	B	109	0.6	B	229	1.3	B
			South	148	0.5	B	96	0.3	A	203	0.7	B	432	1.6	B
		South	East	237	2.0	B	167	1.4	B	271	2.3	B	454	3.8	C
			West	381	3.8	C	275	2.7	B	439	4.4	C	224	2.2	B
	Corner	Northwest		625	24.7	C	491	33.0	C	576	26.1	C	372	45.6	B
		Northeast		865	84.1	A	704	99.7	A	1104	56.1	B	828	83.3	A
		Southeast		632	68.3	A	549	85.5	A	1060	43.5	B	931	47.2	B
		Southwest		420	37.1	C	326	48.8	B	488	30.2	C	457	31.5	C
	Crosswalk	West		236	36.7	C	212	42.2	B	279	26.1	C	194	46.3	B
		North		295	60.2	A	201	87.1	A	193	90.4	A	121	148.4	A
		East		447	24.3	C	440	27.9	C	846	14.1	E	636	17.6	D
		South		126	174.5	A	98	224.0	A	159	138.5	A	243	90.3	A
8th Avenue & 34th Street	Sidewalk	West	South	447	4.3	C	355	3.4	C	563	5.4	C	404	3.9	C
			North	400	2.0	B	399	2.0	B	448	2.3	B	209	1.1	B
		North	West	487	4.9	C	586	5.9	C	527	5.3	C	257	2.6	B
			East	869	8.2	D	753	7.1	D	955	9.0	D	476	4.5	C
		East	North	338	2.3	B	489	3.3	C	477	3.2	C	506	3.4	C
			South	276	1.9	B	282	2.0	B	361	2.5	B	263	1.8	B
		South	East	366	2.5	B	307	2.1	B	824	5.6	C	354	2.4	B
			West	380	4.6	C	310	3.8	C	565	6.8	D	655	7.9	D
	Corner	Northwest		1020	39.2	C	974	40.1	B	881	43.0	B	1222	26.0	C
		Northeast		1265	28.3	C	1361	27.2	C	1660	19.0	D	1134	35.9	C
		Southeast		1308	64.3	A	2120	35.5	C	1730	46.7	B	468	198.1	A
		Southwest		1241	20.4	D	1973	11.0	E	1288	22.1	D	715	45.1	B
	Crosswalk	West		521	20.2	D	494	20.9	D	440	22.7	D	497	19.2	D
		North		420	58.0	B	309	78.2	A	377	61.9	A	672	32.1	C
		East		651	21.3	D	708	19.5	D	938	14.7	E	285	53.5	B
		South		624	40.8	B	1399	15.8	D	771	31.3	C	166	164.8	A

Location				AM			MD			PM			SAT		
				Peak 15 Volume	PFM / SFP	LOS	Peak 15 Volume	PFM / SFP	LOS	Peak 15 Volume	PFM / SFP	LOS	Peak 15 Volume	PFM / SFP	LOS
7th Avenue & 31st Street	Sidewalk	West	South	117	1.2	B	98	1.0	B	152	1.6	B	88	0.9	B
			North	169	0.5	B	223	0.7	B	246	0.8	B	426	1.3	B
		North	West	1256	4.1	C	914	3.0	C	1225	4.0	C	1254	4.1	C
			East	805	2.5	B	964	3.0	C	1013	3.2	C	562	1.8	B
		East	North	242	1.5	B	299	1.8	B	320	1.9	B	247	1.5	B
			South	418	2.6	B	354	2.2	B	395	2.4	B	212	1.3	B
		South	East	734	2.7	B	892	3.3	C	803	3.0	C	513	1.9	B
			West	899	5.1	C	788	4.5	C	1105	6.3	D	528	3.0	C
	Corner	Northwest		1575	48.9	B	1018	89.8	A	1703	54.8	B	1266	70.9	A
		Northeast		1572	23.5	D	1413	26.7	C	1314	29.2	C	903	46.2	B
		Southeast		1085	30.1	C	1245	22.9	D	1024	25.8	C	700	46.7	B
		Southwest		1300	16.8	D	798	27.0	C	1509	7.4	F	788	28.6	C
	Crosswalk	West		860	13.2	E	574	22.5	D	1162	10.9	E	632	20.9	D
		North		668	15.5	D	367	33.1	C	428	29.5	C	289	41.9	B
		East		733	19.5	D	857	14.0	E	664	18.0	D	480	29.1	C
		South		300	36.6	C	174	63.3	A	303	33.7	C	122	91.7	A
7th Avenue & 32nd Street	Sidewalk	North	West	905	3.0	C	1130	3.8	C	1322	4.4	C	1307	4.4	C
			East	1305	3.4	C	1427	3.7	C	1674	4.4	C	515	1.3	B
		East	North	1184	10.8	D	593	5.4	C	1104	10.1	D	152	1.4	B
			South	591	5.8	C	513	5.0	C	666	6.5	D	241	2.4	B
		South	East	805	2.1	B	964	2.5	B	1013	2.6	B	562	1.4	B
			West	1231	4.6	C	909	3.4	C	1197	4.4	C	1250	4.6	C
	Corner	Northeast		1788	65.0	A	1365	80.2	A	2540	34.5	C	1181	93.9	A
		Southeast		969	47.0	B	958	43.1	B	1663	15.4	D	1329	27.8	C
	Crosswalk	North		1072	5.0	F	387	19.8	D	1038	7.5	F	816	7.7	F
		East		392	61.7	A	620	35.9	C	1045	18.1	D	306	79.9	A
		South		525	15.2	D	168	45.7	B	558	11.6	E	889	7.9	F
7th Avenue & 33rd Street	Sidewalk	West	South	306	1.1	B	310	1.2	B	479	1.8	B	589	2.2	B
			North	351	2.3	B	387	2.5	B	420	2.7	B	480	3.1	C
		North	West	1237	5.3	C	902	3.9	C	1402	6.0	C	744	3.2	C
			East	693	3.6	C	1393	7.1	D	1201	6.2	D	1305	6.7	D
		East	North	494	5.2	C	518	5.5	C	683	7.2	D	446	4.7	C
			South	1034	6.6	D	742	4.8	C	1125	7.2	D	412	2.6	B
		South	East	1026	2.7	B	1449	3.8	C	1336	3.5	C	585	1.5	B
			West	905	1.9	B	1130	2.3	B	1322	2.7	B	1307	2.7	B
	Corner	Northwest		1428	70.8	A	1082	94.6	A	1687	58.6	B	1210	81.9	A
		Northeast		1198	5.7	F	1737	3.9	F	1794	1.6	F	1857	4.9	F
		Southeast		1307	91.3	A	1990	55.7	B	2006	53.5	B	1780	64.7	A
		Southwest		1490	74.6	A	1323	87.0	A	1925	61.0	A	1628	66.4	A
	Crosswalk	West		939	23.8	D	713	30.6	C	1210	14.1	E	731	32.9	C
		North		384	14.2	E	336	16.8	D	424	13.4	E	435	11.7	E
		East		597	40.9	B	1068	18.7	D	1002	21.4	D	1153	16.2	D
		South		437	16.0	D	534	11.9	E	616	9.5	E	526	13.4	E
7th Avenue & 34th Street	Sidewalk	West	South	539	2.6	B	731	3.5	C	934	4.5	C	539	2.6	B
			North	659	2.7	B	1037	4.3	C	1145	4.7	C	1148	4.7	C
		North	West	1751	8.2	D	1403	6.5	D	2398	11.2	E	1005	4.7	C
			East	1291	5.4	C	894	3.8	C	1239	5.2	C	740	3.1	C
		East	North	946	4.7	C	729	3.7	C	1131	5.7	C	646	3.2	C
			South	969	3.7	C	1144	4.4	C	1761	6.8	D	1227	4.7	C
		South	East	693	3.2	C	1393	6.5	D	1201	5.6	C	1305	6.1	D
			West	1193	5.0	C	895	3.8	C	1358	5.7	C	745	3.1	C
	Corner	Northwest		3680	9.8	E	2624	13.5	E	4600	4.0	F	1832	19.5	D
		Northeast		1875	24.9	C	1963	19.6	D	2197	15.6	D	1811	23.7	D
		Southeast		2496	15.4	D	2033	16.5	D	2604	10.1	E	2481	15.5	D
		Southwest		3958	12.7	E	2507	35.7	C	4165	21.1	D	1711	55.9	B
	Crosswalk	West		2137	16.8	D	1271	25.3	C	2456	10.3	E	821	41.1	B
		North		1061	16.2	D	955	19.8	D	1017	18.6	D	919	19.7	D
		East		678	30.5	C	869	24.6	C	1042	20.7	D	795	27.0	C
		South		1734	10.9	E	1108	15.4	D	1544	9.9	E	766	24.0	C

Location				AM			MD			PM			SAT		
				Peak 15 Volume	PFM / SFP	LOS	Peak 15 Volume	PFM / SFP	LOS	Peak 15 Volume	PFM / SFP	LOS	Peak 15 Volume	PFM / SFP	LOS
6th Avenue & 31st Street	Sidewalk	West	South	405	3.9	C	347	3.3	C	378	3.6	C	204	1.9	B
			North	243	2.8	B	300	3.5	C	322	3.7	C	249	2.9	B
		North	West	674	4.4	C	900	5.9	C	1107	7.3	D	697	4.6	C
			East	338	1.5	B	482	2.2	B	559	2.5	B	355	1.6	B
		East	North	290	3.1	C	193	2.1	B	288	3.1	C	138	1.5	B
			South	265	1.7	B	169	1.1	B	324	2.1	B	137	0.9	B
		South	East	311	1.8	B	448	2.7	B	533	3.2	C	365	2.2	B
			West	624	5.2	C	779	6.5	D	900	7.5	D	633	5.3	C
	Corner	Northwest		934	15.8	D	928	19.5	D	1293	12.6	E	788	22.0	D
		Northeast		538	29.7	C	791	19.6	D	714	22.5	D	512	33.0	C
		Southeast		536	31.6	C	737	17.7	D	693	16.7	D	504	29.7	C
		Southwest		1013	18.4	D	1004	17.5	D	1265	11.2	E	807	25.1	C
	Crosswalk	West		585	15.9	D	492	20.7	D	933	10.2	E	481	21.2	D
		North		244	49.8	B	259	46.9	B	233	53.4	B	201	59.8	B
		East		246	47.3	B	385	26.6	C	412	23.3	D	281	38.9	C
		South		263	53.3	B	327	40.9	B	255	52.1	B	196	69.5	A
6th Avenue & 32nd Street	Sidewalk	West	South	508	3.1	C	501	3.0	C	575	3.5	C	245	1.5	B
			North	1418	13.5	E	848	8.1	D	1312	12.5	E	245	2.3	B
		North	West	648	3.9	C	668	4.0	C	1109	6.7	D	544	3.3	C
			East	130	5.8	C	89	4.0	C	185	8.2	D	64	2.9	B
		East	North	611	4.7	C	526	4.0	C	790	6.1	D	384	3.0	B
			South	623	5.9	C	585	5.5	C	687	6.5	D	369	3.5	C
		South	East	336	2.3	B	478	3.3	C	555	3.8	C	352	2.4	B
			West	750	5.7	C	936	7.1	D	1236	9.3	D	734	5.5	C
	Corner	Northwest		1551	5.1	F	1360	10.2	E	2497	4.4	F	1252	11.8	E
		Northeast		956	7.3	F	611	16.7	D	1270	1.5	F	665	14.2	E
		Southeast		870	23.1	D	910	19.1	D	861	17.5	D	709	25.0	C
		Southwest		1280	9.9	E	1403	8.9	E	1875	2.6	F	1303	9.6	E
	Crosswalk	West		677	17.6	D	640	20.1	D	1167	10.9	E	731	17.5	D
		North		686	15.8	D	455	25.6	C	1063	10.2	E	408	29.9	C
		East		255	62.9	A	151	101.0	A	167	90.1	A	216	69.1	A
		South		550	19.9	D	563	18.5	D	628	15.6	D	443	24.1	C
6th Avenue & 33rd Street	Sidewalk	West	South	1426	13.6	E	991	9.4	D	1463	13.9	E	579	5.5	C
			North	329	3.1	C	248	2.3	B	410	3.8	C	236	2.2	B
		North	West	1084	6.8	D	1558	9.8	D	2044	12.9	E	1805	11.4	E
		South	West	605	3.7	C	735	4.5	C	1057	6.4	D	558	3.4	C
	Corner	Northwest		1658	19.2	D	1659	19.4	D	2420	9.2	E	1632	20.6	D
		Southwest		1832	0.7	F	2118	2.6	F	2633	0.8	F	1677	4.0	F
	Crosswalk	West		1049	11.6	E	1246	8.5	E	1845	4.5	F	1240	8.9	E
		North		583	21.1	D	371	36.2	C	523	25.5	C	371	36.2	C
		South		691	17.4	D	633	18.0	D	713	15.6	D	397	29.6	C
Broadway & 34th Street	Sidewalk	West	South	1047	5.1	C	1227	5.9	C	1945	9.4	D	1322	6.4	D
			North	990	5.0	C	751	3.8	C	1177	6.0	C	662	3.3	C
		North	West	763	3.7	C	813	4.0	C	1169	5.7	C	762	3.7	C
		South	West	1084	5.6	C	1558	8.0	D	2044	10.5	D	1805	9.3	D
	Corner	Northwest		2115	24.9	C	2209	21.8	D	3109	11.5	E	2684	16.4	D
		Southwest		1878	25.0	C	2722	15.6	D	3459	12.4	E	2680	16.1	D
	Crosswalk	West		743	32.9	C	1175	18.0	D	1514	11.8	E	1228	16.5	D
		North		1213	18.0	D	977	26.3	C	1386	18.3	D	1277	19.2	D
		South		846	29.7	C	1068	20.8	D	1458	13.9	E	1098	20.5	D
Broadway & 33rd Street	Corner	Northeast		1289	12.3	E	1440	6.5	F	1543	4.2	F	1141	11.2	E
		Southeast		1353	8.8	E	1327	6.6	F	1517	2.8	F	952	12.0	E
	Crosswalk	North		626	14.2	E	558	18.7	D	736	14.4	E	423	25.7	C
		East		543	24.5	C	771	16.6	D	692	18.6	D	626	21.0	D
		South		632	25.2	C	437	34.5	C	679	19.7	D	287	55.1	B
6th Avenue & 34th Street	Corner	Northeast		1603	29.4	C	2230	15.7	D	2711	11.0	E	2317	14.5	E
		Southeast		1711	22.4	D	2407	12.0	E	2784	7.7	F	2396	12.6	E
	Crosswalk	North		579	14.6	E	864	10.4	E	1061	8.3	E	1081	8.0	F
		East		776	21.4	D	1118	14.6	E	1266	12.8	E	1155	14.0	E
		South		757	12.8	E	1086	7.3	F	1333	5.2	F	1065	7.7	F

2014 Future with the Proposed Project - Single-Tenant Office Scenario - Pedestrian Impact Assessment

Location				AM				MD				PM				SAT			
				Volume	PFM / SFP	LOS	Impact?	Volume	PFM / SFP	LOS	Impact?	Volume	PFM / SFP	LOS	Impact?	Volume	PFM / SFP	LOS	Impact?
8th Avenue & 31st Street	Sidewalk	West	South	0	0.0	B	No	0	0.0	B	No	0	0.0	B	No	0	0.0	B	No
			North	1	0.0	B	No	0	0.0	B	No	0	0.0	B	No	0	0.0	B	No
		North	West	0	0.0	B	No	0	0.0	B	No	0	0.0	C	No	1	0.0	B	No
			East	1	0.0	B	No	1	0.0	B	No	1	0.0	B	No	0	0.0	B	No
		East	North	4	0.1	A	No	1	0.0	A	No	3	0.0	A	No	1	0.0	B	No
			South	3	0.0	C	No	0	0.0	C	No	2	0.0	C	No	0	0.0	B	No
		South	East	7	0.0	B	No	1	0.1	B	No	5	0.1	B	No	0	0.0	B	No
			West	1	0.0	B	No	1	0.0	B	No	1	0.0	C	No	0	0.0	B	No
	Corner	Northwest		1	-0.1	C	No	1	-0.2	B	No	1	-0.1	C	No	0	-0.1	C	No
		Northeast		5	-1.2	A	No	2	-0.7	A	No	5	-0.7	A	No	1	-0.6	A	No
		Southeast		7	-0.5	C	No	2	-0.1	C	No	7	-0.2	E	No	0	-0.1	B	No
		Southwest		1	-0.2	C	No	1	-0.1	D	No	1	-0.1	E	No	1	0.0	E	No
	Crosswalk	West		0	-0.2	B	No	0	-0.1	B	No	1	-0.1	C	No	0	-0.1	D	No
		North		1	-0.5	A	No	0	-5.0	A	No	0	-0.3	A	No	0	-0.5	A	No
		East		4	-0.4	C	No	1	-0.2	C	No	4	-0.2	D	No	1	-0.2	A	No
		South		1	-0.7	A	No	0	-0.2	A	No	0	-0.2	B	No	0	-0.1	A	No
8th Avenue & 33rd Street	Sidewalk	West	South	25	0.3	C	No	0	0.0	B	No	19	0.2	C	No	0	0.0	B	No
			North	4	0.0	C	No	5	0.0	B	No	6	0.0	C	No	5	0.1	B	No
		North	West	2	0.0	C	No	3	0.0	C	No	5	0.1	D	No	6	0.1	B	No
			East	7	0.0	C	No	11	0.1	B	No	15	0.1	D	No	17	0.1	B	No
		East	North	8	0.1	A	No	16	0.1	B	No	20	0.1	B	No	19	0.1	B	No
			South	54	0.2	A-->B	No	5	0.0	A	No	49	0.1	B	No	8	0.1	B	No
		South	East	26	0.2	B	No	1	0.0	B	No	24	0.2	B	No	0	0.0	C	No
			West	0	0.0	C	No	1	0.0	B	No	0	0.0	C	No	1	0.0	B	No
	Corner	Northwest		6	-0.4	C	No	7	-0.6	C	No	10	-0.6	C	No	11	-1.7	B	No
		Northeast		11	-1.1	A	No	18	-2.7	A	No	25	-1.4	B	No	27	-3.1	A	No
		Southeast		54	-6.4	A	No	5	-0.8	A	No	49	-2.5	B	No	9	-0.6	B	No
		Southwest		30	-3.8	B-->C	No	3	-0.5	B	No	23	-1.5	C	No	5	-0.4	C	No
	Crosswalk	West		2	-0.5	C	No	1	-0.3	B	No	2	-0.2	C	No	2	-2.9	B	No
		North		4	-0.9	A	No	6	-2.7	A	No	8	-4.0	A	No	9	-12.0	A	No
		East		1	-0.1	C	No	2	-0.1	C	No	3	-0.1	E	No	6	-0.2	D	No
		South		27	-47.8	A	No	2	-4.0	A	No	21	-22.5	A	No	2	-1.0	A	No
8th Avenue & 34th Street	Sidewalk	West	South	1	0.0	C	No	2	0.0	C	No	2	0.0	C	No	2	0.0	C	No
			North	10	0.0	B	No	9	0.0	B	No	14	0.1	B	No	13	0.1	B	No
		North	West	5	0.0	C	No	8	0.1	C	No	11	0.1	C	No	11	0.1	B	No
			East	9	0.1	D	No	15	0.2	D	No	20	0.2	D	No	18	0.2	C	No
		East	North	6	0.1	B	No	8	0.1	C	No	11	0.1	C	No	8	0.1	C	No
			South	10	0.1	B	No	12	0.1	B	No	16	0.1	B	No	14	0.1	B	No
		South	East	6	0.1	B	No	11	0.1	B	No	15	0.1	C	No	17	0.1	B	No
			West	2	0.0	C	No	3	0.1	C	No	5	0.0	D	No	5	0.0	D	No
	Corner	Northwest		14	-0.8	C	No	17	-0.9	B	No	24	-1.4	B	No	24	-0.8	C	No
		Northeast		22	-0.6	C	No	31	-0.8	C	No	41	-0.6	D	No	38	-1.6	C	No
		Southeast		16	-1.0	A	No	24	-0.5	C	No	31	-1.2	B	No	31	-14.7	A	No
		Southwest		10	-0.2	D	No	13	-0.2	E	No	20	-0.5	D	No	19	-1.6	B	No
	Crosswalk	West		6	-0.3	D	No	8	-0.4	D	No	10	-0.6	D	No	11	-0.5	D	No
		North		9	-1.3	B	No	9	-2.7	A	No	14	-2.4	A	No	13	-0.7	C	No
		East		12	-0.4	D	No	18	-0.5	D	No	23	-0.5	D-->E	No	23	-4.9	B	No
		South		5	-0.4	B	No	6	-0.1	D	No	9	-0.4	C	No	8	-8.7	A	No

Location				AM				MD				PM				SAT			
				Volume	PFM / SFP	LOS	Impact?	Volume	PFM / SFP	LOS	Impact?	Volume	PFM / SFP	LOS	Impact?	Volume	PFM / SFP	LOS	Impact?
7th Avenue & 31st Street	Sidewalk	West	South	3	0.0	B	No	0	0.0	B	No	2	0.1	B	No	0	0.0	B	No
			North	3	0.0	B	No	1	0.0	B	No	3	0.0	B	No	0	0.0	B	No
		North	West	31	0.1	C	No	6	0.0	B-->C	No	30	0.1	C	No	2	0.0	C	No
			East	14	0.0	B	No	0	0.0	C	No	-1	0.0	C	No	5	0.1	B	No
		East	North	0	0.0	B	No	0	0.0	B	No	0	0.0	B	No	0	0.0	B	No
			South	9	0.1	B	No	7	0.1	B	No	9	0.0	B	No	8	0.1	B	No
		South	East	-4	-0.1	B	No	-4	-0.1	C	No	-19	-0.1	C	No	-1	0.0	B	No
			West	1	0.0	C	No	1	0.0	C	No	1	0.0	D	No	0	0.0	C	No
	Corner	Northwest		19	-0.8	B	No	3	-0.2	A	No	17	-0.6	B	No	0	-0.1	A	No
		Northeast		14	-0.2	D	No	0	0.0	C	No	-1	-0.1	C	No	5	-0.3	B	No
		Southeast		3	-0.3	C	No	0	-0.1	D	No	-12	0.4	C	No	5	-0.4	B	No
		Southwest		4	-0.1	D	No	2	0.0	C	No	4	0.0	F	No	1	0.0	C	No
	Crosswalk	West		5	-0.1	E	No	3	-1.0	D	No	5	0.0	E	No	1	0.0	D	No
		North		11	-0.3	D	No	-2	0.1	C	No	10	-0.7	C	No	-1	0.1	B	No
		East		4	-0.2	D	No	2	0.0	E	No	-11	0.4	D	No	7	-0.5	C	No
		South		-1	0.1	C	No	-1	0.6	A	No	-1	0.1	C	No	0	0.4	A	No
7th Avenue & 32nd Street	Sidewalk	North	West	-505	-1.7	C	No	-326	-1.1	C	No	-525	-1.8	D-->C	No	-280	-0.9	C	No
			East	229	-0.1	C	No	-125	-1.3	C	No	179	-0.4	C	No	-145	-0.8	B	No
		East	North	-332	-3.0	E-->D	No	-361	-3.3	D-->C	No	-309	-2.8	E-->D	No	-148	-1.3	B	No
			South	-85	-0.8	D-->C	No	-127	-1.3	D-->C	No	-107	-1.1	D	No	-61	-0.6	B	No
		South	East	14	0.1	B	No	0	0.0	B	No	-1	0.0	B	No	5	0.0	B	No
			West	20	0.1	C	No	5	0.1	C	No	19	0.0	C	No	2	0.0	C	No
	Corner	Northeast		-204	46.9	D-->A	No	-409	63.6	D-->A	No	-129	30.3	F-->C	No	-234	71.3	D-->A	No
		Southeast		-318	11.7	C-->B	No	-331	11.3	C-->B	No	-332	2.5	E-->D	No	-119	2.3	C	No
	Crosswalk	North		-233	1.1	F	No	-268	9.0	E-->D	No	-138	1.4	F	No	-160	1.5	F	No
		East		-66	9.6	B-->A	No	-105	5.9	C	No	-74	1.4	D	No	-28	7.1	A	No
		South		-248	4.9	E-->D	No	-222	26.1	D-->B	No	-253	3.6	E	No	-89	0.7	F	No
7th Avenue & 33rd Street	Sidewalk	West	South	54	0.2	B	No	4	0.1	B	No	49	0.2	B	No	9	0.0	B	No
			North	16	0.1	B	No	21	0.1	B	No	27	0.1	B	No	36	0.2	B-->C	No
		North	West	-78	-0.3	C	No	-41	-0.1	C	No	-92	-0.4	D-->C	No	-32	-0.1	C	No
			East	-82	-0.4	C	No	49	0.2	D	No	-77	-0.4	D	No	39	0.2	D	No
		East	North	-12	-0.2	C	No	106	1.1	C	No	51	0.5	D	No	53	0.5	C	No
			South	-24	-0.2	D	No	-39	-0.2	C	No	87	0.5	D	No	50	0.3	B	No
		South	East	172	-0.1	B	No	-81	-1.2	C	No	143	-0.4	C	No	-84	-0.7	B	No
			West	-505	-1.0	B	No	-326	-0.7	B	No	-525	-1.1	C-->B	No	-280	-0.6	C-->B	No
	Corner	Northwest		-262	12.1	B-->A	No	-145	11.6	A	No	-282	9.5	B	No	-115	7.6	A	No
		Northeast		-102	0.1	F	No	70	-0.1	F	No	-37	0.2	F	No	81	-0.5	F	No
		Southeast		-135	64.1	C-->A	No	-200	41.5	E-->B	No	-99	39.5	E-->B	No	-107	45.5	D-->A	No
		Southwest		-346	16.6	B-->A	No	-256	15.7	A	No	-355	11.3	B-->A	No	-178	7.4	B-->A	No
	Crosswalk	West		-196	4.2	D	No	-132	4.7	C	No	-237	2.8	E	No	-107	4.7	C	No
		North		-54	2.3	E	No	-5	0.2	D	No	-29	1.2	E	No	1	0.1	E	No
		East		-130	9.8	C-->B	No	-62	1.3	D	No	-134	2.7	D	No	-15	0.3	D	No
		South		-146	4.3	E-->D	No	-122	2.5	E	No	-114	1.5	E	No	-70	1.8	E	No
7th Avenue & 34th Street	Sidewalk	West	South	10	0.0	B	No	13	0.0	C	No	16	0.1	C	No	14	0.1	B	No
			North	19	0.1	B	No	7	0.1	C	No	23	0.1	C	No	8	0.0	C	No
		North	West	20	0.1	D	No	35	0.1	D	No	32	0.2	E	No	34	0.2	C	No
			East	-60	-0.3	C	No	-53	-0.2	C	No	-90	-0.4	C	No	-55	-0.3	C	No
		East	North	-234	-1.2	C	No	-178	-0.8	C	No	-277	-1.4	D-->C	No	-156	-0.8	C	No
			South	-221	-0.9	C	No	-282	-1.1	C	No	-418	-1.6	D	No	-303	-1.2	C	No
		South	East	-82	-0.4	C	No	49	0.2	D	No	-77	-0.4	C	No	39	0.2	C-->D	No
			West	-102	-0.5	C	No	-41	-0.1	C	No	-114	-0.5	D-->C	No	-30	-0.2	C	No
	Corner	Northwest		-59	0.3	E	No	-12	0.2	E	No	-53	0.2	F	No	-5	0.2	D	No
		Northeast		-215	2.8	D-->C	No	-139	1.5	D	No	-262	2.3	E-->D	No	-137	2.1	D	No
		Southeast		-263	2.0	E-->D	No	-168	1.6	E-->D	No	-383	1.9	E	No	-190	1.4	E-->D	No
		Southwest		-72	0.5	E	No	-26	0.5	C	No	-85	0.7	D	No	-24	1.1	B	No
	Crosswalk	West		-10	0.0	D	No	26	-0.6	C	No	11	-0.1	E	No	31	-1.8	B	No
		North		-50	0.9	D	No	-38	0.9	D	No	-63	1.3	D	No	-37	0.9	D	No
		East		-111	5.1	C	No	-33	1.1	D-->C	No	-124	2.5	D	No	-40	1.4	C	No
		South		-64	0.4	E	No	-48	0.7	E-->D	No	-105	0.8	E	No	-57	1.8	D-->C	No

Location				AM				MD				PM				SAT			
				Volume	PFM / SFP	LOS	Impact?	Volume	PFM / SFP	LOS	Impact?	Volume	PFM / SFP	LOS	Impact?	Volume	PFM / SFP	LOS	Impact?
6th Avenue & 31st Street	Sidewalk	West	South	0	0.0	C	No	0	0.0	C	No	0	0.0	C	No	0	0.0	B	No
			North	0	0.0	B	No	0	0.0	C	No	0	0.0	C	No	0	0.0	B	No
		North	West	0	0.0	C	No	0	0.0	C	No	0	0.0	D	No	0	0.0	C	No
			East	14	0.0	B	No	-1	0.0	B	No	13	0.0	B	No	0	0.0	B	No
		East	North	0	0.0	C	No	0	0.0	B	No	0	0.0	C	No	0	0.0	B	No
			South	0	0.0	B	No	0	0.0	B	No	0	0.0	B	No	0	0.0	B	No
		South	East	0	0.0	B	No	0	0.0	B	No	0	0.0	C	No	0	0.0	B	No
			West	0	0.0	C	No	0	0.0	D	No	0	0.0	D	No	0	0.0	C	No
	Corner	Northwest		0	0.0	D	No	0	0.0	D	No	0	0.0	E	No	0	0.0	D	No
		Northeast		0	0.0	C	No	0	0.0	D	No	0	0.0	D	No	0	0.0	C	No
		Southeast		0	0.0	C	No	0	0.0	D	No	0	0.0	D	No	0	0.0	C	No
		Southwest		0	0.0	D	No	0	0.0	D	No	0	0.0	E	No	0	0.0	C	No
	Crosswalk	West		0	0.0	D	No	0	-0.8	D	No	0	0.0	E	No	0	0.0	D	No
		North		0	0.0	B	No	0	0.0	B	No	0	0.0	B	No	0	0.0	B	No
		East		0	0.0	B	No	0	0.0	C	No	0	0.0	D	No	0	0.0	C	No
		South		0	0.0	B	No	0	0.0	B	No	0	0.0	B	No	0	0.0	A	No
6th Avenue & 32nd Street	Sidewalk	West	South	-123	-0.7	C	No	-126	-0.8	C	No	-143	-0.8	C	No	-59	-0.3	B	No
			North	-45	-0.4	E	No	-101	-0.9	D	No	-43	-0.4	E	No	-53	-0.5	B	No
		North	West	-202	-1.2	C	No	-359	-2.2	D-->C	No	-332	-2.0	D	No	-296	-1.8	C	No
			East	24	1.1	C	No	0	0.0	C	No	23	1.0	D	No	0	0.0	B	No
		East	North	10	0.1	C	No	2	0.0	C	No	2	0.0	D	No	2	0.1	B	No
			South	6	0.1	C	No	6	0.0	C	No	8	0.1	D	No	8	0.1	C	No
		South	East	14	0.1	B	No	-1	0.0	C	No	12	0.1	C	No	0	0.0	B	No
			West	0	0.0	C	No	0	0.0	D	No	0	0.0	D	No	0	0.0	C	No
	Corner	Northwest		-155	1.5	F	No	-220	2.4	F-->E	No	-178	0.6	F	No	-113	1.5	E	No
		Northeast		-120	0.9	F	No	-148	4.7	E-->D	No	-139	1.5	F	No	-59	1.9	E	No
		Southeast		-79	2.4	D	No	-90	2.5	D	No	-91	2.6	E-->D	No	-39	1.7	D-->C	No
		Southwest		-111	1.9	F-->E	No	-121	1.5	F-->E	No	-128	0.5	F	No	-53	0.7	E	No
	Crosswalk	West		-76	2.0	D	No	-77	2.5	D	No	-86	1.0	E	No	-35	0.9	D	No
		North		-76	1.8	E-->D	No	-102	4.8	D-->C	No	-90	0.8	E	No	-39	2.9	C	No
		East		-43	10.5	B-->A	No	-45	25.0	A	No	-50	21.5	A	No	-21	6.4	A	No
		South		-36	1.2	D	No	-44	1.5	D	No	-42	1.3	E-->D	No	-18	1.1	D-->C	No
6th Avenue & 33rd Street	Sidewalk	West	South	419	4.0	D-->E	No	211	2.0	D	No	479	4.5	D-->E	No	216	2.0	C	No
			North	-176	-1.6	C	No	-164	-1.5	C-->B	No	-221	-2.1	C	No	-156	-1.4	C-->B	No
		North	West	51	0.3	D	No	-46	-0.3	D	No	36	0.3	E	No	-45	-0.3	E	No
		South	West	-133	-0.8	C	No	-263	-1.6	D-->C	No	-256	-1.6	D	No	-255	-1.5	C	No
	Corner	Northwest		108	-1.7	D	No	-56	0.7	D	No	78	-1.6	E	Impact	-52	1.0	D	No
		Southwest		270	-3.1	F	Impact	4	-0.4	F	No	227	-0.6	F	No	12	-0.8	F	No
	Crosswalk	West		164	-2.2	E	Impact	-21	0.3	E	No	117	-0.6	F	No	-19	0.3	E	No
		North		36	-1.6	D	No	26	-2.9	C	No	52	-3.0	C	No	26	-2.9	C	No
		South		112	-3.6	D	No	81	-2.9	D	No	132	-3.9	D	No	82	-8.3	C	No
Broadway & 34th Street	Sidewalk	West	South	-132	-0.6	C	No	-196	-1.0	D-->C	No	-222	-1.1	D	No	-208	-1.0	D	No
			North	-189	-1.0	C	No	-163	-0.8	C	No	-231	-1.1	D-->C	No	-143	-0.8	C	No
		North	West	-52	-0.3	C	No	-67	-0.3	C	No	-83	-0.4	D-->C	No	-68	-0.3	C	No
		South	West	51	0.3	C	No	-46	-0.2	D	No	36	0.2	D	No	-45	-0.2	D	No
	Corner	Northwest		-151	2.0	D-->C	No	-159	2.2	D	No	-214	1.2	E	No	-151	1.3	D	No
		Southwest		-48	1.1	D-->C	No	-161	1.4	E-->D	No	-148	1.0	E	No	-167	1.5	E-->D	No
	Crosswalk	West		-42	2.0	C	No	-91	1.7	D	No	-88	0.8	E	No	-90	1.4	D	No
		North		-58	1.0	D	No	-32	1.0	C	No	-68	1.0	D	No	-29	0.5	D	No
		South		10	-0.4	C	No	1	0.0	D	No	3	0.0	E	No	-2	0.0	D	No
Broadway & 33rd Street	Corner	Northeast		107	-1.4	E	Impact	73	-0.8	F	No	137	-1.3	F	Impact	73	-1.3	E	Impact
		Southeast		183	-2.9	E	Impact	126	-1.7	E-->F	Impact	217	-2.0	F	Impact	128	-3.3	D-->E	No
	Crosswalk	North		37	-1.1	D-->E	No	26	-1.1	D	No	53	-1.4	D-->E	No	27	-2.0	C	No
		East		70	-4.8	C	No	46	-1.3	D	No	85	-3.2	D	No	45	-2.1	D	No
		South		112	-6.1	C	No	80	-8.7	B-->C	No	133	-5.5	C-->D	No	82	-23.7	A-->B	No
6th Avenue & 34th Street	Corner	Northeast		32	-0.5	C	No	21	-0.1	D	No	35	0.1	E	No	23	0.0	E	No
		Southeast		102	-1.9	C-->D	No	59	-0.5	E	No	111	-0.5	E-->F	No	55	-0.5	E	No
	Crosswalk	North		-61	1.7	E	No	-37	0.5	E	No	-74	0.7	F-->E	No	-34	0.3	F	No
		East		93	-3.7	C-->D	No	57	-1.0	D-->E	No	108	-1.5	E	Impact	57	-0.9	E	No
		South		10	-0.2	E	No	1	0.0	F	No	3	0.0	F	No	-1	0.0	F	No

2014 Future with the Proposed Project - Single-Tenant Scenario Mitigated - Pedestrian LOS Analysis

Location				AM			MD			PM			SAT		
				Peak 15 Volume	PFM / SFP	LOS	Peak 15 Volume	PFM / SFP	LOS	Peak 15 Volume	PFM / SFP	LOS	Peak 15 Volume	PFM / SFP	LOS
8th Avenue & 31st Street	Sidewalk	West	South	196	1.8	B	184	1.7	B	277	2.6	B	94	0.9	B
			North	98	1.2	B	58	0.7	B	88	1.0	B	52	0.6	B
		North	West	222	2.1	B	217	2.1	B	316	3.0	C	172	1.6	B
			East	352	1.2	B	284	1.0	B	340	1.2	B	235	0.8	B
		East	North	80	0.3	A	58	0.2	A	95	0.3	A	170	0.5	B
			South	320	3.3	C	360	3.7	C	489	5.0	C	82	0.8	B
		South	East	95	0.9	B	172	1.7	B	279	2.7	B	243	2.3	B
			West	221	2.1	B	238	2.2	B	324	3.0	C	195	1.8	B
	Corner	Northwest		506	34.6	C	387	46.1	B	534	32.8	C	559	30.5	C
		Northeast		578	143.9	A	529	160.9	A	839	99.4	A	317	275.8	A
		Southeast		531	28.9	C	556	25.6	C	832	12.7	E	352	45.0	B
		Southwest		376	25.1	C	469	18.4	D	574	13.1	E	618	9.0	E
	Crosswalk	West		227	44.3	B	250	40.1	B	287	31.7	C	463	19.3	D
		North		136	102.0	A	75	175.4	A	160	85.3	A	75	178.5	A
		East		405	33.0	C	372	34.7	C	575	20.6	D	190	71.5	A
		South		118	123.5	A	168	85.7	A	235	59.1	B	140	104.4	A
8th Avenue & 33rd Street	Sidewalk	West	South	347	4.4	C	120	1.5	B	415	5.3	C	75	1.0	B
			North	273	3.4	C	216	2.7	B	353	4.4	C	207	2.6	B
		North	West	473	5.8	C	413	5.1	C	688	8.5	D	227	2.8	B
			East	660	4.2	C	359	2.3	B	1104	7.0	D	424	2.7	B
		East	North	64	0.4	A	227	1.3	B	109	0.6	B	229	1.3	B
			South	148	0.5	B	96	0.3	A	203	0.7	B	432	1.6	B
		South	East	237	2.0	B	167	1.4	B	271	2.3	B	454	3.8	C
			West	381	3.8	C	275	2.7	B	439	4.4	C	224	2.2	B
	Corner	Northwest		625	24.7	C	491	33.0	C	576	26.1	C	372	45.6	B
		Northeast		865	84.1	A	704	99.7	A	1104	56.1	B	828	83.3	A
		Southeast		632	68.4	A	548	85.5	A	1059	43.5	B	931	47.3	B
		Southwest		420	37.2	C	326	48.8	B	488	30.2	C	457	31.5	C
	Crosswalk	West		236	36.7	C	212	42.2	B	279	26.1	C	194	46.3	B
		North		295	60.2	A	201	87.1	A	193	90.4	A	121	148.4	A
		East		447	24.3	C	440	27.9	C	846	14.1	E	636	17.6	D
		South		126	174.7	A	98	224.0	A	158	138.8	A	243	90.3	A
8th Avenue & 34th Street	Sidewalk	West	South	447	4.3	C	355	3.4	C	563	5.4	C	404	3.9	C
			North	400	2.0	B	399	2.0	B	448	2.3	B	209	1.1	B
		North	West	487	4.9	C	586	5.9	C	527	5.3	C	257	2.6	B
			East	869	8.2	D	753	7.1	D	955	9.0	D	476	4.5	C
		East	North	338	2.3	B	489	3.3	C	477	3.2	C	506	3.4	C
			South	276	1.9	B	282	2.0	B	361	2.5	B	263	1.8	B
		South	East	366	2.5	B	307	2.1	B	824	5.6	C	354	2.4	B
			West	380	4.6	C	310	3.8	C	565	6.8	D	655	7.9	D
	Corner	Northwest		1020	39.2	C	974	40.1	B	881	43.0	B	1222	26.0	C
		Northeast		1265	28.3	C	1361	27.2	C	1660	19.0	D	1134	35.9	C
		Southeast		1308	64.3	A	2120	35.5	C	1730	46.7	B	468	198.1	A
		Southwest		1241	20.4	D	1973	11.0	E	1288	22.1	D	715	45.1	B
	Crosswalk	West		521	20.2	D	494	20.9	D	440	22.7	D	497	19.2	D
		North		420	58.0	B	309	78.2	A	377	61.9	A	672	32.1	C
		East		651	21.3	D	708	19.5	D	938	14.7	E	285	53.5	B
		South		624	40.8	B	1399	15.8	D	771	31.3	C	166	164.8	A

Location				AM			MD			PM			SAT		
				Peak 15 Volume	PFM / SFP	LOS	Peak 15 Volume	PFM / SFP	LOS	Peak 15 Volume	PFM / SFP	LOS	Peak 15 Volume	PFM / SFP	LOS
7th Avenue & 31st Street	Sidewalk	West	South	117	1.2	B	98	1.0	B	152	1.6	B	88	0.9	B
			North	169	0.5	B	223	0.7	B	246	0.8	B	426	1.3	B
		North	West	1256	4.1	C	914	3.0	C	1225	4.0	C	1254	4.1	C
			East	805	2.5	B	964	3.0	C	1013	3.2	C	562	1.8	B
		East	North	242	1.5	B	299	1.8	B	320	1.9	B	247	1.5	B
			South	418	2.6	B	354	2.2	B	395	2.4	B	212	1.3	B
		South	East	734	2.7	B	892	3.3	C	803	3.0	C	513	1.9	B
			West	899	5.1	C	788	4.5	C	1105	6.3	D	528	3.0	C
	Corner	Northwest		1575	48.9	B	1018	89.8	A	1703	54.8	B	1266	70.9	A
		Northeast		1572	23.5	D	1413	26.7	C	1313	29.3	C	903	46.2	B
		Southeast		1085	30.2	C	1245	22.9	D	1023	25.8	C	700	46.7	B
		Southwest		1300	16.8	D	798	27.0	C	1509	7.4	F	788	28.6	C
	Crosswalk	West		860	13.2	E	574	22.5	D	1162	10.9	E	632	20.9	D
		North		668	15.5	D	367	33.1	C	428	29.5	C	289	41.9	B
		East		733	19.5	D	857	14.0	E	663	18.0	D	480	29.1	C
		South		300	36.6	C	174	63.3	A	303	33.7	C	122	91.7	A
7th Avenue & 32nd Street	Sidewalk	North	West	905	3.0	C	1130	3.8	C	1322	4.4	C	1307	4.4	C
			East	1305	3.4	C	1427	3.7	C	1674	4.4	C	515	1.3	B
		East	North	1184	10.8	D	593	5.4	C	1104	10.1	D	152	1.4	B
			South	591	5.8	C	513	5.0	C	666	6.5	D	241	2.4	B
		South	East	805	2.1	B	964	2.5	B	1013	2.6	B	562	1.4	B
			West	1231	4.6	C	909	3.4	C	1197	4.4	C	1250	4.6	C
	Corner	Northeast		1788	65.0	A	1365	80.2	A	2540	34.5	C	1181	93.9	A
		Southeast		969	47.0	B	958	43.1	B	1663	15.4	D	1329	27.8	C
	Crosswalk	North		1072	5.0	F	387	19.8	D	1038	7.5	F	816	7.7	F
		East		392	61.7	A	620	35.9	C	1045	18.1	D	306	79.9	A
		South		525	15.2	D	168	45.7	B	558	11.6	E	889	7.9	F
7th Avenue & 33rd Street	Sidewalk	West	South	306	1.1	B	310	1.2	B	479	1.8	B	589	2.2	B
			North	351	2.3	B	387	2.5	B	420	2.7	B	480	3.1	C
		North	West	1237	5.3	C	902	3.9	C	1402	6.0	C	744	3.2	C
			East	693	3.6	C	1393	7.1	D	1201	6.2	D	1305	6.7	D
		East	North	494	5.2	C	518	5.5	C	683	7.2	D	446	4.7	C
			South	1034	6.6	D	742	4.8	C	1125	7.2	D	412	2.6	B
		South	East	1026	2.7	B	1449	3.8	C	1336	3.5	C	585	1.5	B
			West	905	1.9	B	1130	2.3	B	1322	2.7	B	1307	2.7	B
	Corner	Northwest		1428	70.8	A	1082	94.6	A	1687	58.6	B	1210	81.9	A
		Northeast		1198	5.7	F	1737	3.9	F	1794	1.6	F	1857	4.9	F
		Southeast		1307	91.3	A	1990	55.7	B	2006	53.5	B	1780	64.7	A
		Southwest		1490	74.6	A	1323	87.0	A	1925	61.0	A	1628	66.4	A
	Crosswalk	West		939	23.8	D	713	30.6	C	1210	14.1	E	731	32.9	C
		North		384	14.2	E	336	16.8	D	424	13.4	E	435	11.7	E
		East		597	40.9	B	1068	18.7	D	1002	21.4	D	1153	16.2	D
		South		437	16.0	D	534	11.9	E	616	9.5	E	526	13.4	E
7th Avenue & 34th Street	Sidewalk	West	South	539	2.6	B	731	3.5	C	934	4.5	C	539	2.6	B
			North	659	2.7	B	1037	4.3	C	1145	4.7	C	1148	4.7	C
		North	West	1751	8.2	D	1403	6.5	D	2398	11.2	E	1005	4.7	C
			East	1291	5.4	C	894	3.8	C	1239	5.2	C	740	3.1	C
		East	North	946	4.7	C	729	3.7	C	1131	5.7	C	646	3.2	C
			South	969	3.7	C	1144	4.4	C	1761	6.8	D	1227	4.7	C
		South	East	693	3.2	C	1393	6.5	D	1201	5.6	C	1305	6.1	D
			West	1193	5.0	C	895	3.8	C	1358	5.7	C	745	3.1	C
	Corner	Northwest		3680	9.8	E	2624	13.5	E	4600	4.0	F	1832	19.5	D
		Northeast		1875	24.9	C	1963	19.6	D	2196	15.6	D	1811	23.7	D
		Southeast		2496	15.4	D	2033	16.5	D	2603	10.1	E	2481	15.5	D
		Southwest		3958	12.7	E	2507	35.7	C	4165	21.1	D	1711	55.9	B
	Crosswalk	West		2137	16.8	D	1271	25.3	C	2456	10.3	E	821	41.1	B
		North		1061	16.2	D	955	19.8	D	1017	18.6	D	919	19.7	D
		East		678	30.5	C	869	24.6	C	1041	20.7	D	795	27.0	C
		South		1734	10.9	E	1108	15.4	D	1544	9.9	E	766	24.0	C

Location				AM			MD			PM			SAT		
				Peak 15 Volume	PFM / SFP	LOS	Peak 15 Volume	PFM / SFP	LOS	Peak 15 Volume	PFM / SFP	LOS	Peak 15 Volume	PFM / SFP	LOS
6th Avenue & 31st Street	Sidewalk	West	South	405	3.9	C	347	3.3	C	378	3.6	C	204	1.9	B
			North	243	2.8	B	300	3.5	C	322	3.7	C	249	2.9	B
		North	West	674	4.4	C	900	5.9	C	1107	7.3	D	697	4.6	C
			East	338	1.5	B	482	2.2	B	559	2.5	B	355	1.6	B
		East	North	290	3.1	C	193	2.1	B	288	3.1	C	138	1.5	B
			South	265	1.7	B	169	1.1	B	324	2.1	B	137	0.9	B
		South	East	311	1.8	B	448	2.7	B	533	3.2	C	365	2.2	B
			West	624	5.2	C	779	6.5	D	900	7.5	D	633	5.3	C
	Corner	Northwest		934	15.8	D	928	19.5	D	1293	12.6	E	788	22.0	D
		Northeast		538	29.7	C	791	19.6	D	714	22.5	D	512	33.0	C
		Southeast		536	31.6	C	737	17.7	D	693	16.7	D	504	29.7	C
		Southwest		1013	18.4	D	1004	17.5	D	1265	11.2	E	807	25.1	C
	Crosswalk	West		585	15.9	D	492	20.7	D	933	10.2	E	481	21.2	D
		North		244	49.8	B	259	46.9	B	233	53.4	B	201	59.8	B
		East		246	47.3	B	385	26.6	C	412	23.3	D	281	38.9	C
		South		263	53.3	B	327	40.9	B	255	52.1	B	196	69.5	A
6th Avenue & 32nd Street	Sidewalk	West	South	508	3.1	C	501	3.0	C	575	3.5	C	245	1.5	B
			North	1418	13.5	E	848	8.1	D	1312	12.5	E	245	2.3	B
		North	West	648	3.9	C	668	4.0	C	1109	6.7	D	544	3.3	C
			East	130	5.8	C	89	4.0	C	185	8.2	D	64	2.9	B
		East	North	611	4.7	C	526	4.0	C	790	6.1	D	384	3.0	B
			South	623	5.9	C	585	5.5	C	687	6.5	D	369	3.5	C
		South	East	336	2.3	B	478	3.3	C	555	3.8	C	352	2.4	B
			West	750	5.7	C	936	7.1	D	1236	9.3	D	734	5.5	C
	Corner	Northwest		1550	5.1	F	1356	10.2	E	2496	4.4	F	1249	11.8	E
		Northeast		956	7.3	F	611	16.7	D	1269	1.5	F	665	14.2	E
		Southeast		870	23.1	D	910	19.1	D	861	17.5	D	709	25.0	C
		Southwest		1280	9.9	E	1403	8.9	E	1875	2.6	F	1303	9.6	E
	Crosswalk	West		677	17.6	D	640	20.1	D	1167	10.9	E	731	17.5	D
		North		685	15.8	D	455	25.6	C	1062	10.2	E	408	29.9	C
		East		255	62.9	A	151	101.1	A	167	90.1	A	216	69.1	A
		South		550	19.9	D	563	18.5	D	628	15.6	D	443	24.1	C
6th Avenue & 33rd Street	Sidewalk	West	South	1426	13.6	E	991	9.4	D	1463	13.9	E	579	5.5	C
			North	329	3.1	C	248	2.3	B	410	3.8	C	236	2.2	B
		North	West	1084	6.8	D	1558	9.8	D	2044	12.9	E	1805	11.4	E
		South	West	605	3.7	C	735	4.5	C	1057	6.4	D	558	3.4	C
	Corner	Northwest		1658	25.4	C	1659	25.7	C	2420	13.5	E	1632	26.9	C
		Southwest		1832	9.1	E	2118	9.9	E	2633	6.7	F	1677	13.3	E
	Crosswalk	West		1049	14.1	E	1246	10.5	E	1845	5.7	F	1240	11.0	E
		North		583	21.1	D	371	36.2	C	523	25.5	C	371	36.2	C
		South		691	17.4	D	633	18.0	D	713	15.6	D	397	29.6	C
Broadway & 34th Street	Sidewalk	West	South	1047	5.1	C	1227	5.9	C	1945	9.4	D	1322	6.4	D
			North	990	5.0	C	751	3.8	C	1177	6.0	C	662	3.3	C
		North	West	763	3.7	C	813	4.0	C	1169	5.7	C	762	3.7	C
		South	West	1084	5.6	C	1558	8.0	D	2044	10.5	D	1805	9.3	D
	Corner	Northwest		2115	24.9	C	2209	21.8	D	3109	11.5	E	2684	16.4	D
		Southwest		1877	25.0	C	2722	15.6	D	3459	12.4	E	2680	16.1	D
	Crosswalk	West		743	32.9	C	1175	18.0	D	1514	11.8	E	1228	16.5	D
		North		1213	18.0	D	977	26.3	C	1386	18.3	D	1277	19.2	D
		South		846	29.7	C	1068	20.8	D	1458	13.9	E	1098	20.5	D
Broadway & 33rd Street	Corner	Northeast		1289	24.5	C	1440	17.5	D	1543	14.4	E	1141	25.0	C
		Southeast		1353	19.8	D	1327	17.8	D	1517	12.6	E	952	27.6	C
	Crosswalk	North		626	14.2	E	558	18.7	D	736	14.4	E	423	25.7	C
		East		543	24.5	C	771	16.6	D	692	18.6	D	626	21.0	D
		South		632	25.2	C	437	34.5	C	679	19.7	D	287	55.1	B
6th Avenue & 34th Street	Corner	Northeast		1603	29.4	C	2230	15.7	D	2711	11.0	E	2317	14.5	E
		Southeast		1711	22.4	D	2407	12.0	E	2784	7.7	F	2396	12.6	E
	Crosswalk	North		579	14.6	E	864	10.4	E	1061	8.3	E	1081	8.0	F
		East		776	25.2	C	1118	17.1	D	1266	15.0	D	1155	16.4	D
		South		757	12.8	E	1086	7.3	F	1333	5.2	F	1065	7.7	F

2014 Future with the Proposed Project - Multi-Tenant Scenario - Pedestrian LOS Analysis

Location				AM			MD			PM			SAT		
				Peak 15 Volume	PFM / SFP	LOS	Peak 15 Volume	PFM / SFP	LOS	Peak 15 Volume	PFM / SFP	LOS	Peak 15 Volume	PFM / SFP	LOS
8th Avenue & 31st Street	Sidewalk	West	South	196	1.8	B	184	1.7	B	277	2.6	B	94	0.9	B
			North	98	1.2	B	58	0.7	B	88	1.0	B	52	0.6	B
		North	West	222	2.1	B	217	2.1	B	316	3.0	C	172	1.6	B
			East	352	1.2	B	284	1.0	B	340	1.2	B	235	0.8	B
		East	North	78	0.2	A	60	0.2	A	96	0.3	A	172	0.5	B
			South	319	3.3	C	362	3.7	C	490	5.0	C	84	0.9	B
		South	East	92	0.9	B	176	1.7	B	281	2.7	B	247	2.4	B
			West	221	2.1	B	238	2.2	B	324	3.0	C	195	1.8	B
	Corner	Northwest		506	34.6	C	387	46.1	B	534	32.8	C	559	30.5	C
		Northeast		577	144.3	A	531	160.3	A	839	99.4	A	319	273.9	A
		Southeast		528	29.1	C	560	25.4	C	833	12.7	E	357	44.4	B
		Southwest		376	25.1	C	469	18.4	D	574	13.1	E	618	9.0	E
	Crosswalk	West		227	44.3	B	250	40.1	B	287	31.7	C	463	19.3	D
		North		136	102.0	A	75	175.4	A	160	85.3	A	75	178.5	A
		East		404	33.1	C	374	34.5	C	576	20.6	D	192	70.6	A
		South		118	123.5	A	168	85.7	A	235	59.1	B	140	104.4	A
8th Avenue & 33rd Street	Sidewalk	West	South	328	4.2	C	134	1.7	B	470	6.0	D	91	1.2	B
			North	273	3.4	C	216	2.7	B	353	4.4	C	207	2.6	B
		North	West	473	5.8	C	413	5.1	C	688	8.5	D	227	2.8	B
			East	660	4.2	C	359	2.3	B	1104	7.0	D	424	2.7	B
		East	North	64	0.4	A	227	1.3	B	109	0.6	B	229	1.3	B
			South	114	0.4	A	123	0.4	A	264	0.9	B	464	1.7	B
		South	East	222	1.9	B	180	1.5	B	276	2.3	B	470	4.0	C
			West	381	3.8	C	275	2.7	B	439	4.4	C	224	2.2	B
	Corner	Northwest		625	24.7	C	491	33.0	C	576	26.1	C	372	45.6	B
		Northeast		865	84.1	A	704	99.7	A	1104	56.1	B	828	83.3	A
		Southeast		599	72.2	A	576	81.3	A	1121	40.9	B	963	45.6	B
		Southwest		402	39.4	C	340	46.5	B	544	26.3	C	473	30.2	C
	Crosswalk	West		236	36.7	C	212	42.2	B	279	26.1	C	194	46.3	B
		North		295	60.2	A	201	87.1	A	193	90.4	A	121	148.4	A
		East		447	24.3	C	440	27.9	C	846	14.1	E	636	17.6	D
		South		108	204.4	A	112	196.1	A	214	101.7	A	259	84.5	A
8th Avenue & 34th Street	Sidewalk	West	South	447	4.3	C	355	3.4	C	563	5.4	C	404	3.9	C
			North	400	2.0	B	399	2.0	B	448	2.3	B	209	1.1	B
		North	West	487	4.9	C	586	5.9	C	527	5.3	C	257	2.6	B
			East	869	8.2	D	753	7.1	D	955	9.0	D	476	4.5	C
		East	North	338	2.3	B	489	3.3	C	477	3.2	C	506	3.4	C
			South	276	1.9	B	282	2.0	B	361	2.5	B	263	1.8	B
		South	East	366	2.5	B	307	2.1	B	824	5.6	C	354	2.4	B
			West	380	4.6	C	310	3.8	C	565	6.8	D	655	7.9	D
	Corner	Northwest		1020	39.2	C	974	40.1	B	881	43.0	B	1222	26.0	C
		Northeast		1265	28.3	C	1361	27.2	C	1660	19.0	D	1134	35.9	C
		Southeast		1308	64.3	A	2120	35.5	C	1730	46.7	B	468	198.1	A
		Southwest		1241	20.4	D	1973	11.0	E	1288	22.1	D	715	45.1	B
	Crosswalk	West		521	20.2	D	494	20.9	D	440	22.7	D	497	19.2	D
		North		420	58.0	B	309	78.2	A	377	61.9	A	672	32.1	C
		East		651	21.3	D	708	19.5	D	938	14.7	E	285	53.5	B
		South		624	40.8	B	1399	15.8	D	771	31.3	C	166	164.8	A

Location				AM			MD			PM			SAT		
				Peak 15 Volume	PFM / SFP	LOS	Peak 15 Volume	PFM / SFP	LOS	Peak 15 Volume	PFM / SFP	LOS	Peak 15 Volume	PFM / SFP	LOS
7th Avenue & 31st Street	Sidewalk	West	South	115	1.2	B	100	1.0	B	153	1.6	B	90	0.9	B
			North	168	0.5	B	224	0.7	B	247	0.8	B	429	1.3	B
		North	West	1241	4.1	C	916	3.0	C	1217	4.0	C	1256	4.1	C
			East	786	2.4	B	967	3.0	C	1159	3.6	C	565	1.8	B
		East	North	242	1.5	B	299	1.8	B	320	1.9	B	247	1.5	B
			South	418	2.6	B	354	2.2	B	395	2.4	B	212	1.3	B
		South	East	723	2.7	B	892	3.3	C	953	3.6	C	513	1.9	B
			West	899	5.1	C	788	4.5	C	1105	6.3	D	528	3.0	C
	Corner	Northwest		1565	49.3	B	1022	89.4	A	1700	54.9	B	1271	70.7	A
		Northeast		1553	23.8	D	1416	26.6	C	1460	25.5	C	906	46.1	B
		Southeast		1073	30.6	C	1247	22.9	D	1175	21.5	D	702	46.5	B
		Southwest		1299	16.8	D	800	26.9	C	1509	7.4	F	790	28.5	C
	Crosswalk	West		859	13.2	E	575	22.4	D	1162	10.9	E	634	20.9	D
		North		660	15.7	D	369	33.0	C	424	29.8	C	291	41.6	B
		East		722	19.9	D	858	14.0	E	815	14.0	E	480	29.1	C
		South		299	36.7	C	174	63.0	A	303	33.7	C	123	91.1	A
7th Avenue & 32nd Street	Sidewalk	North	West	893	3.0	B	1505	5.0	C	1314	4.4	C	1691	5.6	C
			East	1030	2.7	B	2326	6.1	D	1879	4.9	C	1455	3.8	C
		East	North	1089	9.9	D	1048	9.6	D	1210	11.0	E	632	5.8	C
			South	564	5.5	C	550	5.4	C	678	6.6	D	283	2.8	B
		South	East	786	2.0	B	967	2.5	B	1159	3.0	B	565	1.4	B
			West	1223	4.5	C	911	3.4	C	1193	4.4	C	1252	4.6	C
	Corner	Northeast		1514	91.4	A	2264	55.3	B	2745	40.8	B	2122	59.6	B
		Southeast		907	50.6	B	1000	41.1	B	1814	13.9	E	1376	26.7	C
	Crosswalk	North		946	5.9	F	790	8.8	E	983	7.8	F	1231	4.7	F
		East		337	73.4	A	661	33.4	C	1199	15.3	D	352	68.7	A
		South		517	15.4	D	169	45.3	B	553	11.7	E	890	7.9	F
7th Avenue & 33rd Street	Sidewalk	West	South	273	1.0	B	337	1.3	B	540	2.0	B	621	2.3	B
			North	351	2.3	B	387	2.5	B	420	2.7	B	480	3.1	C
		North	West	1217	5.2	C	928	4.0	C	1411	6.0	D	774	3.3	C
			East	669	3.4	C	1411	7.2	D	1357	7.0	D	1325	6.8	D
		East	North	489	5.2	C	523	5.5	C	685	7.2	D	452	4.8	C
			South	916	5.9	C	1217	7.8	D	1238	7.9	D	914	5.9	C
		South	East	814	2.1	B	2375	6.2	D	1669	4.3	C	1560	4.1	C
			West	893	1.8	B	1505	3.1	C	1314	2.7	B	1691	3.5	C
	Corner	Northwest		1408	72.1	A	1108	92.1	A	1696	58.2	B	1240	79.7	A
		Northeast		1150	6.2	F	1785	3.6	F	1960	1.2	F	1912	4.6	F
		Southeast		1095	129.7	A	2916	43.5	B	2339	55.3	B	2754	47.5	B
		Southwest		1424	79.3	A	1753	61.8	A	1987	58.3	B	2075	48.7	B
	Crosswalk	West		929	24.2	C	727	30.0	C	1214	14.1	E	747	32.1	C
		North		375	14.6	E	349	16.2	D	429	13.2	E	449	11.3	E
		East		558	43.7	B	1103	18.0	D	1164	17.9	D	1193	15.6	D
		South		381	18.3	D	950	6.0	F	673	8.7	E	958	6.5	F
7th Avenue & 34th Street	Sidewalk	West	South	539	2.6	B	731	3.5	C	934	4.5	C	539	2.6	B
			North	650	2.7	B	1048	4.3	C	1149	4.7	C	1161	4.8	C
		North	West	1751	8.2	D	1403	6.5	D	2398	11.2	E	1005	4.7	C
			East	1280	5.4	C	894	3.8	C	1389	5.9	C	740	3.1	C
		East	North	946	4.7	C	729	3.7	C	1131	5.7	C	646	3.2	C
			South	960	3.7	C	1155	4.5	C	1765	6.8	D	1240	4.8	C
		South	East	669	3.1	C	1411	6.6	D	1357	6.3	D	1325	6.2	D
			West	1189	5.0	C	901	3.8	C	1359	5.7	C	751	3.2	C
	Corner	Northwest		3671	9.9	E	2636	13.4	E	4604	4.0	F	1845	19.3	D
		Northeast		1870	25.0	C	1970	19.5	D	2350	14.1	E	1819	23.5	D
		Southeast		2483	15.5	D	2050	16.3	D	2760	9.1	E	2501	15.4	D
		Southwest		3951	12.8	E	2518	35.6	C	4169	21.1	D	1723	55.4	B
	Crosswalk	West		2131	16.9	D	1279	25.1	C	2459	10.3	E	830	40.6	B
		North		1058	16.3	D	958	19.7	D	1018	18.5	D	923	19.6	D
		East		675	30.6	C	873	24.5	C	1193	17.6	D	799	26.9	C
		South		1733	11.0	E	1110	15.4	D	1545	9.9	E	768	23.9	D

Location				AM			MD			PM			SAT		
				Peak 15 Volume	PFM / SFP	LOS	Peak 15 Volume	PFM / SFP	LOS	Peak 15 Volume	PFM / SFP	LOS	Peak 15 Volume	PFM / SFP	LOS
6th Avenue & 31st Street	Sidewalk	West	South	405	3.9	C	347	3.3	C	378	3.6	C	204	1.9	B
			North	243	2.8	B	300	3.5	C	322	3.7	C	249	2.9	B
		North	West	674	4.4	C	900	5.9	C	1107	7.3	D	697	4.6	C
			East	329	1.5	B	494	2.2	B	562	2.5	B	368	1.7	B
		East	North	290	3.1	C	193	2.1	B	288	3.1	C	138	1.5	B
			South	265	1.7	B	169	1.1	B	324	2.1	B	137	0.9	B
		South	East	311	1.8	B	448	2.7	B	533	3.2	C	365	2.2	B
			West	624	5.2	C	779	6.5	D	900	7.5	D	633	5.3	C
	Corner	Northwest		934	15.8	D	928	19.5	D	1293	12.6	E	788	22.0	D
		Northeast		538	29.7	C	791	19.6	D	714	22.5	D	512	33.0	C
		Southeast		536	31.6	C	737	17.7	D	693	16.7	D	504	29.7	C
		Southwest		1013	18.4	D	1004	17.5	D	1265	11.2	E	807	25.1	C
	Crosswalk	West		585	15.9	D	492	20.7	D	933	10.2	E	481	21.2	D
		North		244	49.8	B	259	46.9	B	233	53.4	B	201	59.8	B
		East		246	47.3	B	385	26.6	C	412	23.3	D	281	38.9	C
		South		263	53.3	B	327	40.9	B	255	52.1	B	196	69.5	A
6th Avenue & 32nd Street	Sidewalk	West	South	504	3.1	C	506	3.1	C	577	3.5	C	250	1.5	B
			North	1363	13.0	E	1267	12.1	E	1402	13.4	E	682	6.5	D
		North	West	611	3.7	C	1074	6.5	D	1120	6.8	D	965	5.8	C
			East	115	5.1	C	102	4.5	C	190	8.4	D	80	3.5	C
		East	North	602	4.6	C	530	4.1	C	866	6.7	D	389	3.0	B
			South	623	5.9	C	585	5.5	C	687	6.5	D	369	3.5	C
		South	East	327	2.3	B	490	3.4	C	559	3.9	C	365	2.5	B
			West	750	5.7	C	936	7.1	D	1236	9.3	D	734	5.5	C
	Corner	Northwest		1496	5.3	F	1779	7.7	F	2587	4.0	F	1688	8.6	E
		Northeast		927	8.0	F	635	15.7	D	1353	0.7	F	693	13.2	E
		Southeast		862	23.5	D	922	18.7	D	864	17.3	D	723	24.3	C
		Southwest		1271	10.0	E	1415	8.8	E	1878	2.6	F	1317	9.4	E
	Crosswalk	West		675	17.6	D	644	20.0	D	1168	10.9	E	735	17.4	D
		North		659	16.4	D	475	24.4	C	1145	9.4	E	432	28.1	C
		East		253	63.6	A	154	98.6	A	168	89.4	A	220	67.7	A
		South		544	20.2	D	571	18.2	D	630	15.5	D	452	23.5	D
6th Avenue & 33rd Street	Sidewalk	West	South	1390	13.2	E	1393	13.3	E	1548	14.7	E	995	9.5	D
			North	323	3.0	C	253	2.4	B	412	3.8	C	243	2.3	B
		North	West	1073	6.8	D	1568	9.9	D	2049	12.9	E	1817	11.5	E
		South	West	593	3.6	C	1120	6.8	D	1061	6.4	D	955	5.8	C
	Corner	Northwest		1646	19.4	D	1669	19.3	D	2424	9.2	E	1644	20.4	D
		Southwest		1809	0.7	F	2508	2.2	F	2714	0.6	F	2080	3.2	F
	Crosswalk	West		1043	11.7	E	1251	8.4	E	1848	4.5	F	1246	8.9	E
		North		583	21.1	D	371	36.2	C	523	25.5	C	371	36.2	C
		South		685	17.6	D	633	18.0	D	788	13.9	E	397	29.6	C
Broadway & 34th Street	Sidewalk	West	South	1047	5.1	C	1227	5.9	C	1945	9.4	D	1322	6.4	D
			North	990	5.0	C	751	3.8	C	1177	6.0	C	662	3.3	C
		North	West	763	3.7	C	813	4.0	C	1169	5.7	C	762	3.7	C
		South	West	1073	5.5	C	1568	8.0	D	2049	10.5	D	1817	9.3	D
	Corner	Northwest		2115	24.9	C	2209	21.8	D	3109	11.5	E	2684	16.4	D
		Southwest		1866	25.1	C	2732	15.6	D	3463	12.4	E	2692	16.0	D
	Crosswalk	West		743	32.9	C	1175	18.0	D	1514	11.8	E	1228	16.5	D
		North		1213	18.0	D	977	26.3	C	1386	18.3	D	1277	19.2	D
		South		846	29.7	C	1068	20.8	D	1458	13.9	E	1098	20.5	D
Broadway & 33rd Street	Corner	Northeast		1289	12.3	E	1440	6.5	F	1543	4.2	F	1141	11.2	E
		Southeast		1347	8.9	E	1328	6.6	F	1593	2.2	F	953	11.9	E
	Crosswalk	North		626	14.2	E	558	18.7	D	736	14.4	E	423	25.7	C
		East		543	24.5	C	771	16.6	D	692	18.6	D	626	21.0	D
		South		626	25.5	C	438	34.4	C	754	17.4	D	289	54.8	B
6th Avenue & 34th Street	Corner	Northeast		1603	29.4	C	2230	15.7	D	2711	11.0	E	2317	14.5	E
		Southeast		1711	22.4	D	2407	12.0	E	2784	7.7	F	2396	12.6	E
	Crosswalk	North		579	14.6	E	864	10.4	E	1061	8.3	E	1081	8.0	F
		East		776	21.4	D	1118	14.6	E	1266	12.8	E	1155	14.0	E
		South		757	12.8	E	1086	7.3	F	1333	5.2	F	1065	7.7	F

2014 Future with the Proposed Project - Multi-Tenant Office Scenario - Pedestrian Impact Assessment

Location				AM				MD				PM				SAT			
				Volume	PFM / SFP	LOS	Impact?	Volume	PFM / SFP	LOS	Impact?	Volume	PFM / SFP	LOS	Impact?	Volume	PFM / SFP	LOS	Impact?
8th Avenue & 31st Street	Sidewalk	West	South	0	0.0	B	No	0	0.0	B	No	0	0.0	B	No	0	0.0	B	No
			North	1	0.0	B	No	0	0.0	B	No	0	0.0	B	No	0	0.0	B	No
		North	West	0	0.0	B	No	0	0.0	B	No	0	0.0	C	No	1	0.0	B	No
			East	1	0.0	B	No	1	0.0	B	No	1	0.0	B	No	0	0.0	B	No
		East	North	2	0.0	A	No	3	0.0	A	No	4	0.0	A	No	3	0.0	B	No
			South	2	0.0	C	No	2	0.0	C	No	3	0.0	C	No	2	0.1	B	No
		South	East	4	0.0	B	No	5	0.1	B	No	7	0.1	B	No	4	0.1	B	No
			West	1	0.0	B	No	1	0.0	B	No	1	0.0	C	No	0	0.0	B	No
	Corner	Northwest		1	-0.1	C	No	1	-0.2	B	No	1	-0.1	C	No	0	-0.1	C	No
		Northeast		4	-0.8	A	No	4	-1.3	A	No	5	-0.7	A	No	3	-2.5	A	No
		Southeast		4	-0.3	C	No	6	-0.3	C	No	8	-0.2	E	No	5	-0.7	B	No
		Southwest		1	-0.2	C	No	1	-0.1	D	No	1	-0.1	E	No	1	0.0	E	No
	Crosswalk	West		0	-0.2	B	No	0	-0.1	B	No	1	-0.1	C	No	0	-0.1	D	No
		North		1	-0.5	A	No	0	-5.0	A	No	0	-0.3	A	No	0	-0.5	A	No
		East		3	-0.3	C	No	3	-0.4	C	No	5	-0.2	D	No	3	-1.1	A	No
		South		1	-0.7	A	No	0	-0.2	A	No	0	-0.2	B	No	0	-0.1	A	No
8th Avenue & 33rd Street	Sidewalk	West	South	6	0.1	C	No	14	0.2	B	No	74	0.9	C-->D	No	16	0.2	B	No
			North	4	0.0	C	No	5	0.0	B	No	6	0.0	C	No	5	0.1	B	No
		North	West	2	0.0	C	No	3	0.0	C	No	5	0.1	D	No	6	0.1	B	No
			East	7	0.0	C	No	11	0.1	B	No	15	0.1	D	No	17	0.1	B	No
		East	North	8	0.1	A	No	16	0.1	B	No	20	0.1	B	No	19	0.1	B	No
			South	20	0.1	A	No	32	0.1	A	No	110	0.3	B	No	40	0.2	B	No
		South	East	11	0.1	B	No	14	0.1	B	No	29	0.2	B	No	16	0.2	C	No
			West	0	0.0	C	No	1	0.0	B	No	0	0.0	C	No	1	0.0	B	No
	Corner	Northwest		6	-0.4	C	No	7	-0.6	C	No	10	-0.6	C	No	11	-1.7	B	No
		Northeast		11	-1.1	A	No	18	-2.7	A	No	25	-1.4	B	No	27	-3.1	A	No
		Southeast		21	-2.5	A	No	32	-5.0	A	No	110	-5.1	B	No	41	-2.2	B	No
		Southwest		12	-1.5	B-->C	No	17	-2.8	B	No	79	-5.4	C	No	21	-1.7	C	No
	Crosswalk	West		2	-0.5	C	No	1	-0.3	B	No	2	-0.2	C	No	2	-2.9	B	No
		North		4	-0.9	A	No	6	-2.7	A	No	8	-4.0	A	No	9	-12.0	A	No
		East		1	-0.1	C	No	2	-0.1	C	No	3	-0.1	E	No	6	-0.2	D	No
		South		9	-17.9	A	No	16	-31.9	A	No	76	-59.3	A	No	18	-6.8	A	No
8th Avenue & 34th Street	Sidewalk	West	South	1	0.0	C	No	2	0.0	C	No	2	0.0	C	No	2	0.0	C	No
			North	10	0.0	B	No	9	0.0	B	No	14	0.1	B	No	13	0.1	B	No
		North	West	5	0.0	C	No	8	0.1	C	No	11	0.1	C	No	11	0.1	B	No
			East	9	0.1	D	No	15	0.2	D	No	20	0.2	D	No	18	0.2	C	No
		East	North	6	0.1	B	No	8	0.1	C	No	11	0.1	C	No	8	0.1	C	No
			South	10	0.1	B	No	12	0.1	B	No	16	0.1	B	No	14	0.1	B	No
		South	East	6	0.1	B	No	11	0.1	B	No	15	0.1	C	No	17	0.1	B	No
			West	2	0.0	C	No	3	0.1	C	No	5	0.0	D	No	5	0.0	D	No
	Corner	Northwest		14	-0.8	C	No	17	-0.9	B	No	24	-1.4	B	No	24	-0.8	C	No
		Northeast		22	-0.6	C	No	31	-0.8	C	No	41	-0.6	D	No	38	-1.6	C	No
		Southeast		16	-1.0	A	No	24	-0.5	C	No	31	-1.2	B	No	31	-14.7	A	No
		Southwest		10	-0.2	D	No	13	-0.2	E	No	20	-0.5	D	No	19	-1.6	B	No
	Crosswalk	West		6	-0.3	D	No	8	-0.4	D	No	10	-0.6	D	No	11	-0.5	D	No
		North		9	-1.3	B	No	9	-2.7	A	No	14	-2.4	A	No	13	-0.7	C	No
		East		12	-0.4	D	No	18	-0.5	D	No	23	-0.5	D-->E	No	23	-4.9	B	No
		South		5	-0.4	B	No	6	-0.1	D	No	9	-0.4	C	No	8	-8.7	A	No

Location				AM				MD				PM				SAT			
				Volume	PFM / SFP	LOS	Impact?	Volume	PFM / SFP	LOS	Impact?	Volume	PFM / SFP	LOS	Impact?	Volume	PFM / SFP	LOS	Impact?
7th Avenue & 31st Street	Sidewalk	West	South	1	0.0	B	No	2	0.0	B	No	3	0.1	B	No	2	0.0	B	No
			North	2	0.0	B	No	2	0.0	B	No	4	0.0	B	No	3	0.0	B	No
		North	West	16	0.1	C	No	8	0.0	B-->C	No	22	0.1	C	No	4	0.0	C	No
			East	-5	-0.1	B	No	3	0.0	C	No	145	0.4	C	No	8	0.1	B	No
		East	North	0	0.0	B	No	0	0.0	B	No	0	0.0	B	No	0	0.0	B	No
			South	9	0.1	B	No	7	0.1	B	No	9	0.0	B	No	8	0.1	B	No
		South	East	-15	-0.1	B	No	-4	-0.1	C	No	131	0.5	C	No	-1	0.0	B	No
			West	1	0.0	C	No	1	0.0	C	No	1	0.0	D	No	0	0.0	C	No
	Corner	Northwest		9	-0.4	B	No	7	-0.6	A	No	14	-0.5	B	No	5	-0.3	A	No
		Northeast		-5	0.1	D	No	3	-0.1	C	No	145	-3.8	C	No	8	-0.4	B	No
		Southeast		-9	0.2	C	No	2	-0.1	D	No	139	-3.9	C-->D	No	7	-0.6	B	No
		Southwest		3	-0.1	D	No	4	-0.1	C	No	4	0.0	F	No	3	-0.1	C	No
	Crosswalk	West		4	-0.1	E	No	4	-1.1	D	No	5	0.0	E	No	3	0.0	D	No
		North		3	-0.1	D	No	0	0.0	C	No	6	-0.4	C	No	1	-0.2	B	No
		East		-7	0.2	D	No	3	0.0	E	No	140	-3.6	D-->E	No	7	-0.5	C	No
		South		-2	0.2	C	No	-1	0.3	A	No	-1	0.1	C	No	1	-0.2	A	No
7th Avenue & 32nd Street	Sidewalk	North	West	-517	-1.7	C-->B	No	49	0.1	C	No	-533	-1.8	D-->C	No	104	0.3	C	No
			East	-46	-0.8	C-->B	No	774	1.1	C-->D	No	384	0.1	C	No	795	1.7	B-->C	No
		East	North	-427	-3.9	E-->D	No	94	0.9	D	No	-203	-1.9	E	No	332	3.1	B-->C	No
			South	-112	-1.1	D-->C	No	-90	-0.9	D-->C	No	-95	-1.0	D	No	-19	-0.2	B	No
		South	East	-5	0.0	B	No	3	0.0	B	No	145	0.4	B	No	8	0.0	B	No
			West	12	0.0	C	No	7	0.1	C	No	15	0.0	C	No	4	0.0	C	No
	Corner	Northeast		-478	73.3	D-->A	No	490	38.7	D-->B	No	76	36.6	F-->B	No	707	37.0	D-->B	No
		Southeast		-380	15.3	C-->B	No	-289	9.3	C-->B	No	-181	1.0	E	No	-72	1.2	C	No
	Crosswalk	North		-359	2.0	F	No	135	-2.0	E	Impact	-193	1.7	F	No	255	-1.5	F	Impact
		East		-121	21.3	B-->A	No	-64	3.4	C	No	80	-1.4	D	No	18	-4.1	A	No
		South		-256	5.1	E-->D	No	-221	25.7	D-->B	No	-258	3.7	E	No	-88	0.7	F	No
7th Avenue & 33rd Street	Sidewalk	West	South	21	0.1	B	No	31	0.2	B	No	110	0.4	B	No	41	0.1	B	No
			North	16	0.1	B	No	21	0.1	B	No	27	0.1	B	No	36	0.2	B-->C	No
		North	West	-98	-0.4	C	No	-15	0.0	C	No	-83	-0.4	D	No	-2	0.0	C	No
			East	-106	-0.6	C	No	67	0.3	D	No	79	0.4	D	No	59	0.3	D	No
		East	North	-17	-0.2	C	No	111	1.1	C	No	53	0.5	D	No	59	0.6	C	No
			South	-142	-0.9	D-->C	No	436	2.8	C-->D	No	200	1.2	D	No	552	3.6	B-->C	No
		South	East	-40	-0.7	B	No	845	1.2	C-->D	No	476	0.4	C	No	891	1.9	B-->C	No
			West	-517	-1.1	B	No	49	0.1	B-->C	No	-533	-1.1	C-->B	No	104	0.2	C	No
	Corner	Northwest		-282	13.4	B-->A	No	-119	9.1	A	No	-273	9.1	B	No	-85	5.4	A	No
		Northeast		-150	0.6	F	No	118	-0.4	F	No	129	-0.2	F	No	136	-0.8	F	No
		Southeast		-347	102.5	C-->A	No	726	29.3	E-->B	No	234	41.3	E-->B	No	867	28.3	D-->B	No
		Southwest		-412	21.3	B-->A	No	174	-9.5	A	No	-293	8.6	B	No	269	-10.3	B	No
	Crosswalk	West		-206	4.6	D-->C	No	-118	4.1	C	No	-233	2.8	E	No	-91	3.9	C	No
		North		-63	2.7	E	No	8	-0.4	D	No	-24	1.0	E	No	15	-0.3	E	No
		East		-169	12.6	C-->B	No	-27	0.6	D	No	28	-0.8	D	No	25	-0.3	D	No
		South		-202	6.6	E-->D	No	294	-3.4	E-->F	Impact	-57	0.7	E	No	362	-5.1	E-->F	Impact
7th Avenue & 34th Street	Sidewalk	West	South	10	0.0	B	No	13	0.0	C	No	16	0.1	C	No	14	0.1	B	No
			North	10	0.1	B	No	18	0.1	C	No	27	0.1	C	No	21	0.1	C	No
		North	West	20	0.1	D	No	35	0.1	D	No	32	0.2	E	No	34	0.2	C	No
			East	-71	-0.3	C	No	-53	-0.2	C	No	60	0.3	C	No	-55	-0.3	C	No
		East	North	-234	-1.2	C	No	-178	-0.8	C	No	-277	-1.4	D-->C	No	-156	-0.8	C	No
			South	-230	-0.9	C	No	-271	-1.0	C	No	-414	-1.6	D	No	-290	-1.1	C	No
		South	East	-106	-0.5	C	No	67	0.3	D	No	79	0.3	C-->D	No	59	0.3	C-->D	No
			West	-106	-0.5	C	No	-35	-0.1	C	No	-113	-0.5	D-->C	No	-24	-0.1	C	No
	Corner	Northwest		-68	0.4	E	No	0	0.1	E	No	-49	0.2	F	No	8	0.0	D	No
		Northeast		-220	2.9	D-->C	No	-132	1.4	D	No	-109	0.8	E	No	-129	1.9	D	No
		Southeast		-276	2.1	E-->D	No	-151	1.4	E-->D	No	-227	0.9	E	No	-170	1.3	E-->D	No
		Southwest		-79	0.6	E	No	-15	0.4	C	No	-81	0.7	D	No	-12	0.6	B	No
	Crosswalk	West		-16	0.1	D	No	34	-0.8	C	No	14	-0.1	E	No	40	-2.3	B	No
		North		-53	1.0	D	No	-35	0.8	D	No	-62	1.2	D	No	-33	0.8	D	No
		East		-114	5.2	C	No	-29	1.0	D-->C	No	27	-0.6	D	No	-36	1.3	C	No
		South		-65	0.5	E	No	-46	0.7	E-->D	No	-104	0.8	E	No	-55	1.7	D	No

Location				AM				MD				PM				SAT			
				Volume	PFM / SFP	LOS	Impact?	Volume	PFM / SFP	LOS	Impact?	Volume	PFM / SFP	LOS	Impact?	Volume	PFM / SFP	LOS	Impact?
6th Avenue & 31st Street	Sidewalk	West	South	0	0.0	C	No	0	0.0	C	No	0	0.0	C	No	0	0.0	B	No
			North	0	0.0	B	No	0	0.0	C	No	0	0.0	C	No	0	0.0	B	No
		North	West	0	0.0	C	No	0	0.0	C	No	0	0.0	D	No	0	0.0	C	No
			East	5	0.0	B	No	11	0.0	B	No	16	0.0	B	No	13	0.1	B	No
		East	North	0	0.0	C	No	0	0.0	B	No	0	0.0	C	No	0	0.0	B	No
			South	0	0.0	B	No	0	0.0	B	No	0	0.0	B	No	0	0.0	B	No
		South	East	0	0.0	B	No	0	0.0	B	No	0	0.0	C	No	0	0.0	B	No
			West	0	0.0	C	No	0	0.0	D	No	0	0.0	D	No	0	0.0	C	No
	Corner	Northwest		0	0.0	D	No	0	0.0	D	No	0	0.0	E	No	0	0.0	D	No
		Northeast		0	0.0	C	No	0	0.0	D	No	0	0.0	D	No	0	0.0	C	No
		Southeast		0	0.0	C	No	0	0.0	D	No	0	0.0	D	No	0	0.0	C	No
		Southwest		0	0.0	D	No	0	0.0	D	No	0	0.0	E	No	0	0.0	C	No
	Crosswalk	West		0	0.0	D	No	0	-0.8	D	No	0	0.0	E	No	0	0.0	D	No
		North		0	0.0	B	No	0	0.0	B	No	0	0.0	B	No	0	0.0	B	No
		East		0	0.0	B	No	0	0.0	C	No	0	0.0	D	No	0	0.0	C	No
		South		0	0.0	B	No	0	0.0	B	No	0	0.0	B	No	0	0.0	A	No
6th Avenue & 32nd Street	Sidewalk	West	South	-127	-0.7	C	No	-121	-0.7	C	No	-141	-0.8	C	No	-54	-0.3	B	No
			North	-100	-0.9	E	No	318	3.1	D-->E	No	47	0.5	E	No	384	3.7	B-->D	No
		North	West	-239	-1.4	C	No	47	0.3	D	No	-321	-1.9	D	No	125	0.7	C	No
			East	9	0.4	C	No	13	0.5	C	No	28	1.2	D	No	16	0.6	B-->C	No
		East	North	1	0.0	C	No	6	0.1	C	No	78	0.6	D	No	7	0.1	B	No
			South	6	0.1	C	No	6	0.0	C	No	8	0.1	D	No	8	0.1	C	No
		South	East	5	0.1	B	No	11	0.1	C	No	16	0.2	C	No	13	0.1	B	No
			West	0	0.0	C	No	0	0.0	D	No	0	0.0	D	No	0	0.0	C	No
	Corner	Northwest		-210	1.7	F	No	199	-0.1	F	No	-88	0.2	F	No	323	-1.7	E	Impact
		Northeast		-149	1.6	F	No	-124	3.7	E-->D	No	-56	0.7	F	No	-31	0.9	E	No
		Southeast		-87	2.8	D	No	-78	2.1	D	No	-88	2.4	E-->D	No	-25	1.0	D-->C	No
		Southwest		-120	2.0	F-->E	No	-109	1.4	F-->E	No	-125	0.5	F	No	-39	0.5	E	No
	Crosswalk	West		-78	2.0	D	No	-73	2.4	D	No	-85	1.0	E	No	-31	0.8	D	No
		North		-103	2.4	E-->D	No	-82	3.6	D-->C	No	-8	0.0	E	No	-15	1.1	C	No
		East		-45	11.2	B-->A	No	-42	22.6	A	No	-49	20.8	A	No	-17	5.0	A	No
		South		-42	1.5	D	No	-36	1.2	D	No	-40	1.2	E-->D	No	-9	0.5	D	No
6th Avenue & 33rd Street	Sidewalk	West	South	383	3.6	D-->E	No	613	5.9	D-->E	No	564	5.3	D-->E	No	632	6.0	C-->D	No
			North	-182	-1.7	C	No	-159	-1.4	C-->B	No	-219	-2.1	C	No	-149	-1.3	C-->B	No
		North	West	40	0.3	D	No	-36	-0.2	D	No	41	0.3	E	No	-33	-0.2	E	No
		South	West	-145	-0.9	C	No	122	0.7	D	No	-252	-1.6	D	No	142	0.9	C	No
	Corner	Northwest		96	-1.5	D	No	-46	0.6	D	No	82	-1.6	E	Impact	-40	0.8	D	No
		Southwest		247	-3.1	F	Impact	394	-0.8	F	No	308	-0.8	F	No	415	-1.6	F	Impact
	Crosswalk	West		158	-2.1	E	Impact	-16	0.2	E	No	120	-0.6	F	No	-13	0.3	E	No
		North		36	-1.6	D	No	26	-2.9	C	No	52	-3.0	C	No	26	-2.9	C	No
		South		106	-3.4	D	No	81	-2.9	D	No	207	-5.6	D-->E	No	82	-8.3	C	No
Broadway & 34th Street	Sidewalk	West	South	-132	-0.6	C	No	-196	-1.0	D-->C	No	-222	-1.1	D	No	-208	-1.0	D	No
			North	-189	-1.0	C	No	-163	-0.8	C	No	-231	-1.1	D-->C	No	-143	-0.8	C	No
		North	West	-52	-0.3	C	No	-67	-0.3	C	No	-83	-0.4	D-->C	No	-68	-0.3	C	No
		South	West	40	0.2	C	No	-36	-0.2	D	No	41	0.2	D	No	-33	-0.2	D	No
	Corner	Northwest		-151	2.0	D-->C	No	-159	2.2	D	No	-214	1.2	E	No	-151	1.3	D	No
		Southwest		-60	1.2	D-->C	No	-151	1.4	E-->D	No	-144	1.0	E	No	-155	1.4	E-->D	No
	Crosswalk	West		-42	2.0	C	No	-91	1.7	D	No	-88	0.8	E	No	-90	1.4	D	No
		North		-58	1.0	D	No	-32	1.0	C	No	-68	1.0	D	No	-29	0.5	D	No
		South		10	-0.4	C	No	1	0.0	D	No	3	0.0	E	No	-2	0.0	D	No
Broadway & 33rd Street	Corner	Northeast		107	-1.4	E	Impact	73	-0.8	F	No	137	-1.3	F	Impact	73	-1.3	E	Impact
		Southeast		177	-2.8	E	Impact	127	-1.7	E-->F	Impact	293	-2.6	F	Impact	129	-3.4	D-->E	No
	Crosswalk	North		37	-1.1	D-->E	No	26	-1.1	D	No	53	-1.4	D-->E	No	27	-2.0	C	No
		East		70	-4.8	C	No	46	-1.3	D	No	85	-3.2	D	No	45	-2.1	D	No
		South		106	-5.8	C	No	81	-8.8	B-->C	No	208	-7.8	C-->D	No	84	-24.0	A-->B	No
6th Avenue & 34th Street	Corner	Northeast		32	-0.5	C	No	21	-0.1	D	No	35	0.1	E	No	23	0.0	E	No
		Southeast		102	-1.9	C-->D	No	59	-0.5	E	No	111	-0.5	E-->F	No	55	-0.5	E	No
	Crosswalk	North		-61	1.7	E	No	-37	0.5	E	No	-74	0.7	F-->E	No	-34	0.3	F	No
		East		93	-3.7	C-->D	No	57	-1.0	D-->E	No	108	-1.5	E	Impact	57	-0.9	E	No
		South		10	-0.2	E	No	1	0.0	F	No	3	0.0	F	No	-1	0.0	F	No

2014 Future with the Proposed Project - Multi-Tenant Scenario Mitigated - Pedestrian LOS Analysis

Location				AM			MD			PM			SAT		
				Peak 15 Volume	PFM / SFP	LOS	Peak 15 Volume	PFM / SFP	LOS	Peak 15 Volume	PFM / SFP	LOS	Peak 15 Volume	PFM / SFP	LOS
8th Avenue & 31st Street	Sidewalk	West	South	196	1.8	B	184	1.7	B	277	2.6	B	94	0.9	B
			North	98	1.2	B	58	0.7	B	88	1.0	B	52	0.6	B
		North	West	222	2.1	B	217	2.1	B	316	3.0	C	172	1.6	B
			East	352	1.2	B	284	1.0	B	340	1.2	B	235	0.8	B
		East	North	78	0.2	A	60	0.2	A	96	0.3	A	172	0.5	B
			South	319	3.3	C	362	3.7	C	490	5.0	C	84	0.9	B
		South	East	92	0.9	B	176	1.7	B	281	2.7	B	247	2.4	B
			West	221	2.1	B	238	2.2	B	324	3.0	C	195	1.8	B
	Corner	Northwest		506	34.6	C	387	46.1	B	534	32.8	C	559	30.5	C
		Northeast		577	144.3	A	531	160.3	A	839	99.4	A	319	273.9	A
		Southeast		528	29.1	C	560	25.4	C	833	12.7	E	357	44.4	B
		Southwest		376	25.1	C	469	18.4	D	574	13.1	E	618	9.0	E
	Crosswalk	West		227	44.3	B	250	40.1	B	287	31.7	C	463	19.3	D
		North		136	102.0	A	75	175.4	A	160	85.3	A	75	178.5	A
		East		404	33.1	C	374	34.5	C	576	20.6	D	192	70.6	A
		South		118	123.5	A	168	85.7	A	235	59.1	B	140	104.4	A
8th Avenue & 33rd Street	Sidewalk	West	South	328	4.2	C	134	1.7	B	470	6.0	D	91	1.2	B
			North	273	3.4	C	216	2.7	B	353	4.4	C	207	2.6	B
		North	West	473	5.8	C	413	5.1	C	688	8.5	D	227	2.8	B
			East	660	4.2	C	359	2.3	B	1104	7.0	D	424	2.7	B
		East	North	64	0.4	A	227	1.3	B	109	0.6	B	229	1.3	B
			South	114	0.4	A	123	0.4	A	264	0.9	B	464	1.7	B
		South	East	222	1.9	B	180	1.5	B	276	2.3	B	470	4.0	C
			West	381	3.8	C	275	2.7	B	439	4.4	C	224	2.2	B
	Corner	Northwest		625	24.7	C	491	33.0	C	576	26.1	C	372	45.6	B
		Northeast		865	84.1	A	704	99.7	A	1104	56.1	B	828	83.3	A
		Southeast		599	72.2	A	576	81.3	A	1121	40.9	B	963	45.6	B
		Southwest		402	39.4	C	340	46.5	B	544	26.3	C	473	30.2	C
	Crosswalk	West		236	36.7	C	212	42.2	B	279	26.1	C	194	46.3	B
		North		295	60.2	A	201	87.1	A	193	90.4	A	121	148.4	A
		East		447	24.3	C	440	27.9	C	846	14.1	E	636	17.6	D
		South		108	204.4	A	112	196.1	A	214	101.7	A	259	84.5	A
8th Avenue & 34th Street	Sidewalk	West	South	447	4.3	C	355	3.4	C	563	5.4	C	404	3.9	C
			North	400	2.0	B	399	2.0	B	448	2.3	B	209	1.1	B
		North	West	487	4.9	C	586	5.9	C	527	5.3	C	257	2.6	B
			East	869	8.2	D	753	7.1	D	955	9.0	D	476	4.5	C
		East	North	338	2.3	B	489	3.3	C	477	3.2	C	506	3.4	C
			South	276	1.9	B	282	2.0	B	361	2.5	B	263	1.8	B
		South	East	366	2.5	B	307	2.1	B	824	5.6	C	354	2.4	B
			West	380	4.6	C	310	3.8	C	565	6.8	D	655	7.9	D
	Corner	Northwest		1020	39.2	C	974	40.1	B	881	43.0	B	1222	26.0	C
		Northeast		1265	28.3	C	1361	27.2	C	1660	19.0	D	1134	35.9	C
		Southeast		1308	64.3	A	2120	35.5	C	1730	46.7	B	468	198.1	A
		Southwest		1241	20.4	D	1973	11.0	E	1288	22.1	D	715	45.1	B
	Crosswalk	West		521	20.2	D	494	20.9	D	440	22.7	D	497	19.2	D
		North		420	58.0	B	309	78.2	A	377	61.9	A	672	32.1	C
		East		651	21.3	D	708	19.5	D	938	14.7	E	285	53.5	B
		South		624	40.8	B	1399	15.8	D	771	31.3	C	166	164.8	A

Location				AM			MD			PM			SAT		
				Peak 15 Volume	PFM / SFP	LOS	Peak 15 Volume	PFM / SFP	LOS	Peak 15 Volume	PFM / SFP	LOS	Peak 15 Volume	PFM / SFP	LOS
7th Avenue & 31st Street	Sidewalk	West	South	115	1.2	B	100	1.0	B	153	1.6	B	90	0.9	B
			North	168	0.5	B	224	0.7	B	247	0.8	B	429	1.3	B
		North	West	1241	4.1	C	916	3.0	C	1217	4.0	C	1256	4.1	C
			East	786	2.4	B	967	3.0	C	1159	3.6	C	565	1.8	B
		East	North	242	1.5	B	299	1.8	B	320	1.9	B	247	1.5	B
			South	418	2.6	B	354	2.2	B	395	2.4	B	212	1.3	B
		South	East	723	2.7	B	892	3.3	C	953	3.6	C	513	1.9	B
			West	899	5.1	C	788	4.5	C	1105	6.3	D	528	3.0	C
	Corner	Northwest		1565	49.3	B	1022	89.4	A	1700	54.9	B	1271	70.7	A
		Northeast		1553	23.8	D	1416	26.6	C	1460	25.5	C	906	46.1	B
		Southeast		1073	30.6	C	1247	22.9	D	1175	21.5	D	702	46.5	B
		Southwest		1299	16.8	D	800	26.9	C	1509	7.4	F	790	28.5	C
	Crosswalk	West		859	13.2	E	575	22.4	D	1162	10.9	E	634	20.9	D
		North		660	15.7	D	369	33.0	C	424	29.8	C	291	41.6	B
		East		722	19.9	D	858	14.0	E	815	14.0	E	480	29.1	C
		South		299	36.7	C	174	63.0	A	303	33.7	C	123	91.1	A
7th Avenue & 32nd Street	Sidewalk	North	West	893	3.0	B	1505	5.0	C	1314	4.4	C	1691	5.6	C
			East	1030	2.7	B	2326	6.1	D	1879	4.9	C	1455	3.8	C
		East	North	1089	9.9	D	1048	9.6	D	1210	11.0	E	632	5.8	C
			South	564	5.5	C	550	5.4	C	678	6.6	D	283	2.8	B
		South	East	786	2.0	B	967	2.5	B	1159	3.0	B	565	1.4	B
			West	1223	4.5	C	911	3.4	C	1193	4.4	C	1252	4.6	C
	Corner	Northeast		1514	91.4	A	2264	55.3	B	2745	40.8	B	2122	59.6	B
		Southeast		907	50.6	B	1000	41.1	B	1814	13.9	E	1376	26.7	C
	Crosswalk	North		946	6.6	F	790	9.6	E	983	8.5	E	1231	5.2	F
		East		337	73.4	A	661	33.4	C	1199	15.3	D	352	68.7	A
		South		517	15.4	D	169	45.3	B	553	11.7	E	890	7.9	F
7th Avenue & 33rd Street	Sidewalk	West	South	273	1.0	B	337	1.3	B	540	2.0	B	621	2.3	B
			North	351	2.3	B	387	2.5	B	420	2.7	B	480	3.1	C
		North	West	1217	5.2	C	928	4.0	C	1411	6.0	D	774	3.3	C
			East	669	3.4	C	1411	7.2	D	1357	7.0	D	1325	6.8	D
		East	North	489	5.2	C	523	5.5	C	685	7.2	D	452	4.8	C
			South	916	5.9	C	1217	7.8	D	1238	7.9	D	914	5.9	C
		South	East	814	2.1	B	2375	6.2	D	1669	4.3	C	1560	4.1	C
			West	893	1.8	B	1505	3.1	C	1314	2.7	B	1691	3.5	C
	Corner	Northwest		1408	72.1	A	1108	92.1	A	1696	58.2	B	1240	79.7	A
		Northeast		1150	6.2	F	1785	3.6	F	1960	1.2	F	1912	4.6	F
		Southeast		1095	129.7	A	2916	43.5	B	2339	55.3	B	2754	47.5	B
		Southwest		1424	79.3	A	1753	61.8	A	1987	58.3	B	2075	48.7	B
	Crosswalk	West		929	24.2	C	727	30.0	C	1214	14.1	E	747	32.1	C
		North		375	14.6	E	349	16.2	D	429	13.2	E	449	11.3	E
		East		558	43.7	B	1103	18.0	D	1164	17.9	D	1193	15.6	D
		South		381	24.3	C	950	8.2	E	673	11.8	E	958	8.8	E
7th Avenue & 34th Street	Sidewalk	West	South	539	2.6	B	731	3.5	C	934	4.5	C	539	2.6	B
			North	650	2.7	B	1048	4.3	C	1149	4.7	C	1161	4.8	C
		North	West	1751	8.2	D	1403	6.5	D	2398	11.2	E	1005	4.7	C
			East	1280	5.4	C	894	3.8	C	1389	5.9	C	740	3.1	C
		East	North	946	4.7	C	729	3.7	C	1131	5.7	C	646	3.2	C
			South	960	3.7	C	1155	4.5	C	1765	6.8	D	1240	4.8	C
		South	East	669	3.1	C	1411	6.6	D	1357	6.3	D	1325	6.2	D
			West	1189	5.0	C	901	3.8	C	1359	5.7	C	751	3.2	C
	Corner	Northwest		3671	9.9	E	2636	13.4	E	4604	4.0	F	1845	19.3	D
		Northeast		1870	25.0	C	1970	19.5	D	2350	14.1	E	1819	23.5	D
		Southeast		2483	15.5	D	2050	16.3	D	2760	9.1	E	2501	15.4	D
		Southwest		3951	12.8	E	2518	35.6	C	4169	21.1	D	1723	55.4	B
	Crosswalk	West		2131	16.9	D	1279	25.1	C	2459	10.3	E	830	40.6	B
		North		1058	16.3	D	958	19.7	D	1018	18.5	D	923	19.6	D
		East		675	30.6	C	873	24.5	C	1193	17.6	D	799	26.9	C
		South		1733	11.0	E	1110	15.4	D	1545	9.9	E	768	23.9	D

Location				AM			MD			PM			SAT		
				Peak 15 Volume	PFM / SFP	LOS	Peak 15 Volume	PFM / SFP	LOS	Peak 15 Volume	PFM / SFP	LOS	Peak 15 Volume	PFM / SFP	LOS
6th Avenue & 31st Street	Sidewalk	West	South	405	3.9	C	347	3.3	C	378	3.6	C	204	1.9	B
			North	243	2.8	B	300	3.5	C	322	3.7	C	249	2.9	B
		North	West	674	4.4	C	900	5.9	C	1107	7.3	D	697	4.6	C
			East	329	1.5	B	494	2.2	B	562	2.5	B	368	1.7	B
		East	North	290	3.1	C	193	2.1	B	288	3.1	C	138	1.5	B
			South	265	1.7	B	169	1.1	B	324	2.1	B	137	0.9	B
		South	East	311	1.8	B	448	2.7	B	533	3.2	C	365	2.2	B
			West	624	5.2	C	779	6.5	D	900	7.5	D	633	5.3	C
	Corner	Northwest		934	15.8	D	928	19.5	D	1293	12.6	E	788	22.0	D
		Northeast		538	29.7	C	791	19.6	D	714	22.5	D	512	33.0	C
		Southeast		536	31.6	C	737	17.7	D	693	16.7	D	504	29.7	C
		Southwest		1013	18.4	D	1004	17.5	D	1265	11.2	E	807	25.1	C
	Crosswalk	West		585	15.9	D	492	20.7	D	933	10.2	E	481	21.2	D
		North		244	49.8	B	259	46.9	B	233	53.4	B	201	59.8	B
		East		246	47.3	B	385	26.6	C	412	23.3	D	281	38.9	C
		South		263	53.3	B	327	40.9	B	255	52.1	B	196	69.5	A
6th Avenue & 32nd Street	Sidewalk	West	South	504	3.1	C	506	3.1	C	577	3.5	C	250	1.5	B
			North	1363	13.0	E	1267	12.1	E	1402	13.4	E	682	6.5	D
		North	West	611	3.7	C	1074	6.5	D	1120	6.8	D	965	5.8	C
			East	115	5.1	C	102	4.5	C	190	8.4	D	80	3.5	C
		East	North	602	4.6	C	530	4.1	C	866	6.7	D	389	3.0	B
			South	623	5.9	C	585	5.5	C	687	6.5	D	369	3.5	C
		South	East	327	2.3	B	490	3.4	C	559	3.9	C	365	2.5	B
			West	750	5.7	C	936	7.1	D	1236	9.3	D	734	5.5	C
	Corner	Northwest		1496	15.7	D	1779	16.4	D	2587	10.0	E	1688	17.8	D
		Northeast		927	8.0	F	635	15.7	D	1353	0.7	F	693	13.2	E
		Southeast		862	23.5	D	922	18.7	D	864	17.3	D	723	24.3	C
		Southwest		1271	10.0	E	1415	8.8	E	1878	2.6	F	1317	9.4	E
	Crosswalk	West		675	17.6	D	644	20.0	D	1168	10.9	E	735	17.4	D
		North		659	16.4	D	475	24.4	C	1145	9.4	E	432	28.1	C
		East		253	63.6	A	154	98.6	A	168	89.4	A	220	67.7	A
		South		544	20.2	D	571	18.2	D	630	15.5	D	452	23.5	D
6th Avenue & 33rd Street	Sidewalk	West	South	1390	13.2	E	1393	13.3	E	1548	14.7	E	995	9.5	D
			North	323	3.0	C	253	2.4	B	412	3.8	C	243	2.3	B
		North	West	1073	6.8	D	1568	9.9	D	2049	12.9	E	1817	11.5	E
		South	West	593	3.6	C	1120	6.8	D	1061	6.4	D	955	5.8	C
	Corner	Northwest		1646	25.7	C	1669	25.5	C	2424	13.4	E	1644	26.7	C
		Southwest		1809	9.3	E	2508	8.4	E	2714	6.3	F	2080	10.7	E
	Crosswalk	West		1043	14.3	E	1251	10.4	E	1848	5.7	F	1246	10.9	E
		North		583	21.1	D	371	36.2	C	523	25.5	C	371	36.2	C
		South		685	17.6	D	633	18.0	D	788	13.9	E	397	29.6	C
Broadway & 34th Street	Sidewalk	West	South	1047	5.1	C	1227	5.9	C	1945	9.4	D	1322	6.4	D
			North	990	5.0	C	751	3.8	C	1177	6.0	C	662	3.3	C
		North	West	763	3.7	C	813	4.0	C	1169	5.7	C	762	3.7	C
		South	West	1073	5.5	C	1568	8.0	D	2049	10.5	D	1817	9.3	D
	Corner	Northwest		2115	24.9	C	2209	21.8	D	3109	11.5	E	2684	16.4	D
		Southwest		1866	25.1	C	2732	15.6	D	3463	12.4	E	2692	16.0	D
	Crosswalk	West		743	32.9	C	1175	18.0	D	1514	11.8	E	1228	16.5	D
		North		1213	18.0	D	977	26.3	C	1386	18.3	D	1277	19.2	D
		South		846	29.7	C	1068	20.8	D	1458	13.9	E	1098	20.5	D
Broadway & 33rd Street	Corner	Northeast		1289	24.5	C	1440	17.5	D	1543	14.4	E	1141	25.0	C
		Southeast		1347	19.9	D	1328	17.7	D	1593	11.5	E	953	27.5	C
	Crosswalk	North		626	14.2	E	558	18.7	D	736	14.4	E	423	25.7	C
		East		543	24.5	C	771	16.6	D	692	18.6	D	626	21.0	D
		South		626	25.5	C	438	34.4	C	754	17.4	D	289	54.8	B
6th Avenue & 34th Street	Corner	Northeast		1603	29.4	C	2230	15.7	D	2711	11.0	E	2317	14.5	E
		Southeast		1711	22.4	D	2407	12.0	E	2784	7.7	F	2396	12.6	E
	Crosswalk	North		579	14.6	E	864	10.4	E	1061	8.3	E	1081	8.0	F
		East		776	25.2	C	1118	17.1	D	1266	15.0	D	1155	16.4	D
		South		757	12.8	E	1086	7.3	F	1333	5.2	F	1065	7.7	F

2008 Existing - Pedestrian LOS
AM Peak 15 Minutes

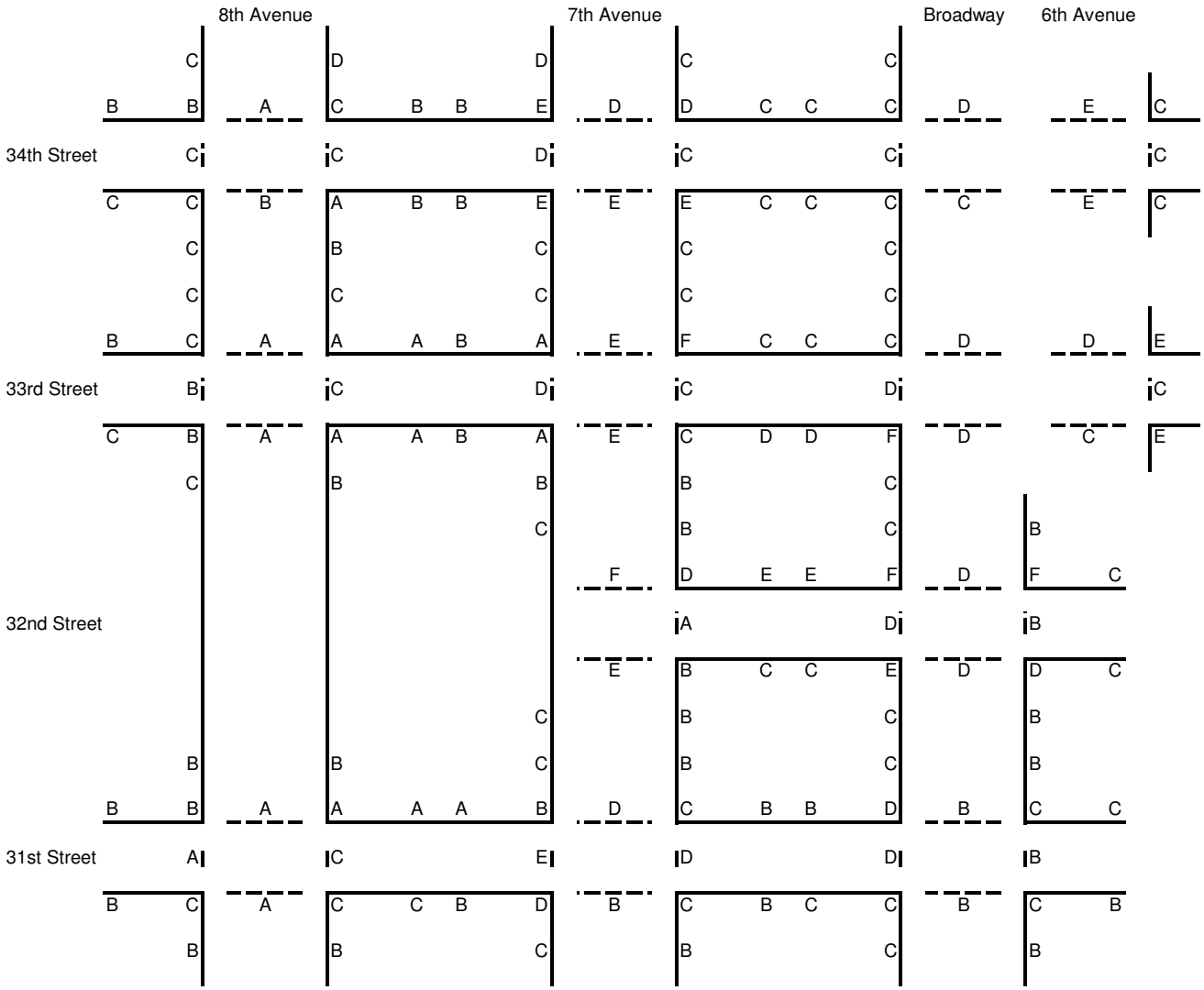

2008 Existing - Pedestrian LOS
MD Peak 15 Minutes

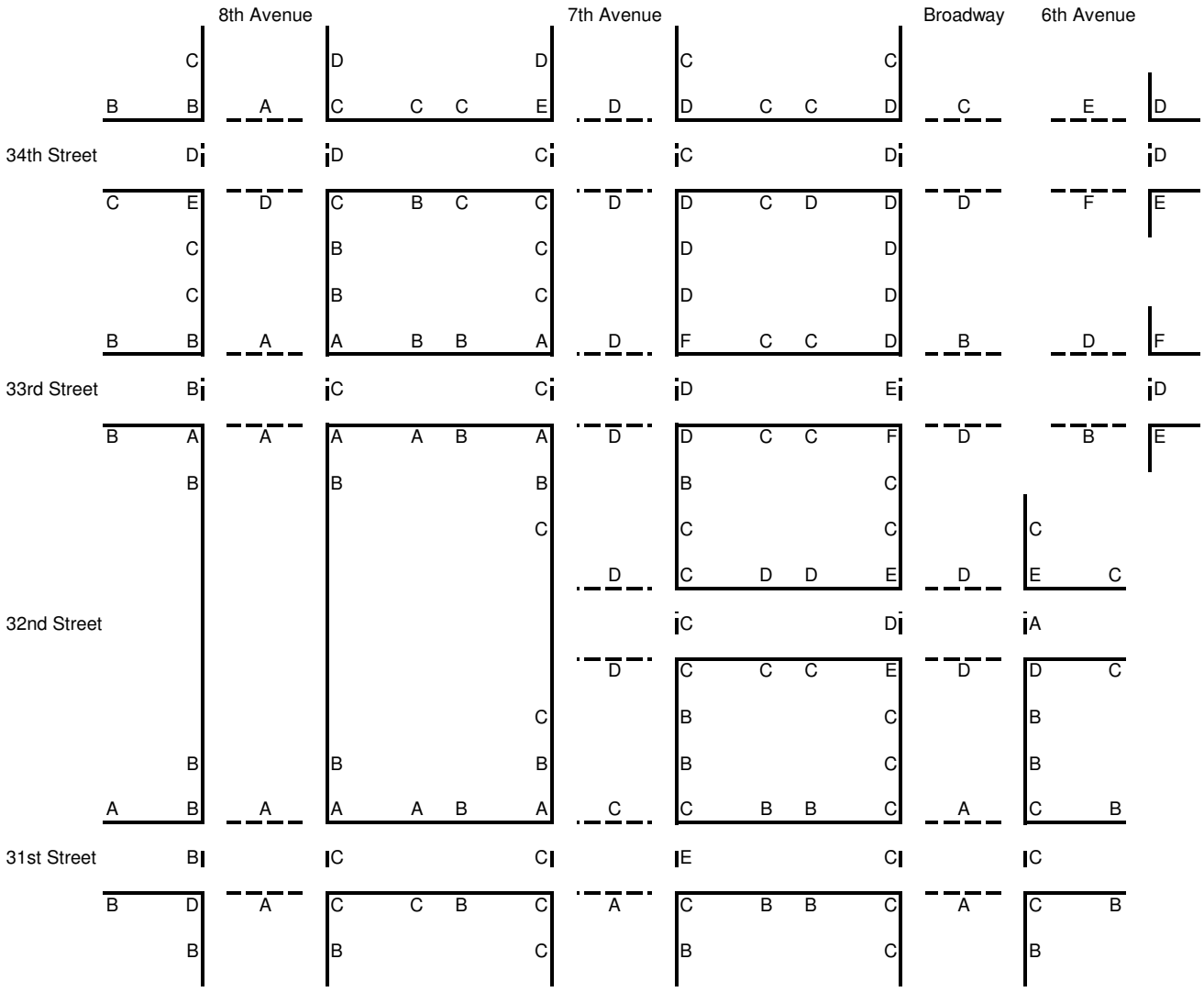

2008 Existing - Pedestrian LOS
PM Peak 15 Minutes

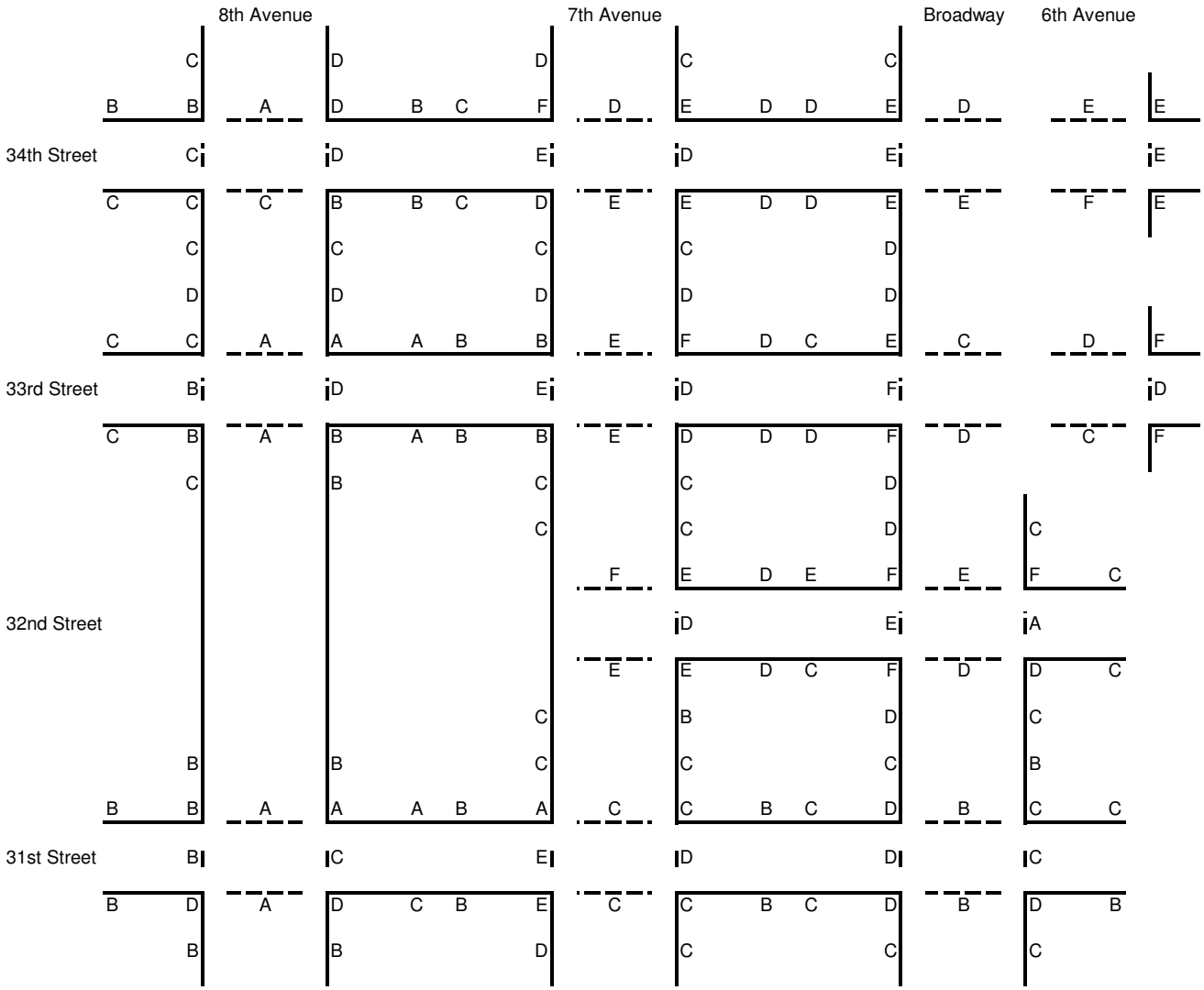

2008 Existing - Pedestrian LOS
SAT Peak 15 Minutes

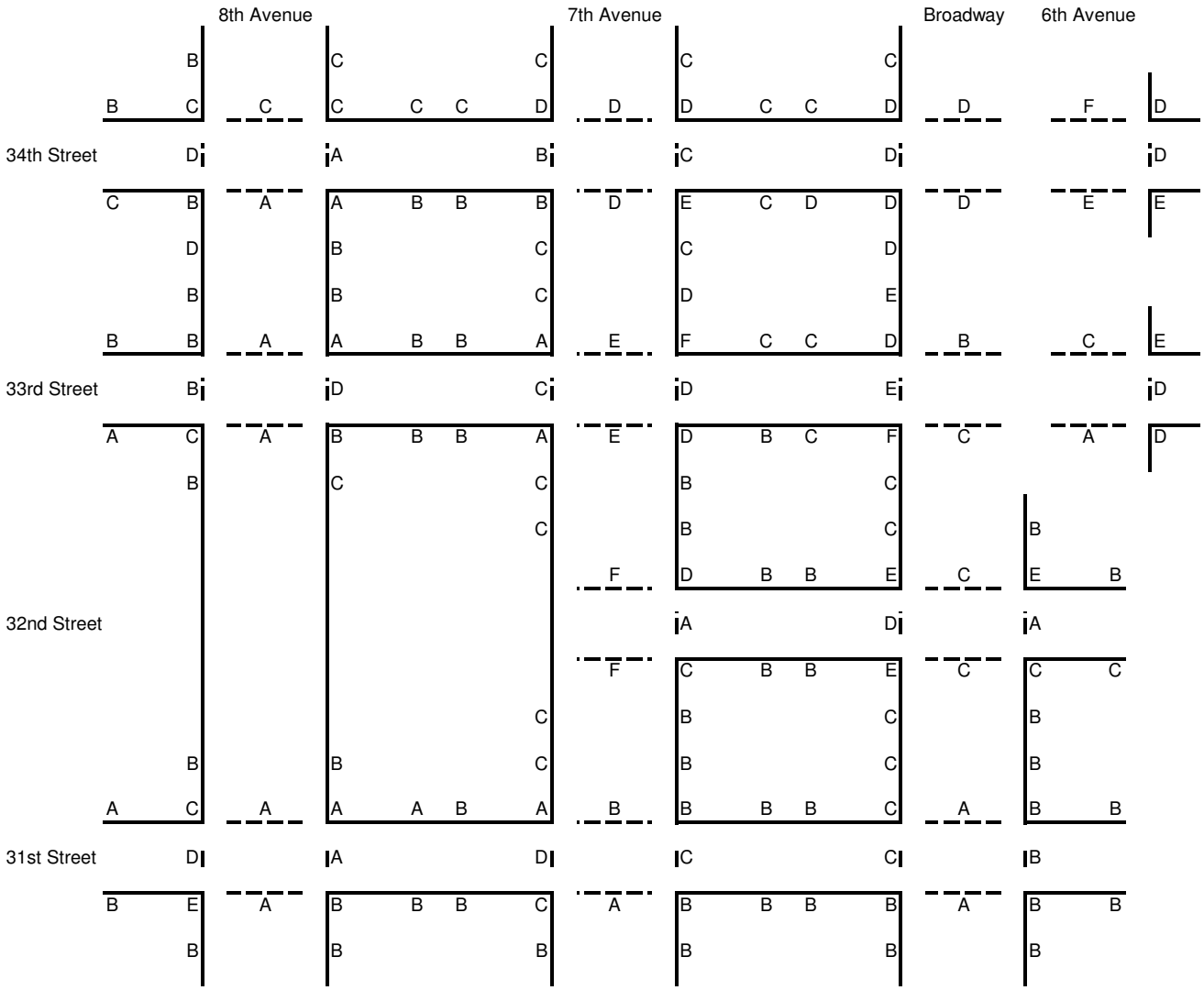

2014 No Action - Pedestrian LOS
AM Peak 15 Minutes

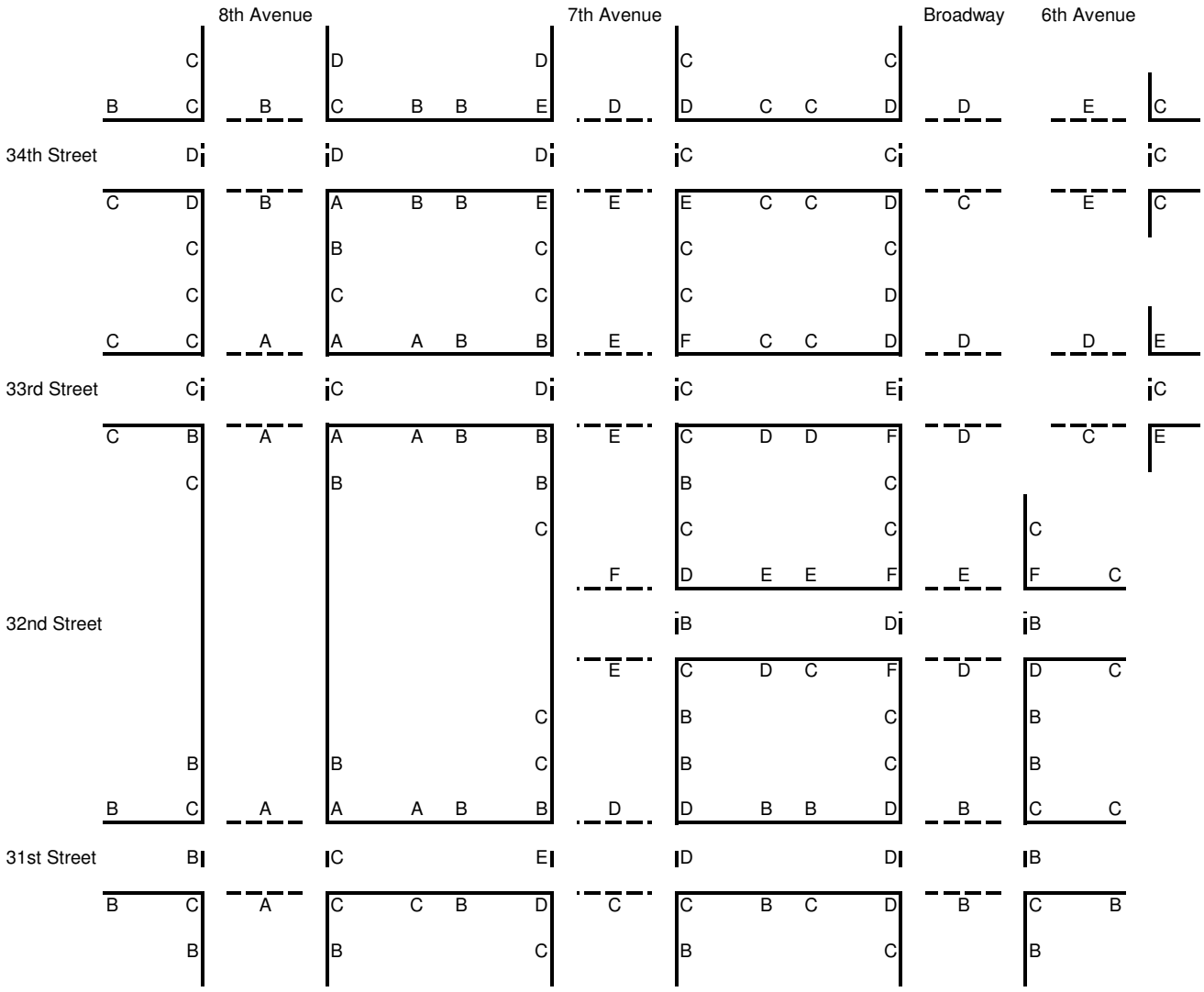

2014 No Action - Pedestrian LOS
MD Peak 15 Minutes

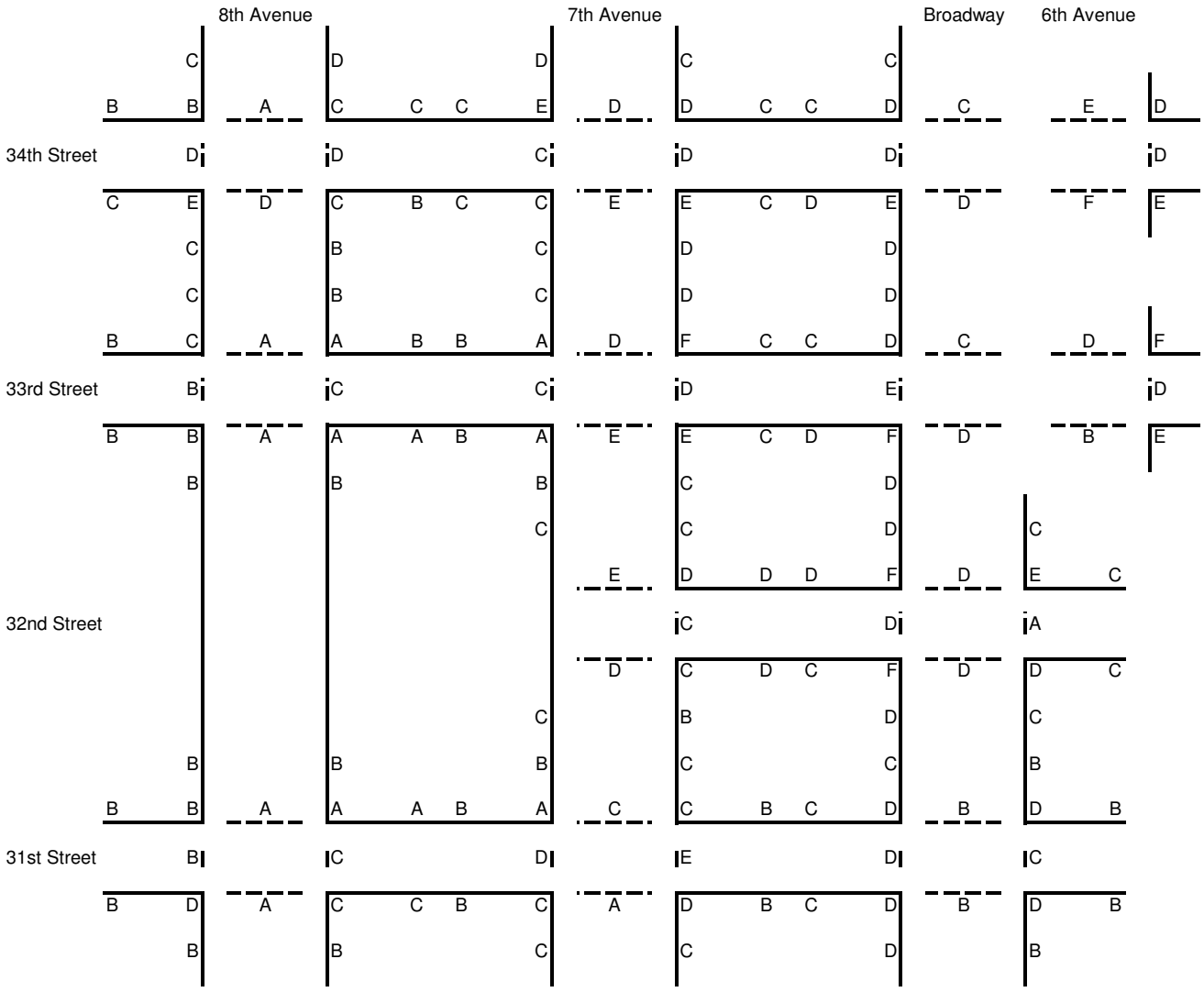

2014 No Action - Pedestrian LOS
PM Peak 15 Minutes

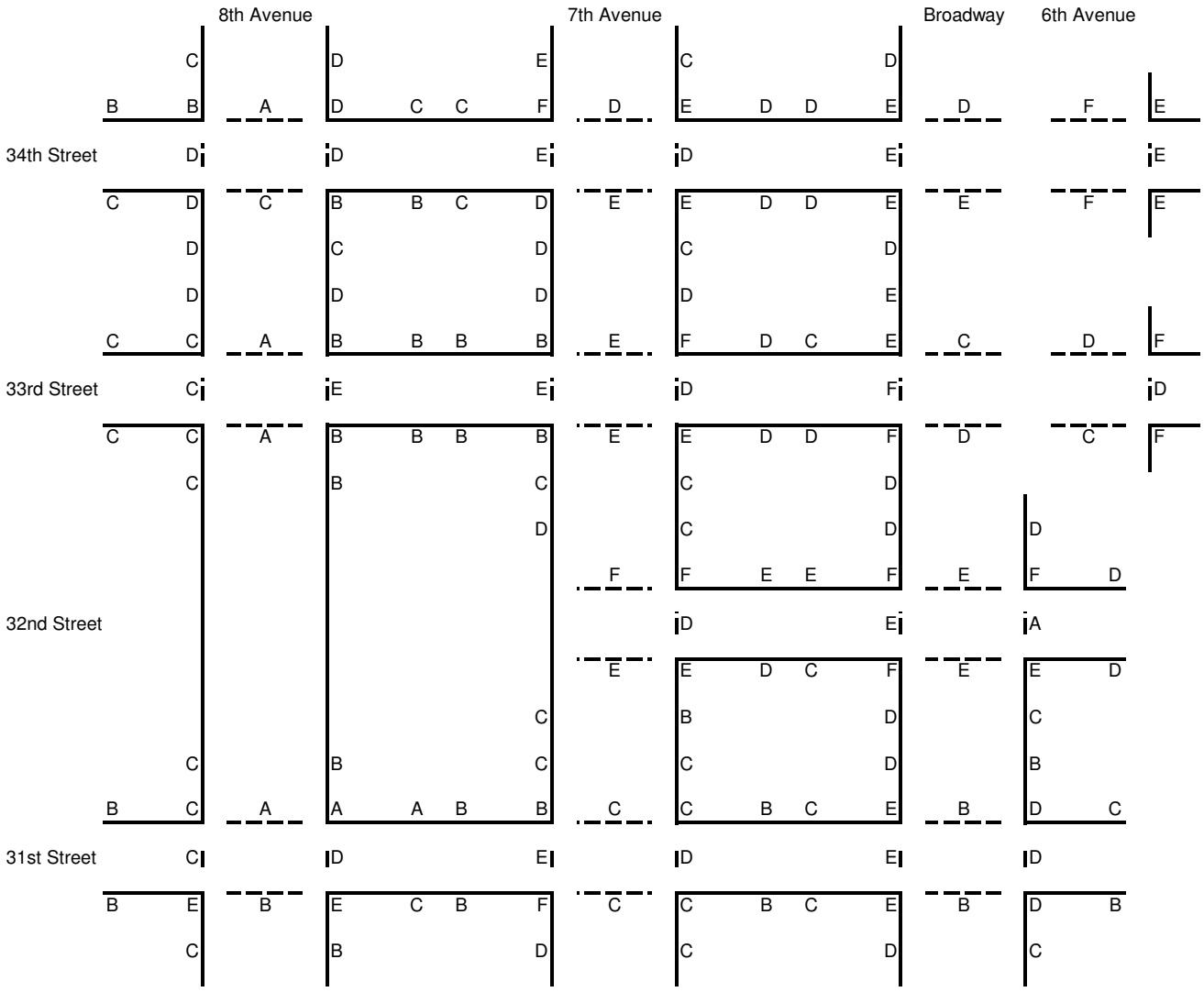

2014 No Action - Pedestrian LOS
SAT Peak 15 Minutes

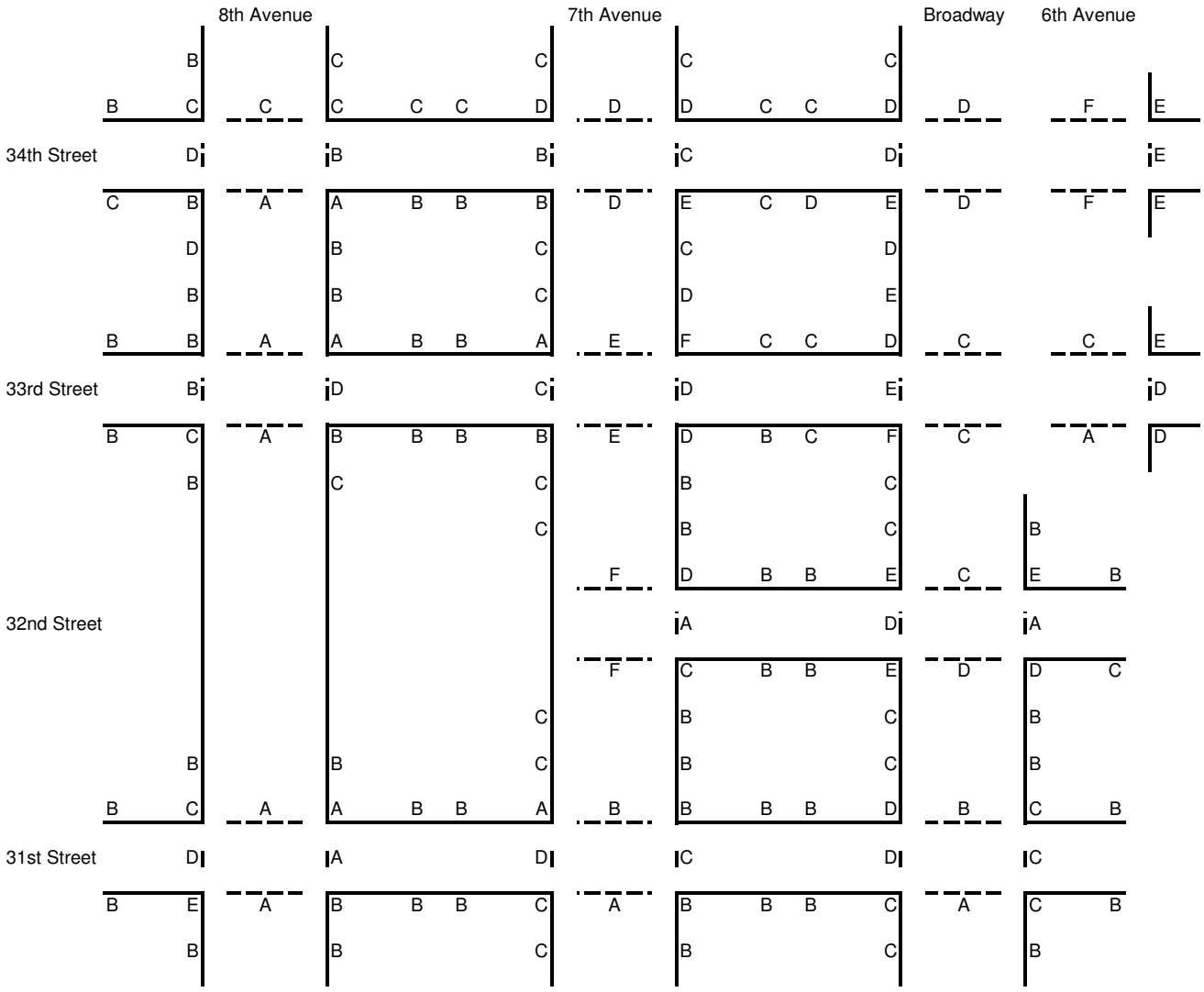

2014 Future with the Proposed Project - Single-Tenant Office Scenario - Pedestrian LOS
AM Peak 15 Minutes

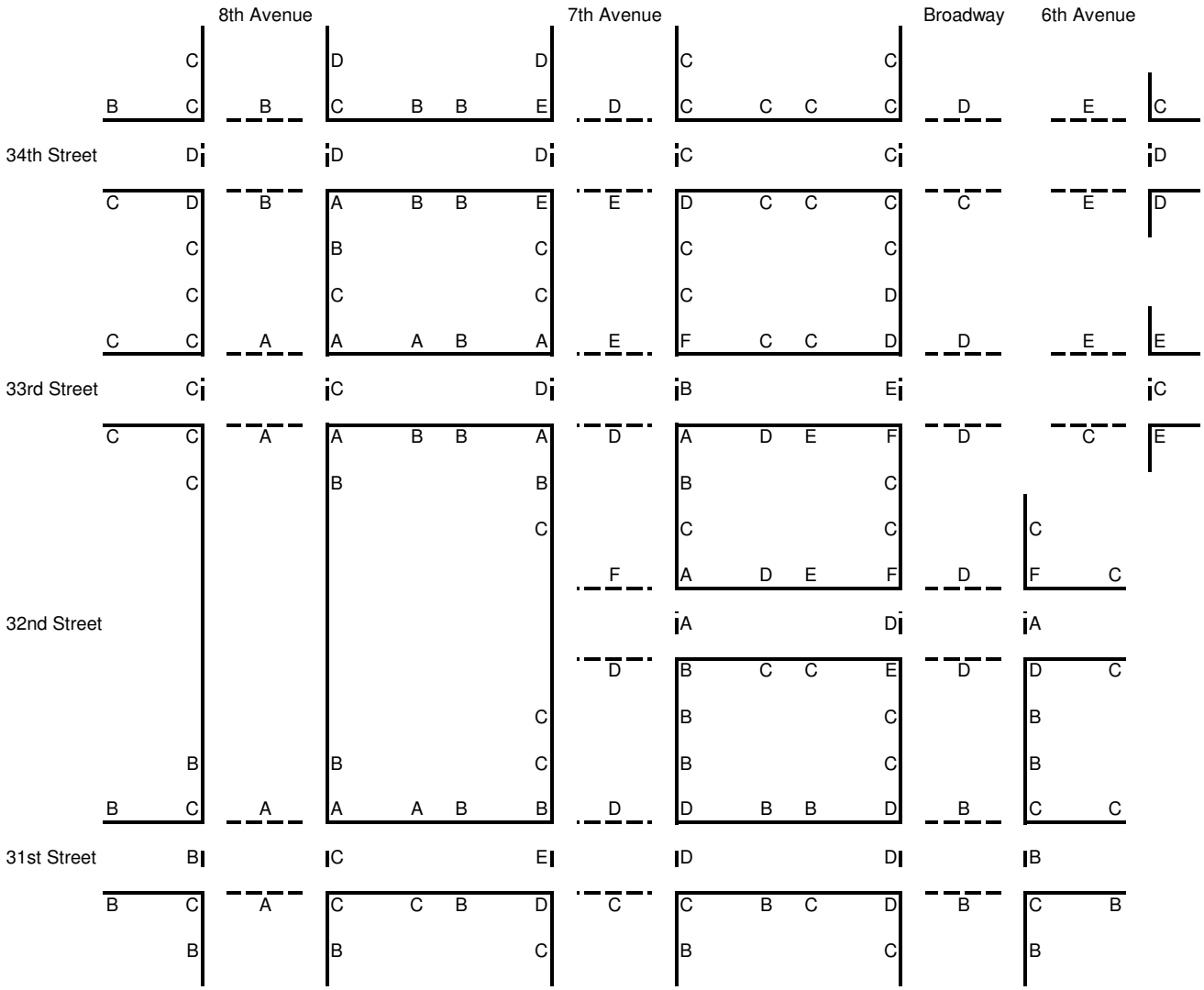

2014 Future with the Proposed Project - Single-Tenant Office Scenario - Pedestrian LOS
MD Peak 15 Minutes

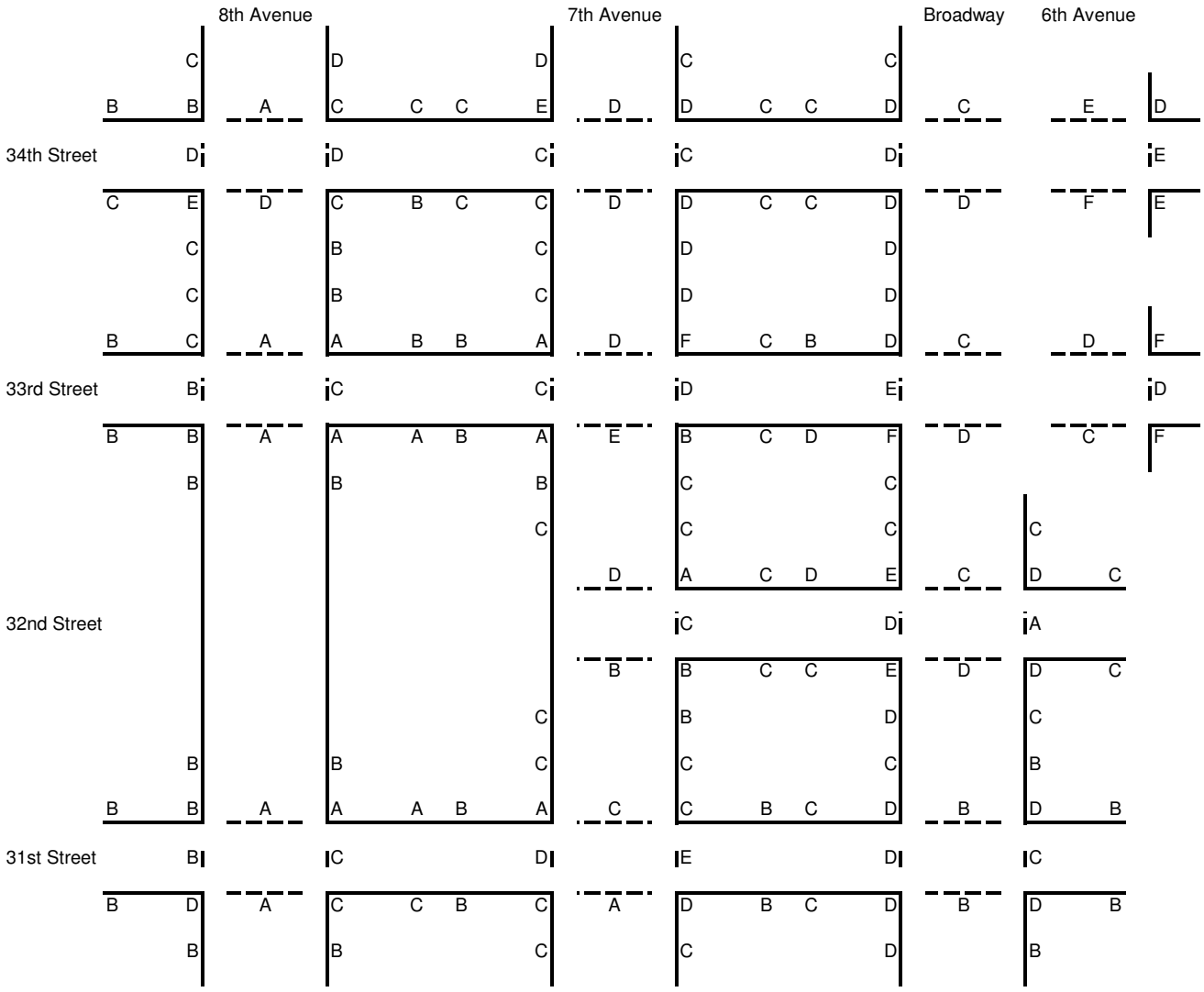

2014 Future with the Proposed Project - Single-Tenant Office Scenario - Pedestrian LOS
PM Peak 15 Minutes

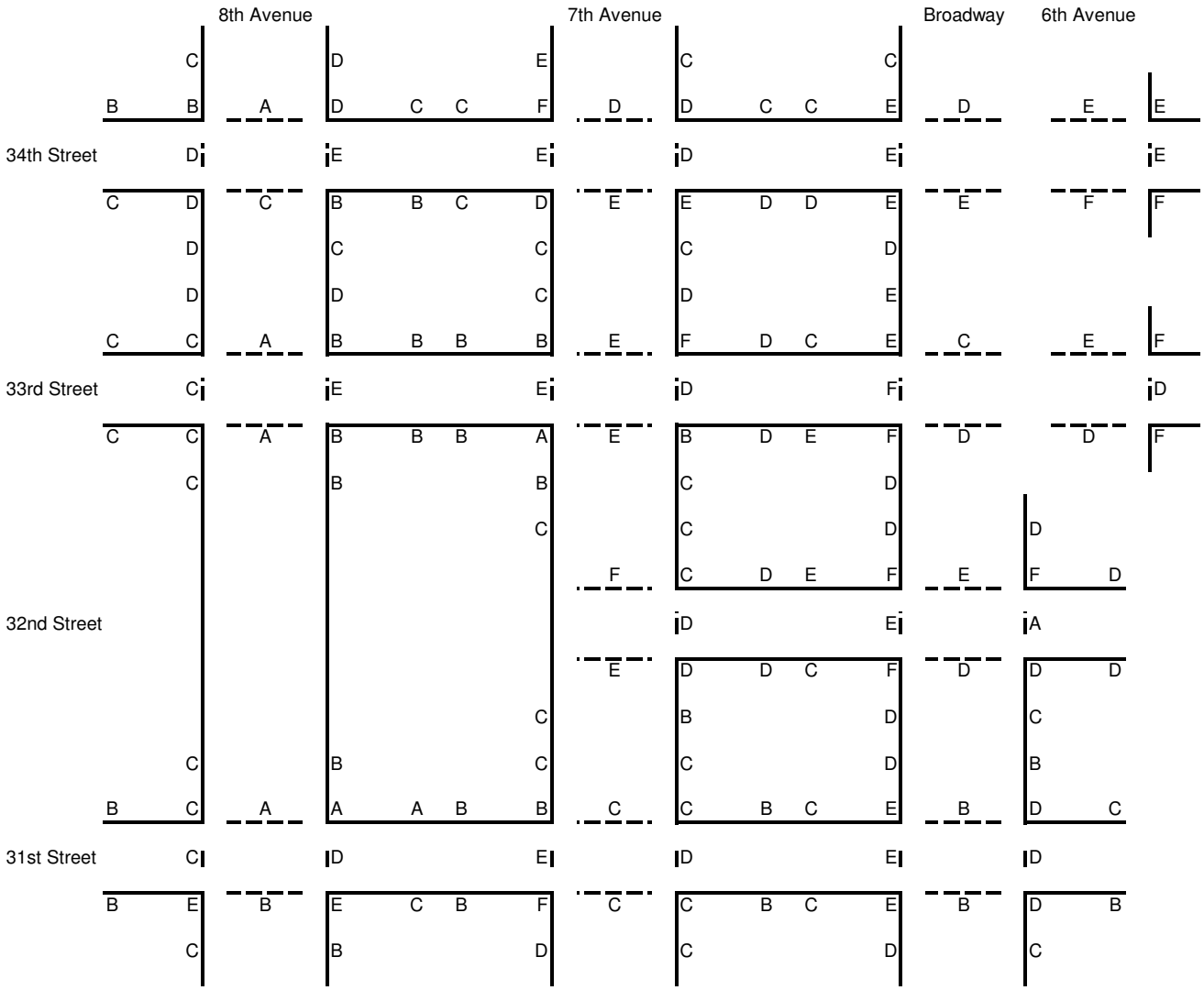

2014 Future with the Proposed Project - Single-Tenant Office Scenario - Pedestrian LOS
SAT Peak 15 Minutes

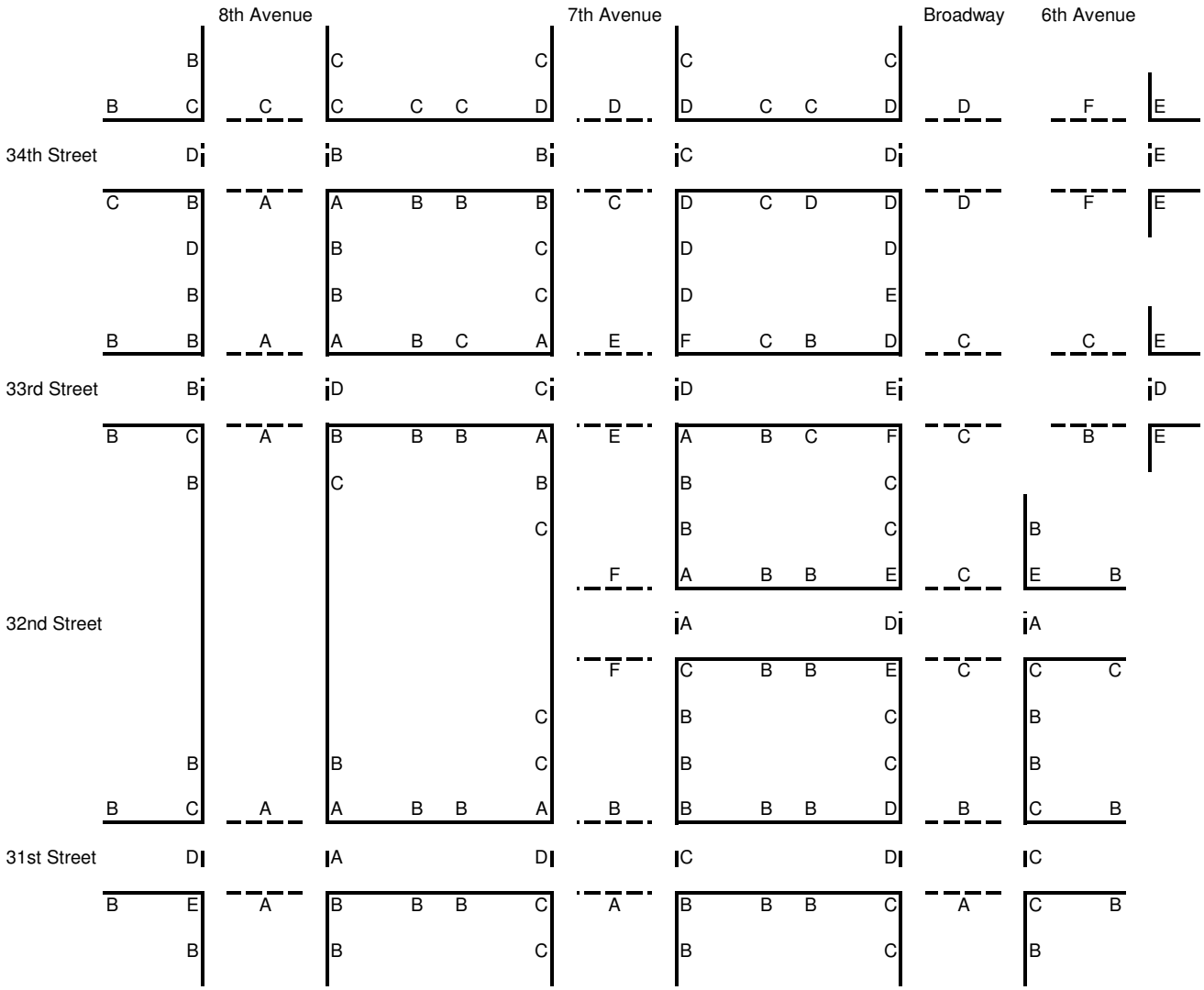

2014 Future with the Proposed Project - Single-Tenant Office Scenario Mitigated - Pedestrian LOS
AM Peak 15 Minutes

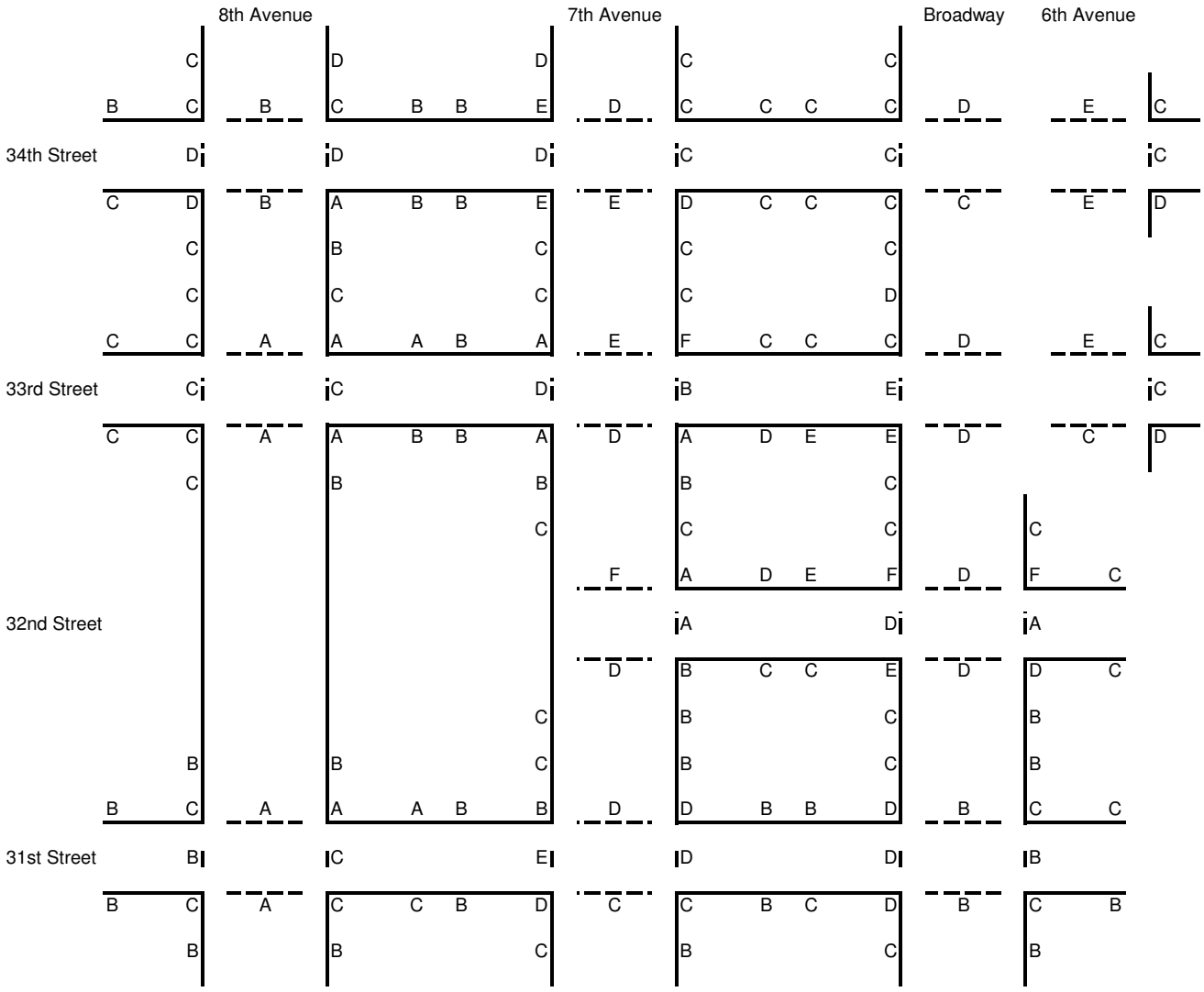

2014 Future with the Proposed Project - Single-Tenant Office Scenario Mitigated - Pedestrian LOS
MD Peak 15 Minutes

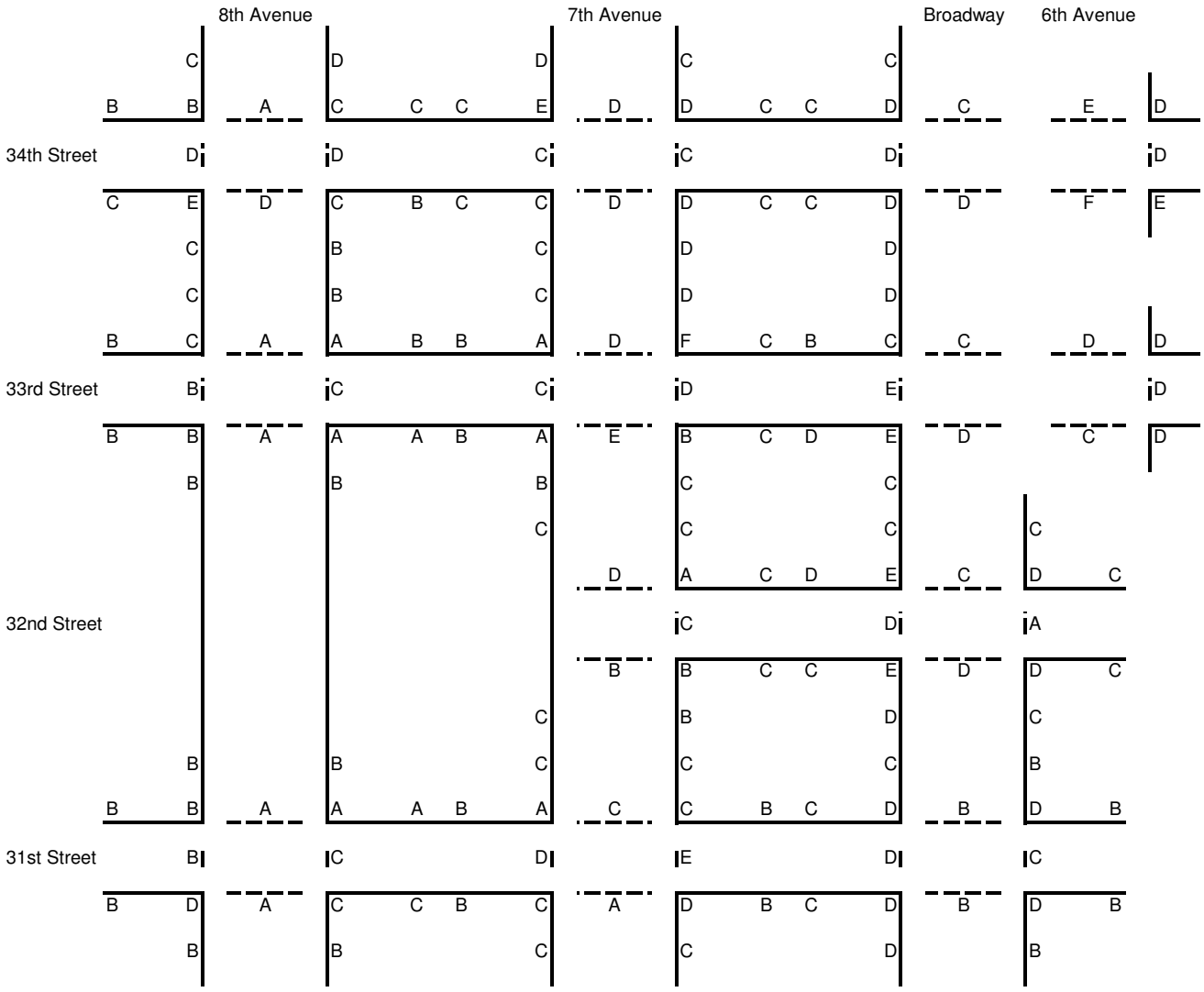

2014 Future with the Proposed Project - Single-Tenant Office Scenario Mitigated - Pedestrian LOS
PM Peak 15 Minutes

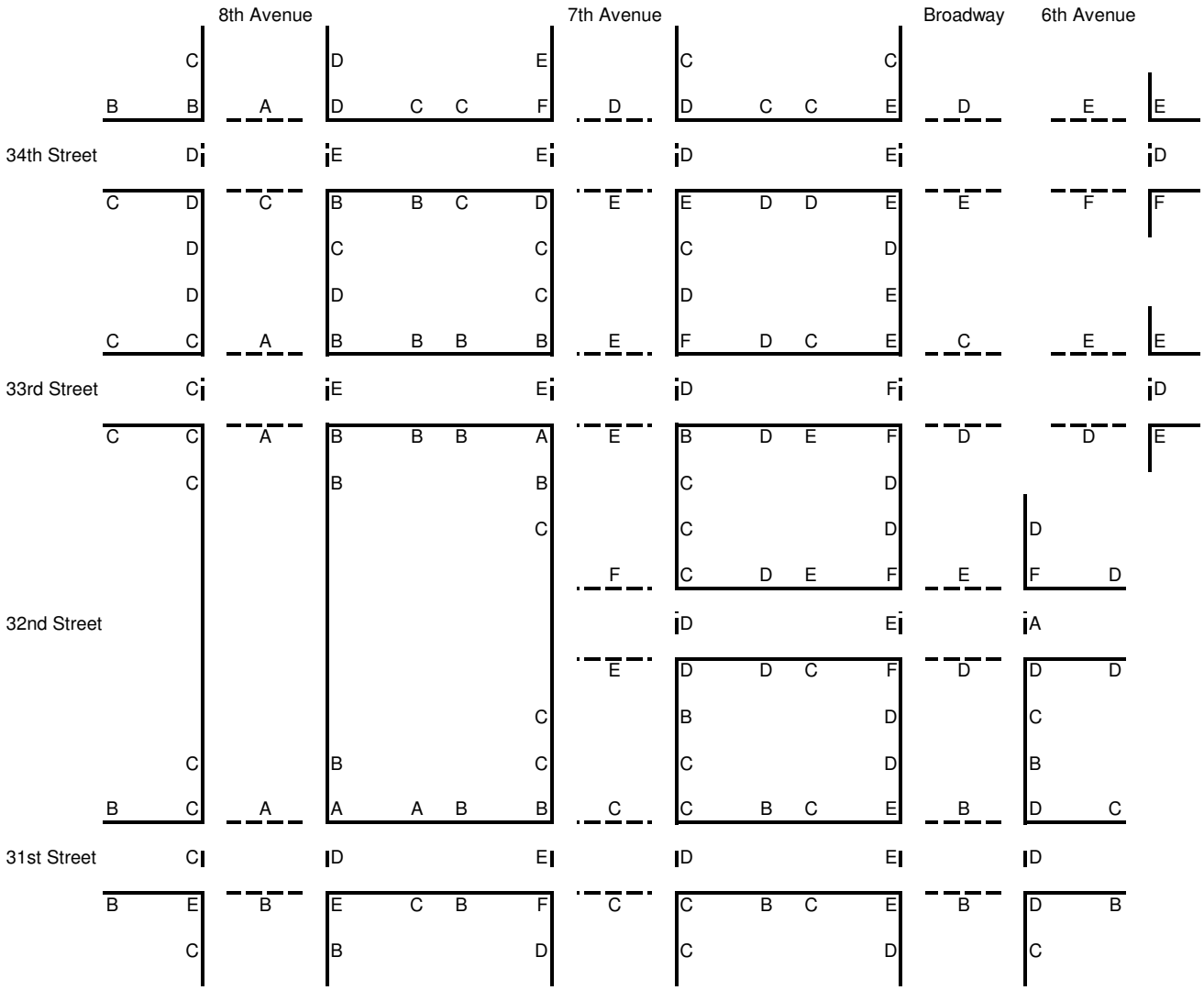

2014 Future with the Proposed Project - Single-Tenant Office Scenario Mitigated - Pedestrian LOS
SAT Peak 15 Minutes

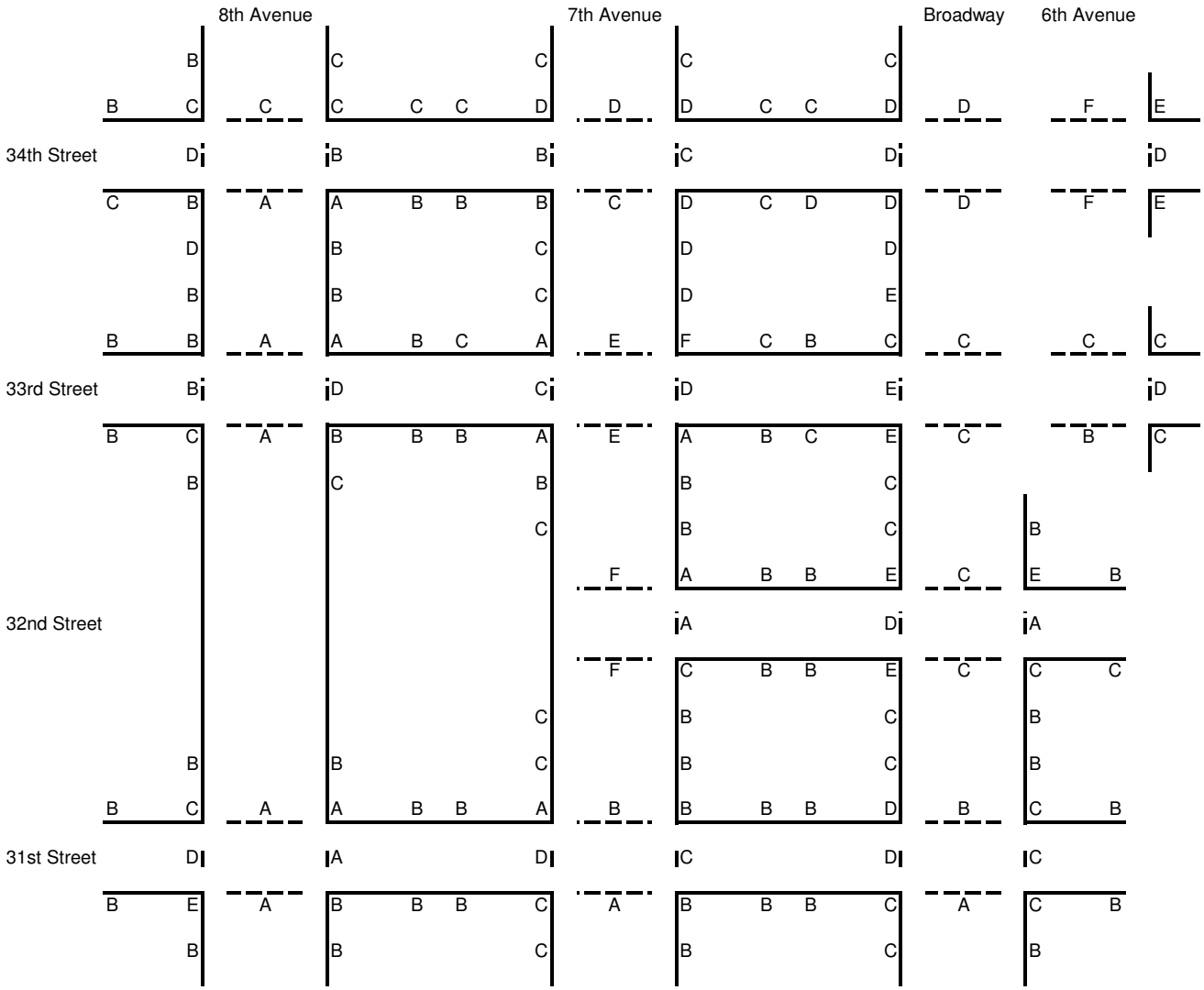

2014 Future with the Proposed Project - Multi-Tenant Office Scenario - Pedestrian LOS
AM Peak 15 Minutes

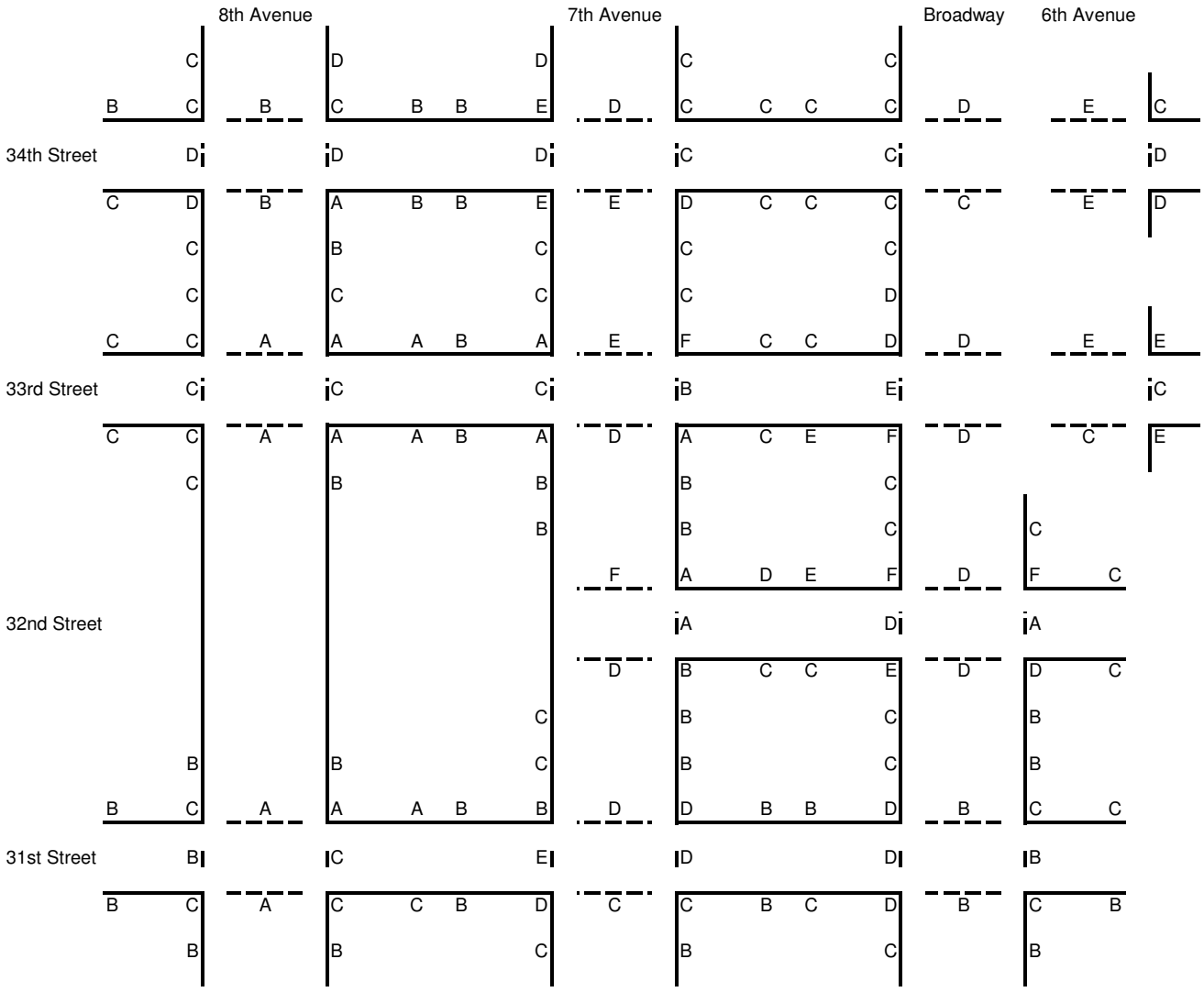

2014 Future with the Proposed Project - Multi-Tenant Office Scenario - Pedestrian LOS
MD Peak 15 Minutes

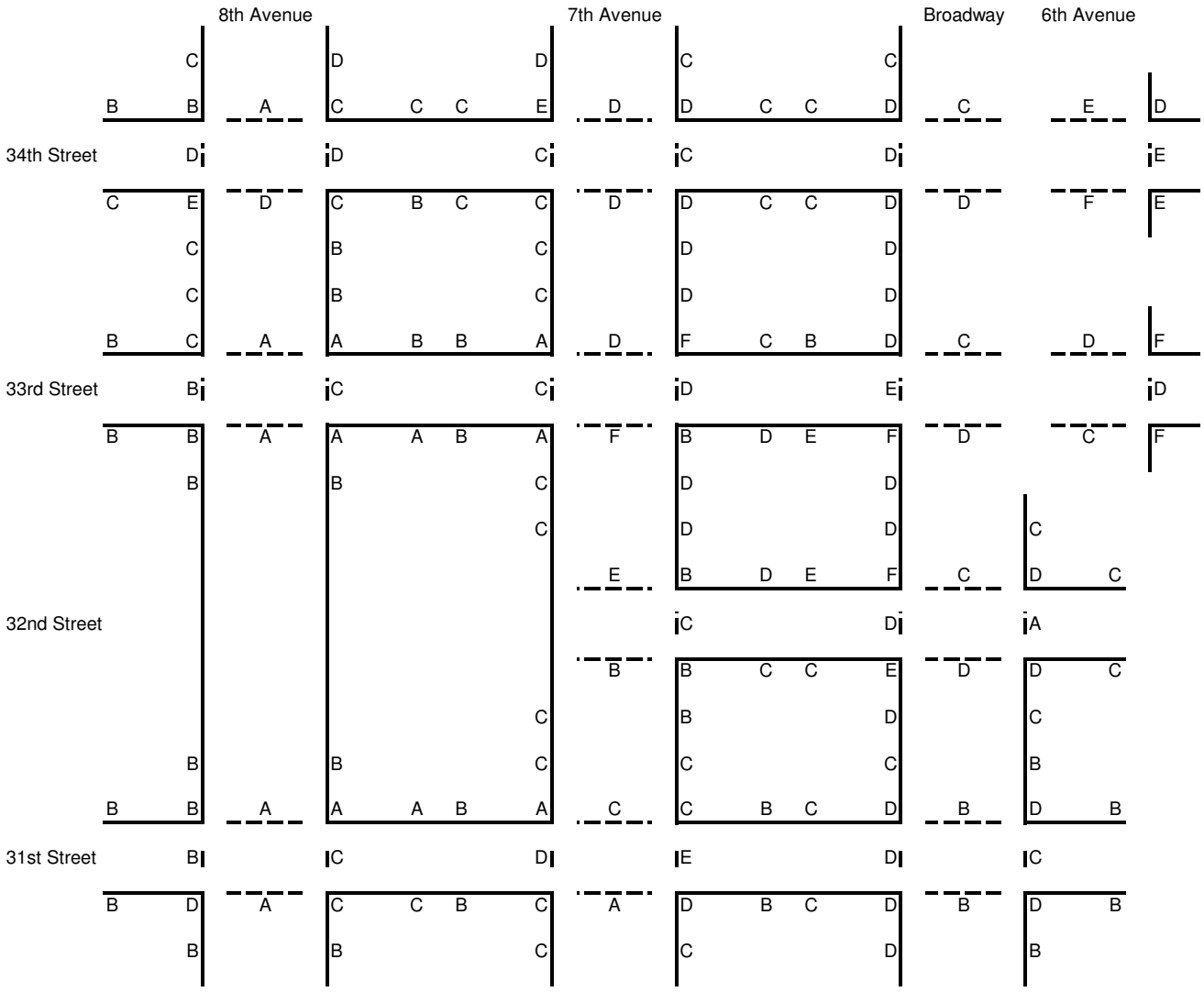

2014 Future with the Proposed Project - Multi-Tenant Office Scenario - Pedestrian LOS
PM Peak 15 Minutes

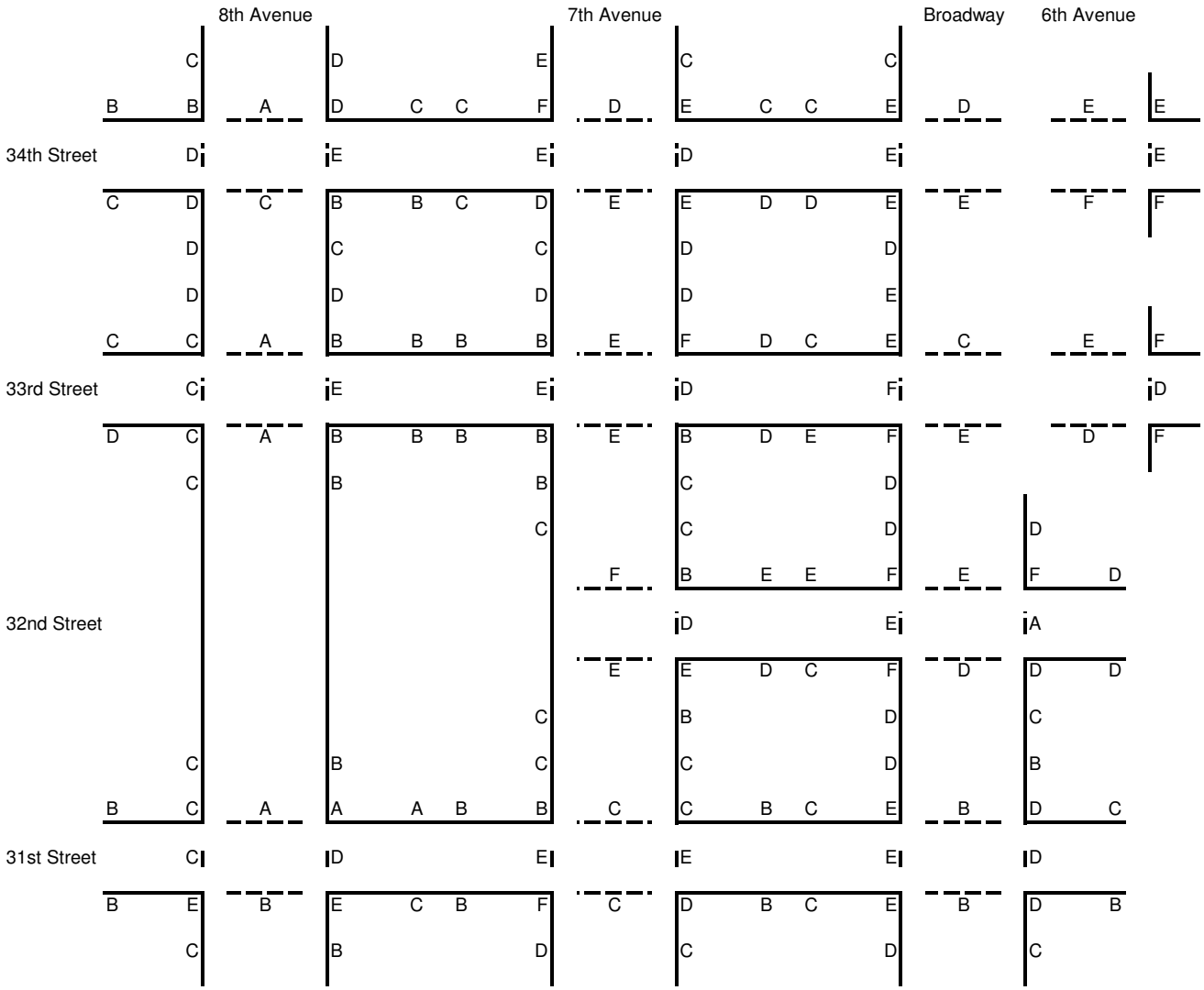

2014 Future with the Proposed Project - Multi-Tenant Office Scenario - Pedestrian LOS
SAT Peak 15 Minutes

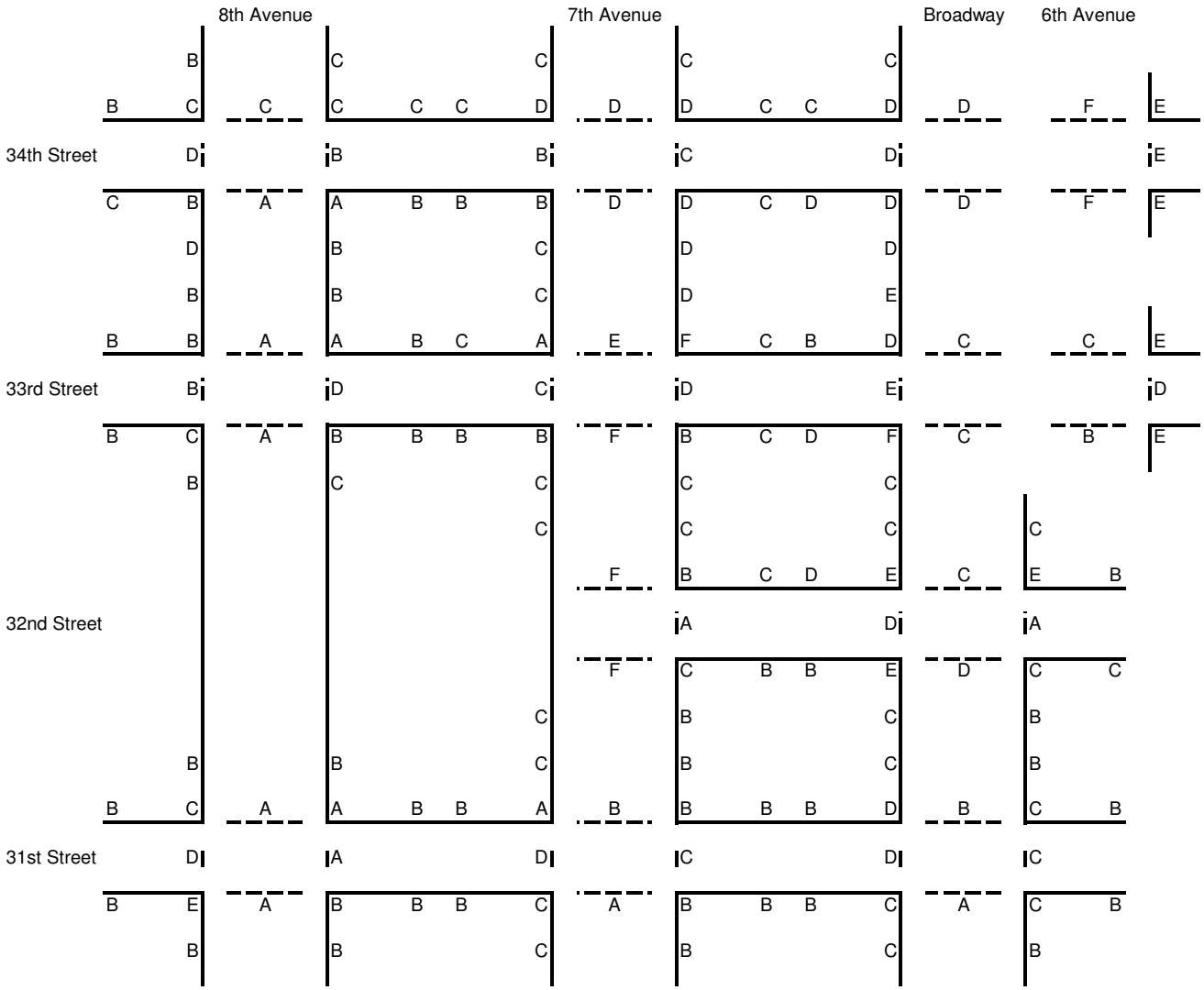

2014 Future with the Proposed Project - Multi-Tenant Office Scenario Mitigated - Pedestrian LOS
AM Peak 15 Minutes

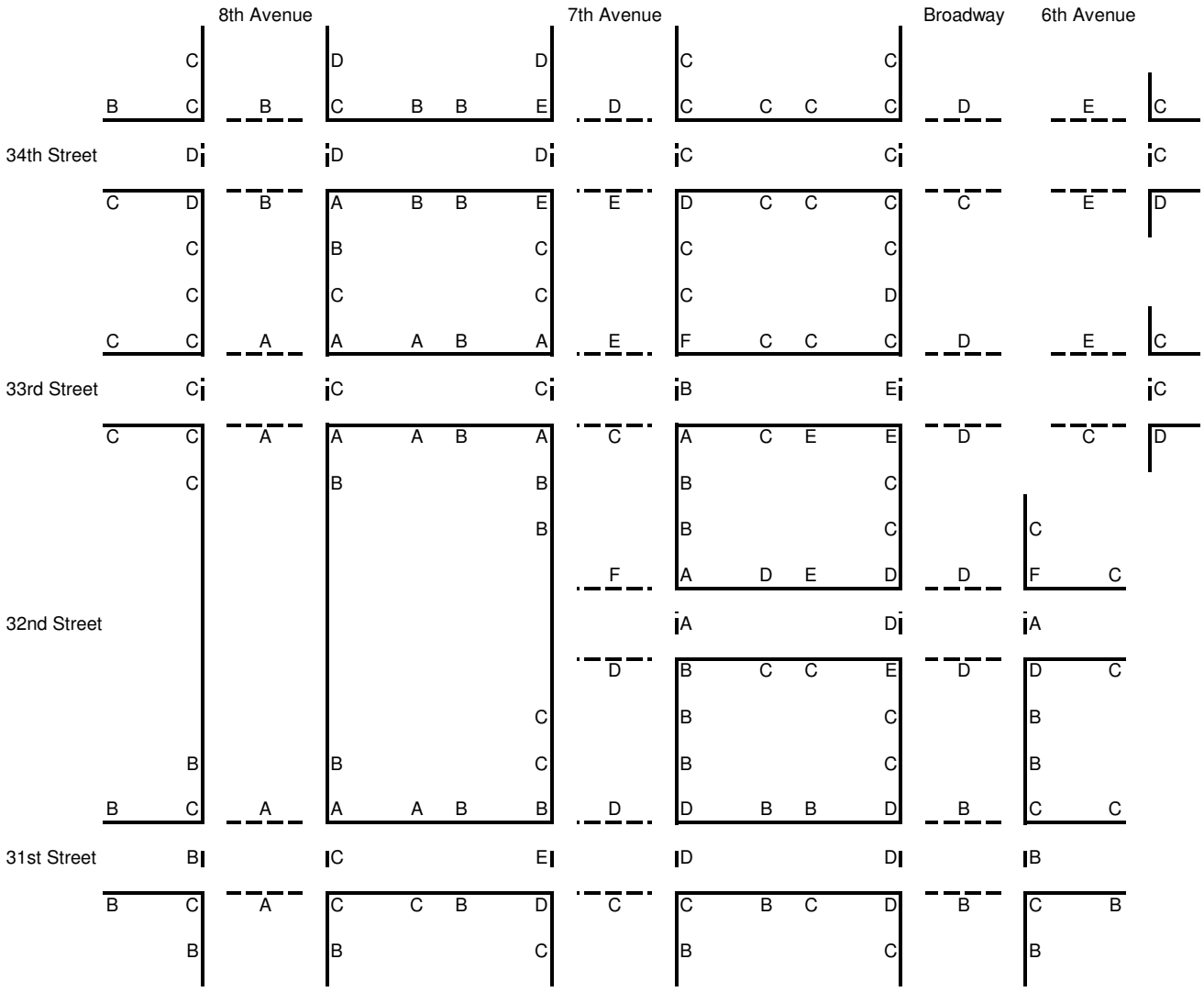

2014 Future with the Proposed Project - Multi-Tenant Office Scenario Mitigated - Pedestrian LOS
MD Peak 15 Minutes

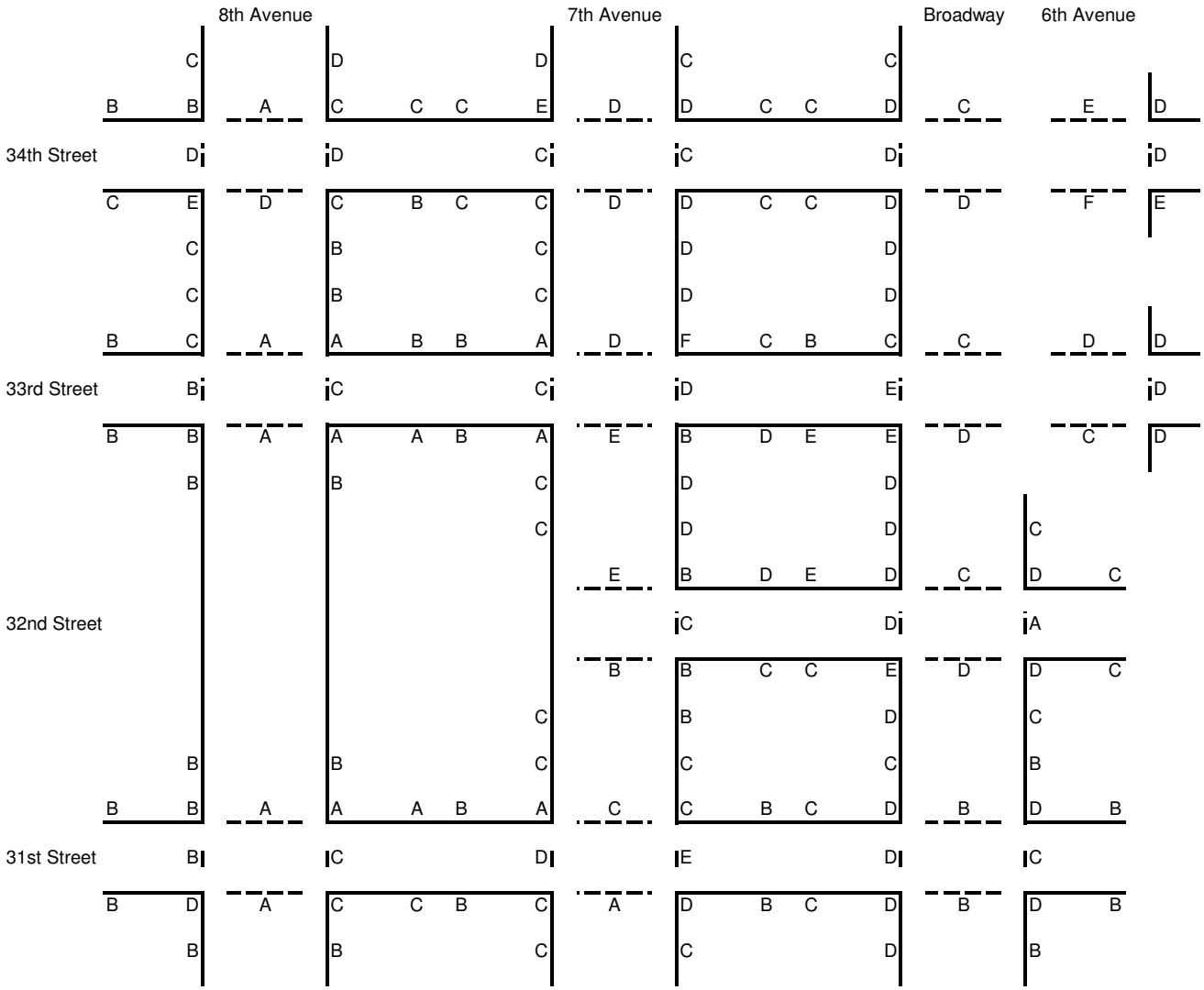

2014 Future with the Proposed Project - Multi-Tenant Office Scenario Mitigated - Pedestrian LOS
PM Peak 15 Minutes

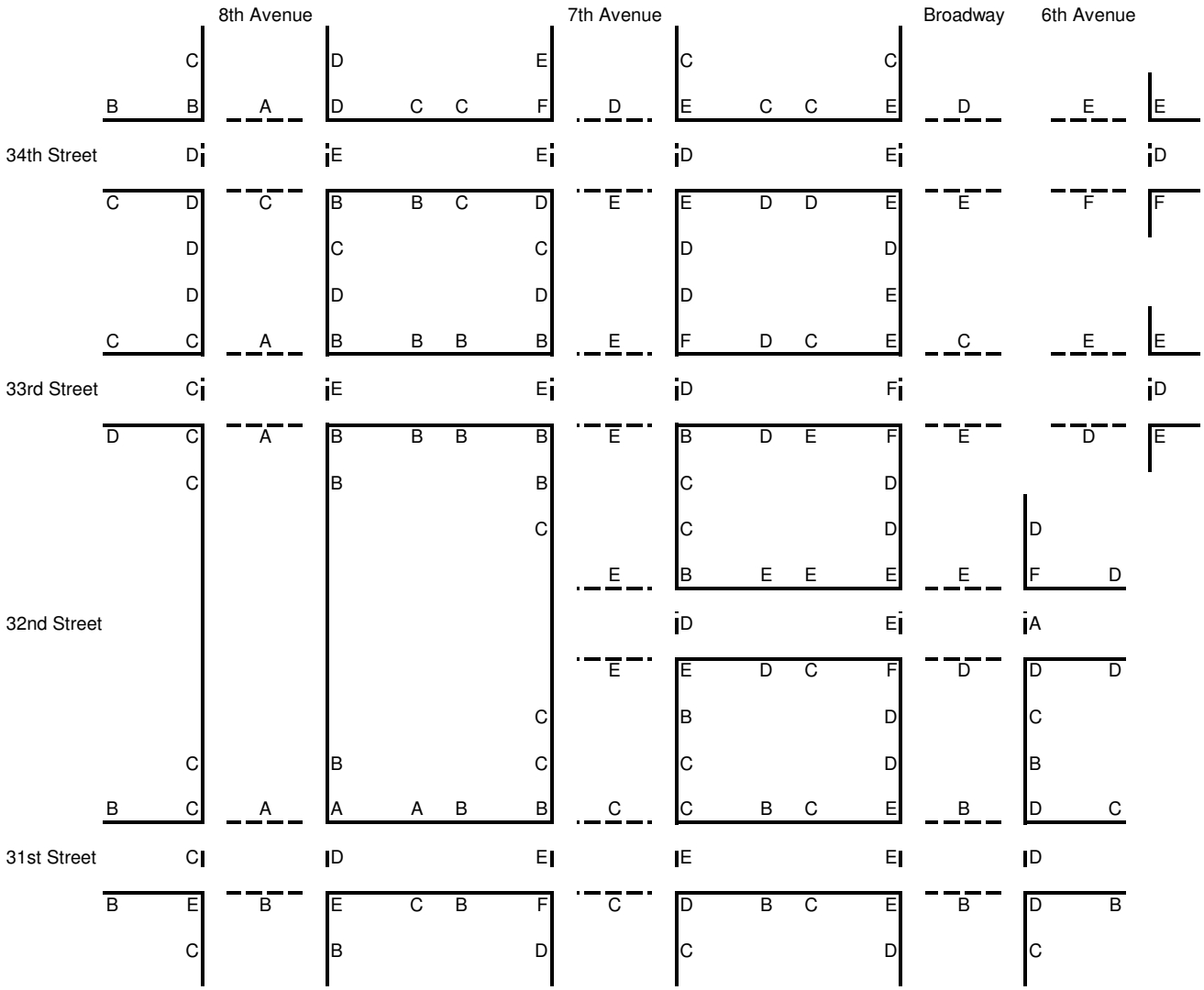

2014 Future with the Proposed Project - Multi-Tenant Office Scenario Mitigated - Pedestrian LOS
SAT Peak 15 Minutes

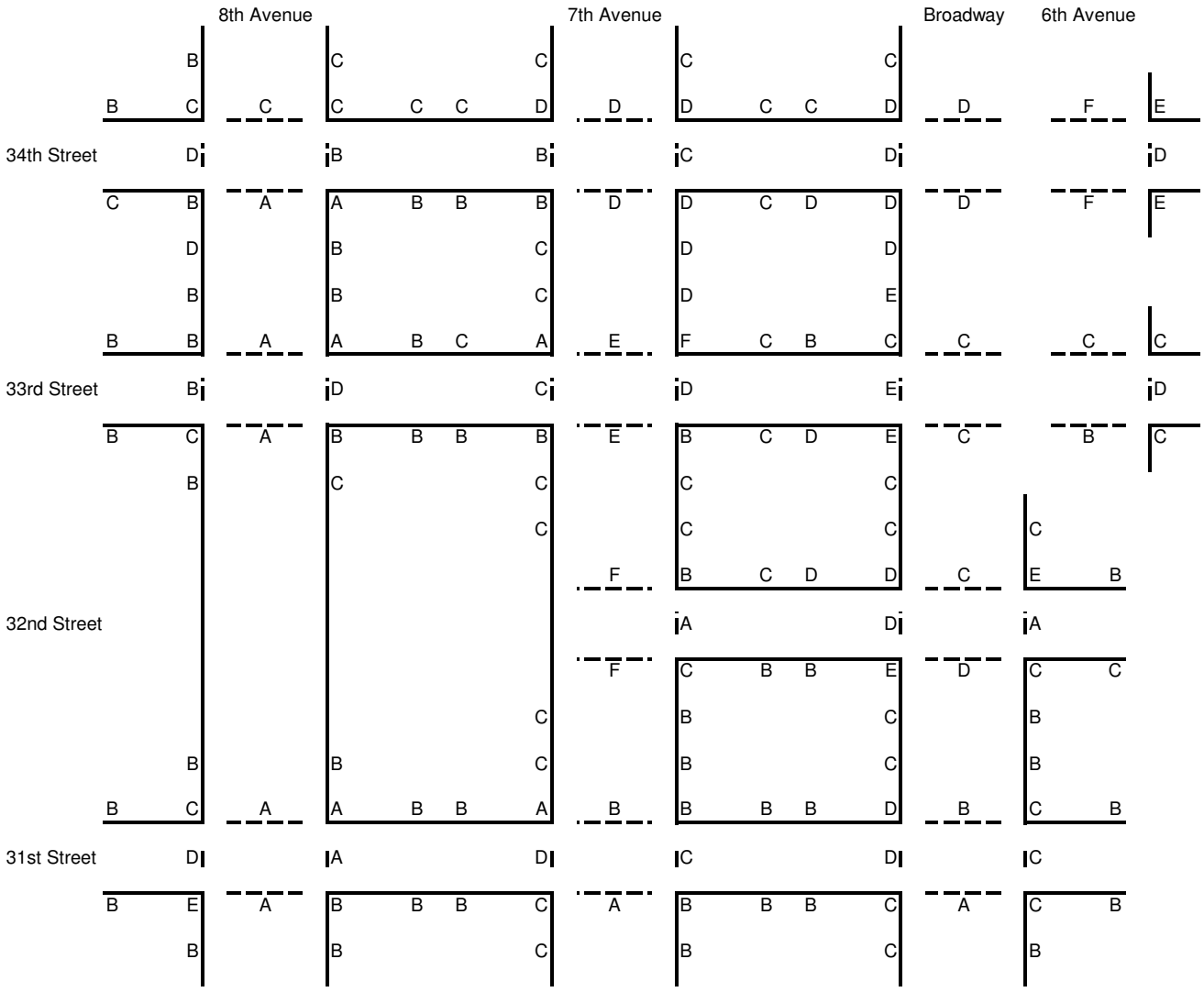

Gimbels Passageway Re-Assignment Diagrams

The following 88 pages describe the process used to re-assign pedestrians in the vicinity of Gimbels Passageway to represent the diversion of pedestrians expected once the passageway is re-opened. As the passageway runs between 6th and 7th Avenues, the re-assignment captures a percentage of pedestrians from each alternative route and re-assigns their trip in the vicinity of the passageway.

The re-assignment for each peak period includes 22 diagrams detailing and summarizing the process, as described in the table below.

Page	***Alternative***	***Description***
1	37th thru 35th Streets	Unassignment without Gimbels
2		Reassignment with Gimbels
3		Subtotal of Adjustments
4	North Side of 34th Street	Unassignment without Gimbels
5		Reassignment with Gimbels
6		Subtotal of Adjustments
7	South Side of 34th Street	Unassignment without Gimbels
8		Reassignment with Gimbels
9		Subtotal of Adjustments
10	North Side of 33rd Street	Unassignment without Gimbels
11		Reassignment with Gimbels
12		Subtotal of Adjustments
13	South Side of 33rd Street	Unassignment without Gimbels
14		Reassignment with Gimbels
15		Subtotal of Adjustments
16	North Side of 32nd Street	Unassignment without Gimbels
17		Reassignment with Gimbels
18		Subtotal of Adjustments
19	South Side of 32nd Street	Unassignment without Gimbels
20		Reassignment with Gimbels
21		Subtotal of Adjustments
22	All	Total Adjustment

2014 Gimbels Passageway Capture Adjustment
AM Peak 15 Minutes
35-37 -# Total

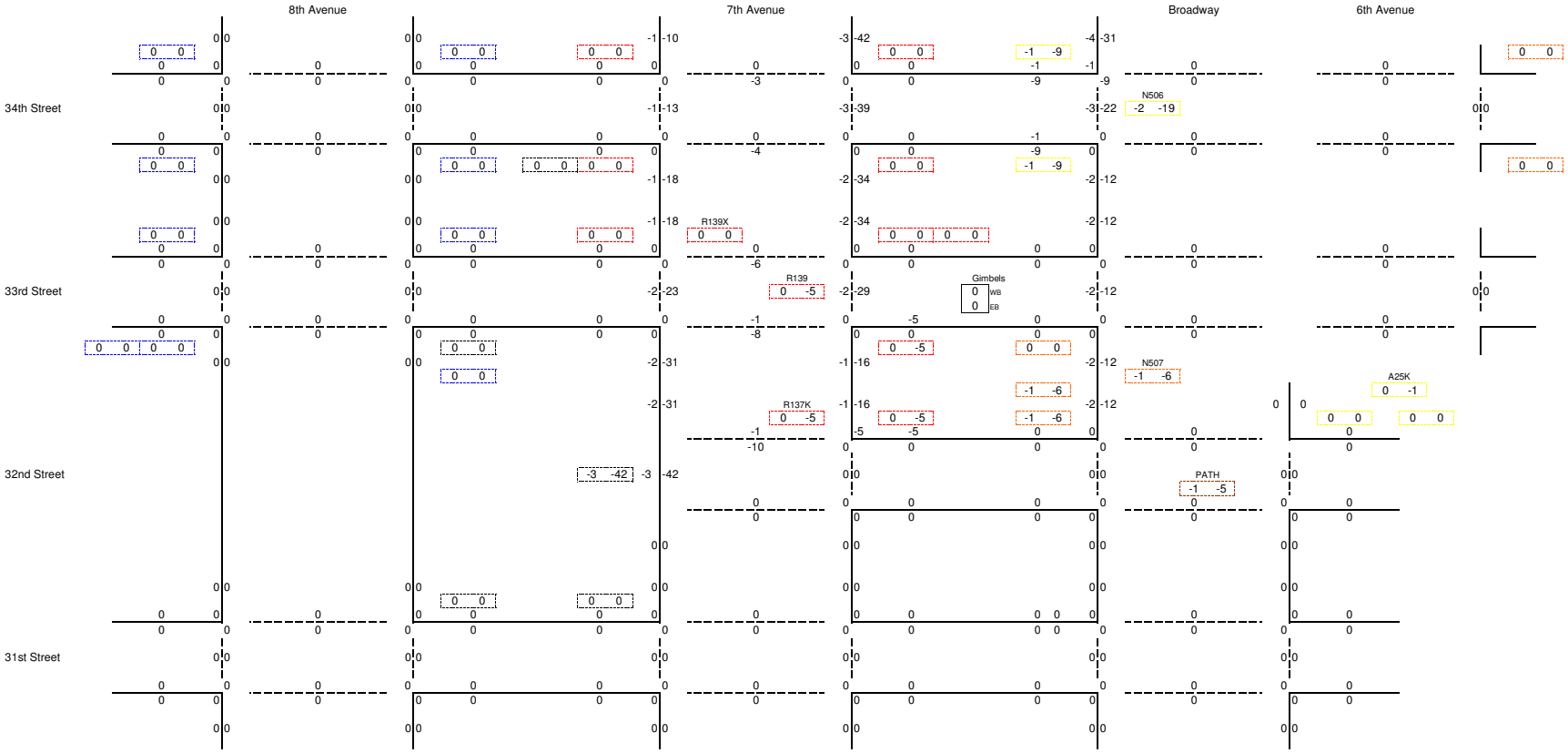

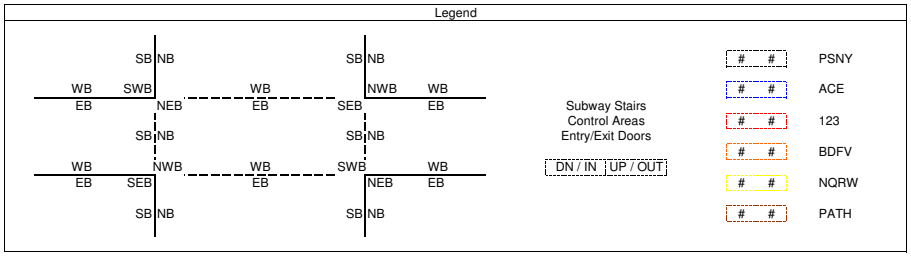

2014 Gimbels Passageway Capture Adjustment
AM Peak 15 Minutes
35-37 +# Total

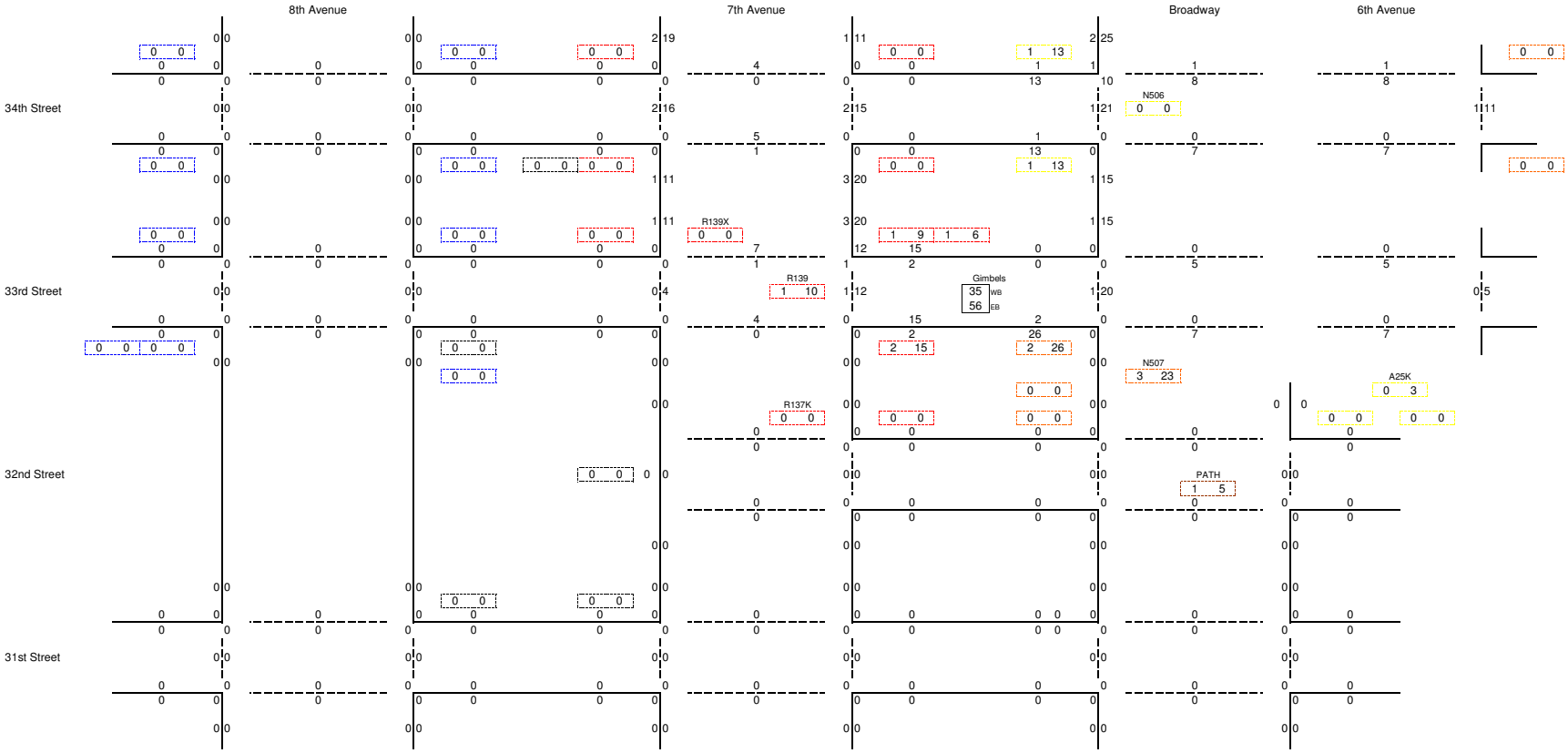

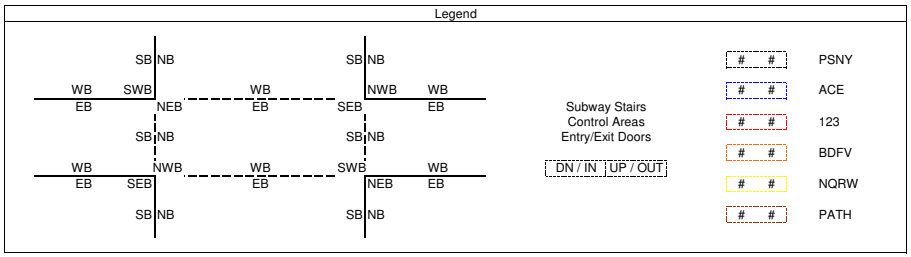

2014 Gimbels Passageway Capture Adjustment
AM Peak 15 Minutes
35-37 Total

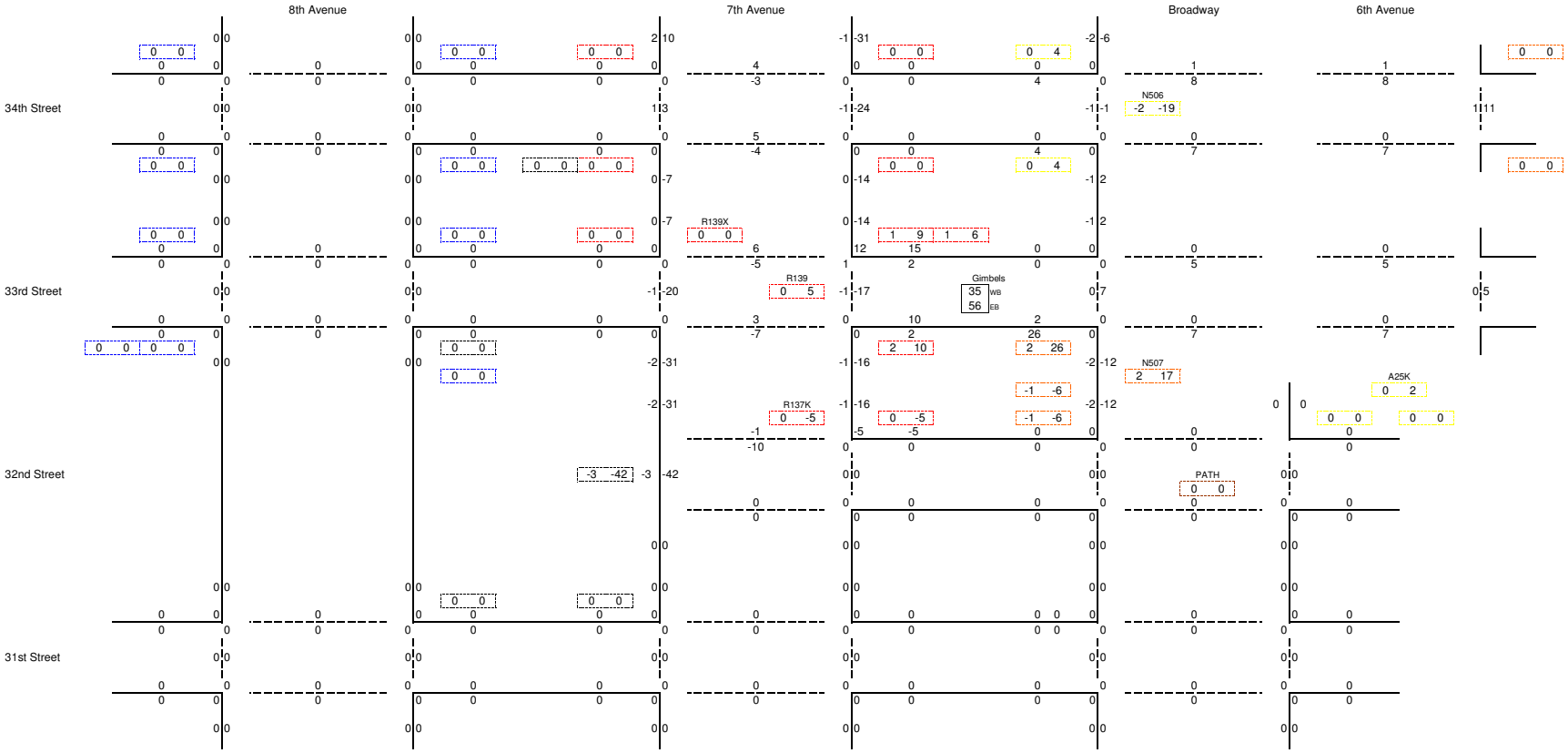

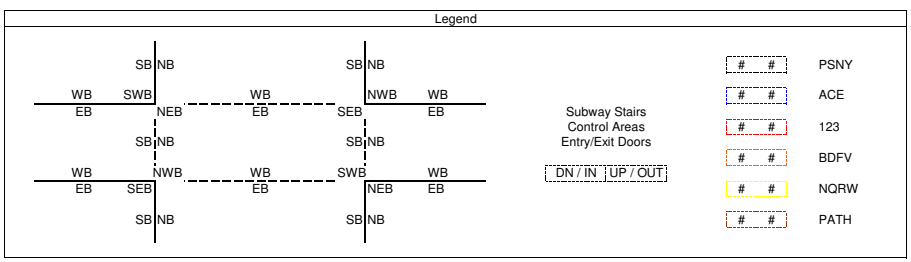

2014 Gimbels Passageway Capture Adjustment
AM Peak 15 Minutes
34N -# Total

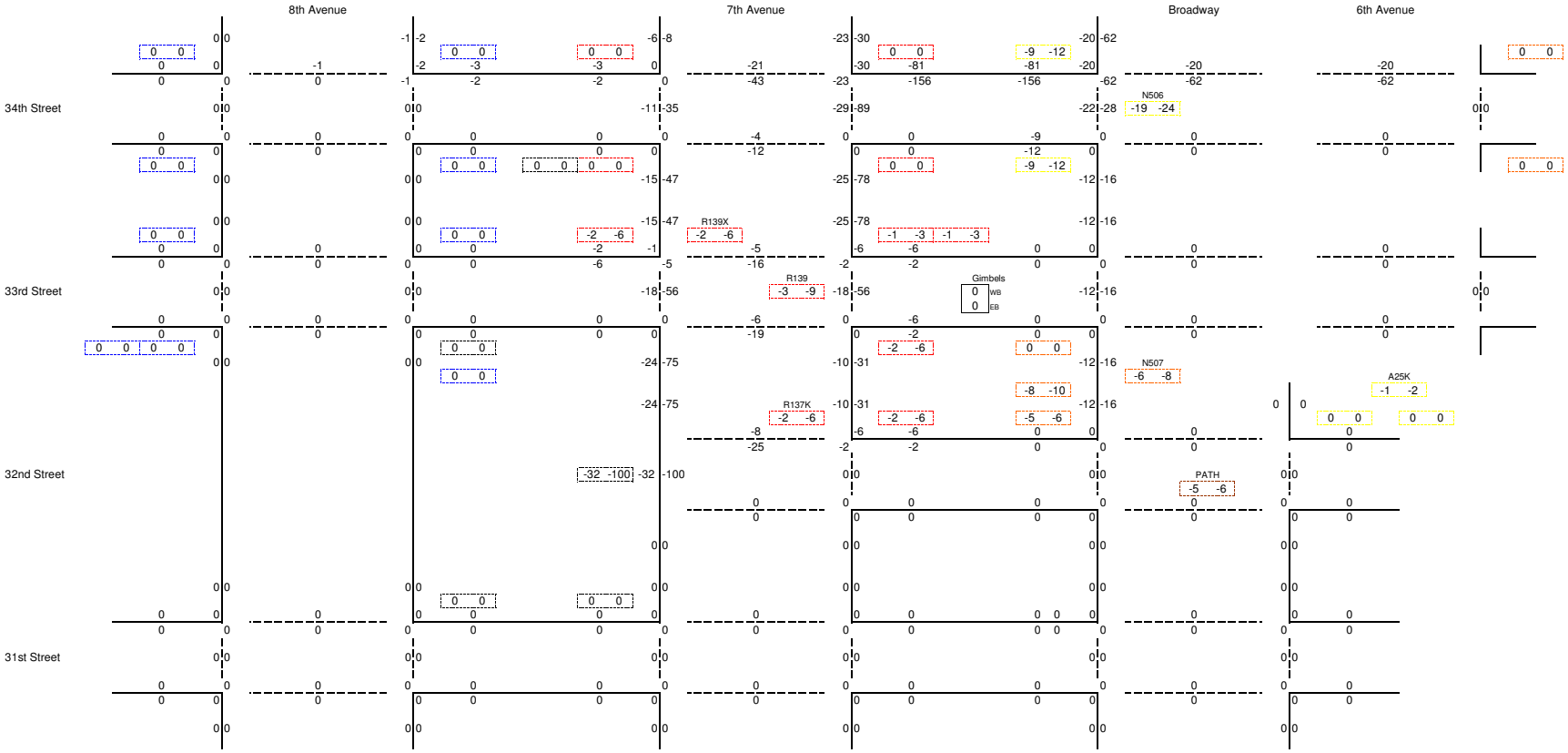

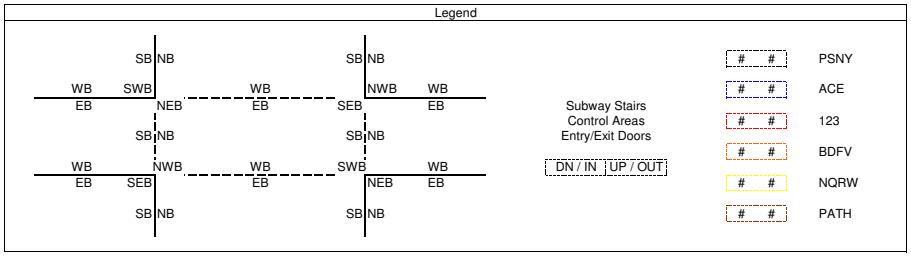

2014 Gimbels Passageway Capture Adjustment
AM Peak 15 Minutes
34N +# Total

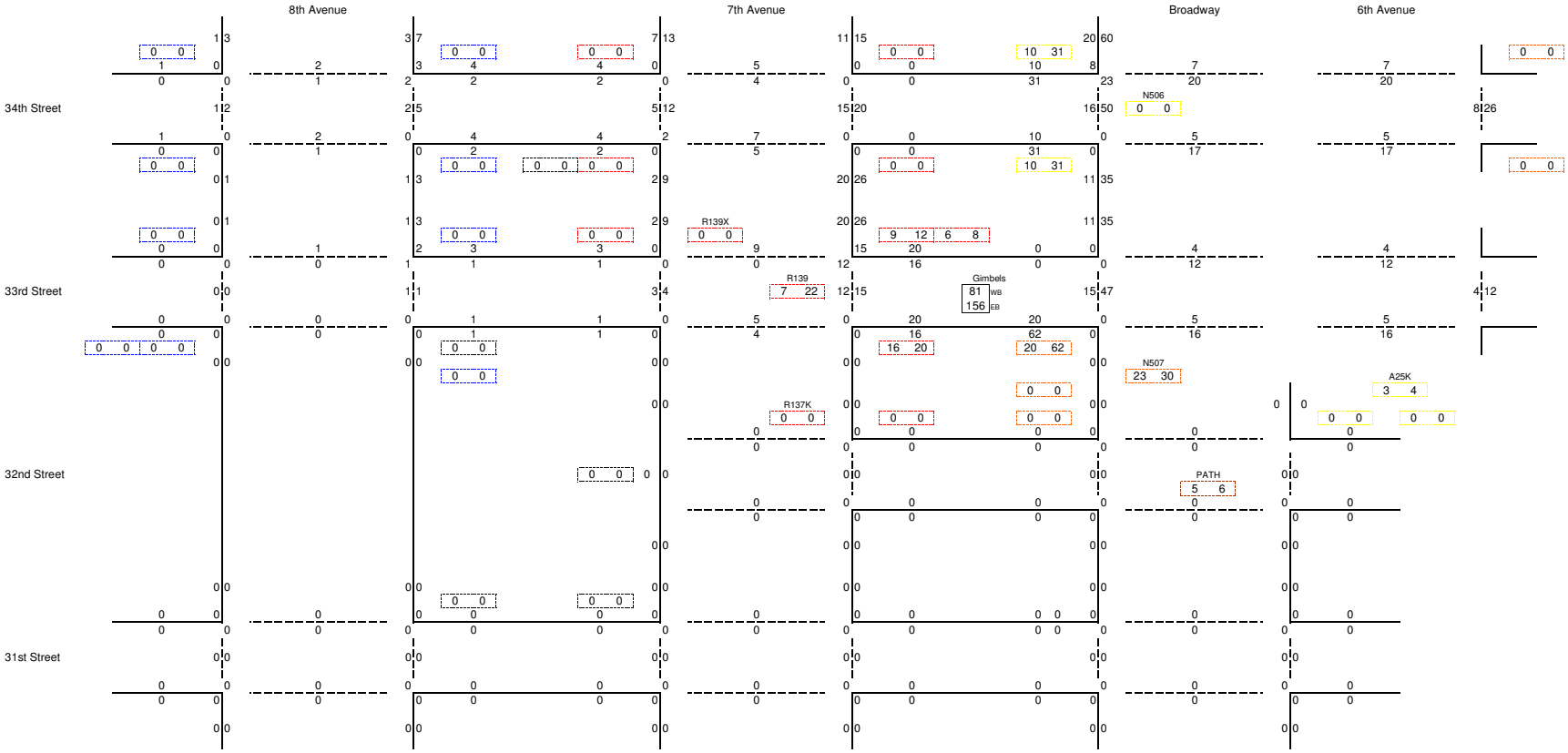

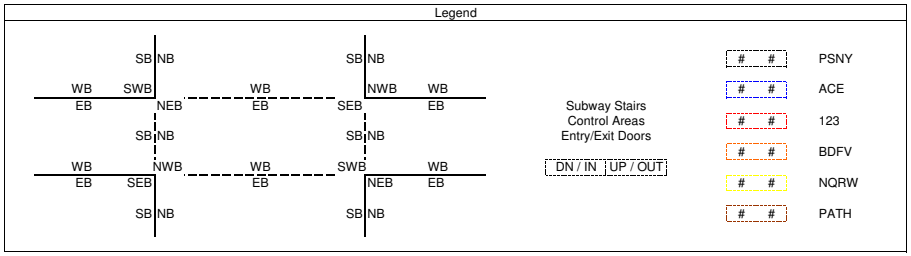

2014 Gimbels Passageway Capture Adjustment
AM Peak 15 Minutes
34N Total

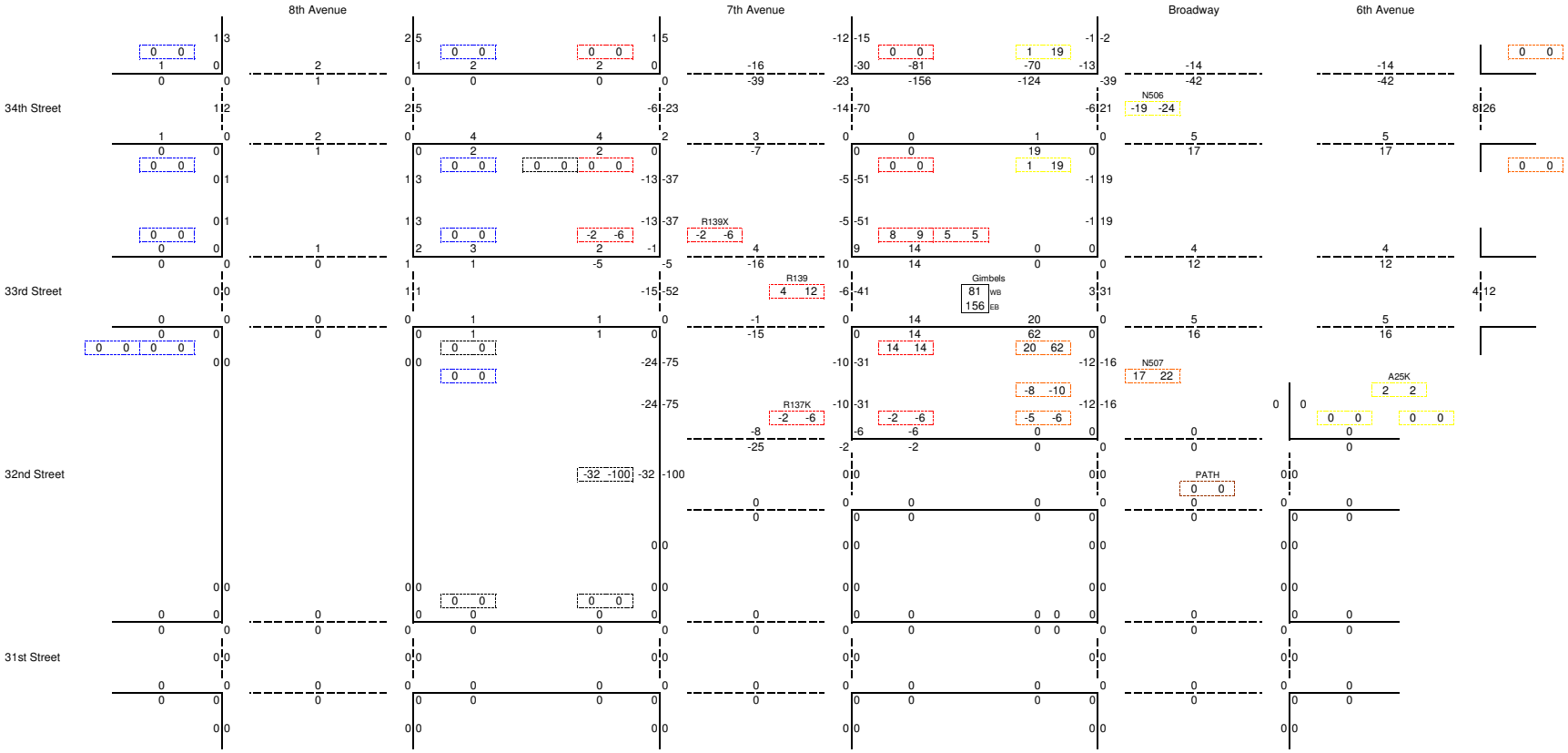

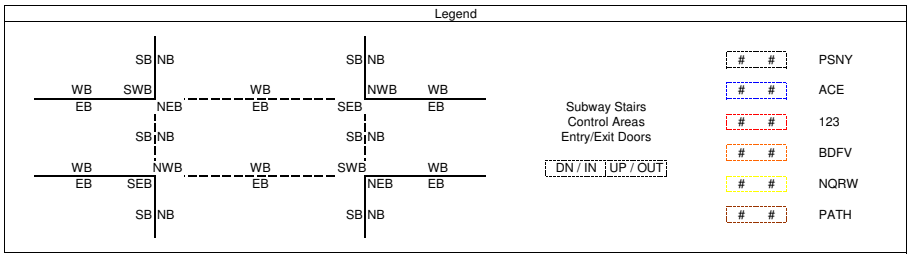

2014 Gimbels Passageway Capture Adjustment
AM Peak 15 Minutes
34S -# Total

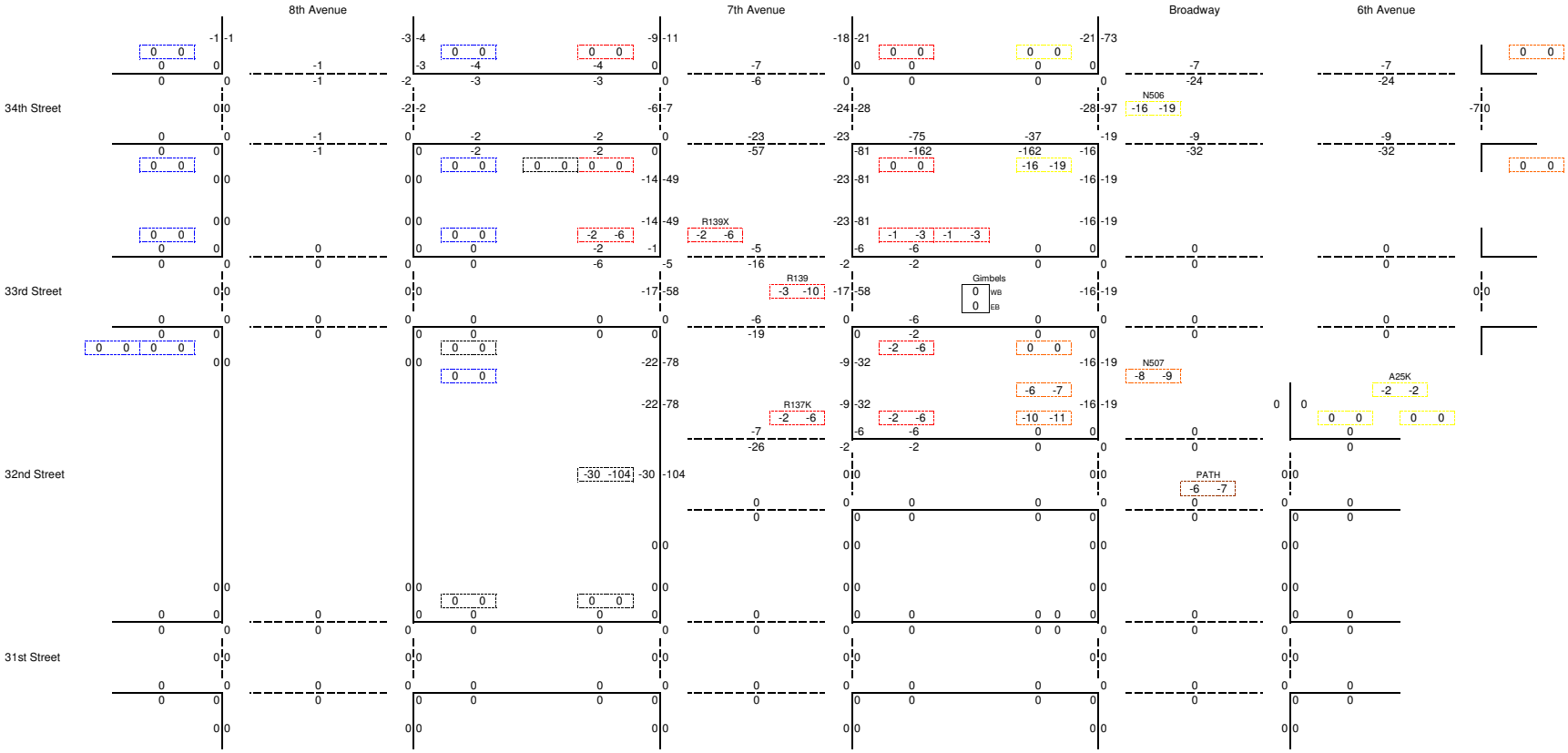

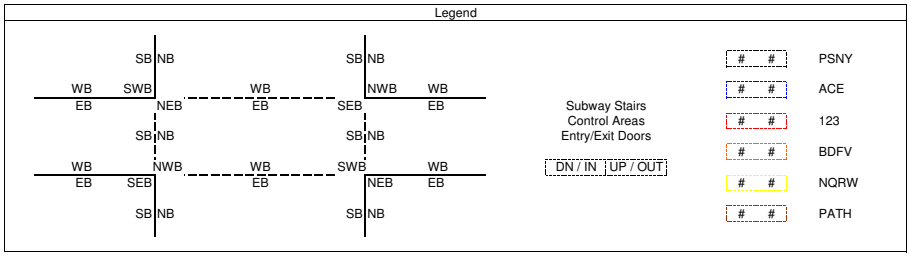

2014 Gimbels Passageway Capture Adjustment
AM Peak 15 Minutes
34S +# Total

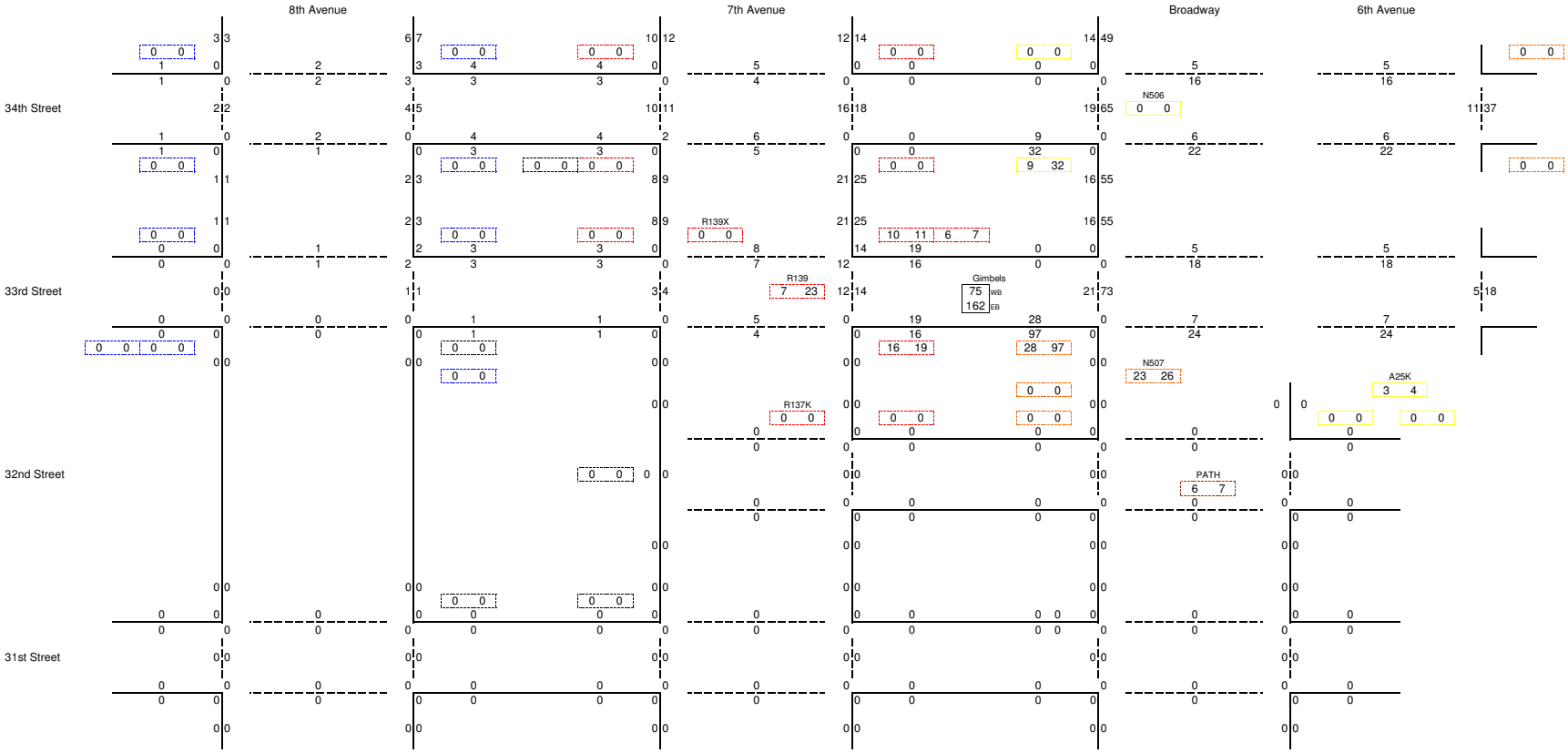

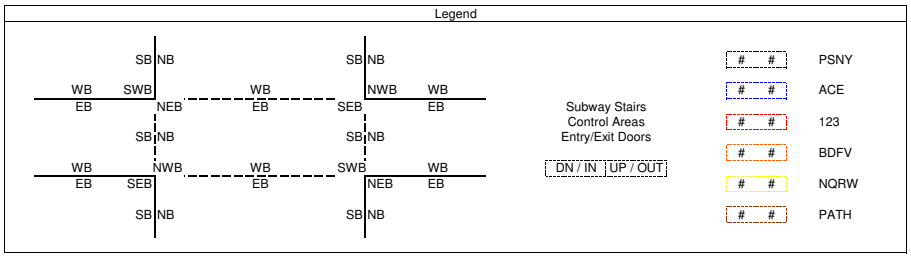

2014 Gimbels Passageway Capture Adjustment
AM Peak 15 Minutes
34S Total

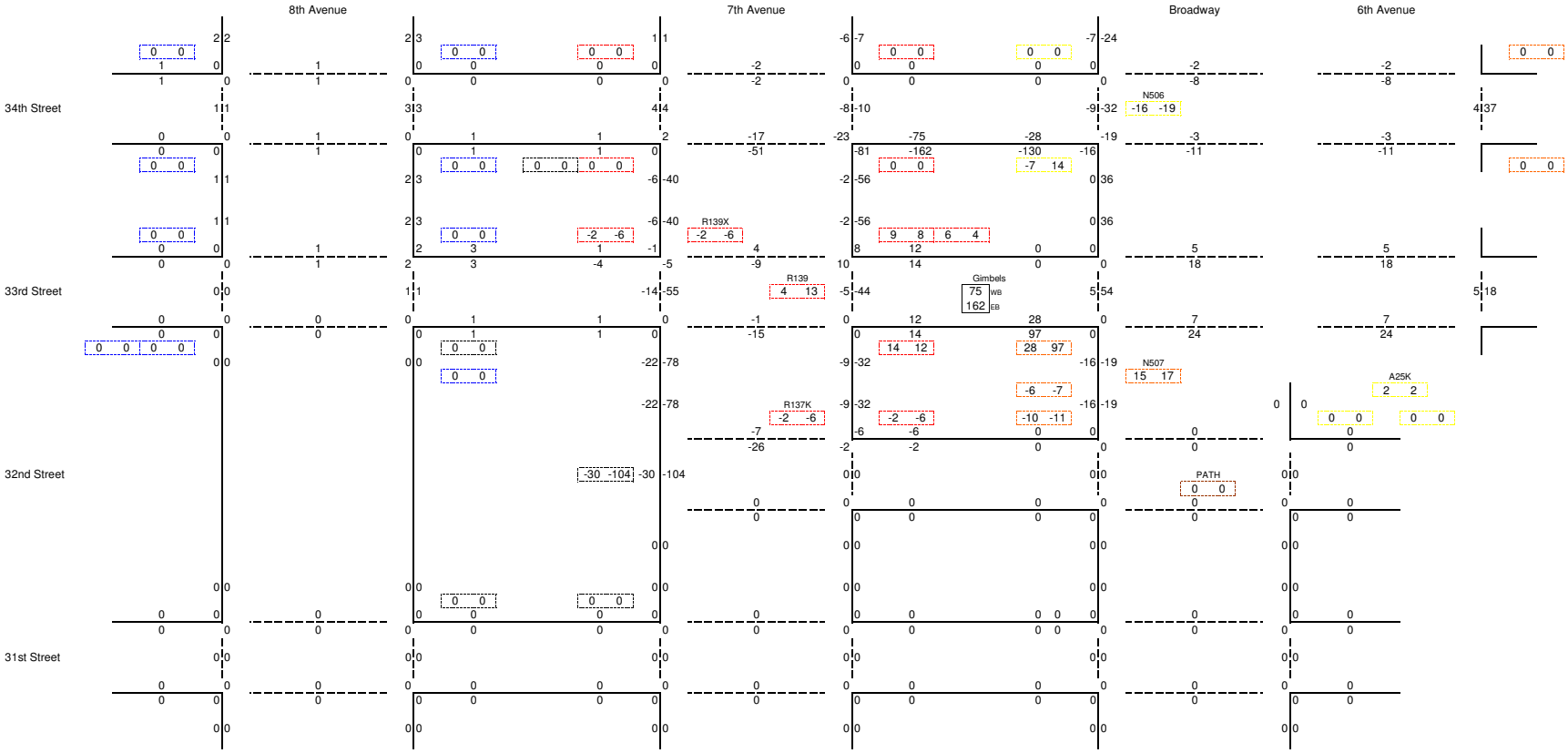

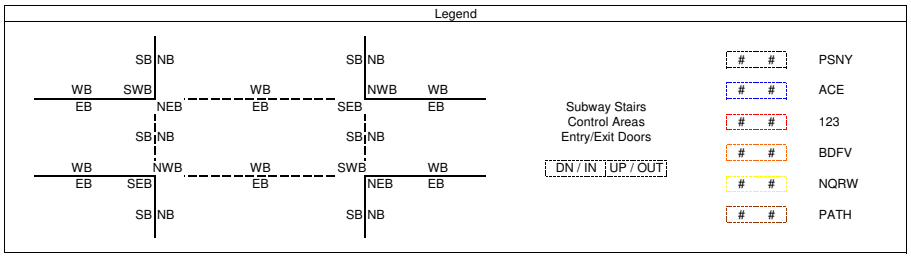

2014 Gimbels Passageway Capture Adjustment
AM Peak 15 Minutes
33N -# Total

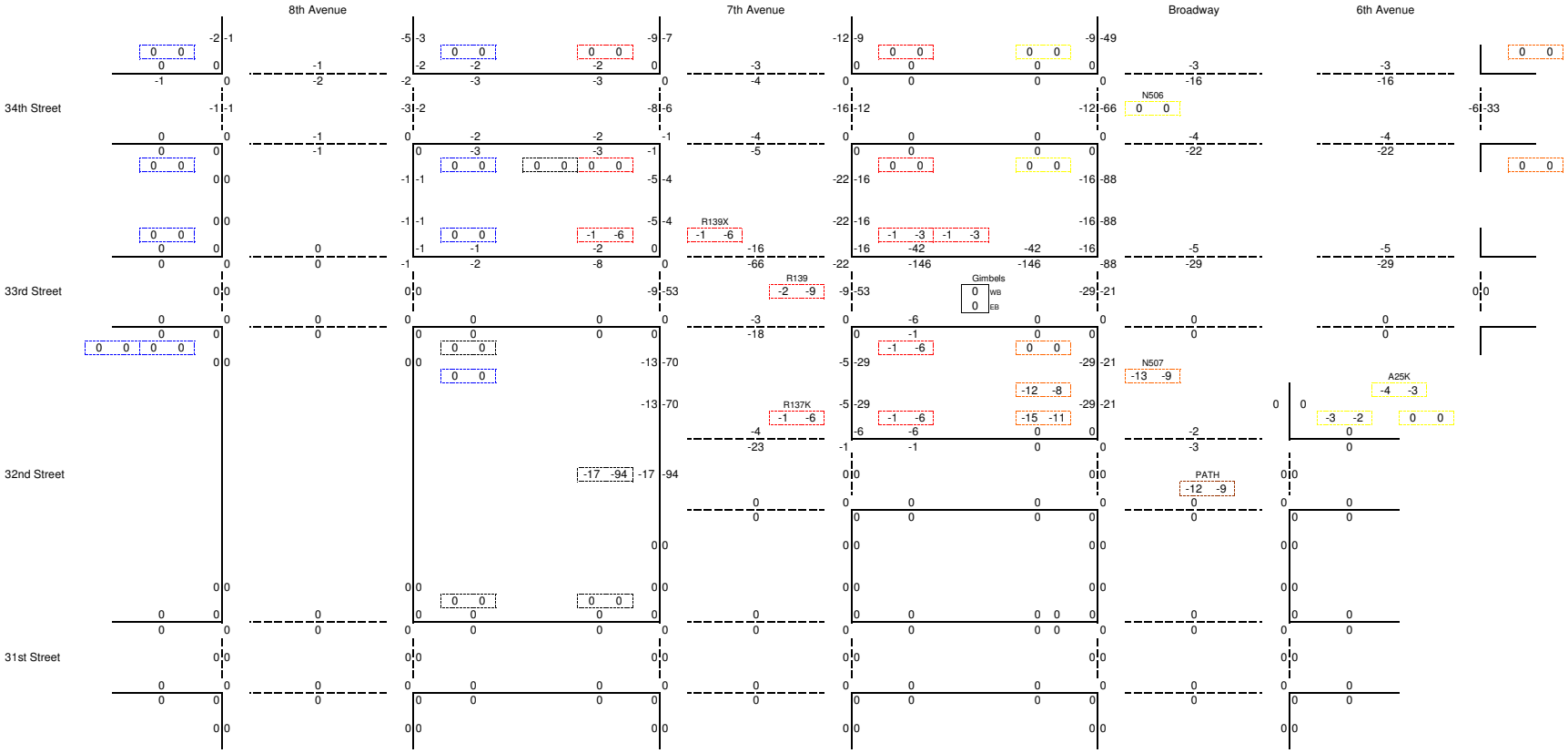

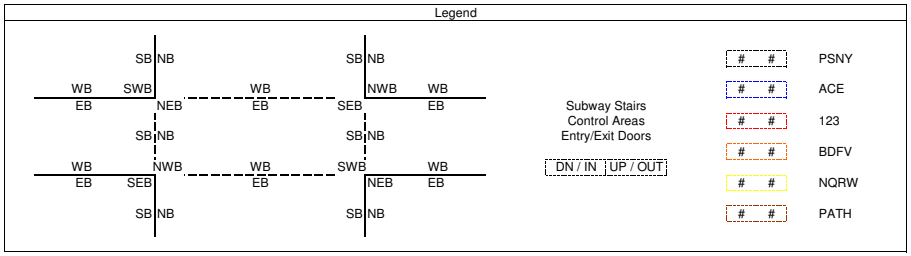

2014 Gimbels Passageway Capture Adjustment
AM Peak 15 Minutes
33N +# Total

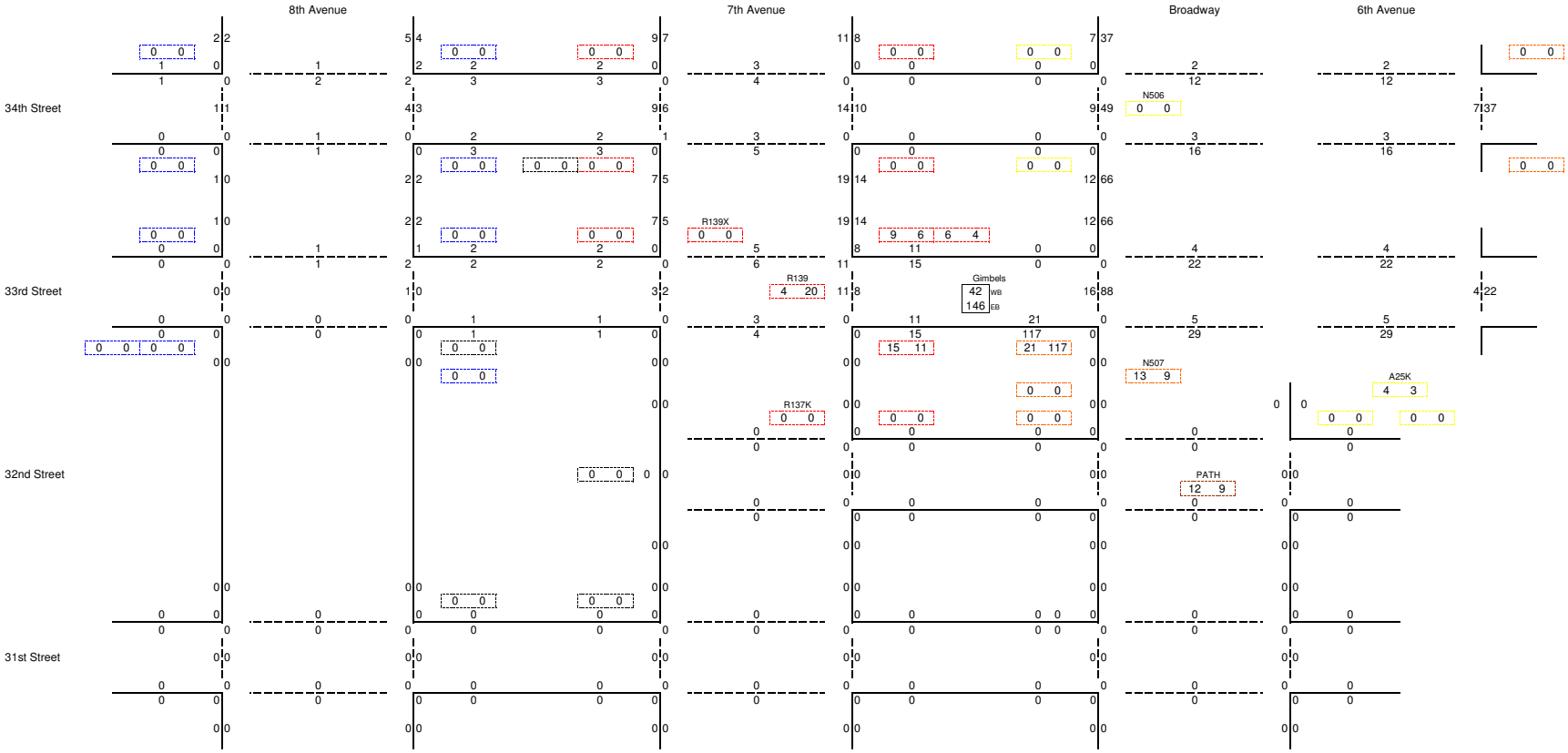

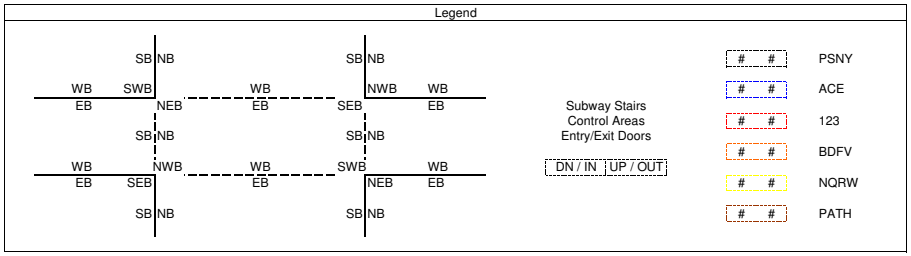

2014 Gimbels Passageway Capture Adjustment
AM Peak 15 Minutes
33N Total

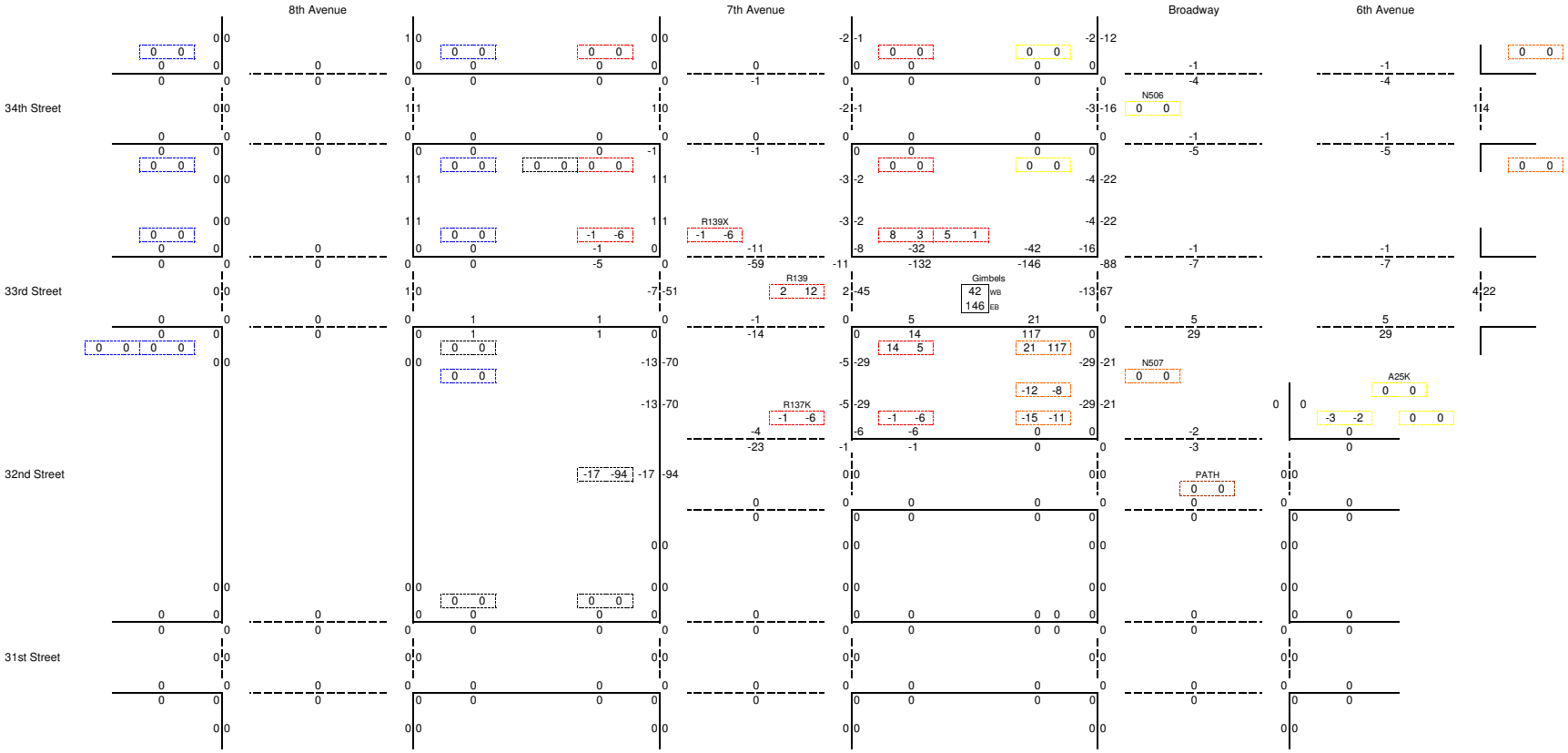

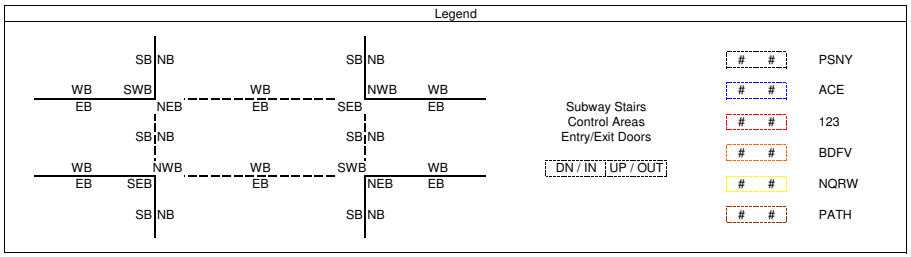

2014 Gimbels Passageway Capture Adjustment
AM Peak 15 Minutes
33S -# Total

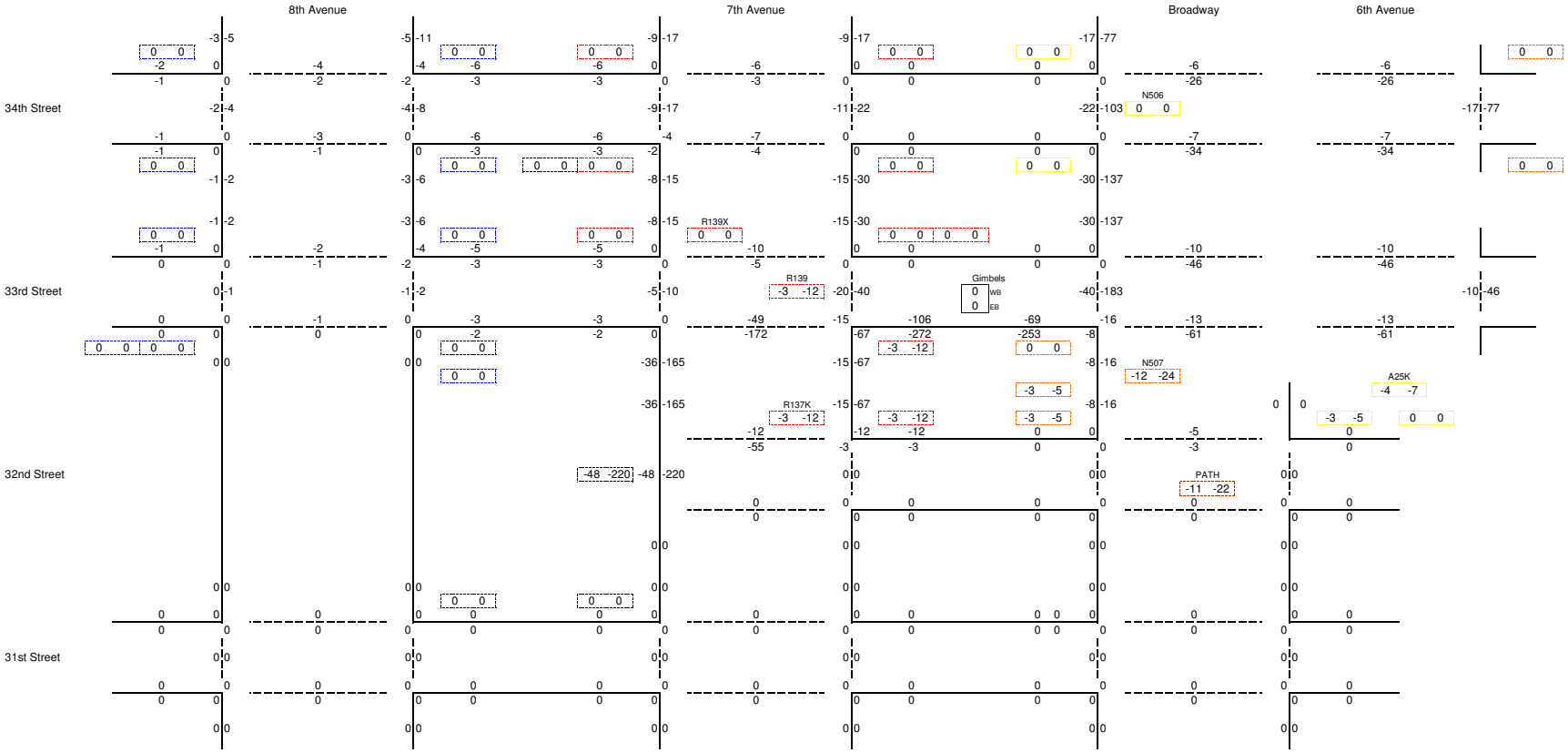

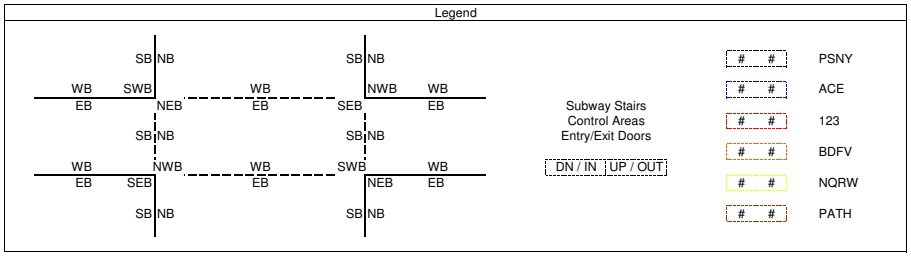

2014 Gimbels Passageway Capture Adjustment
AM Peak 15 Minutes
33S +# Total

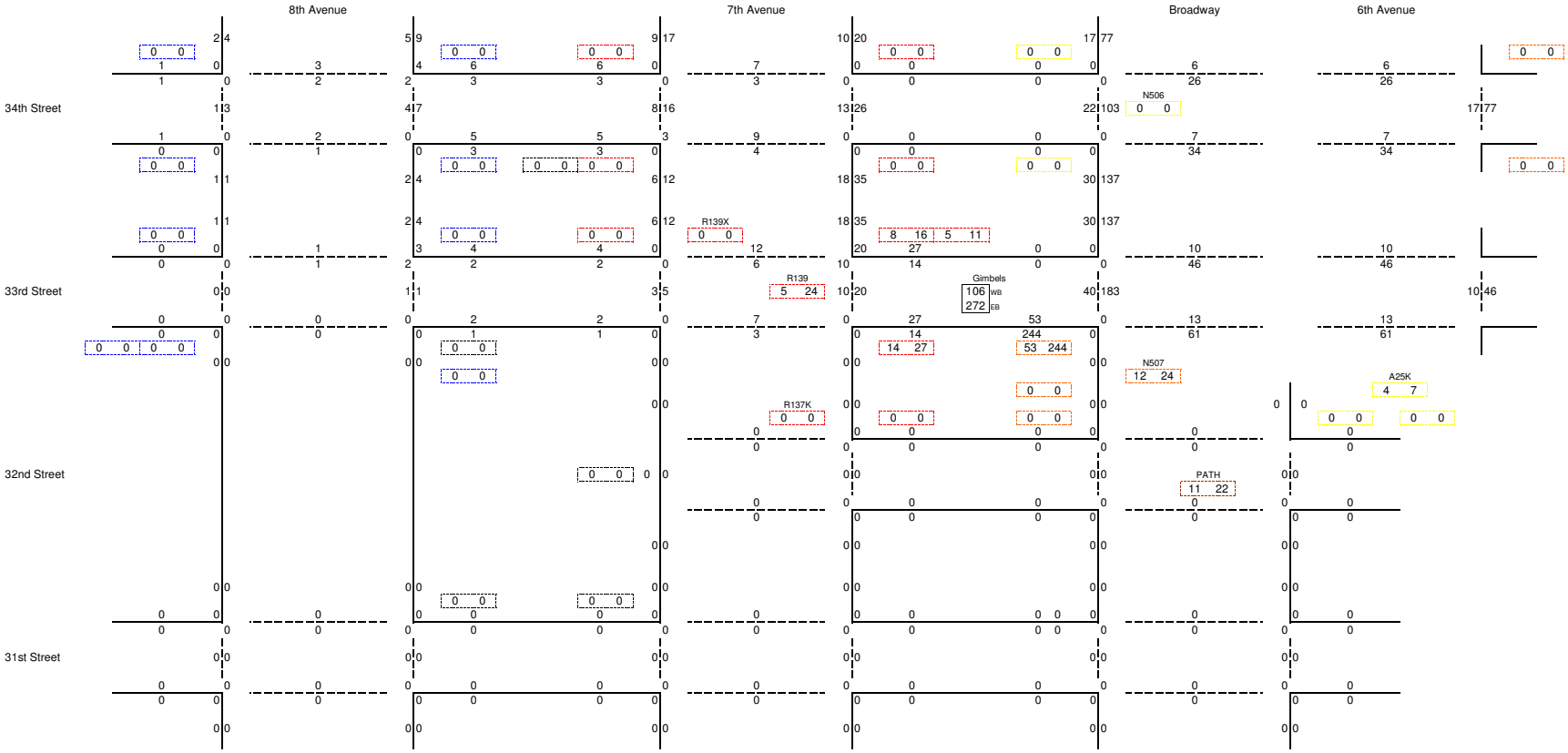

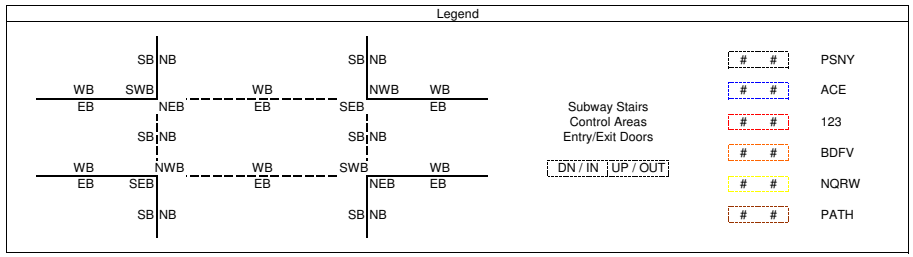

2014 Gimbels Passageway Capture Adjustment
AM Peak 15 Minutes
33S Total

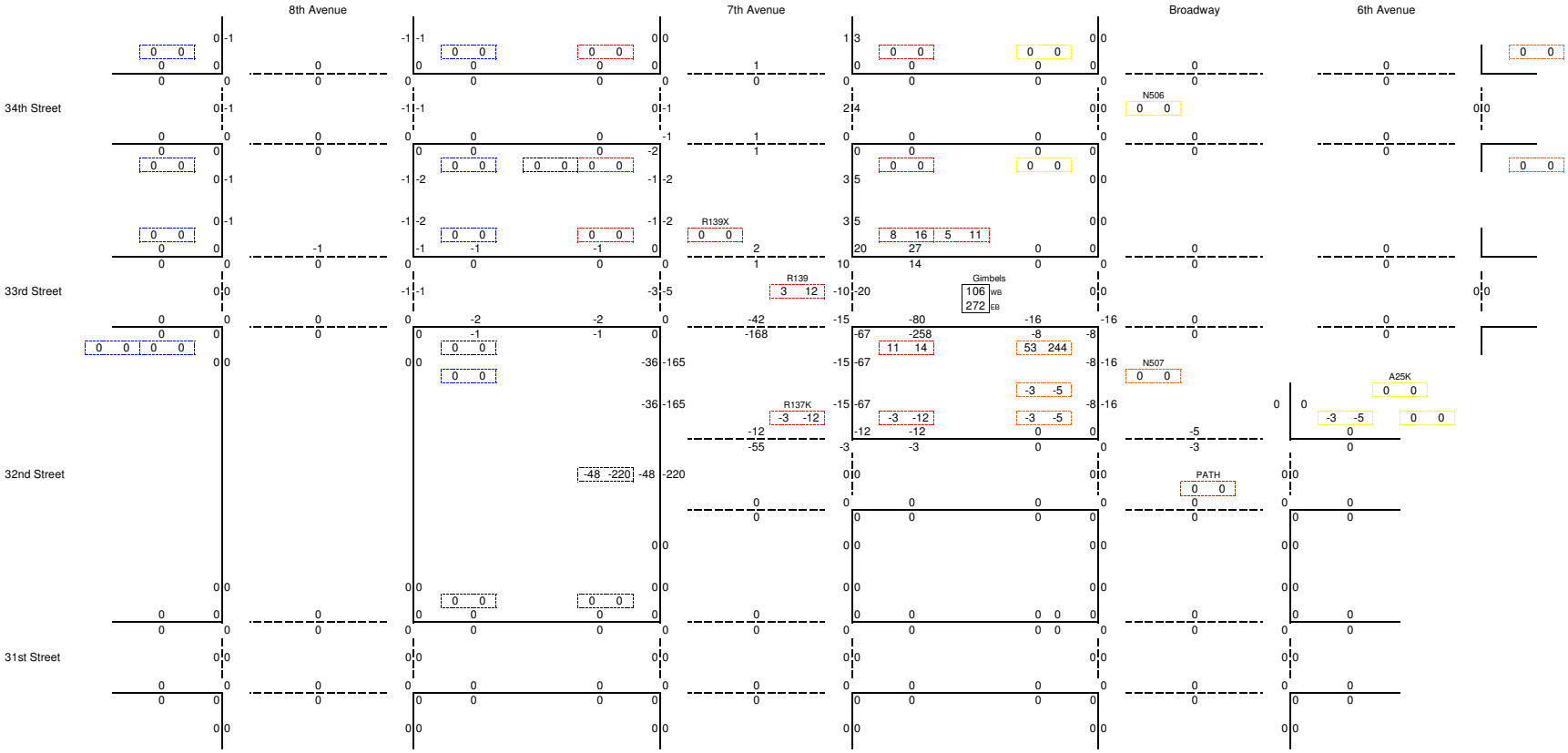

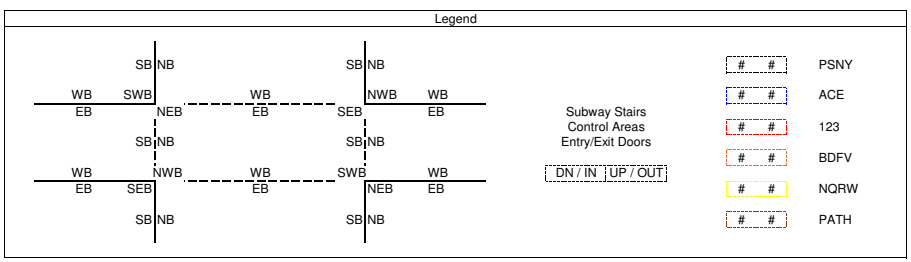

2014 Gimbels Passageway Capture Adjustment
AM Peak 15 Minutes
32N -# Total

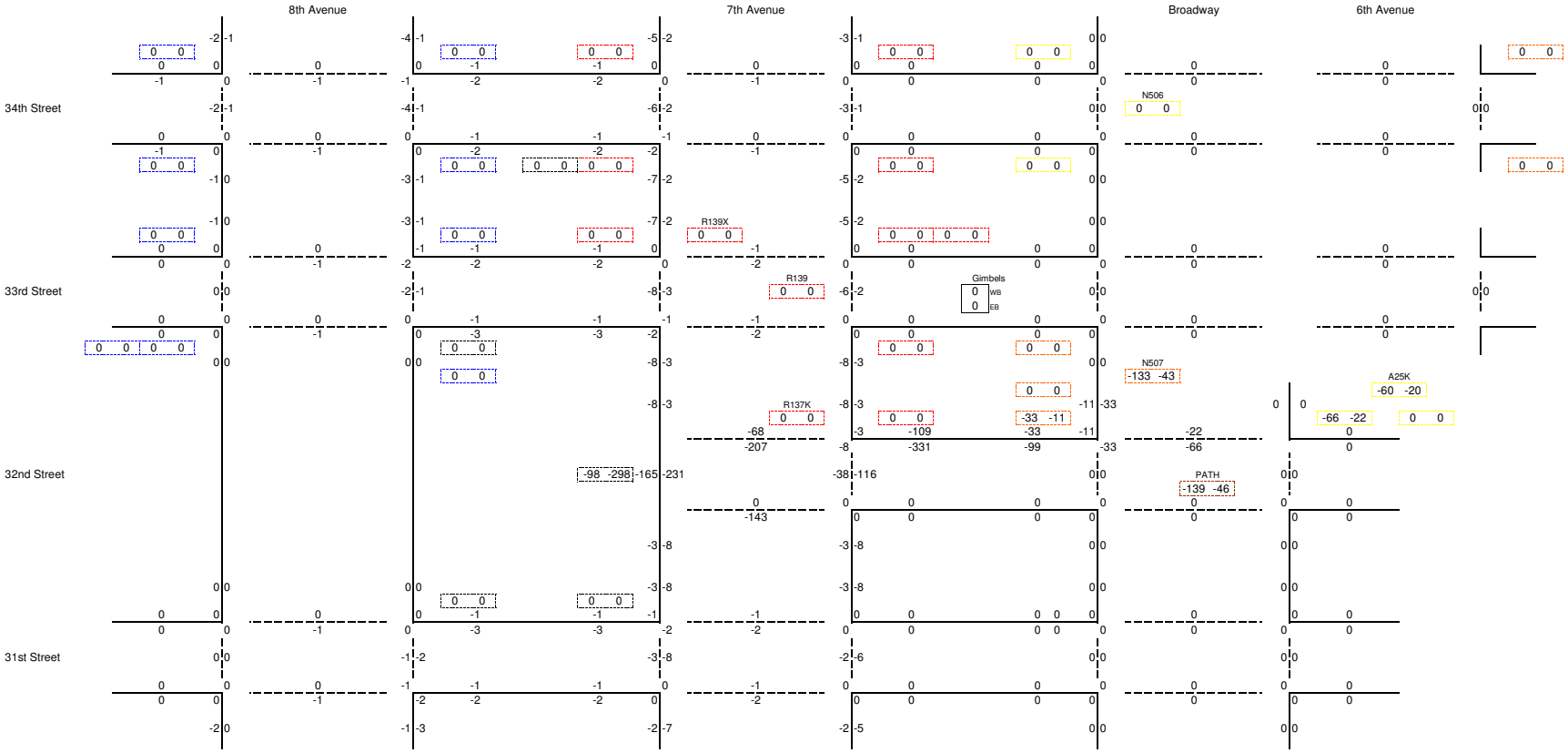

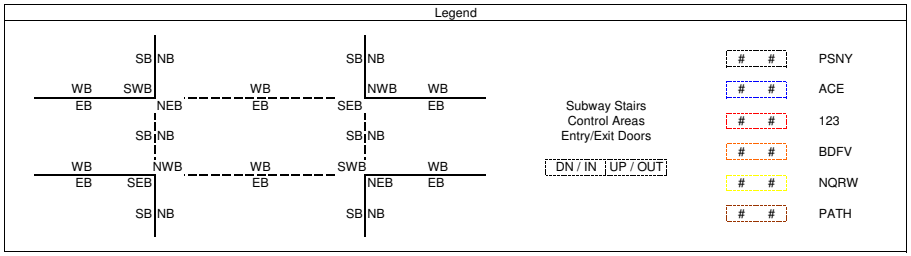

2014 Gimbels Passageway Capture Adjustment
AM Peak 15 Minutes
32N +# Total

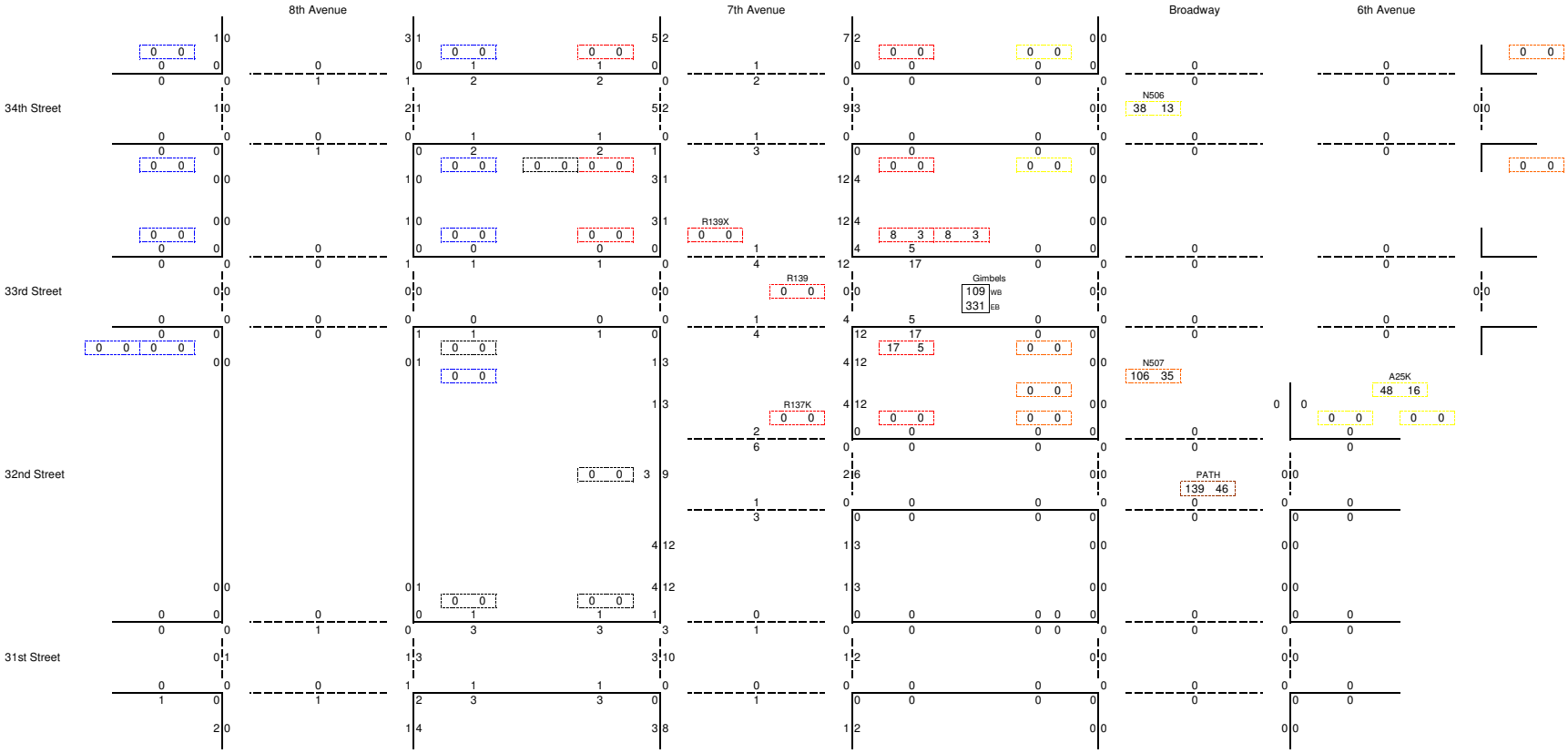

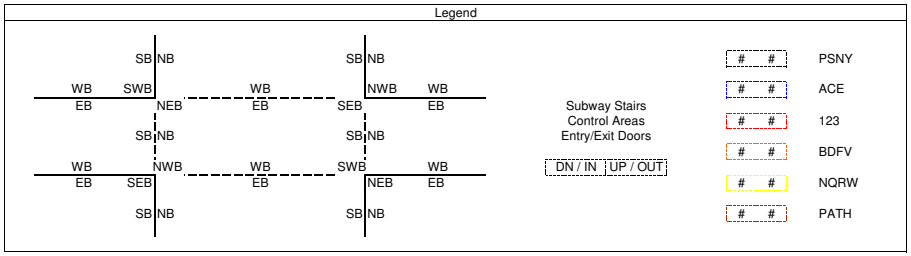

2014 Gimbels Passageway Capture Adjustment
AM Peak 15 Minutes
32N Total

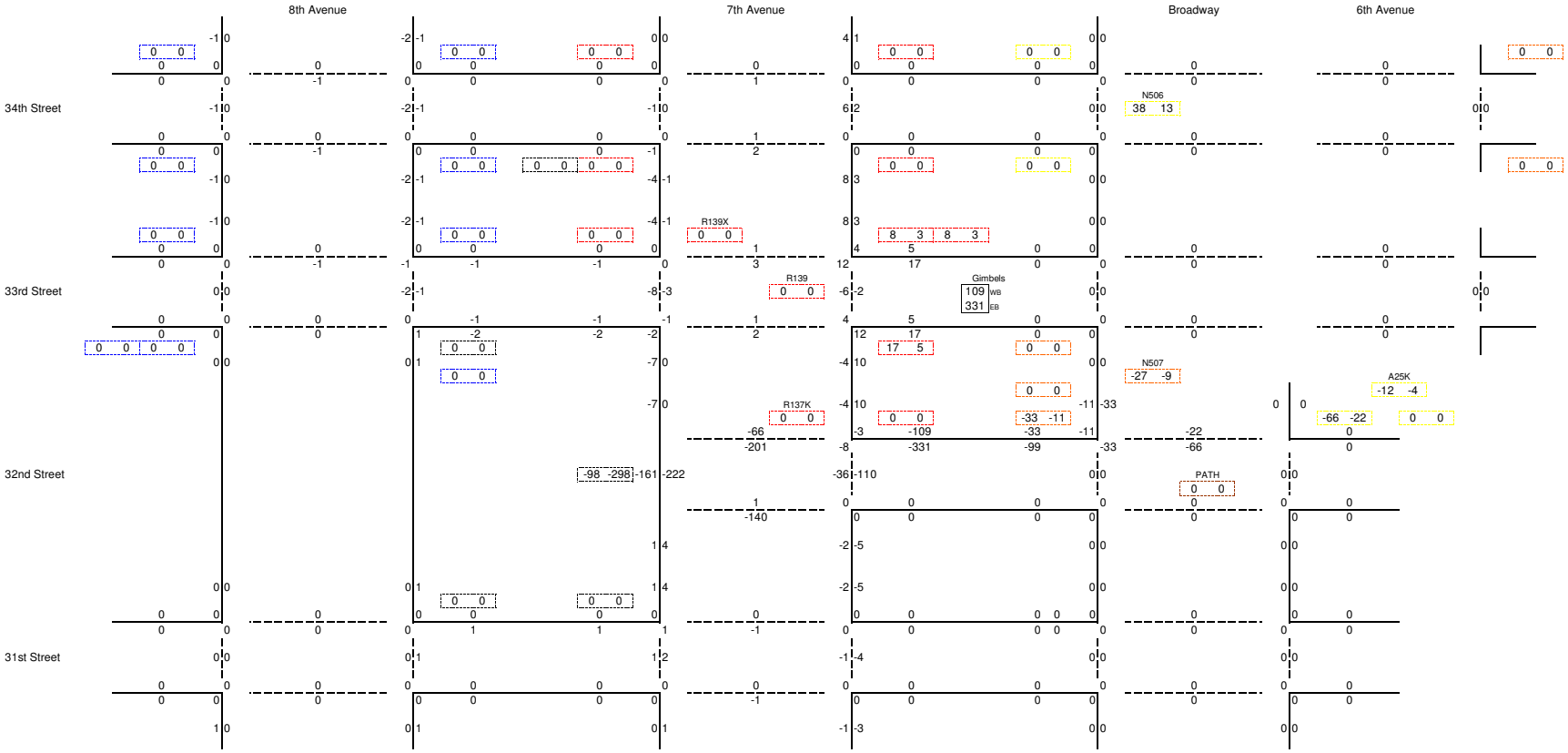

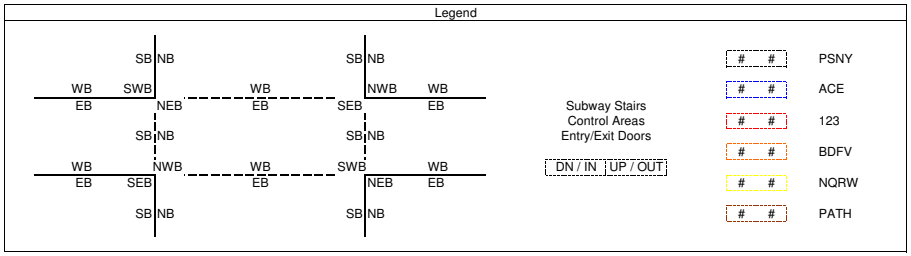

2014 Gimbels Passageway Capture Adjustment
AM Peak 15 Minutes
32S -# Total

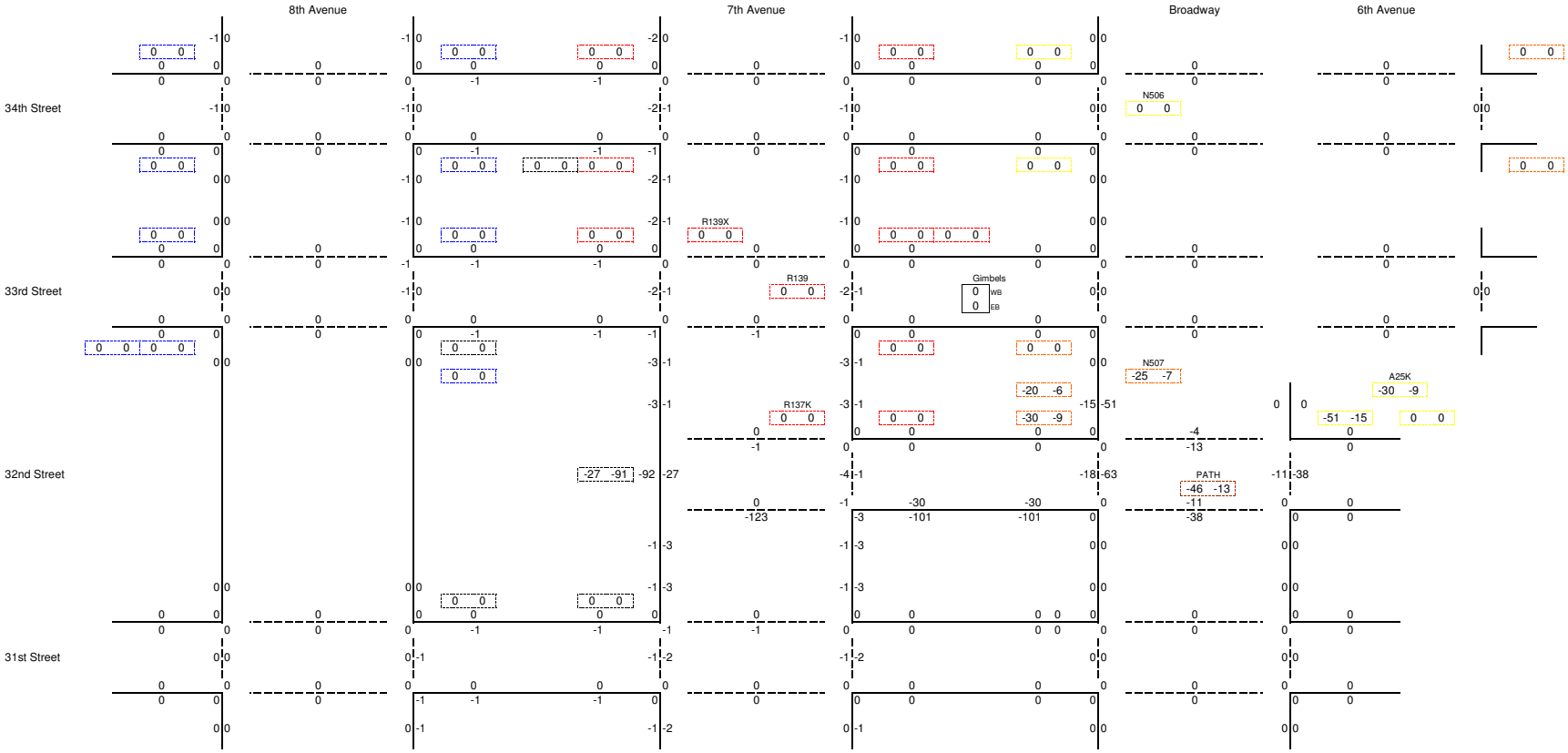

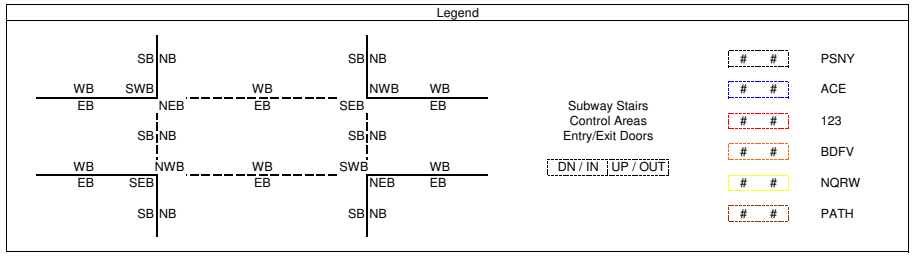

2014 Gimbels Passageway Capture Adjustment
AM Peak 15 Minutes
32S +# Total

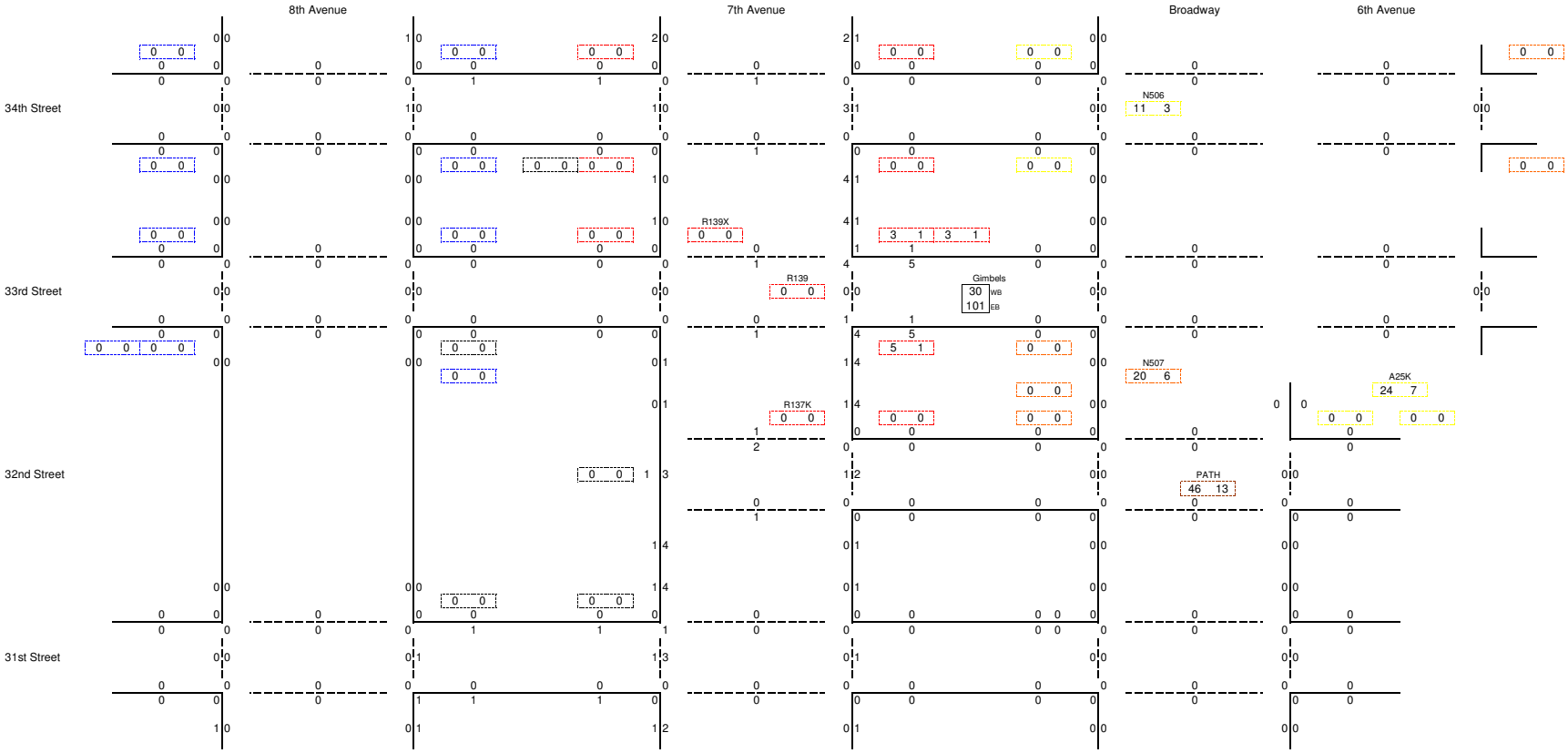

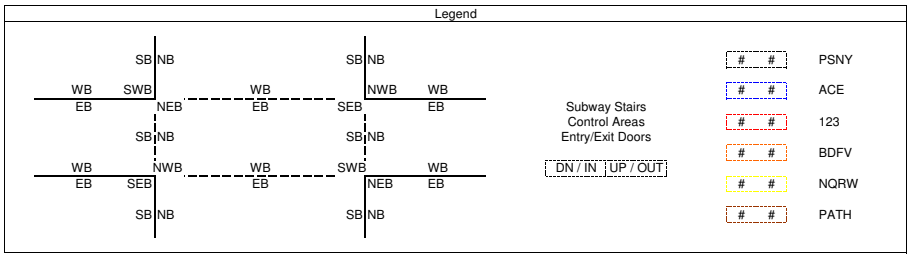

2014 Gimbels Passageway Capture Adjustment
AM Peak 15 Minutes
32S Total

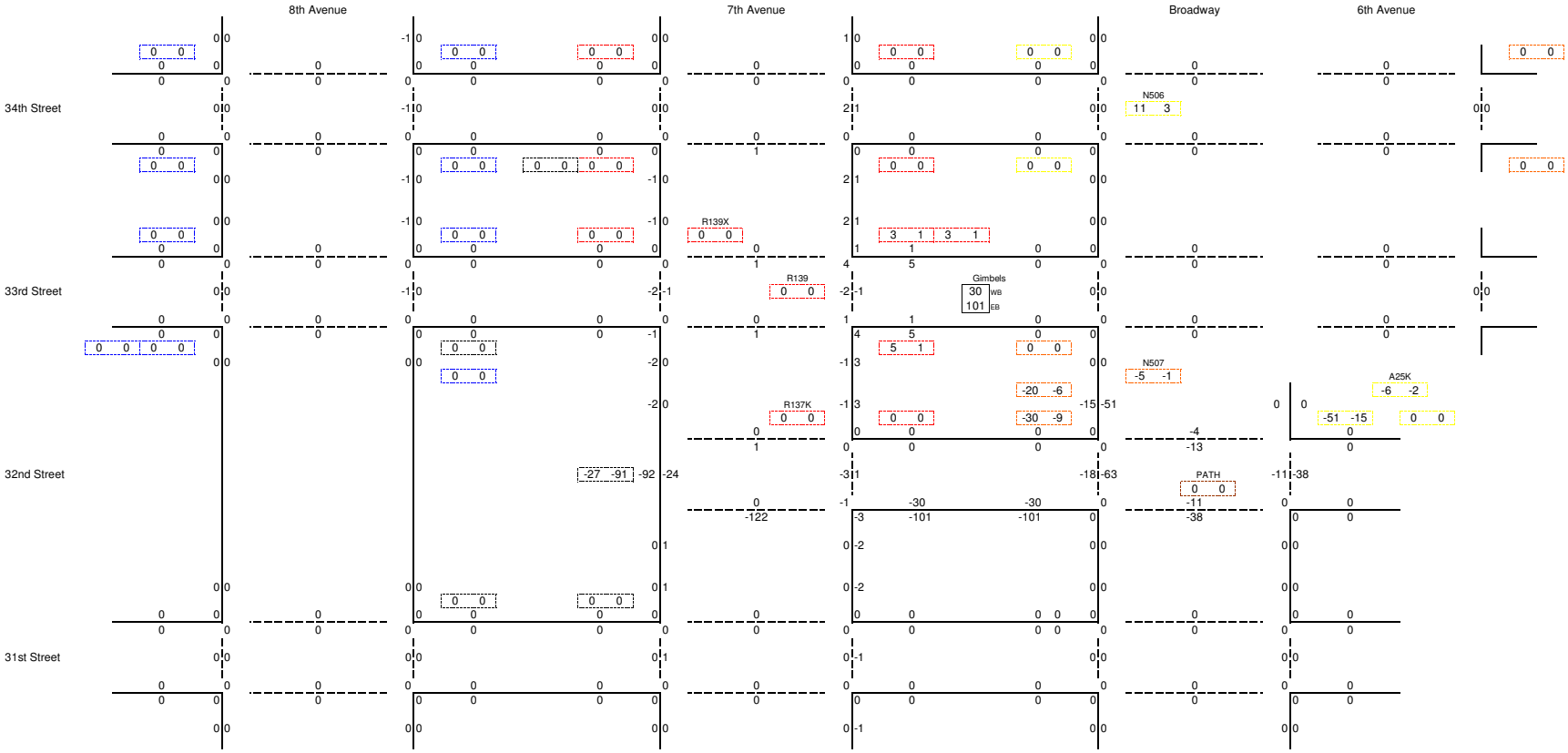

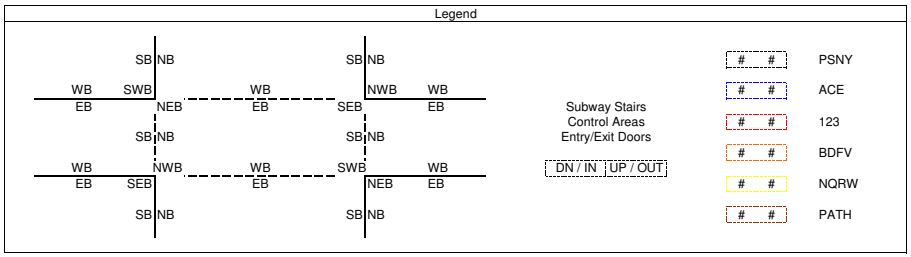

2014 Gimbels Passageway Capture Adjustment
AM Peak 15 Minutes
Total Adjustment

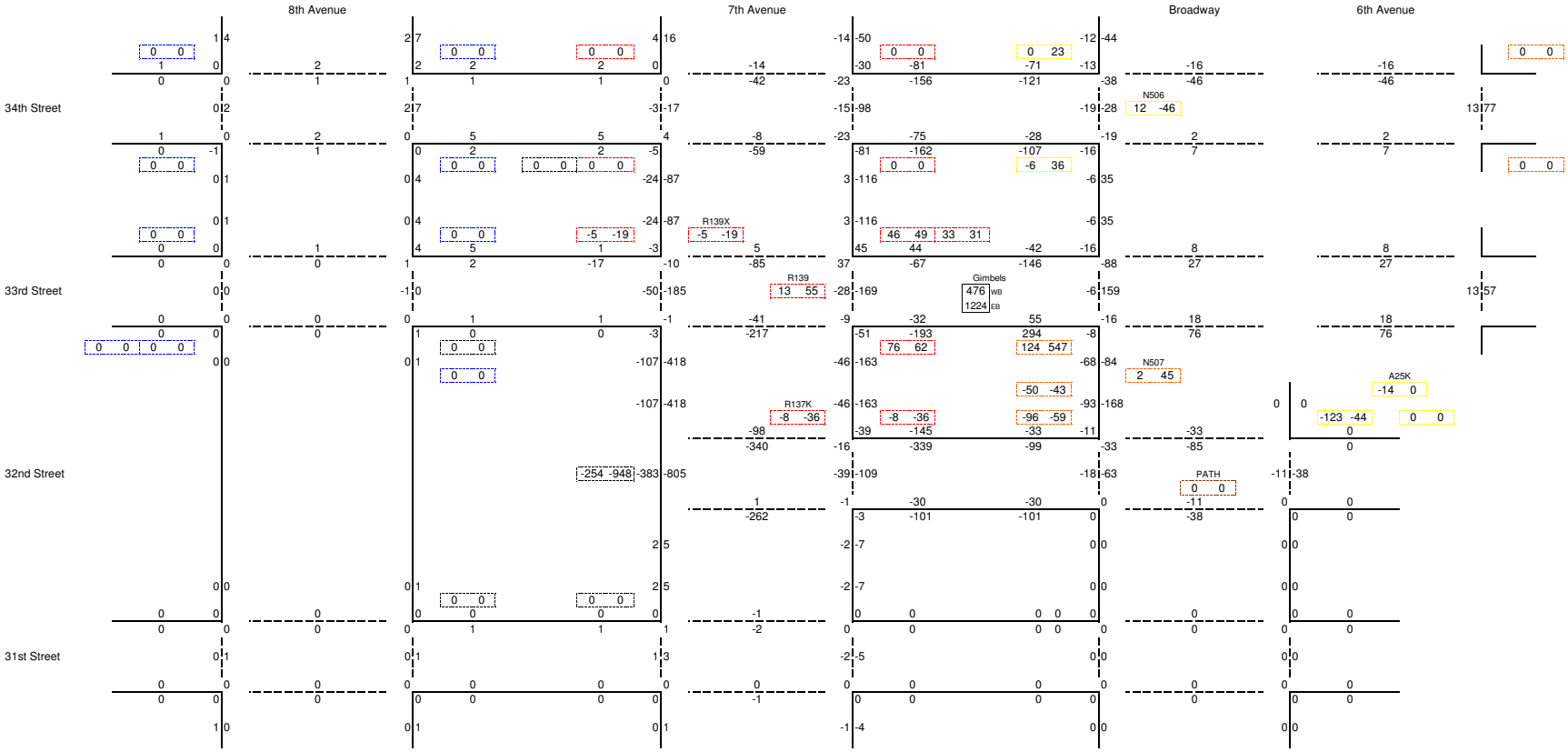

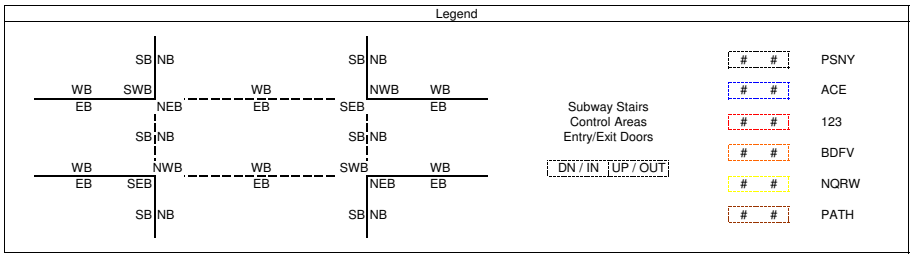

2014 Gimbels Passageway Capture Adjustment
MD Peak 15 Minutes
35-37 -# Total

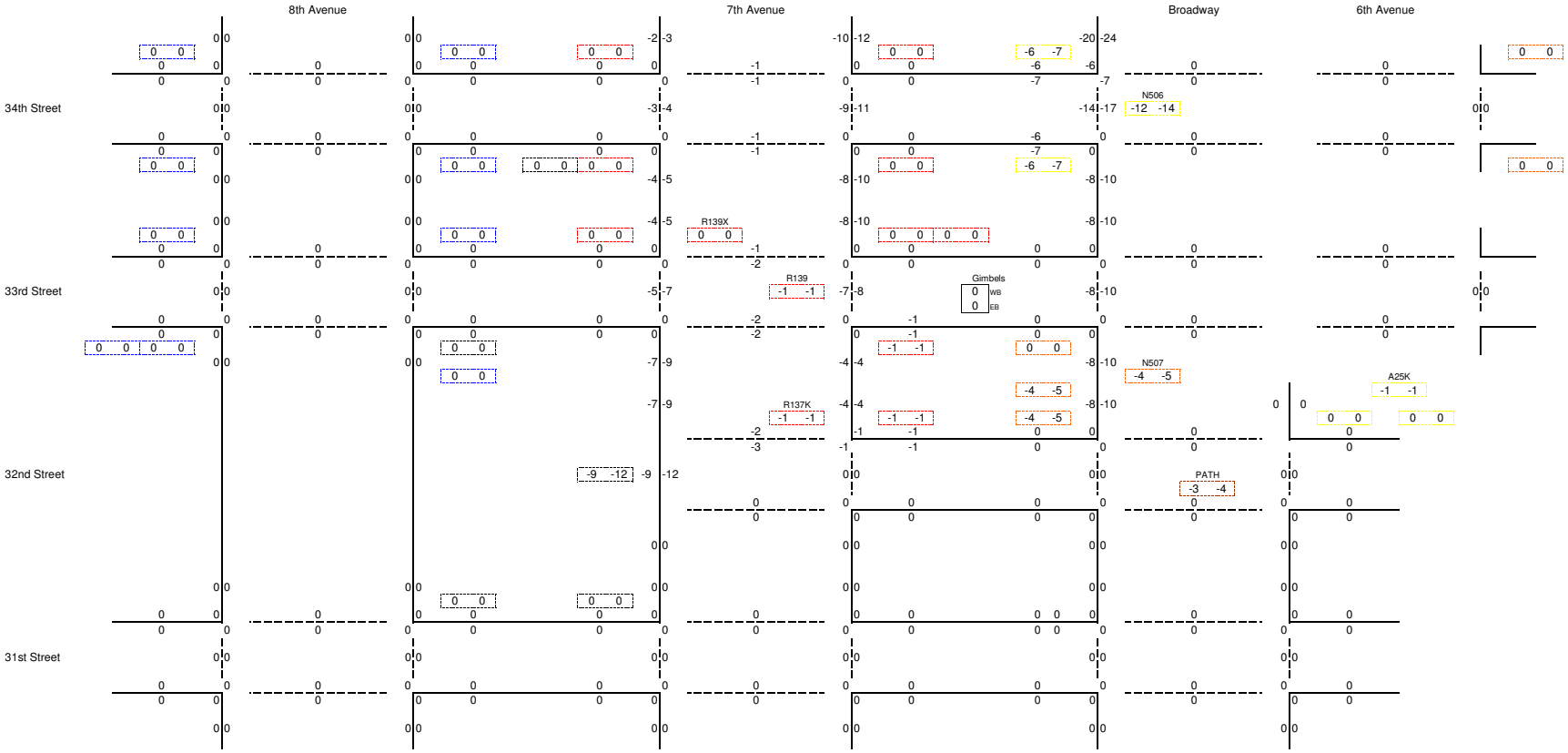

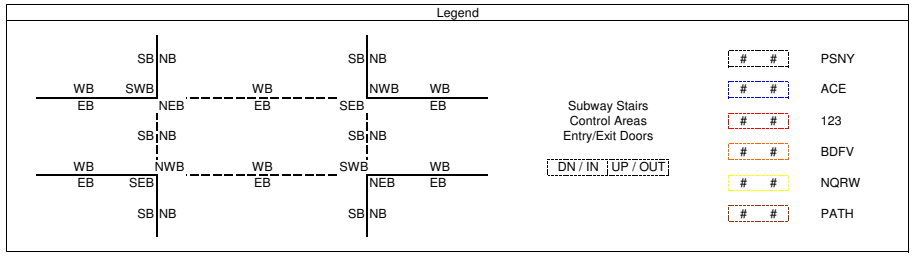

2014 Gimbels Passageway Capture Adjustment
MD Peak 15 Minutes
35-37 +# Total

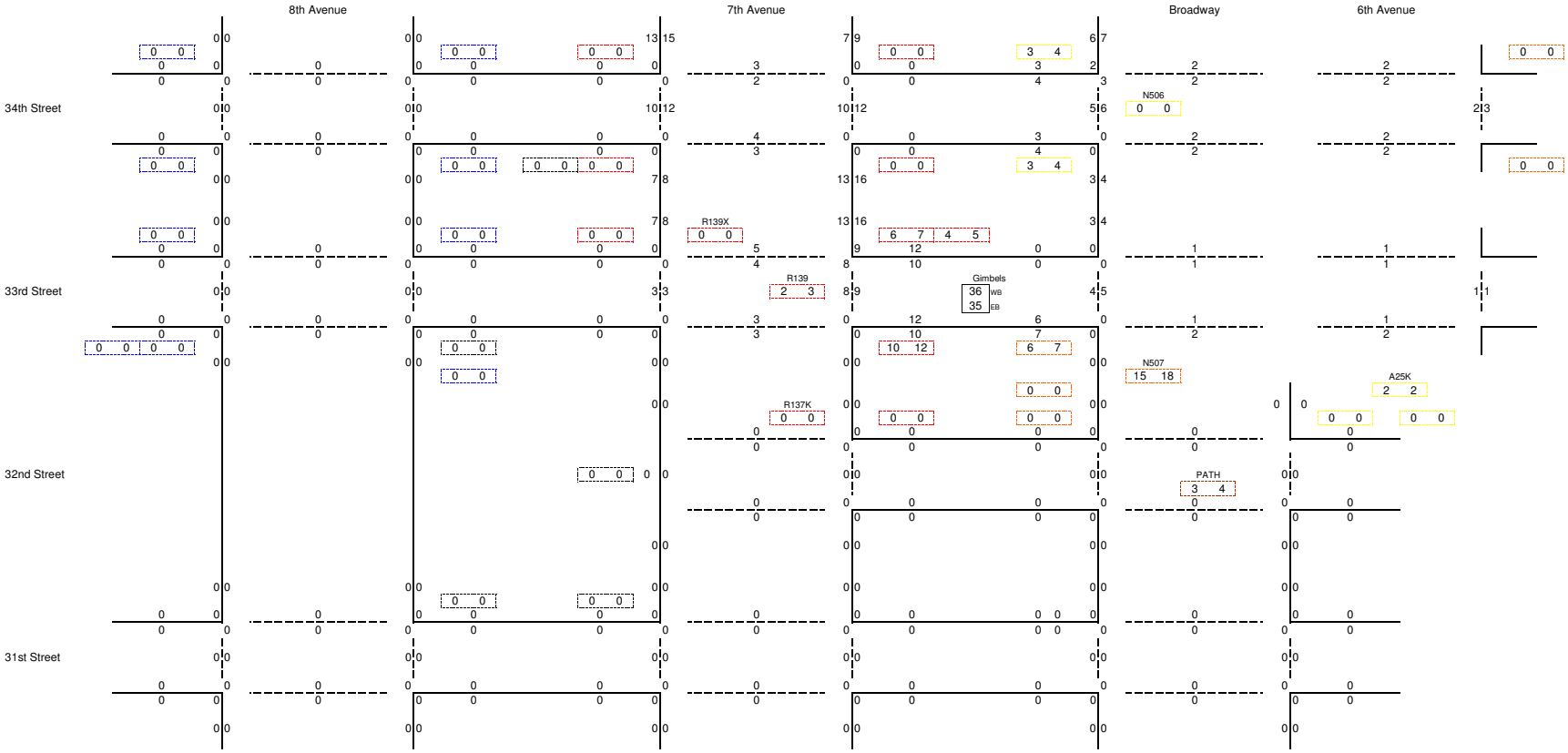

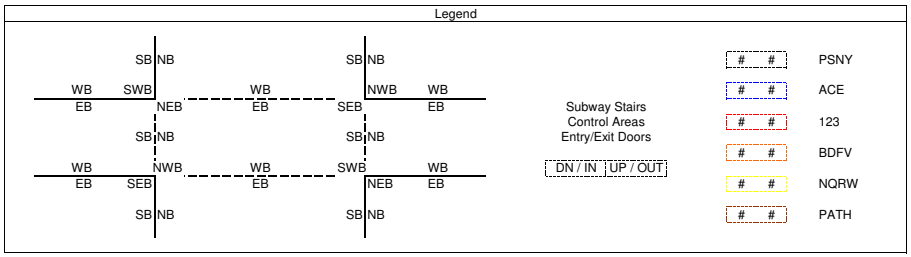

2014 Gimbels Passageway Capture Adjustment
MD Peak 15 Minutes
35-37 Total

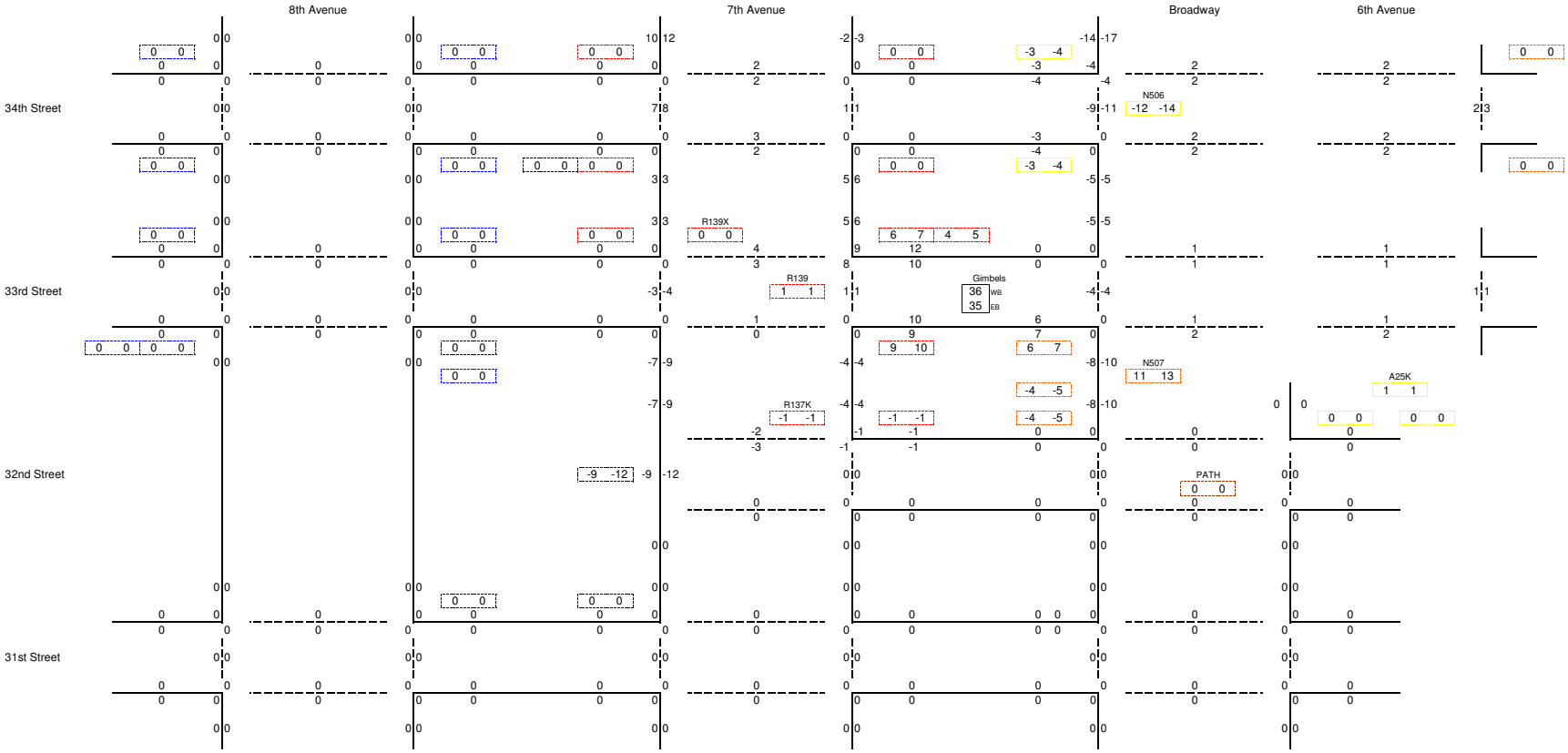

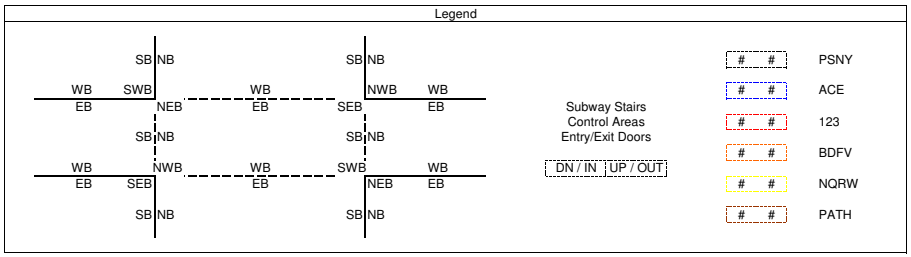

2014 Gimbels Passageway Capture Adjustment
MD Peak 15 Minutes
34N -# Total

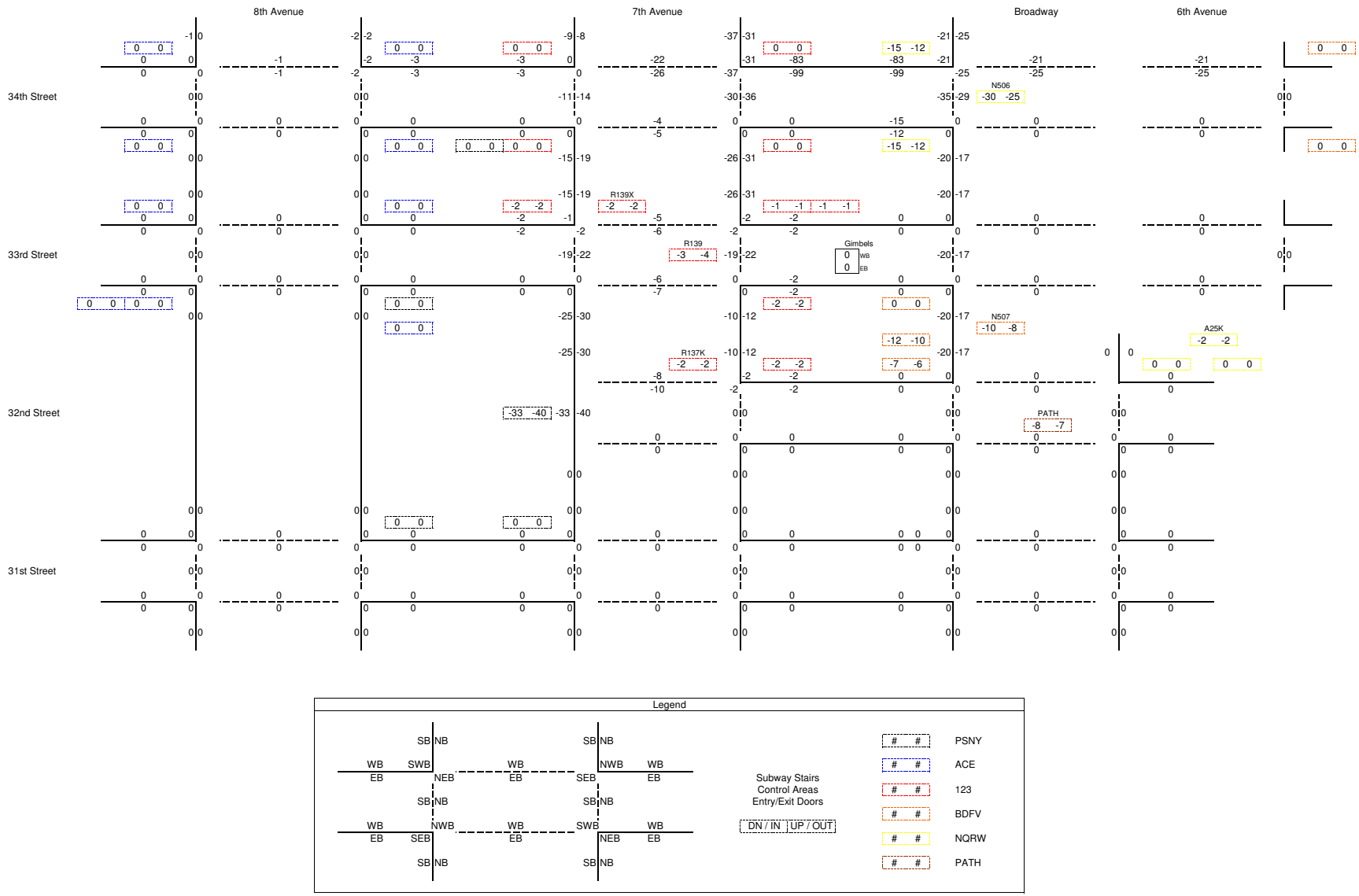

2014 Gimbels Passageway Capture Adjustment
MD Peak 15 Minutes
34N +# Total

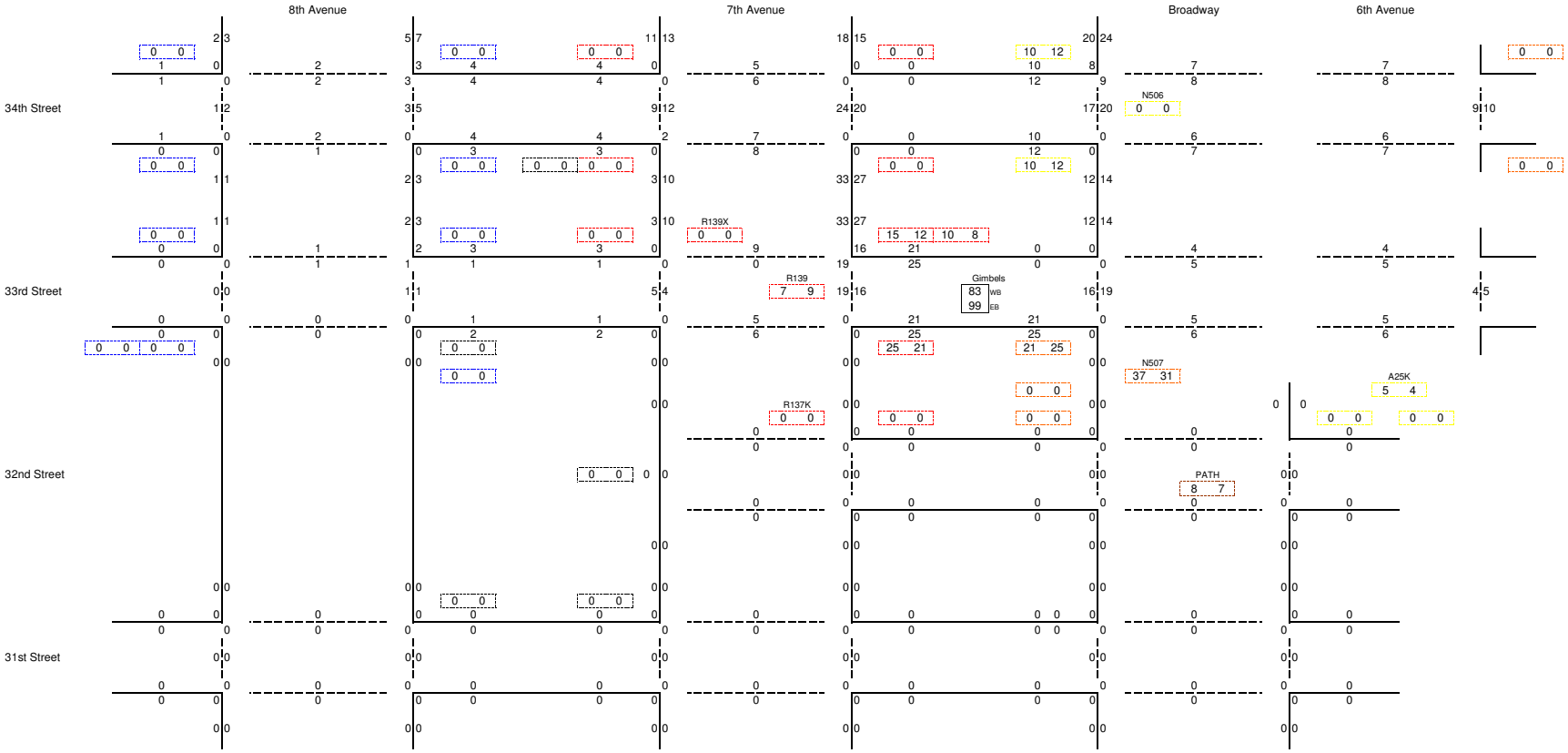

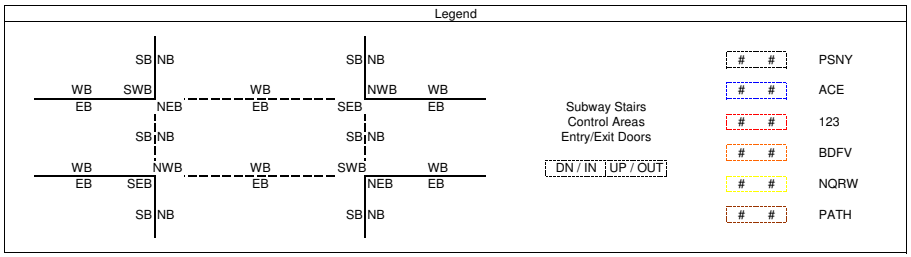

2014 Gimbels Passageway Capture Adjustment
MD Peak 15 Minutes
34N Total

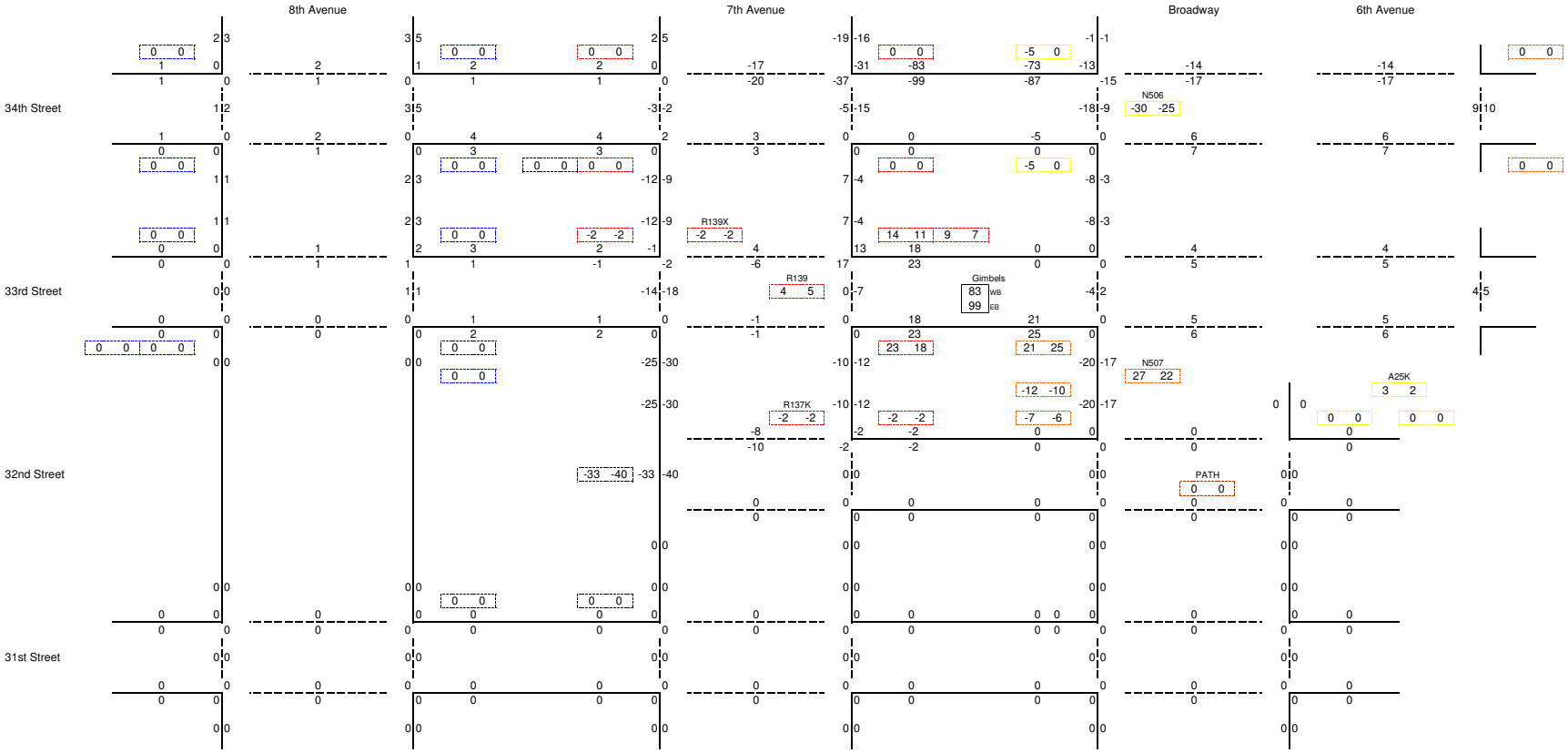

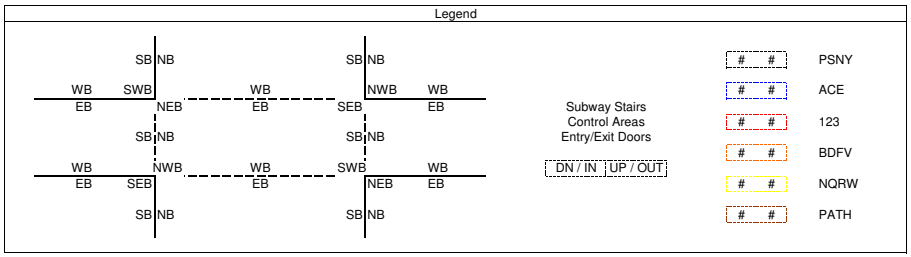

2014 Gimbels Passageway Capture Adjustment
MD Peak 15 Minutes
34S -# Total

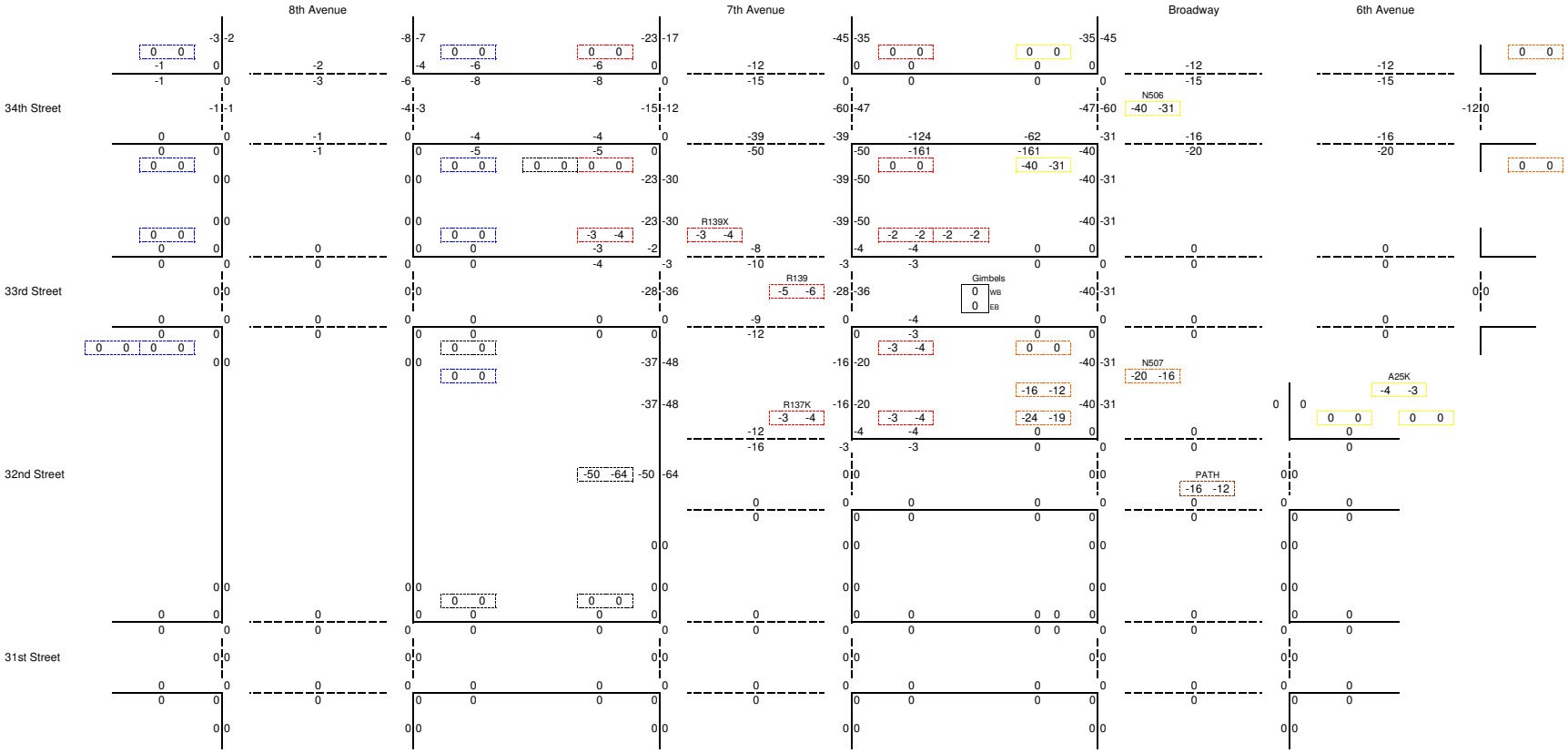

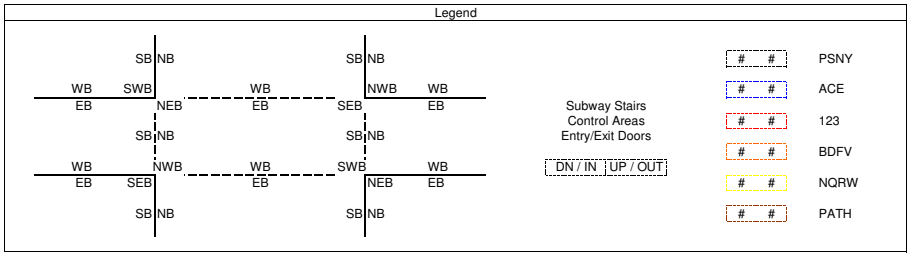

2014 Gimbels Passageway Capture Adjustment
MD Peak 15 Minutes
34S +# Total

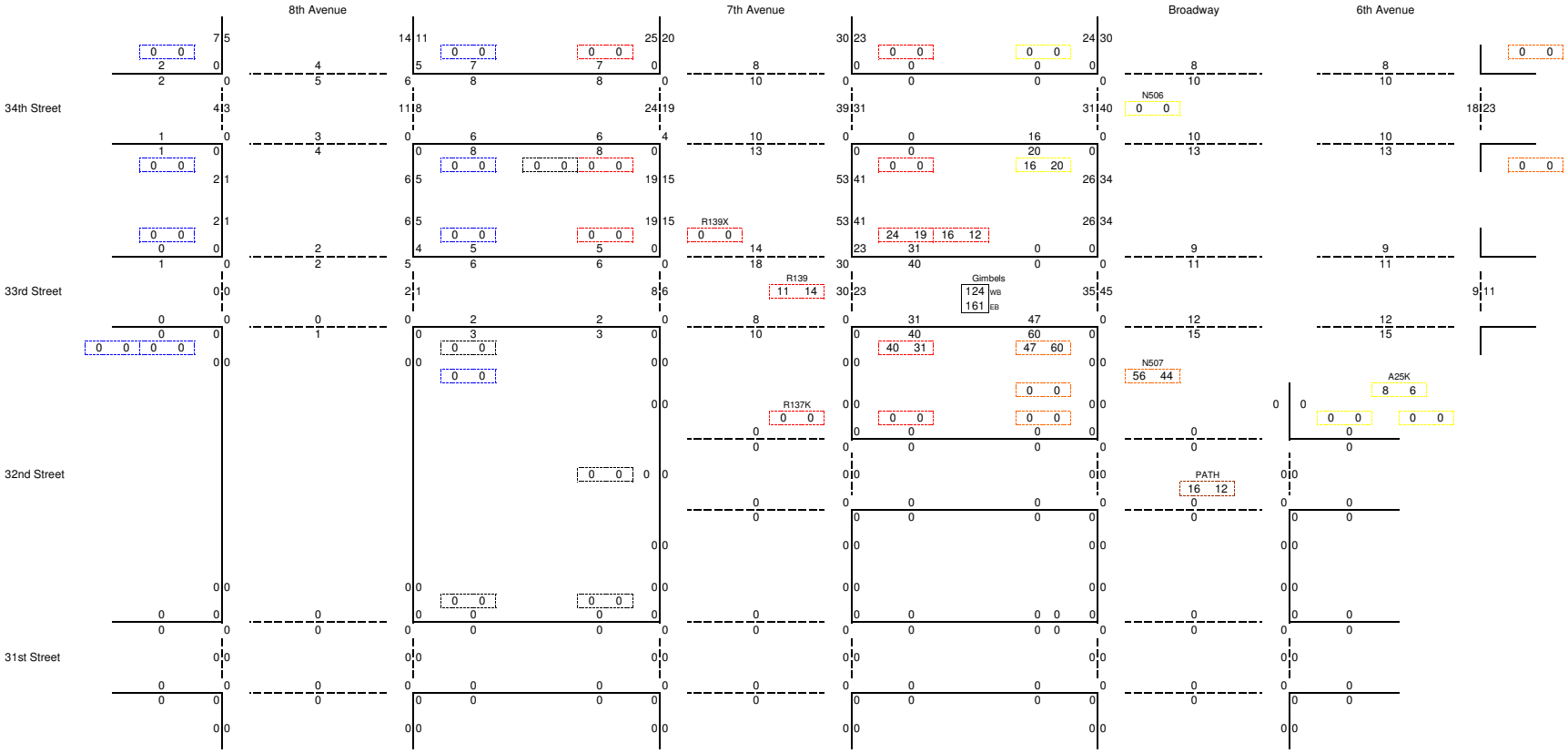

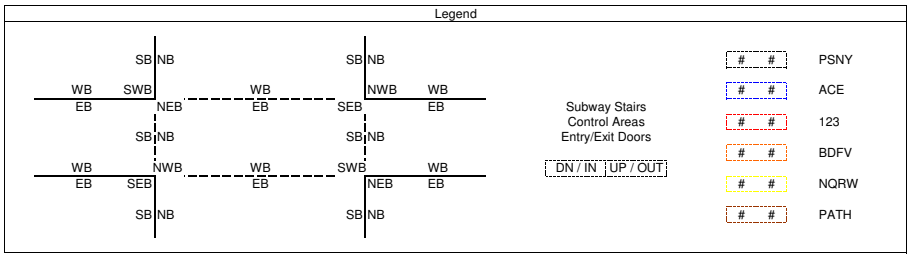

2014 Gimbels Passageway Capture Adjustment
MD Peak 15 Minutes
34S Total

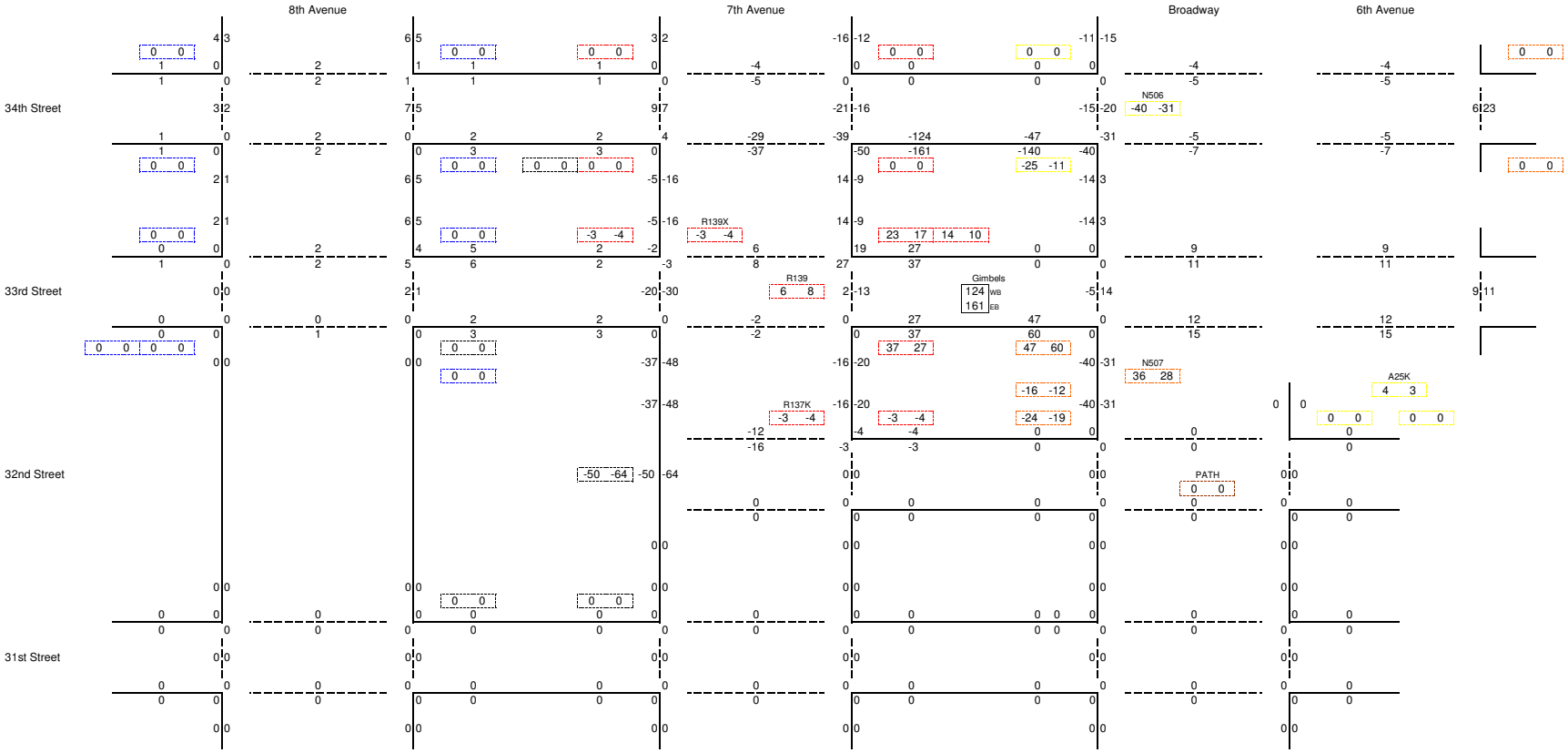

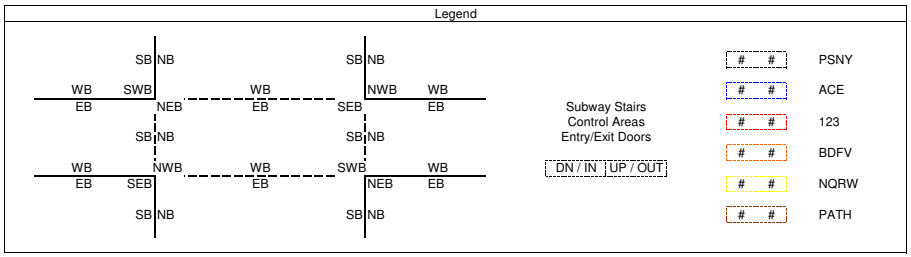

2014 Gimbels Passageway Capture Adjustment
MD Peak 15 Minutes
33N -# Total

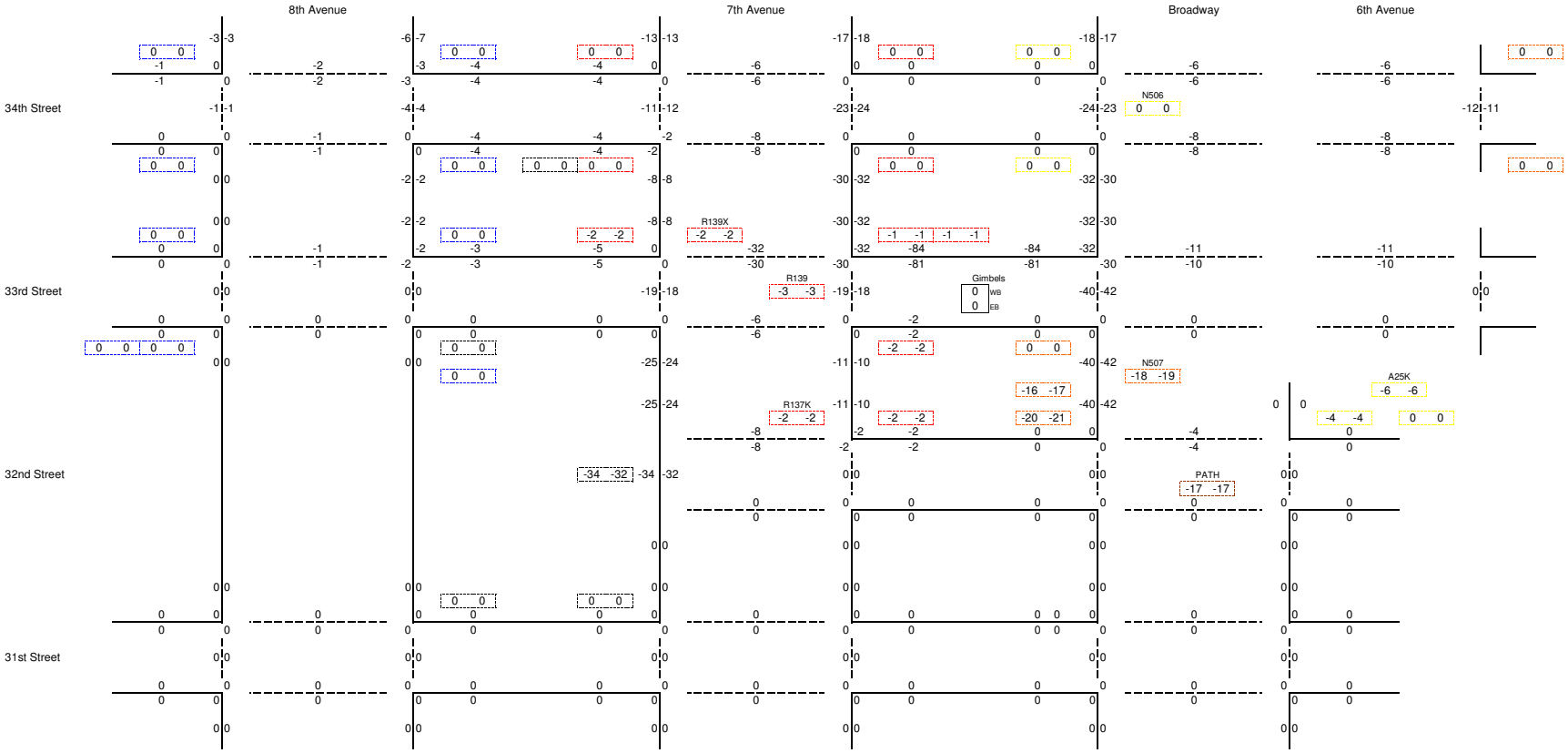

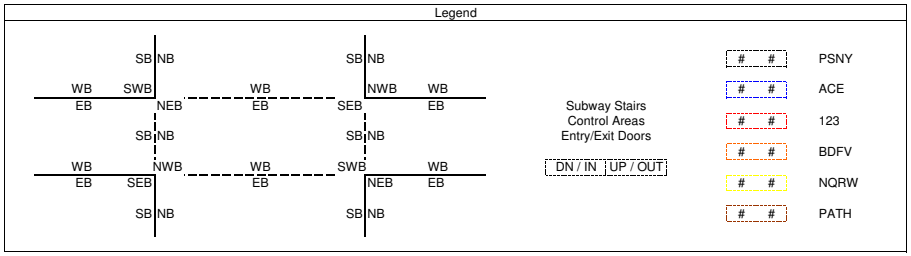

2014 Gimbels Passageway Capture Adjustment
MD Peak 15 Minutes
33N +# Total

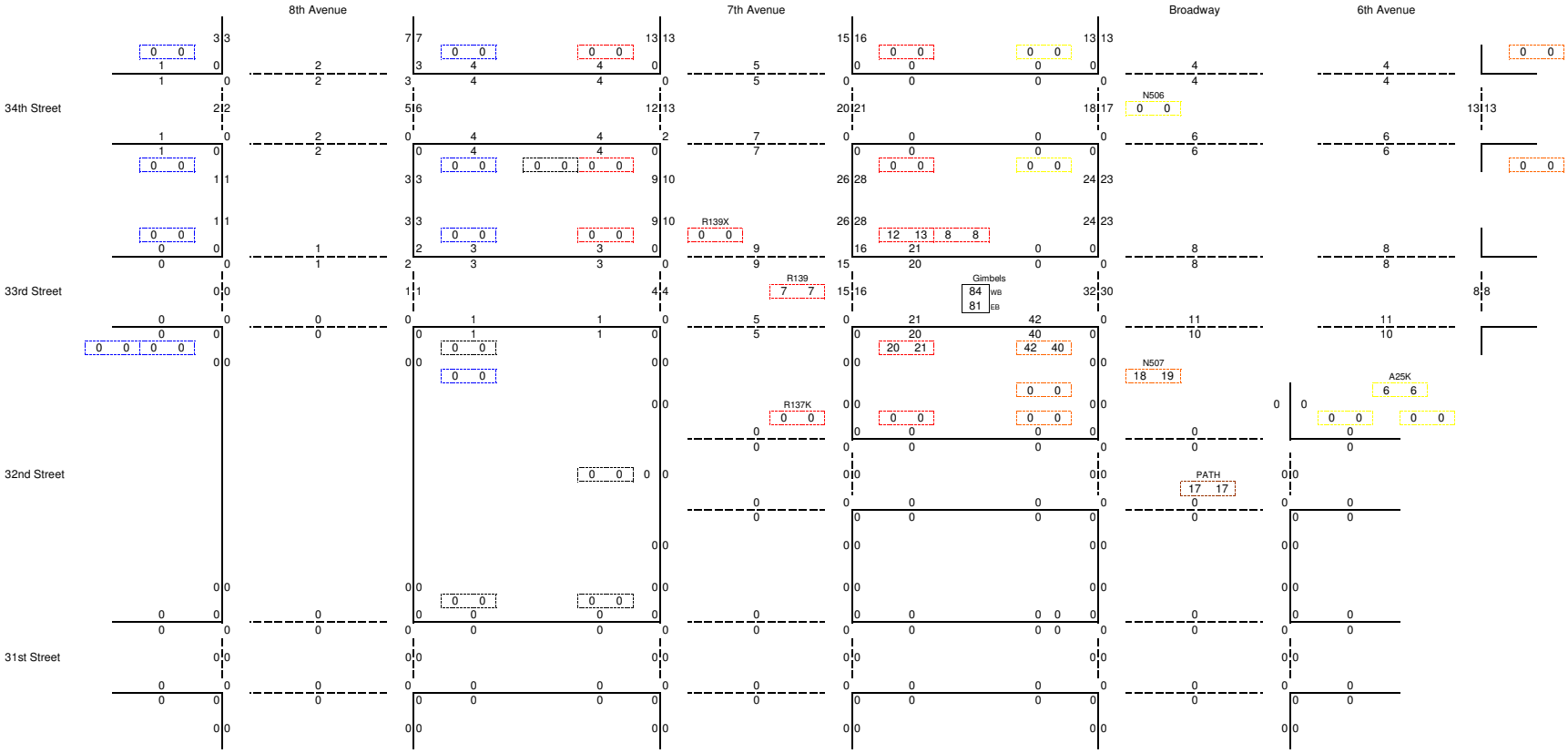

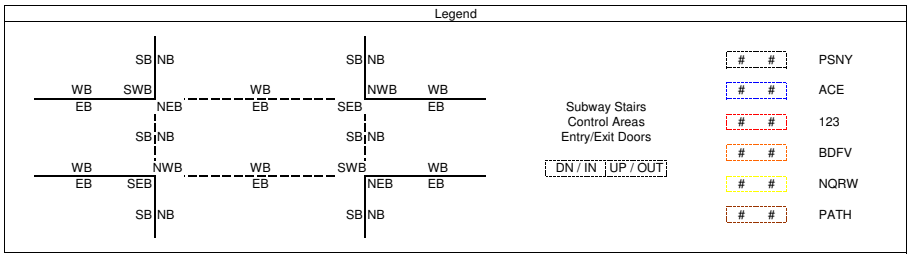

2014 Gimbels Passageway Capture Adjustment
MD Peak 15 Minutes
33N Total

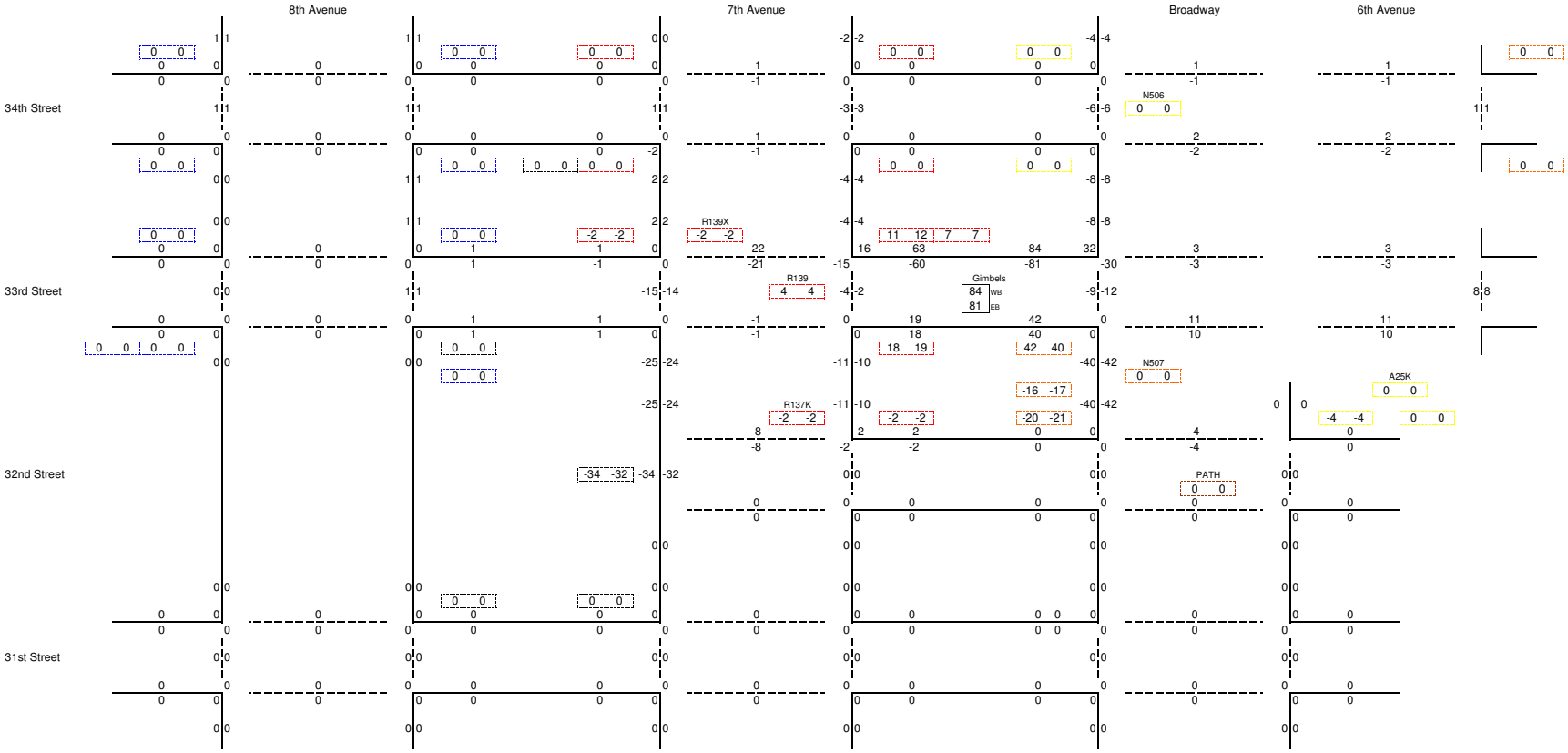

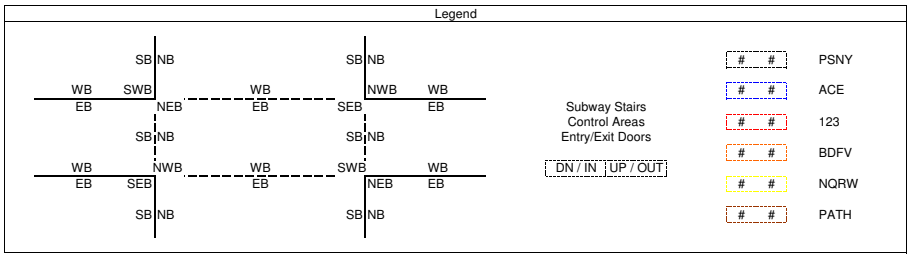

2014 Gimbels Passageway Capture Adjustment
MD Peak 15 Minutes
33S -# Total

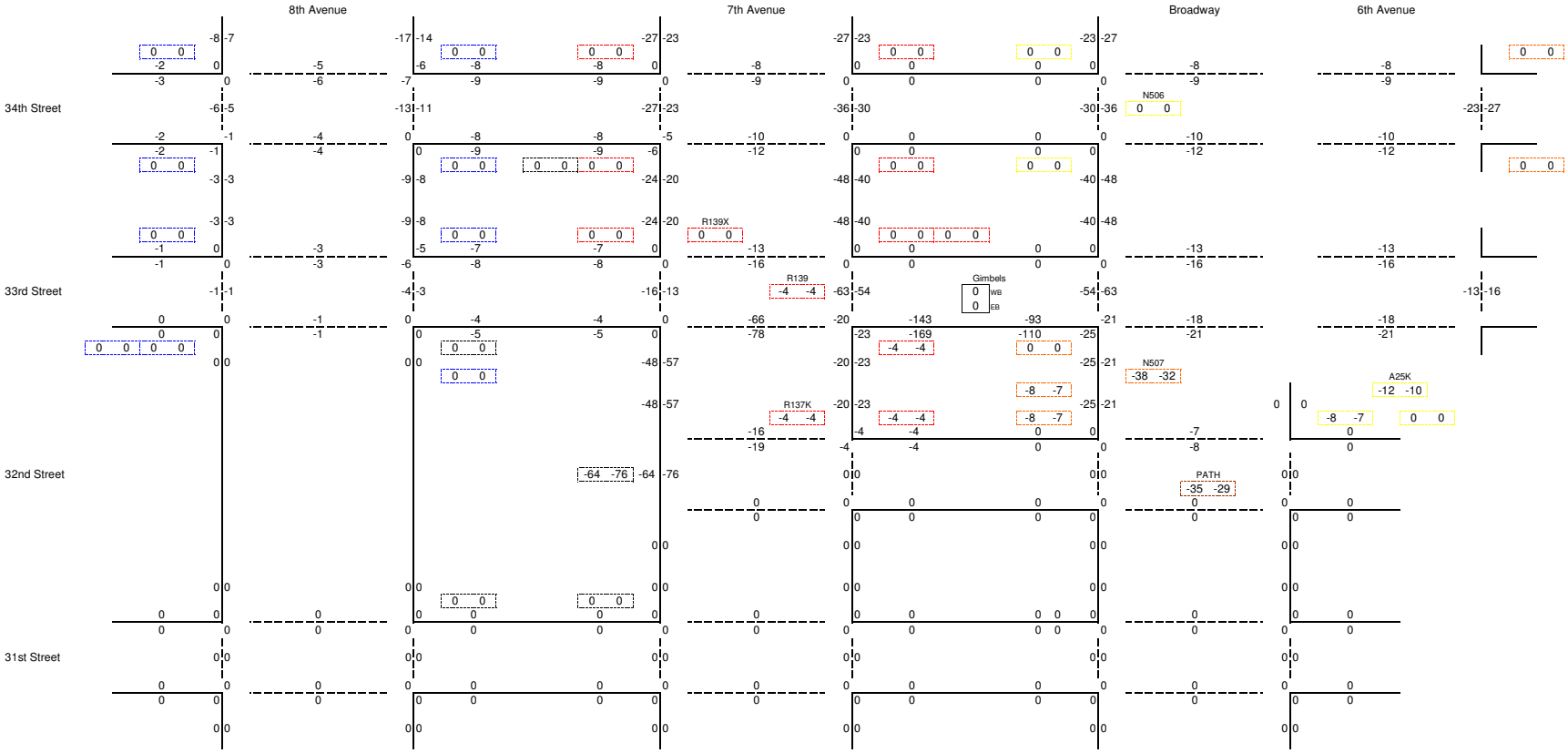

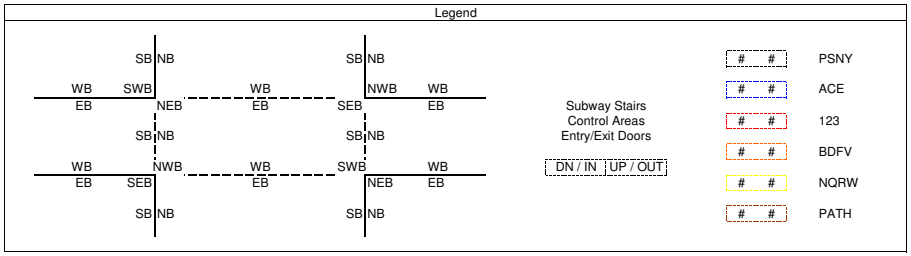

2014 Gimbels Passageway Capture Adjustment
MD Peak 15 Minutes
33S +# Total

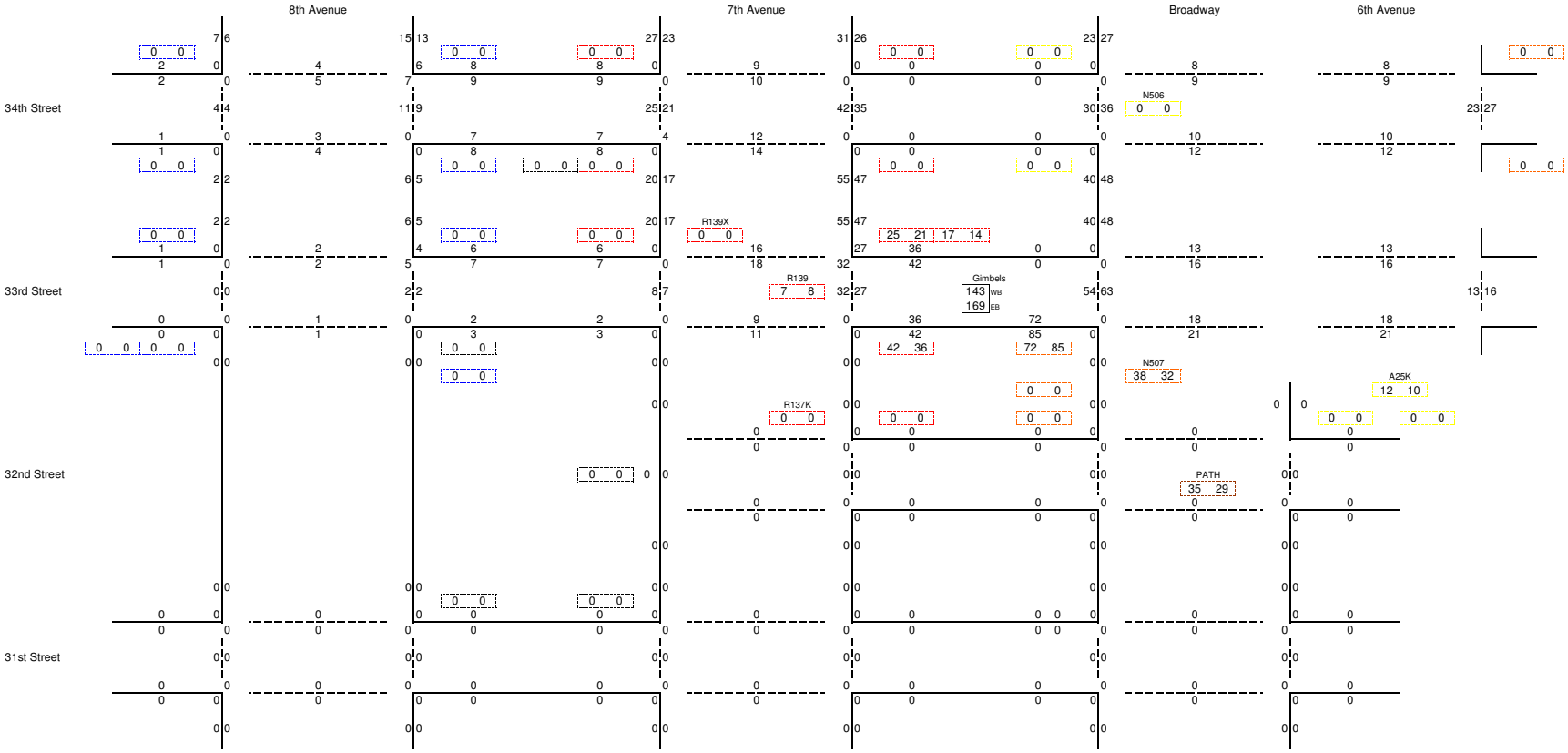

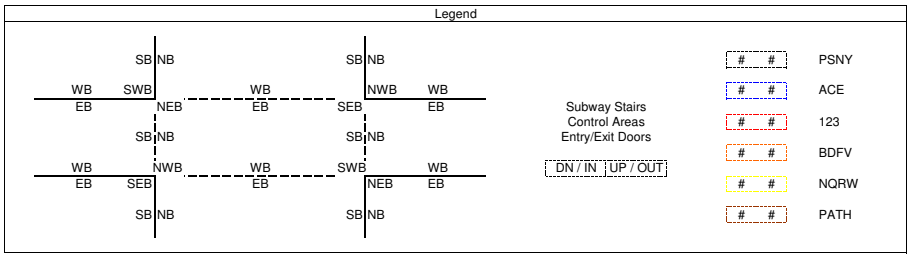

2014 Gimbels Passageway Capture Adjustment
MD Peak 15 Minutes
33S Total

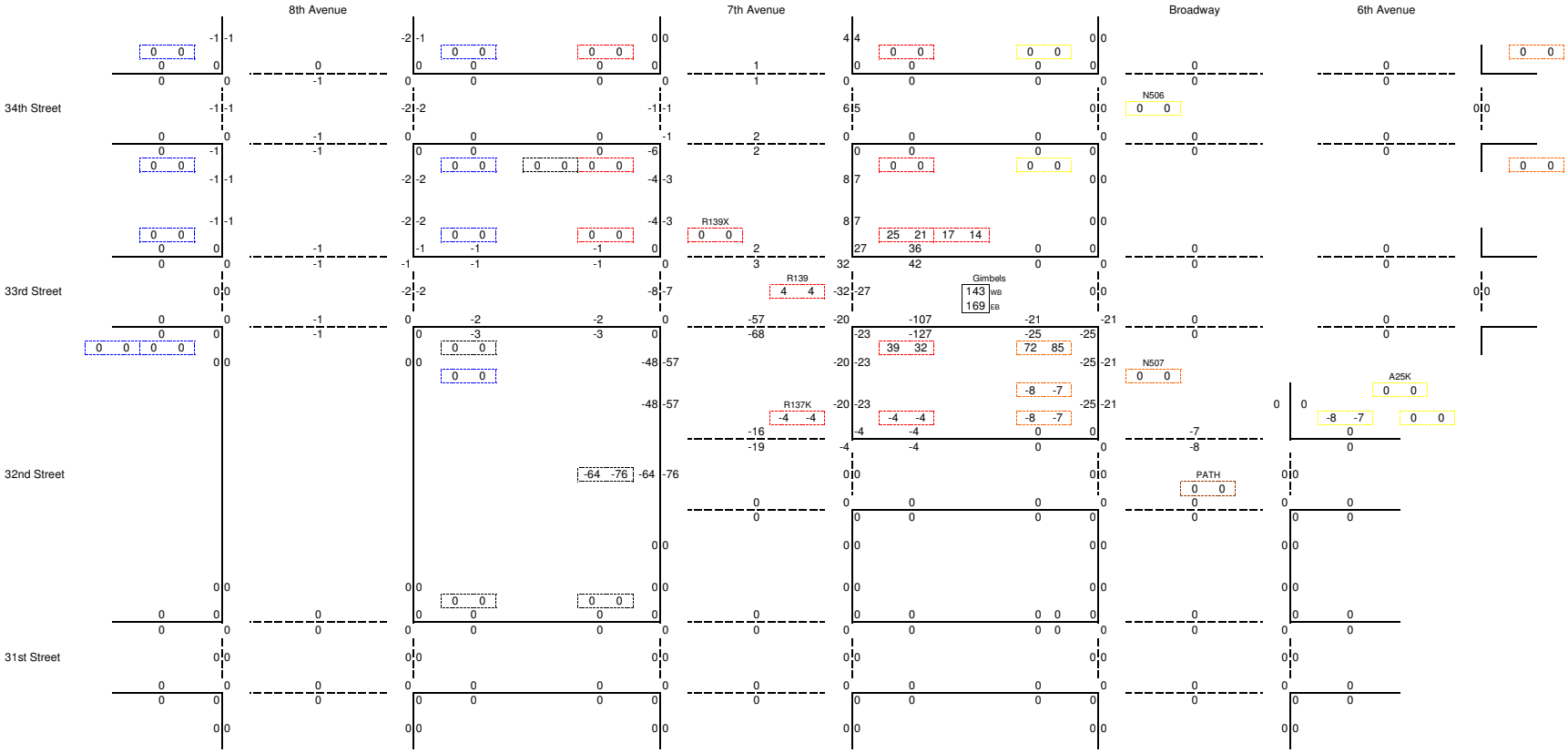

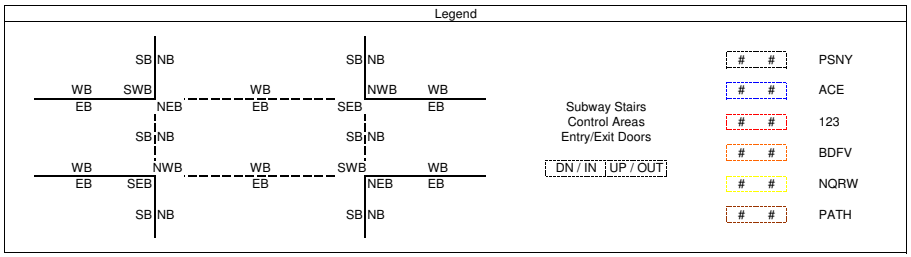

2014 Gimbels Passageway Capture Adjustment
MD Peak 15 Minutes
32N -# Total

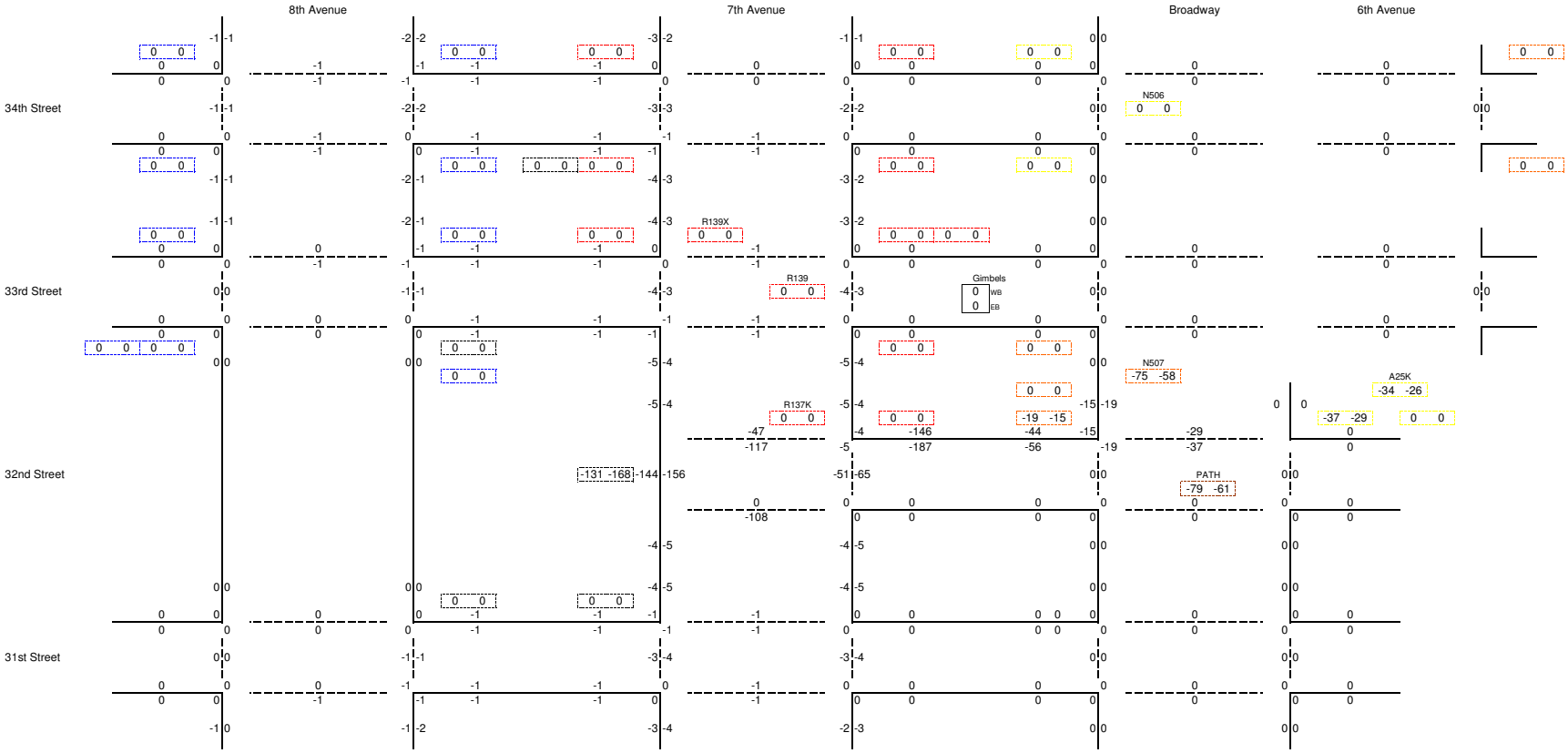

Legend

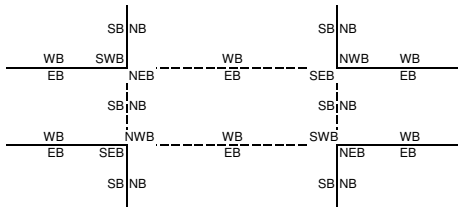

Subway Stairs
Control Areas
Entry/Exit Doors

DN / IN | UP / OUT

PSNY
ACE
123
BDFV
NQRW
PATH

2014 Gimbels Passageway Capture Adjustment
MD Peak 15 Minutes
32N +# Total

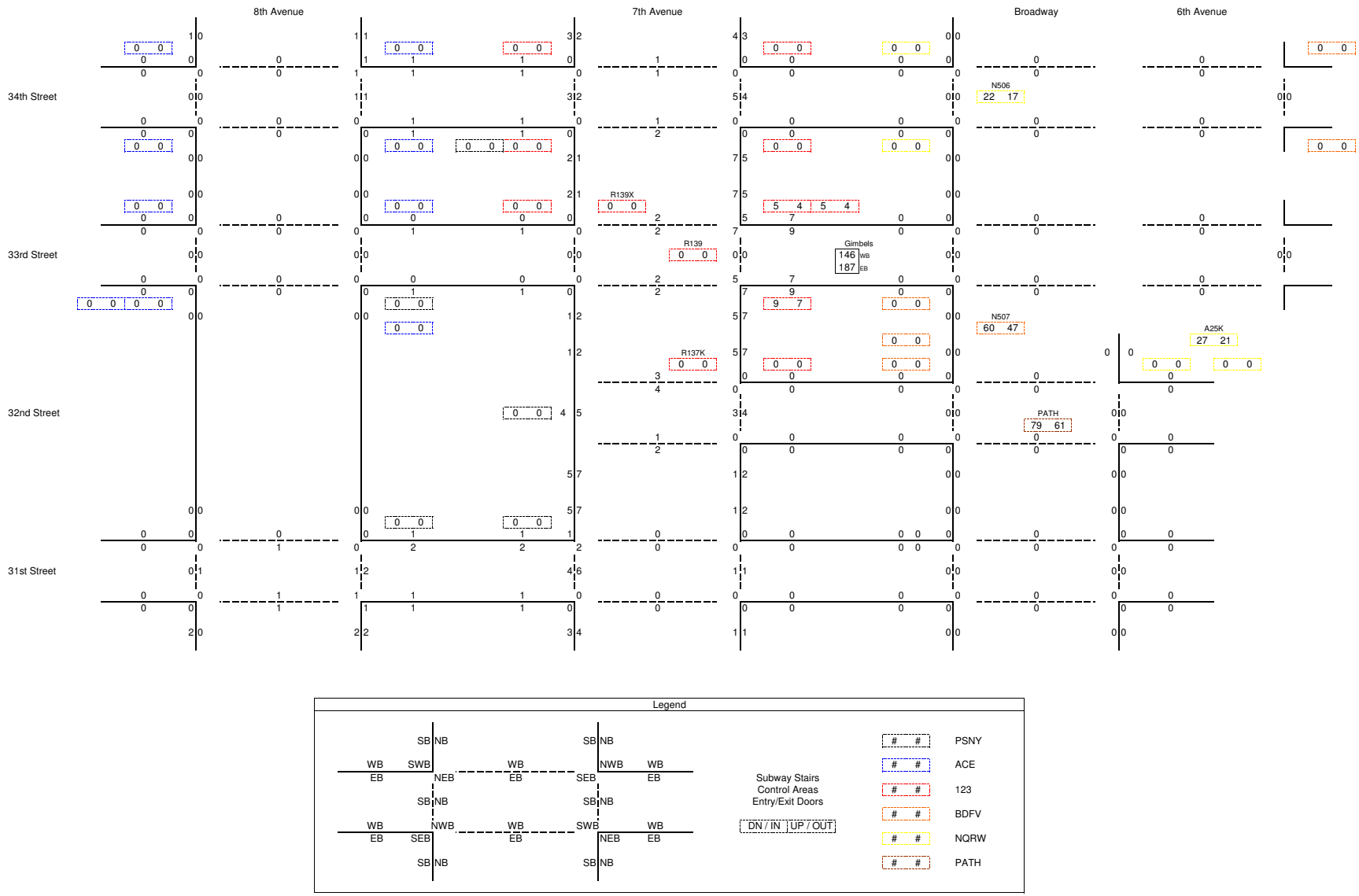

2014 Gimbels Passageway Capture Adjustment
MD Peak 15 Minutes
32N Total

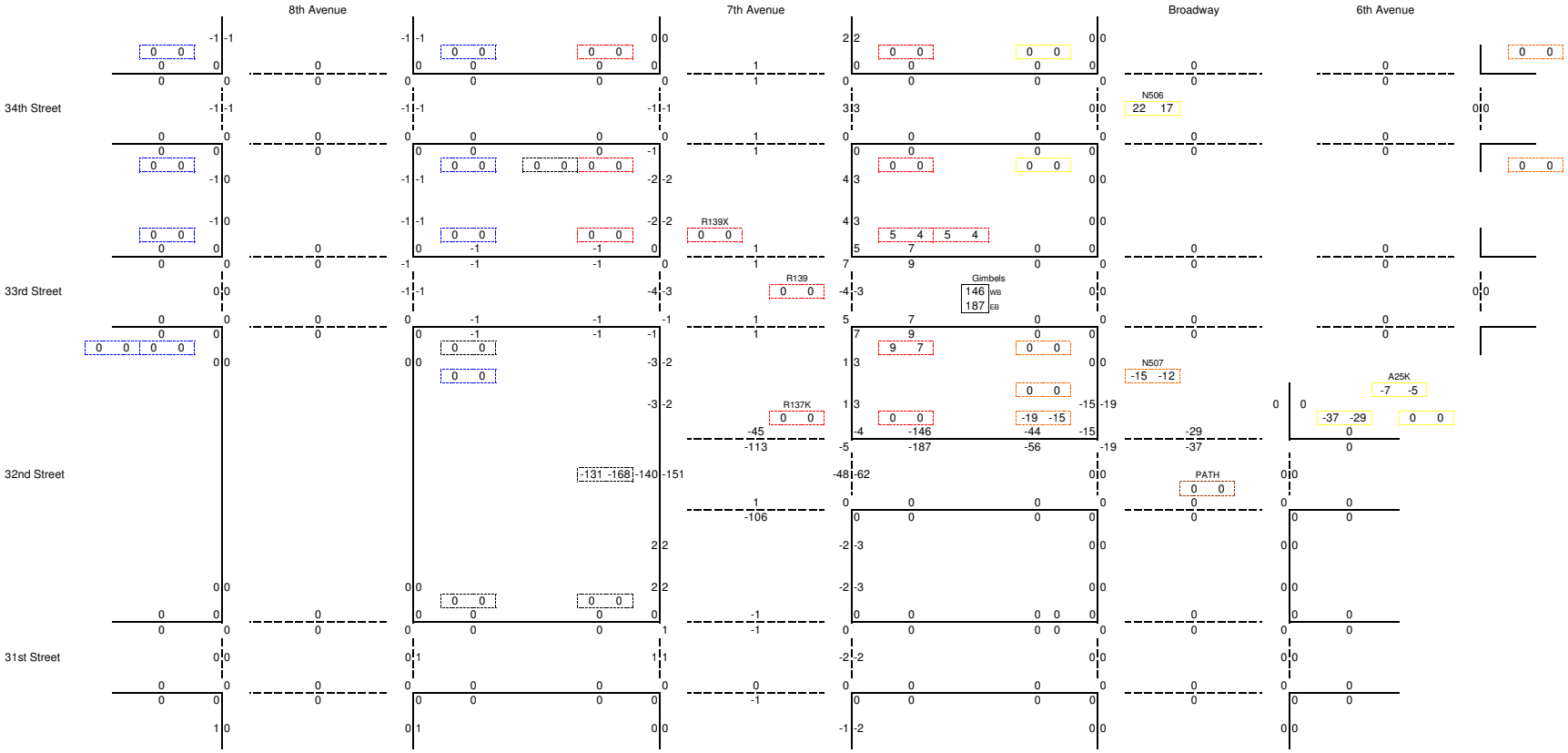

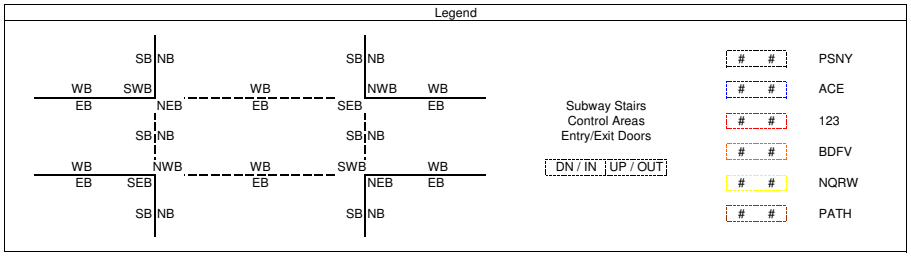

2014 Gimbels Passageway Capture Adjustment
MD Peak 15 Minutes
32S -# Total

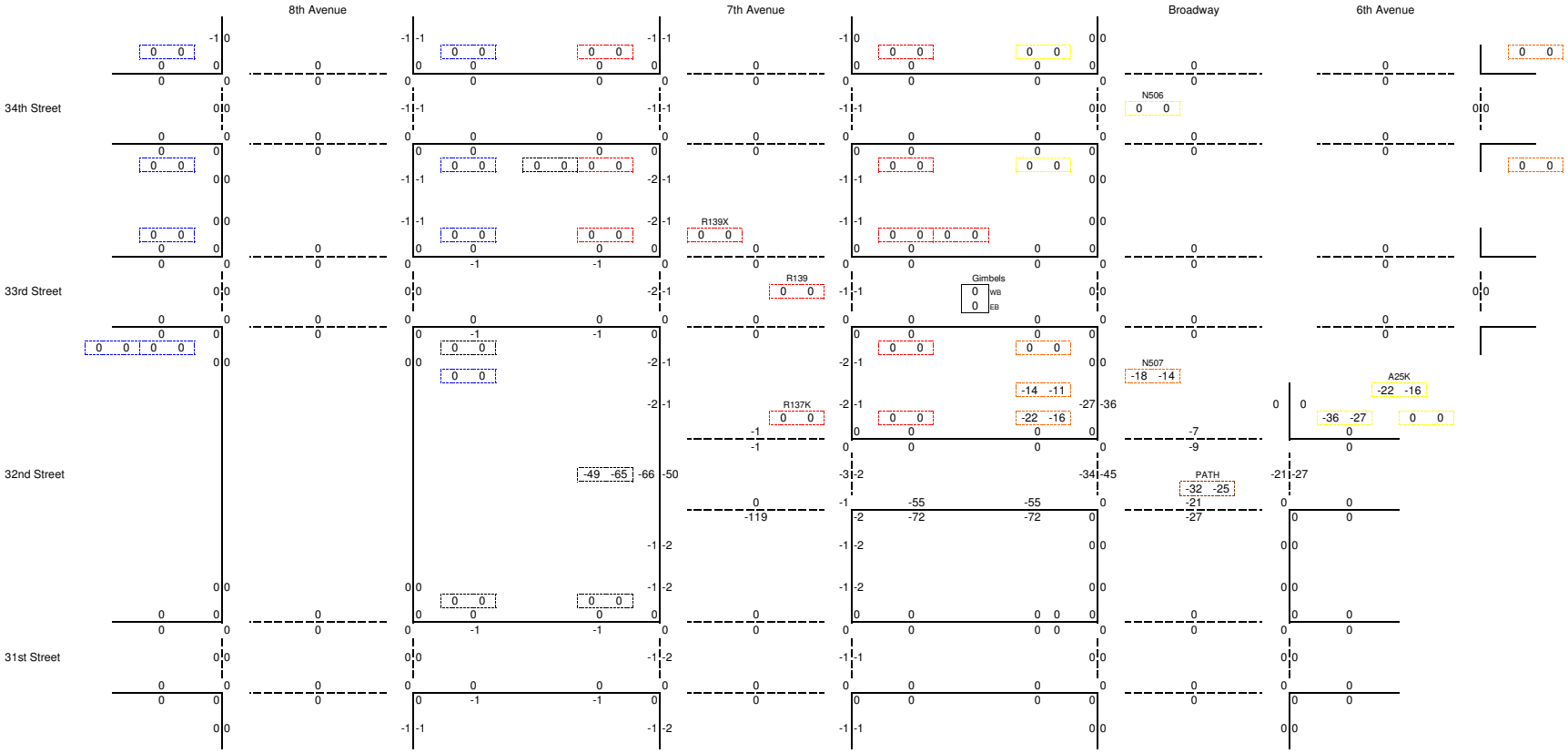

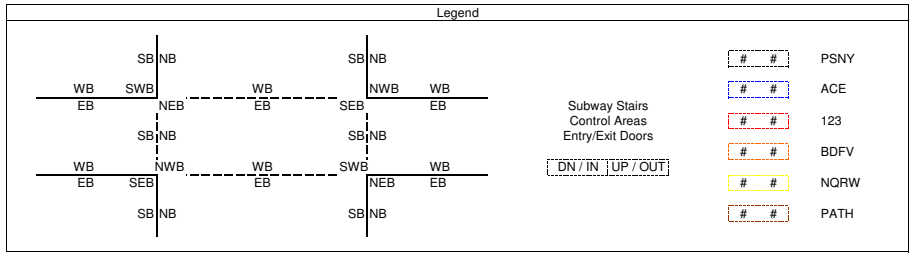

2014 Gimbels Passageway Capture Adjustment
MD Peak 15 Minutes
32S +# Total

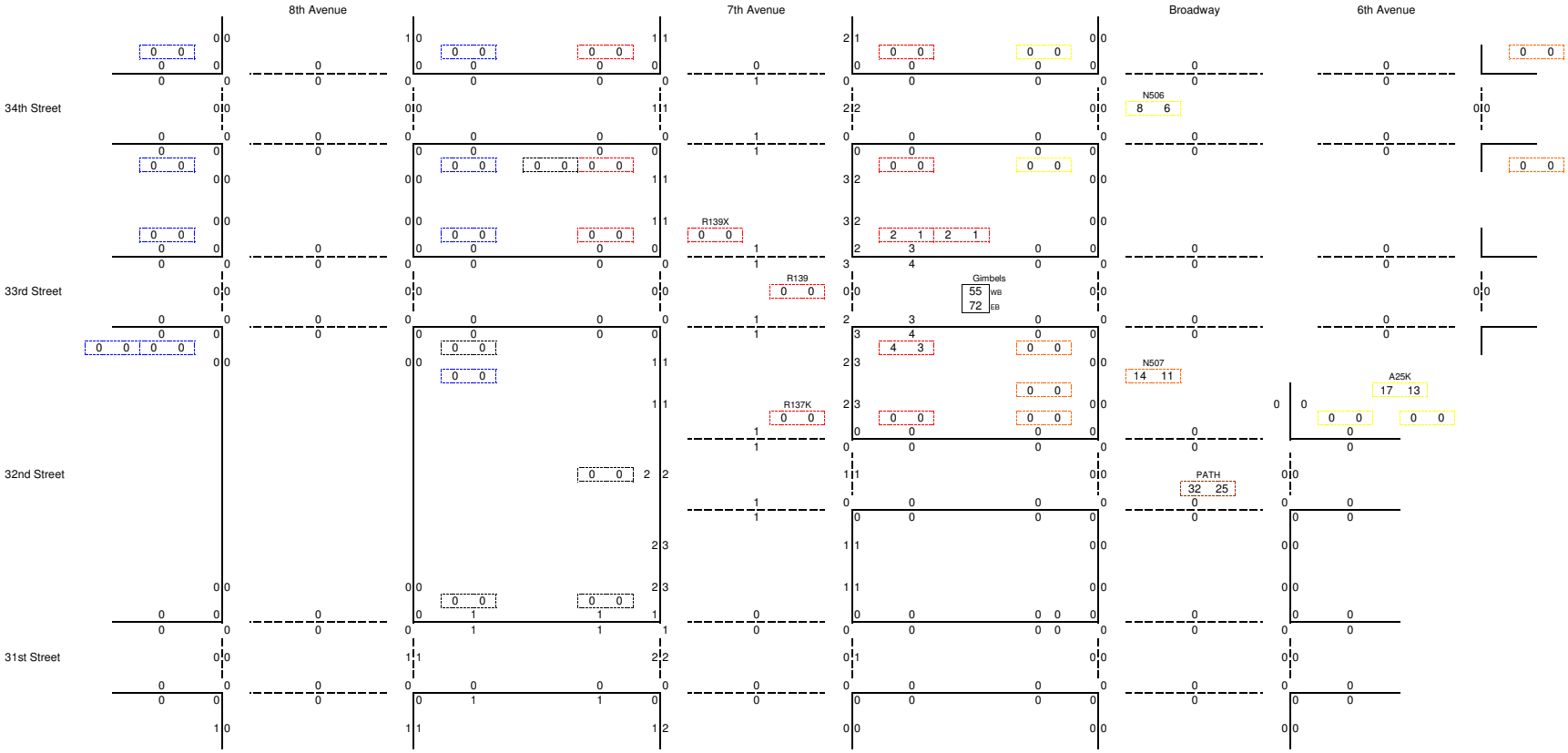

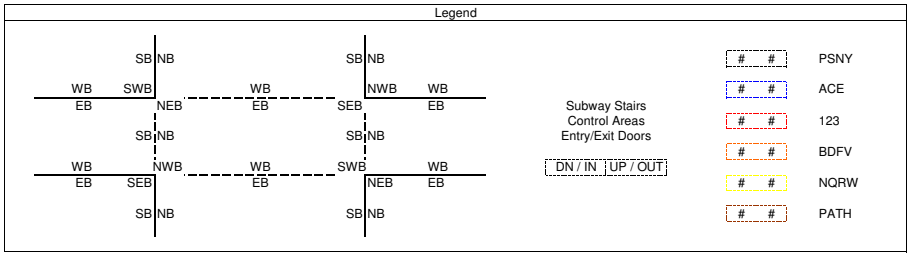

2014 Gimbels Passageway Capture Adjustment
MD Peak 15 Minutes
32S Total

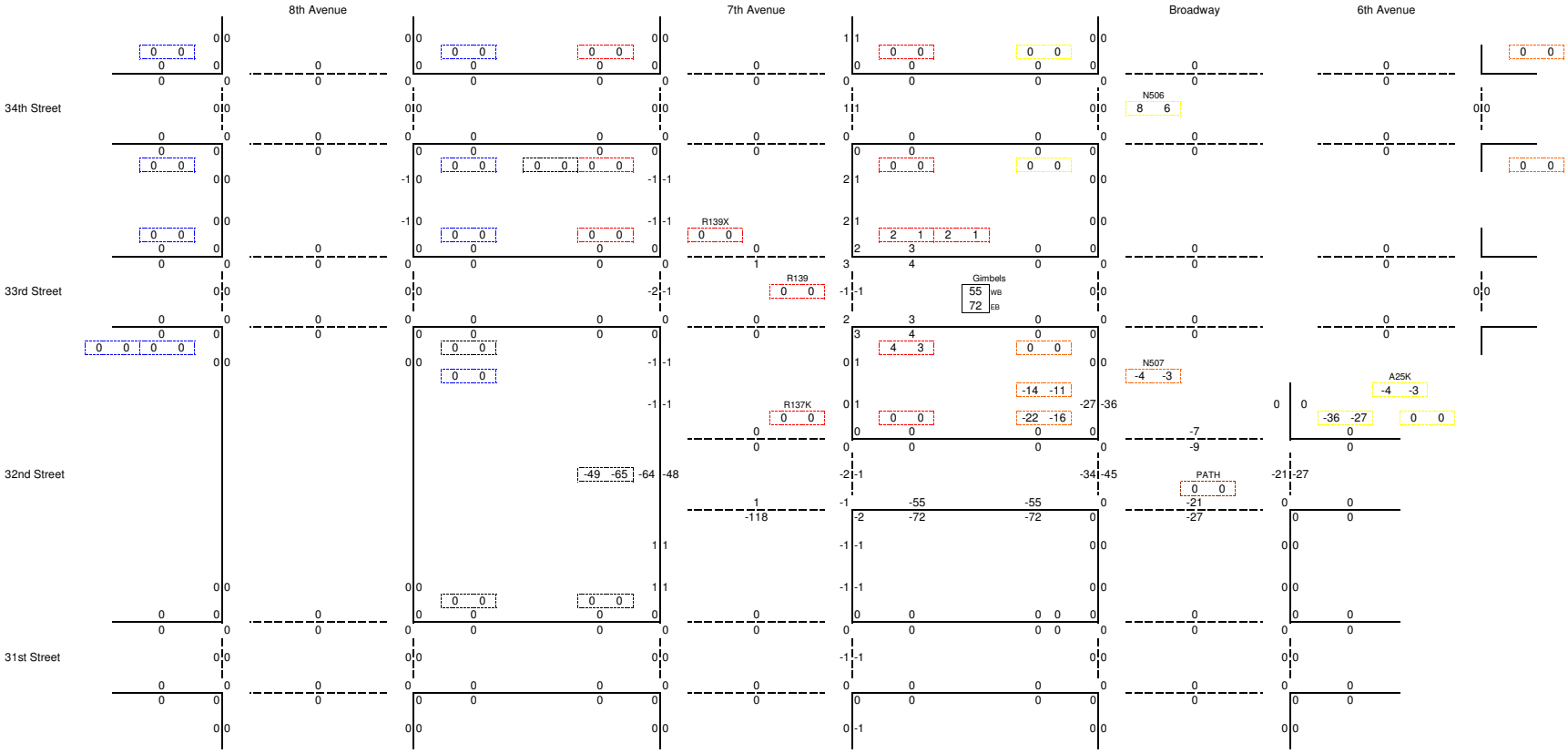

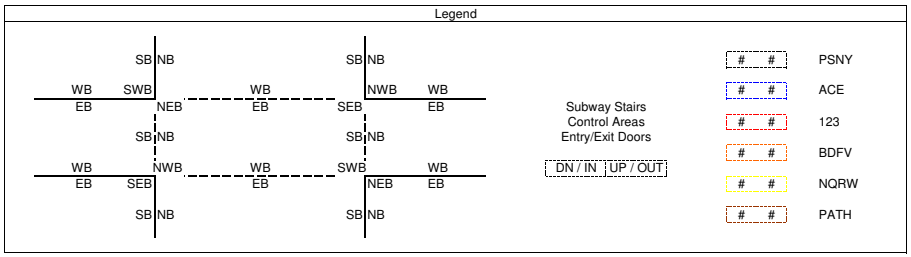

2014 Gimbels Passageway Capture Adjustment
MD Peak 15 Minutes
Total Adjustment

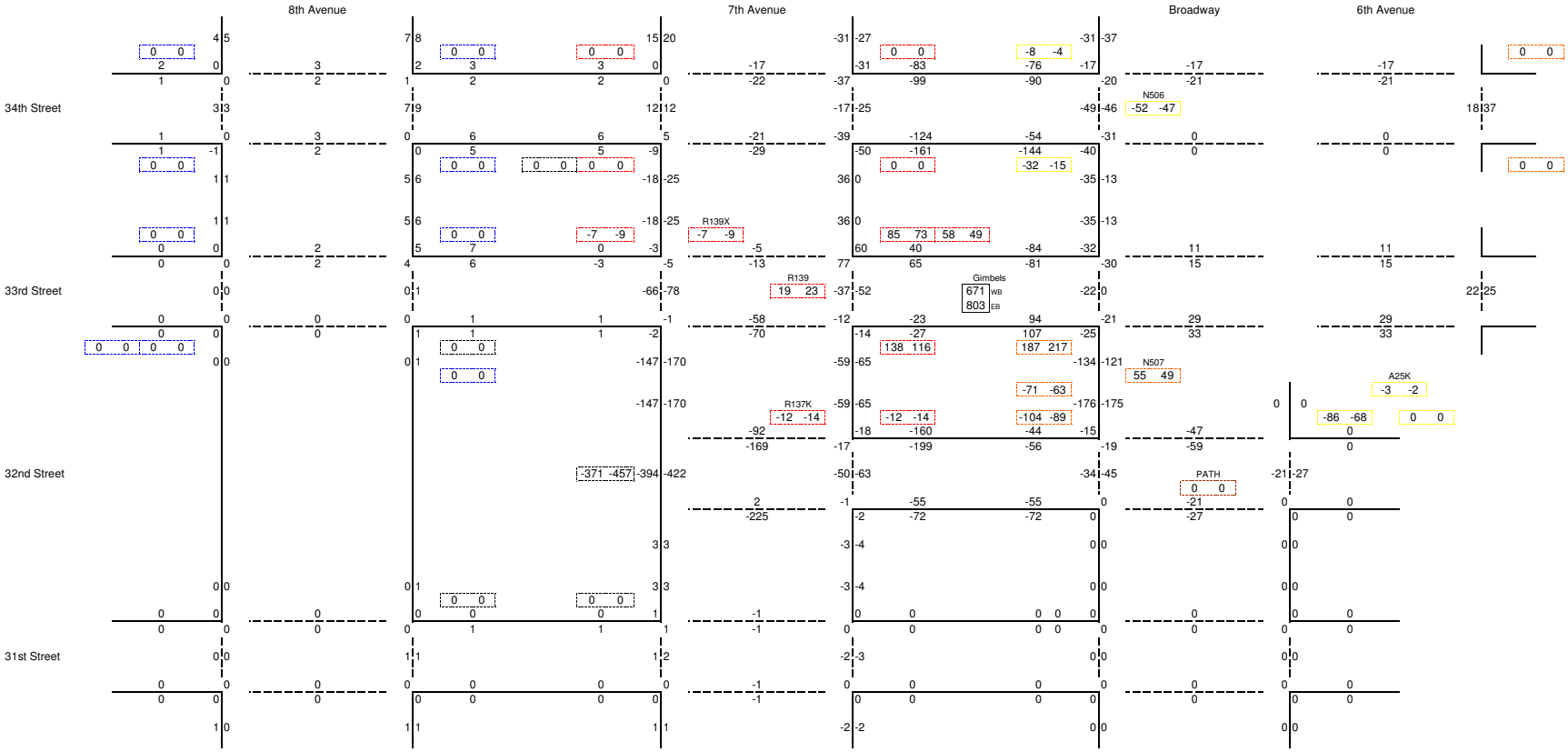

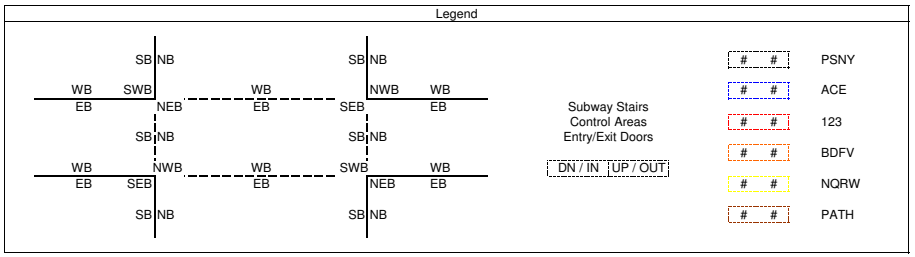

2014 Gimbels Passageway Capture Adjustment
PM Peak 15 Minutes
35-37 -# Total

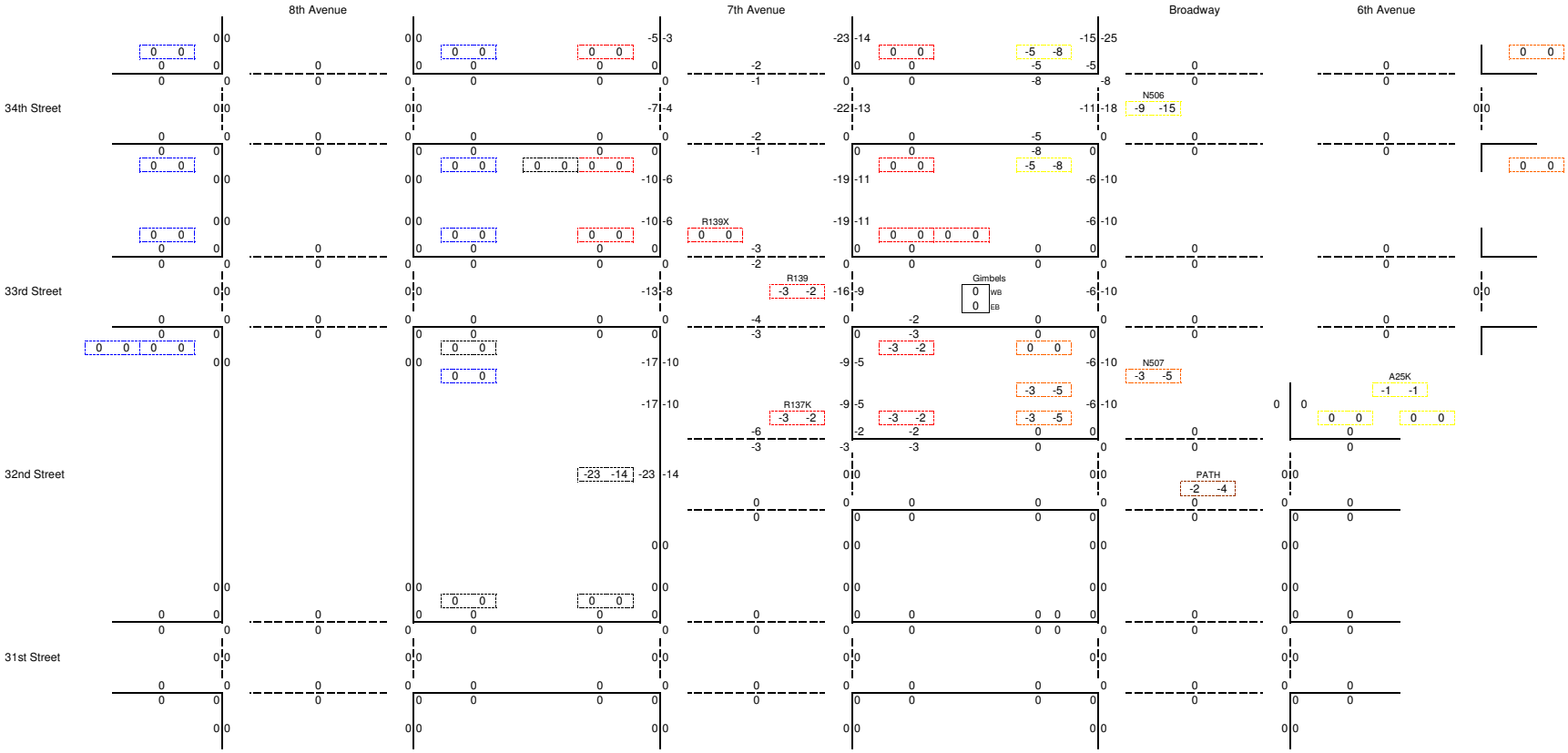

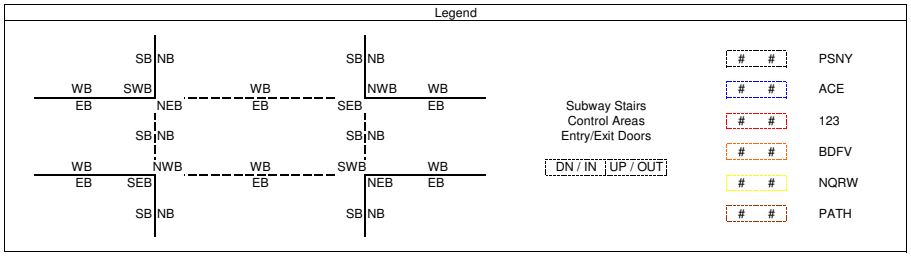

2014 Gimbels Passageway Capture Adjustment
PM Peak 15 Minutes
35-37 +# Total

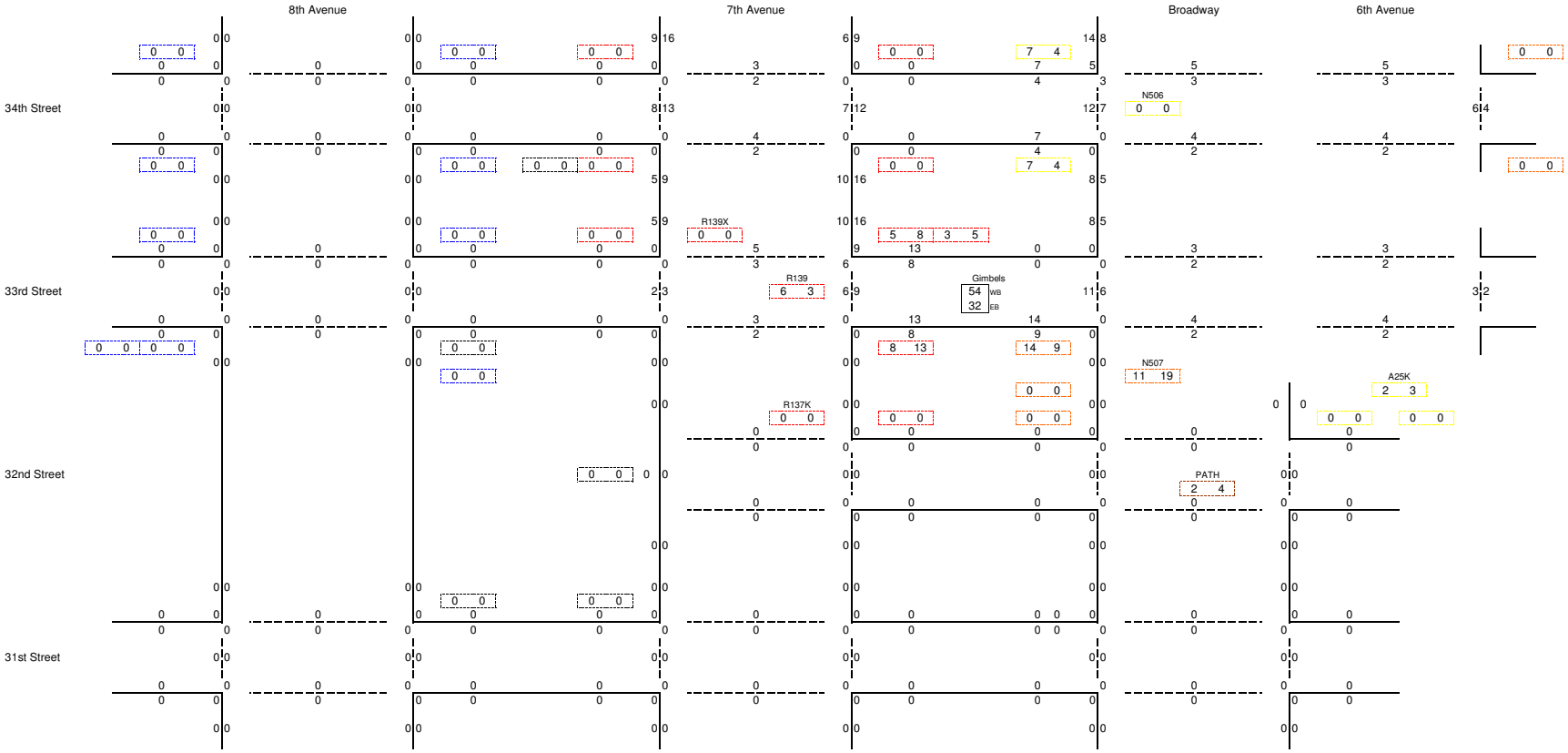

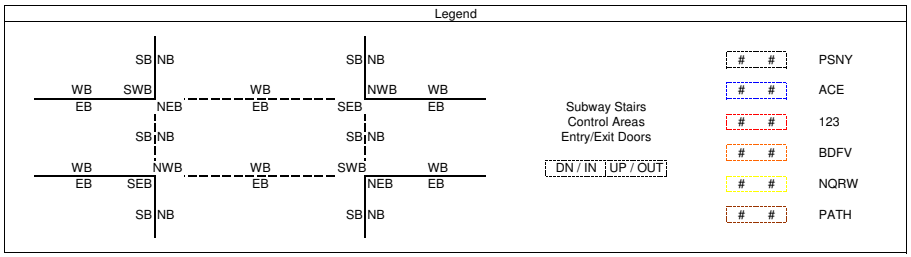

2014 Gimbels Passageway Capture Adjustment
PM Peak 15 Minutes
35-37 Total

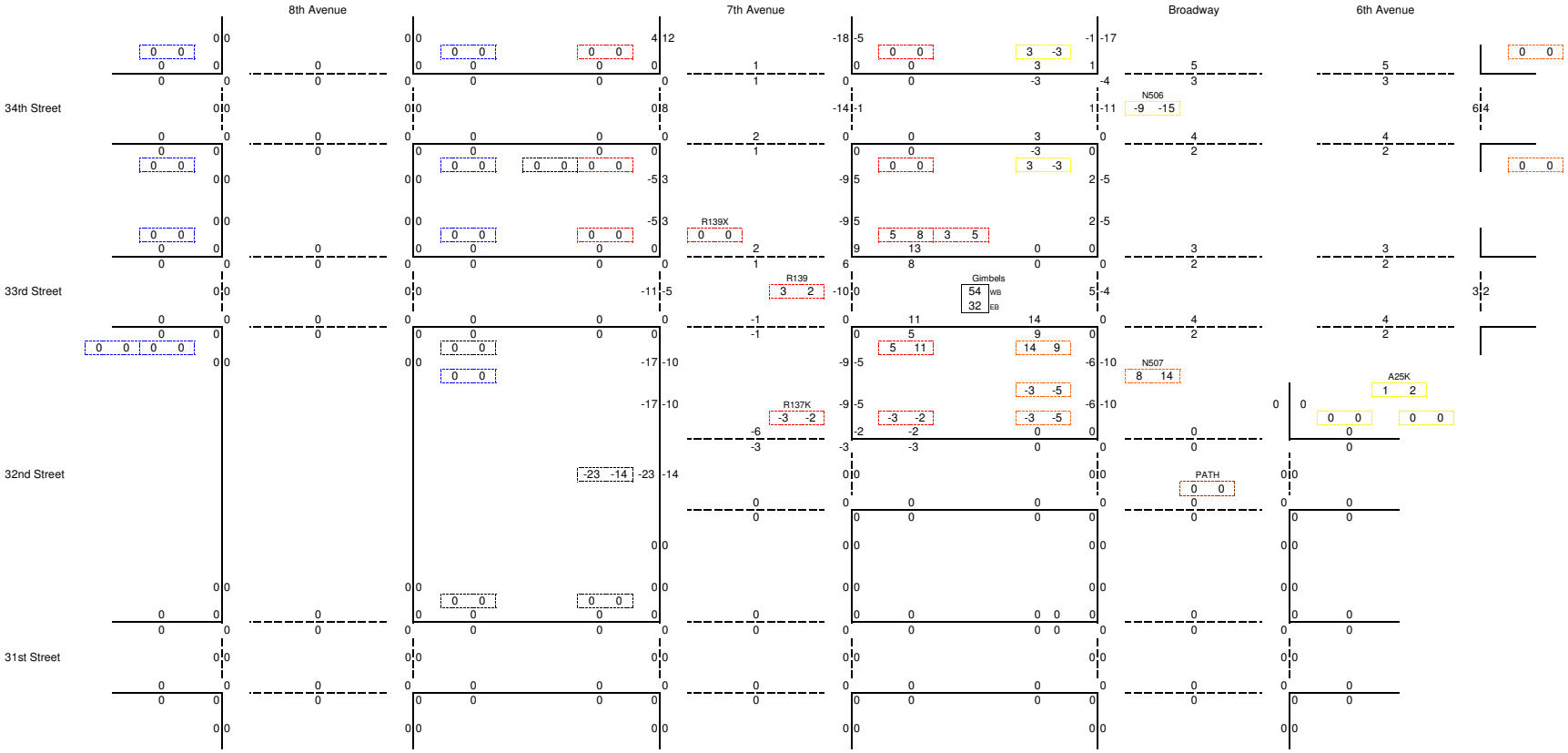

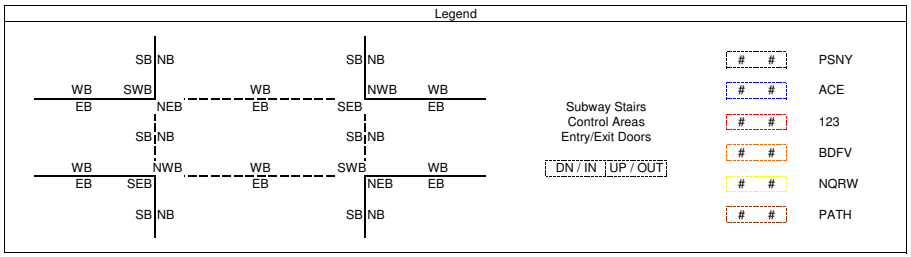

2014 Gimbels Passageway Capture Adjustment
PM Peak 15 Minutes
34N -# Total

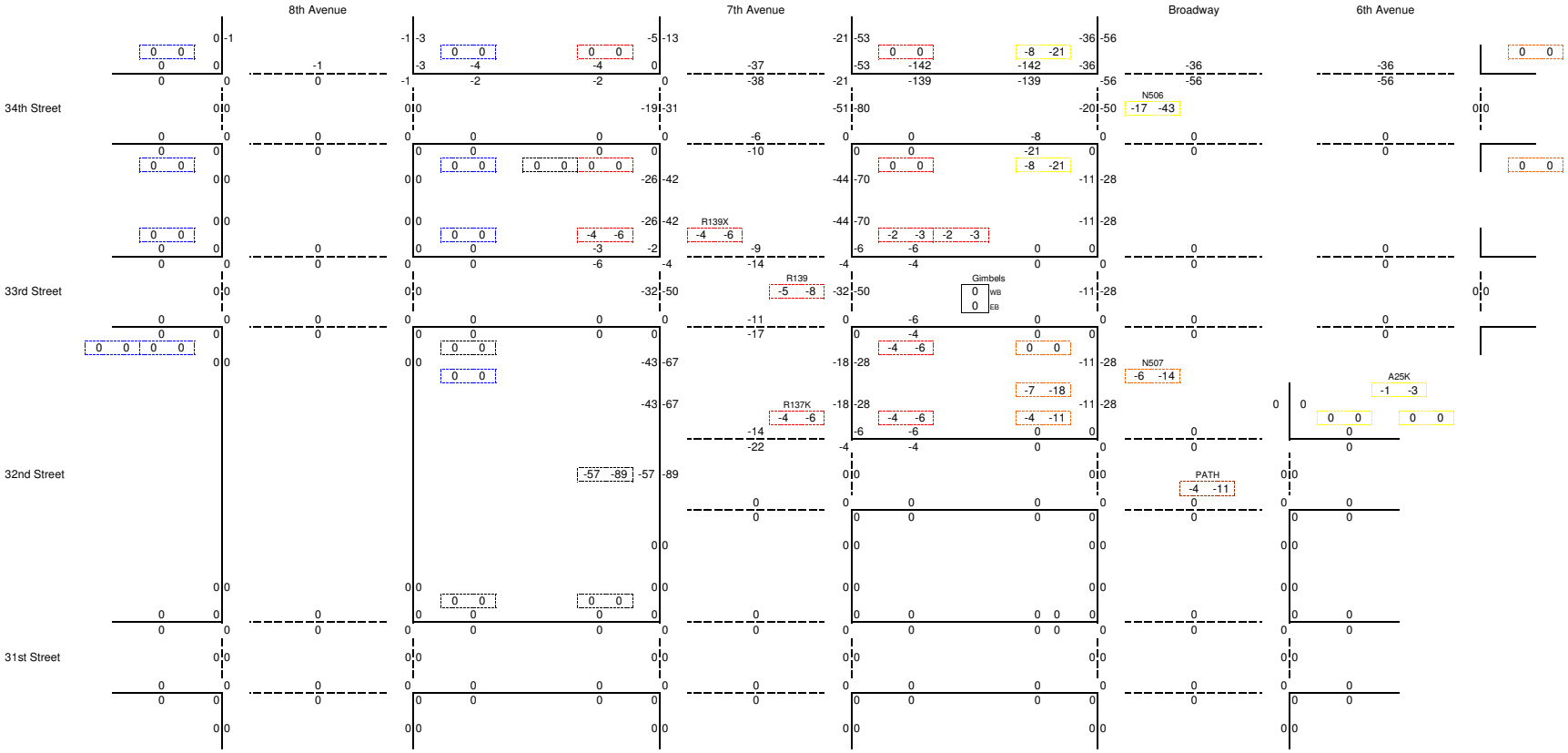

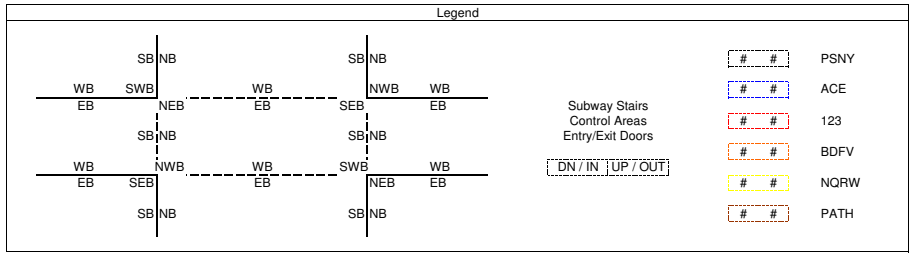

2014 Gimbels Passageway Capture Adjustment
PM Peak 15 Minutes
34N +# Total

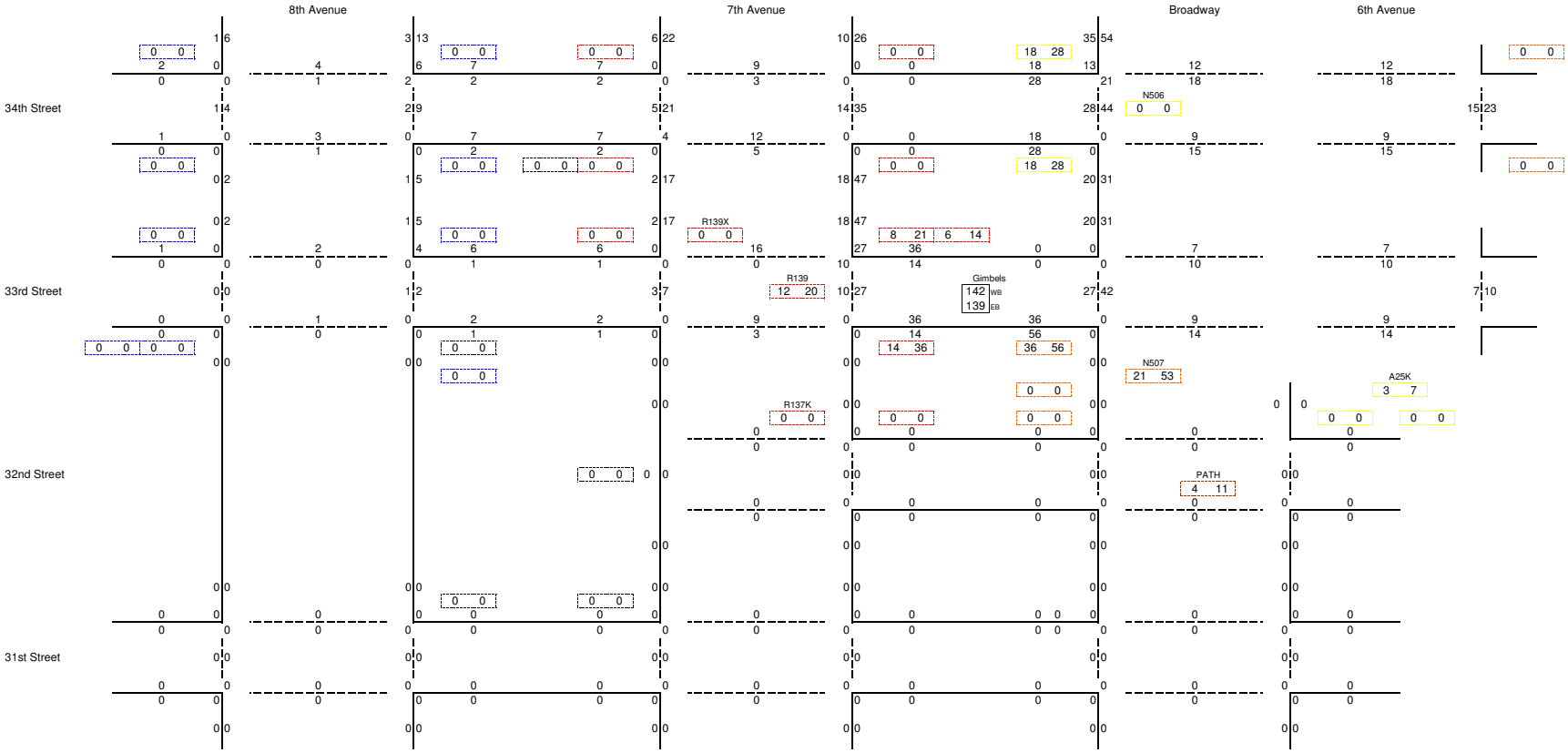

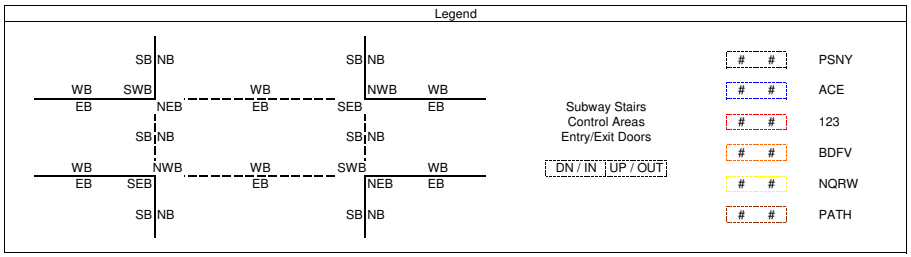

2014 Gimbels Passageway Capture Adjustment
PM Peak 15 Minutes
34N Total

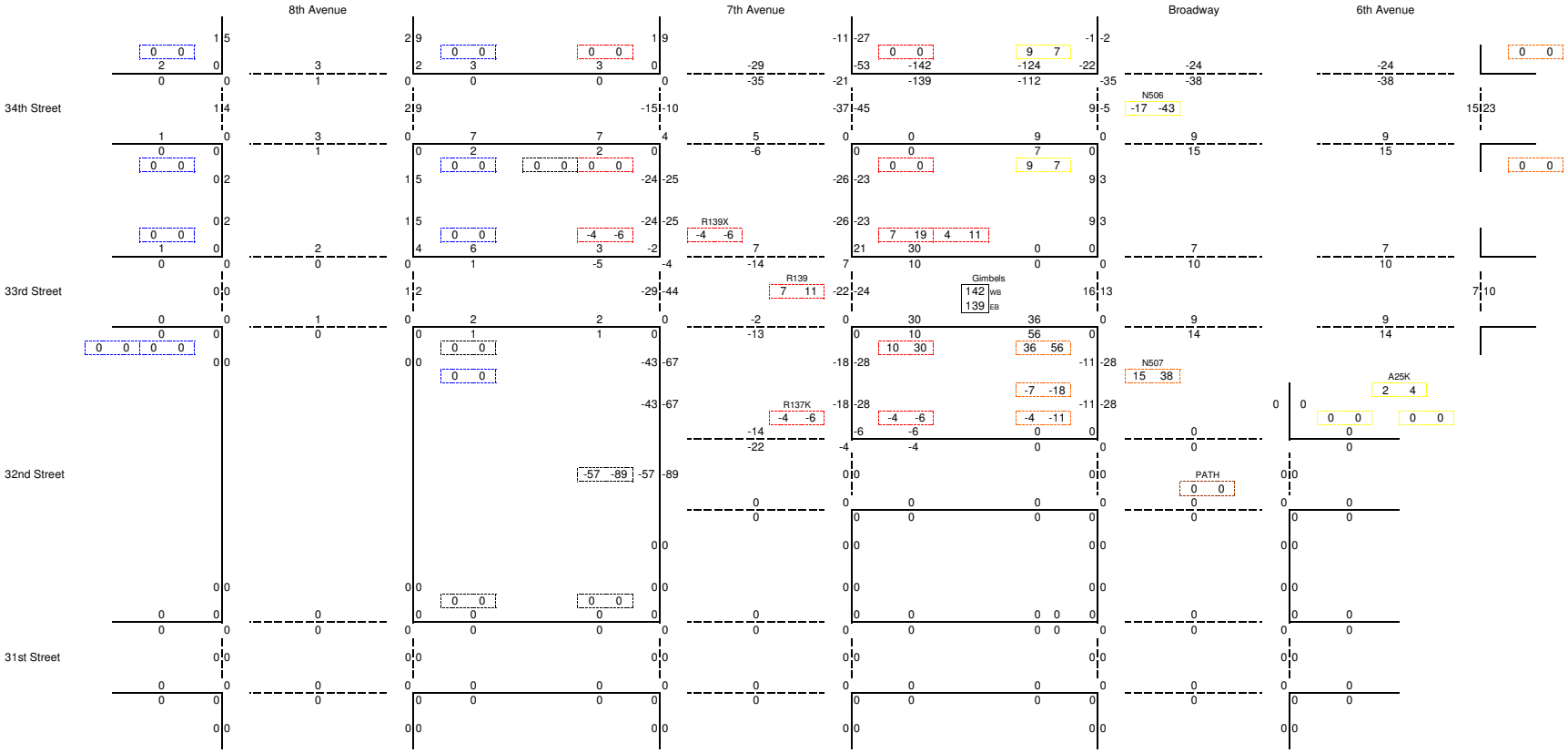

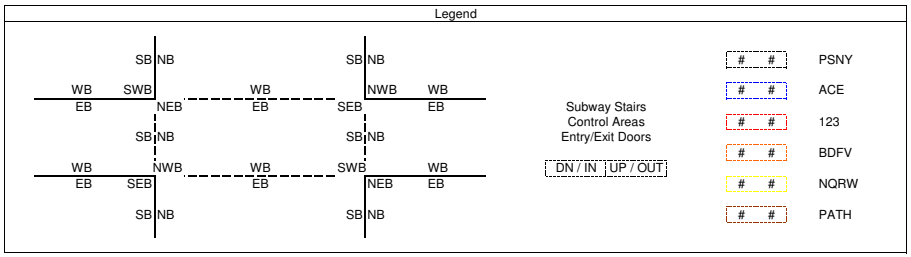

2014 Gimbels Passageway Capture Adjustment
PM Peak 15 Minutes
34S -# Total

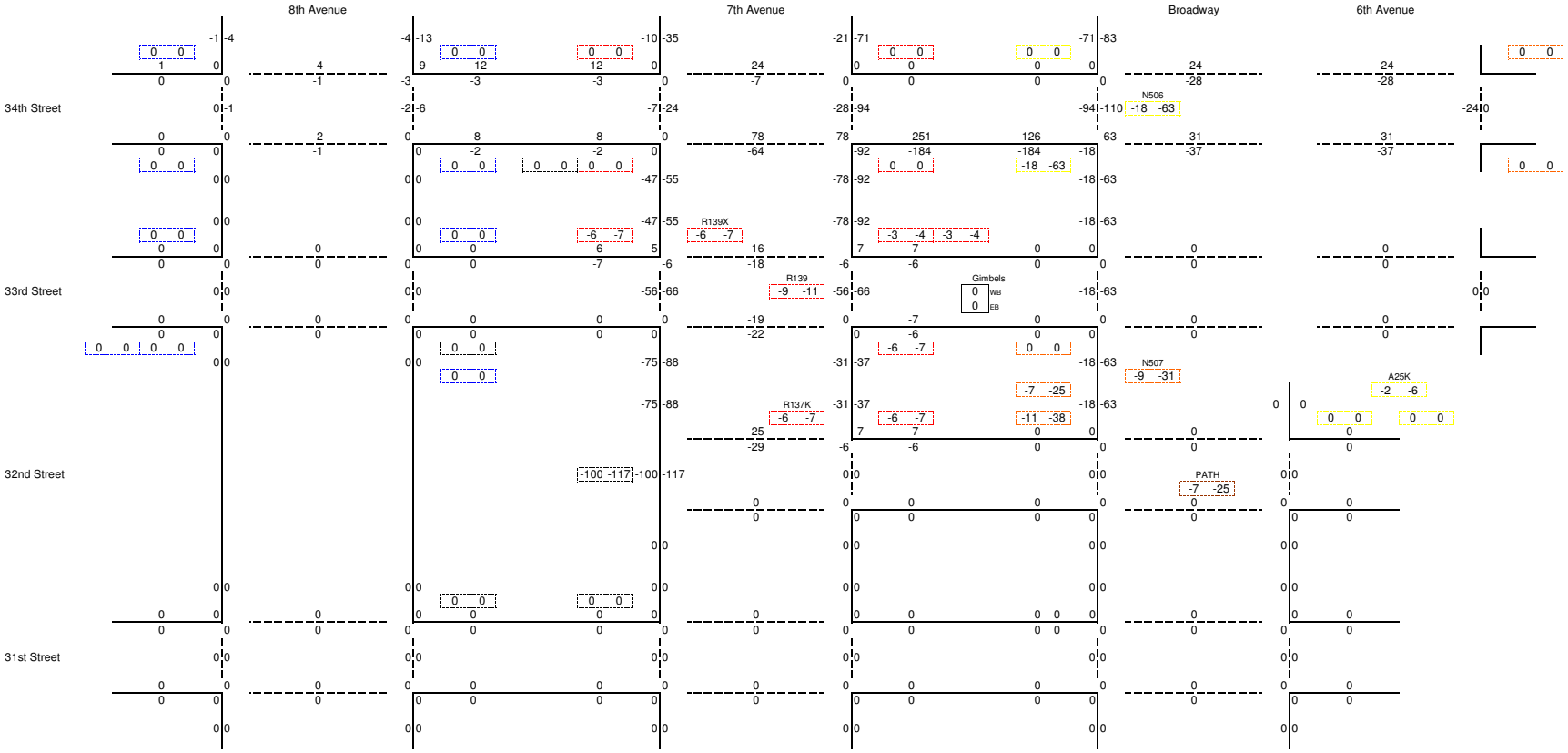

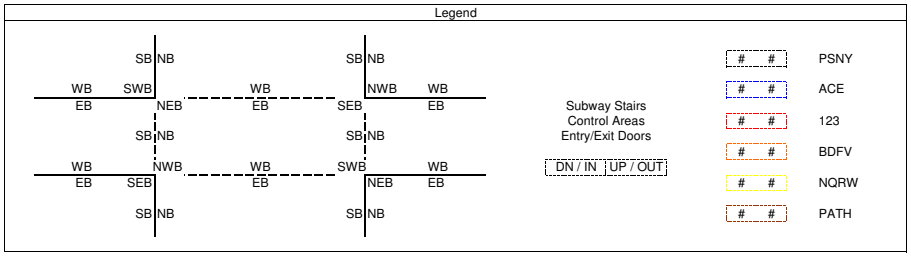

2014 Gimbels Passageway Capture Adjustment
PM Peak 15 Minutes
34S +# Total

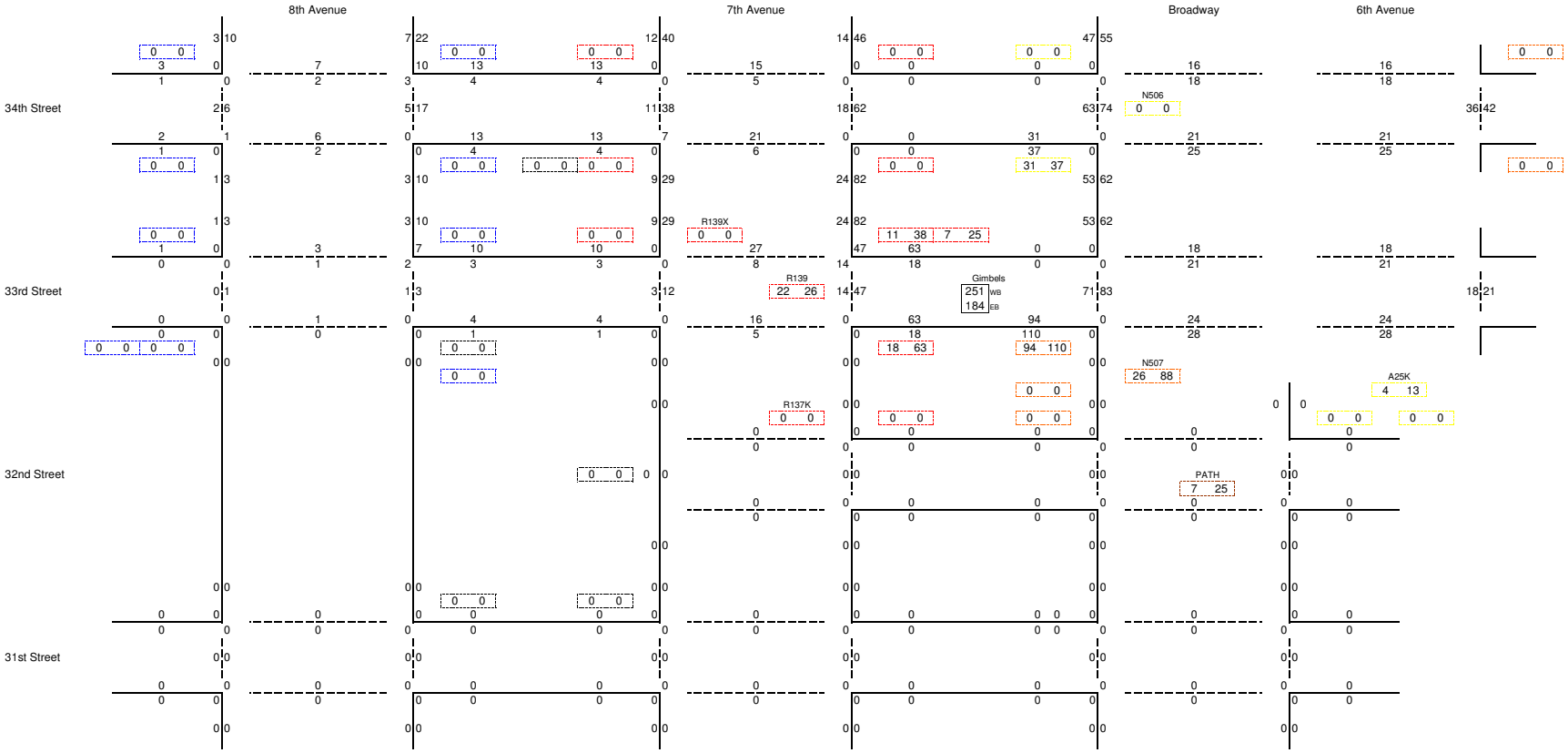

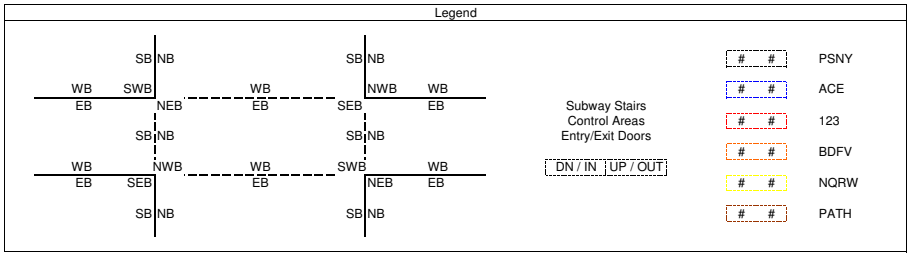

2014 Gimbels Passageway Capture Adjustment
PM Peak 15 Minutes
34S Total

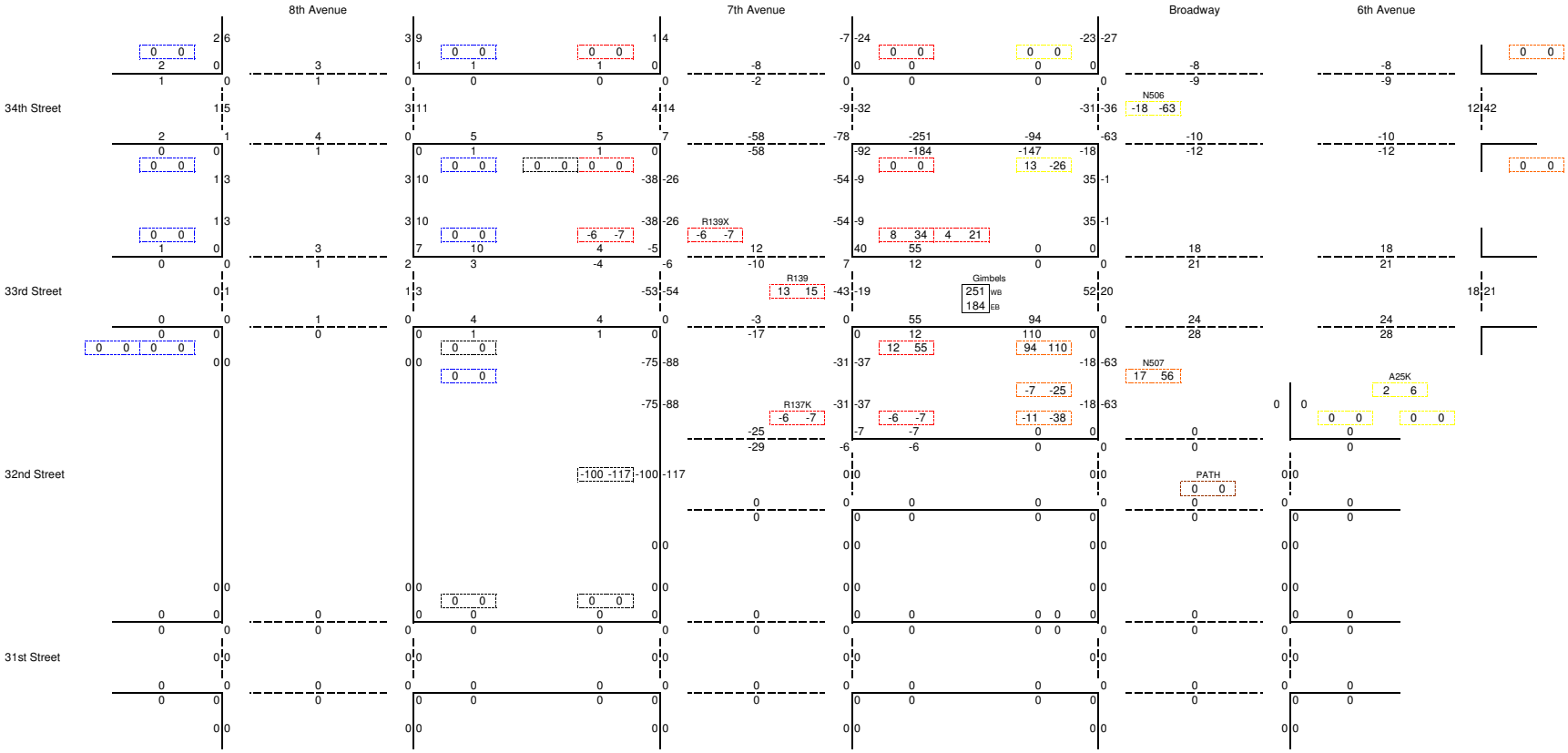

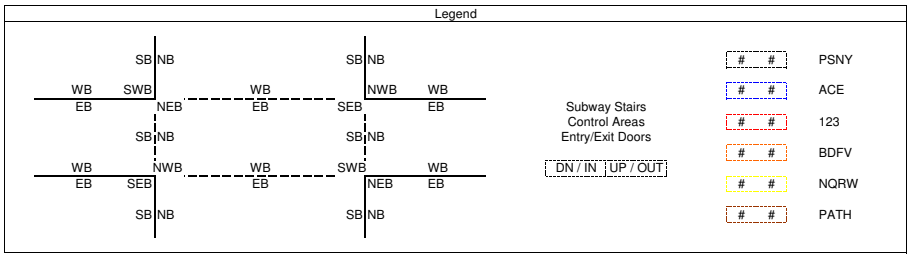

2014 Gimbels Passageway Capture Adjustment
PM Peak 15 Minutes
33N -# Total

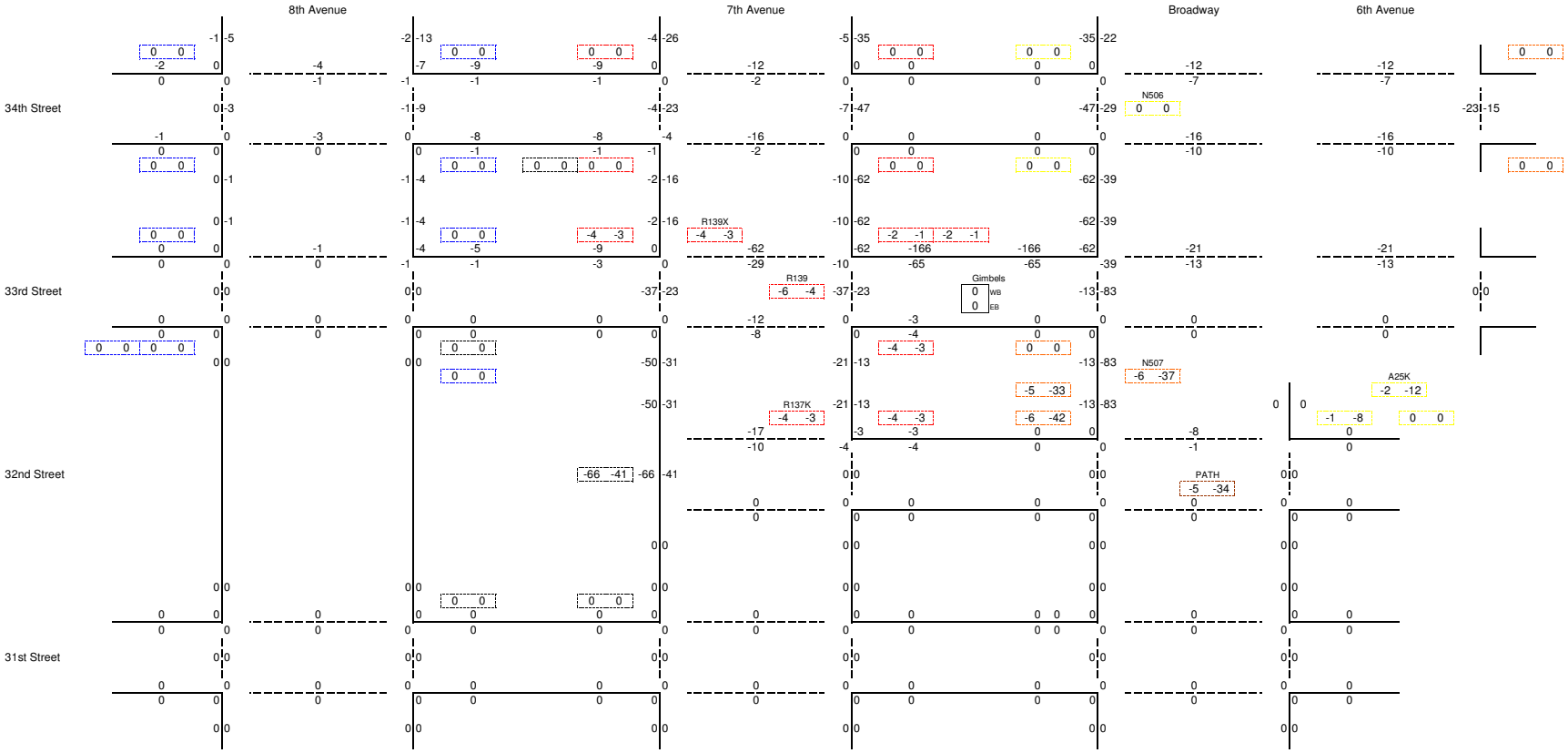

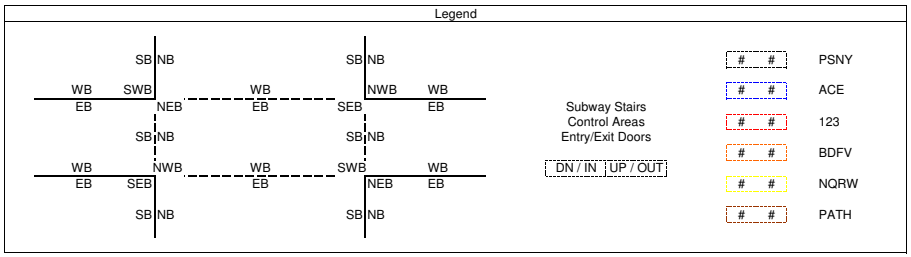

2014 Gimbels Passageway Capture Adjustment
PM Peak 15 Minutes
33N +# Total

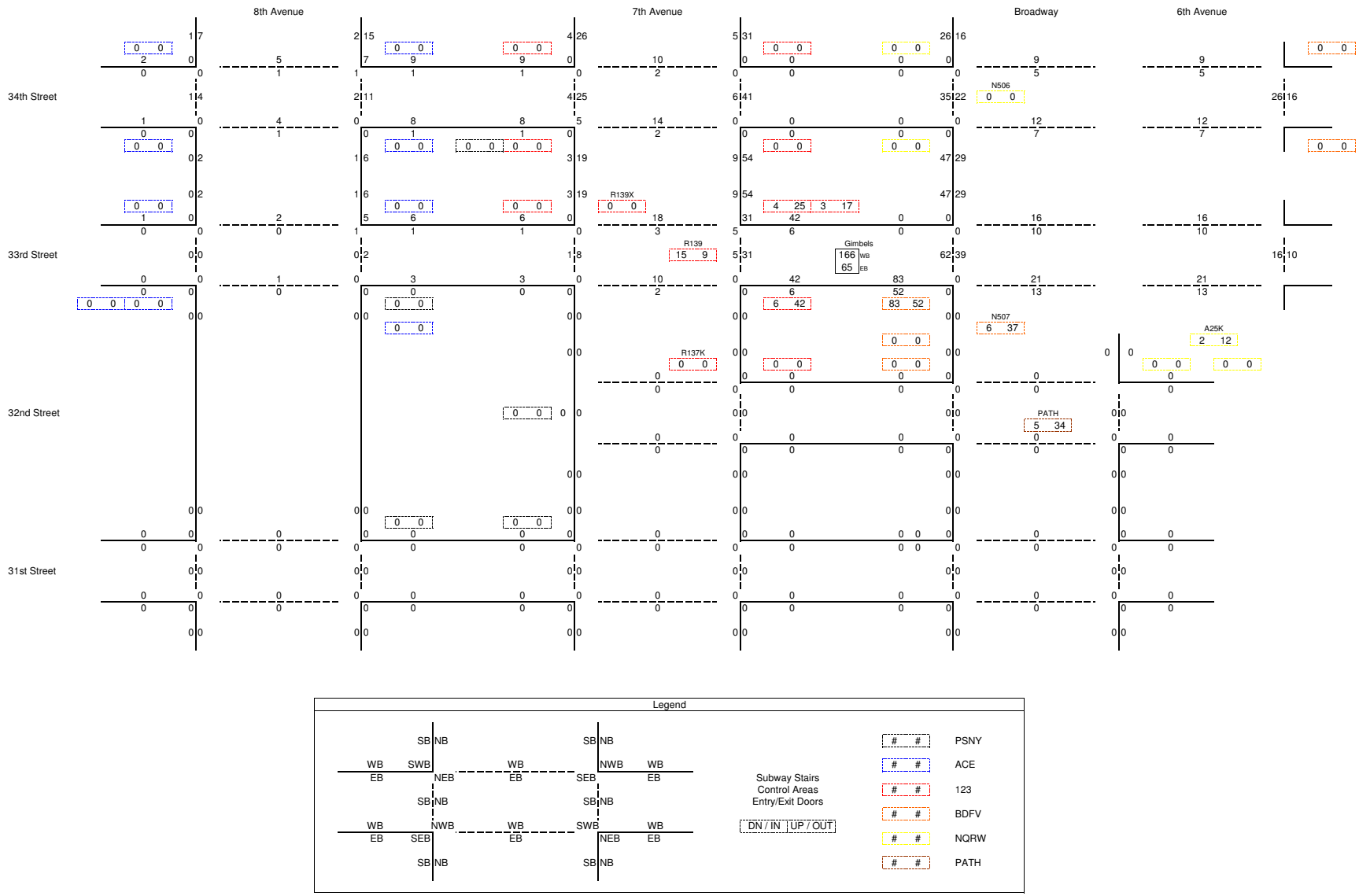

2014 Gimbels Passageway Capture Adjustment
PM Peak 15 Minutes
33N Total

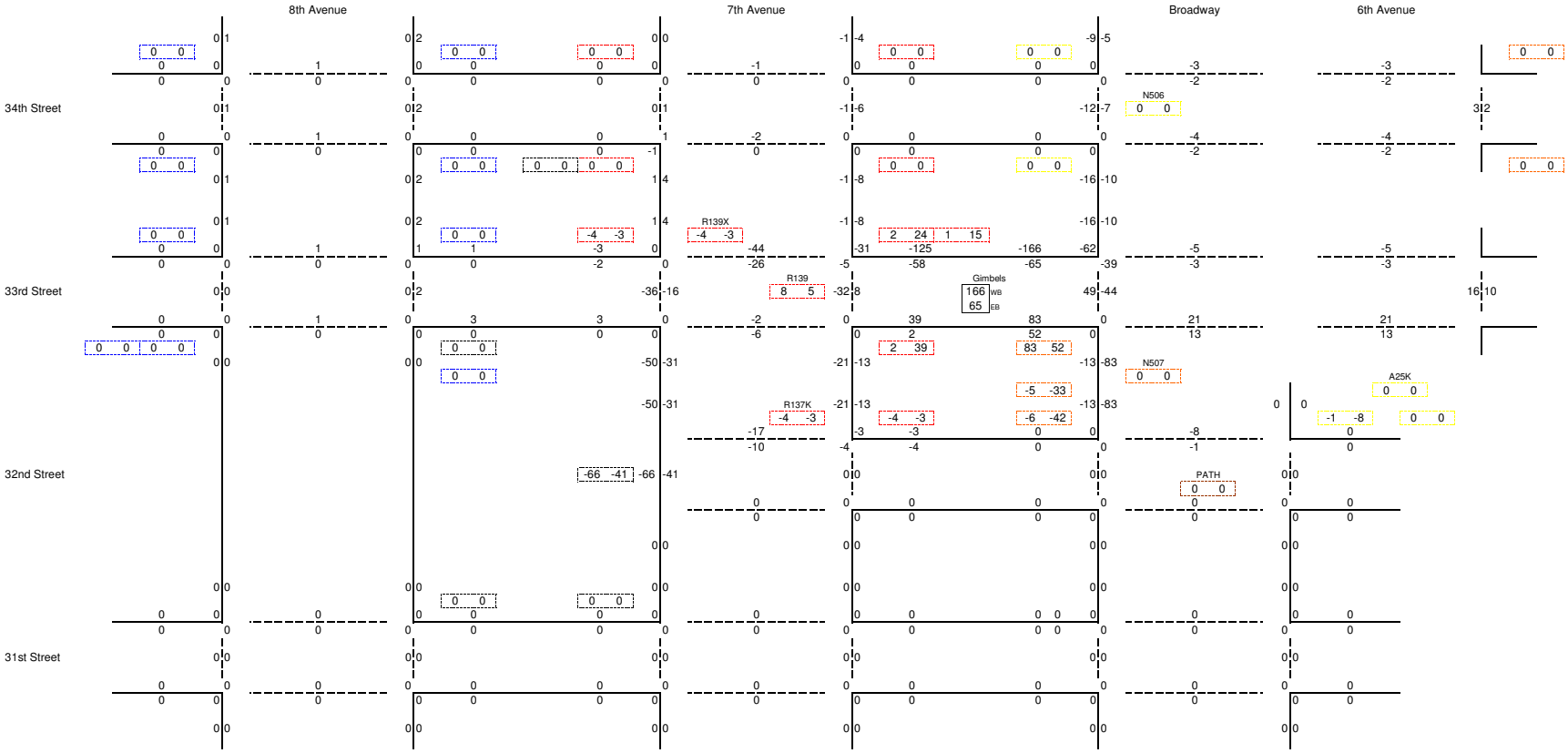

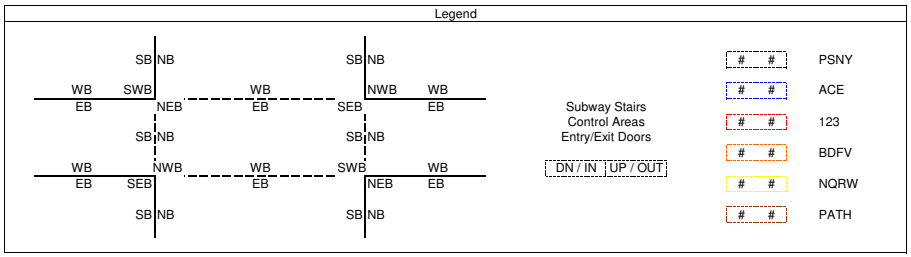

2014 Gimbels Passageway Capture Adjustment
PM Peak 15 Minutes
33S -# Total

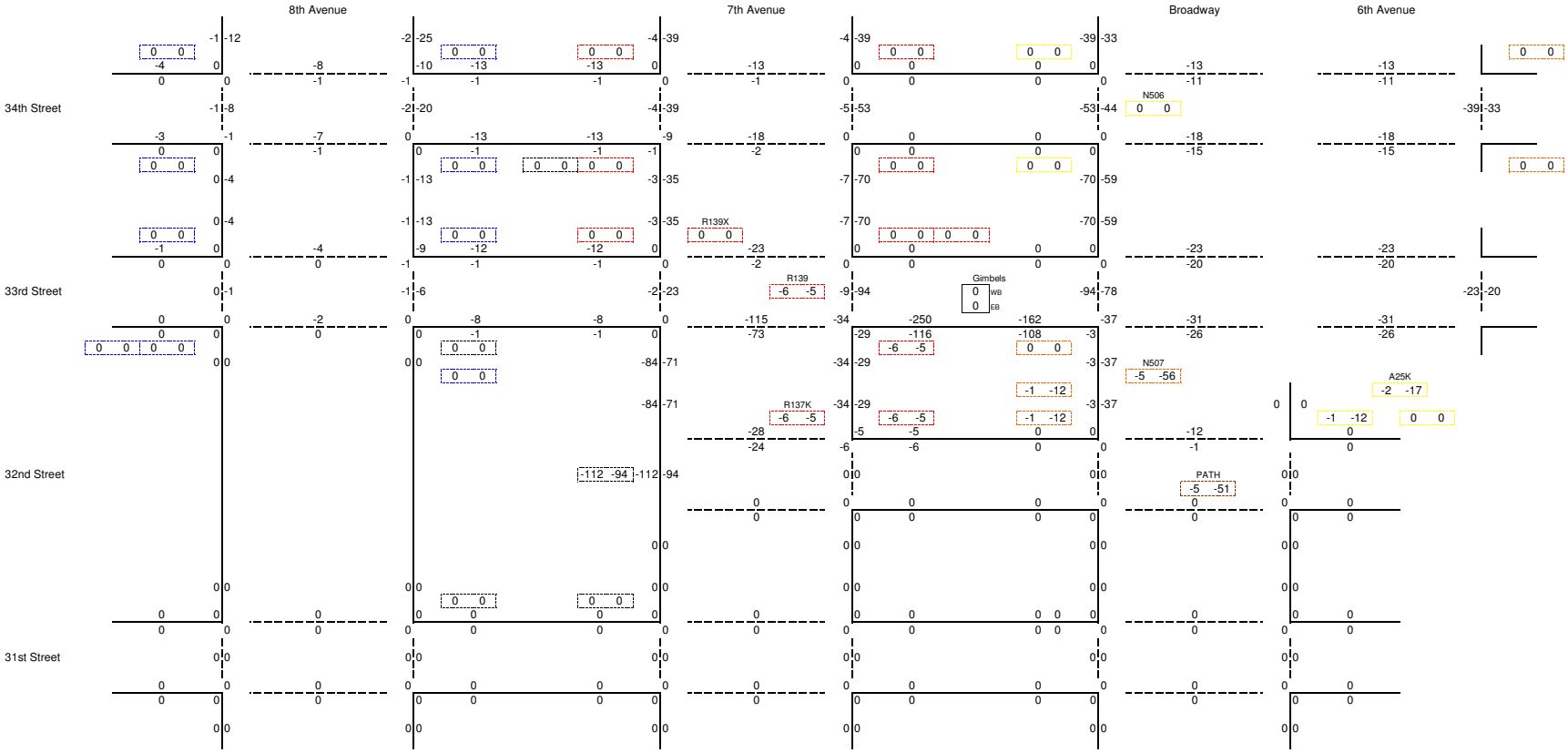

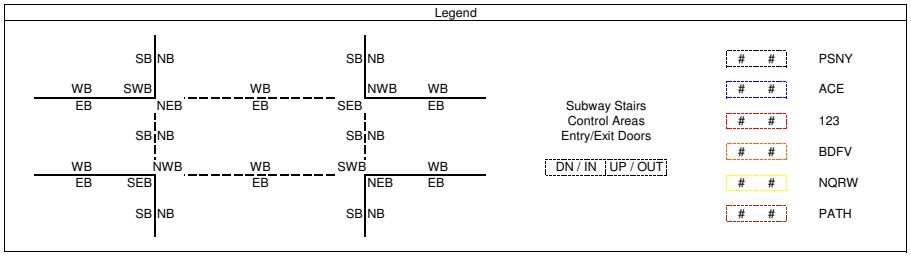

2014 Gimbels Passageway Capture Adjustment
PM Peak 15 Minutes
33S +# Total

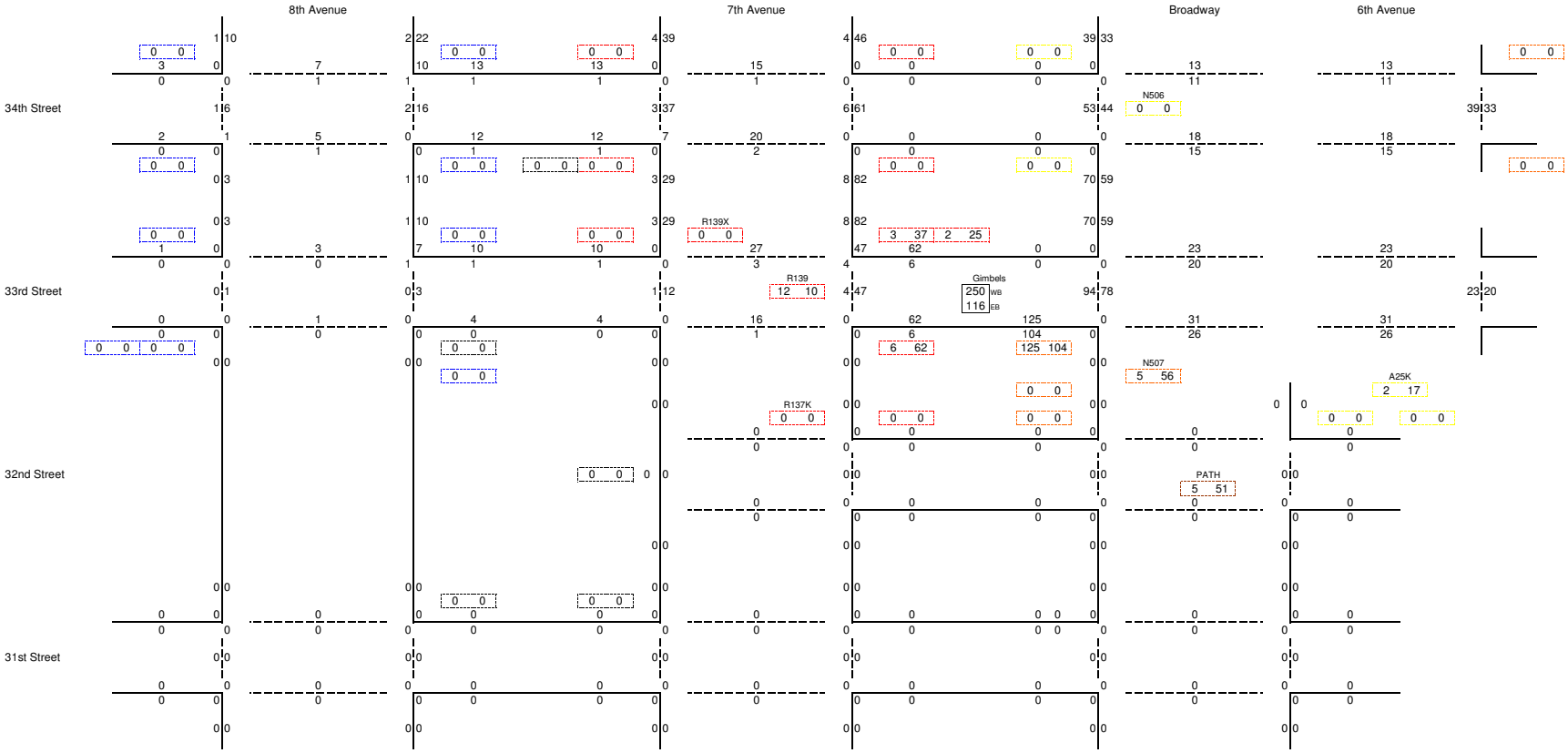

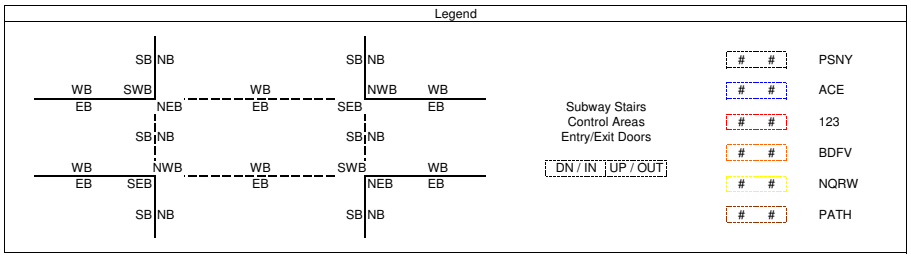

2014 Gimbels Passageway Capture Adjustment
PM Peak 15 Minutes
33S Total

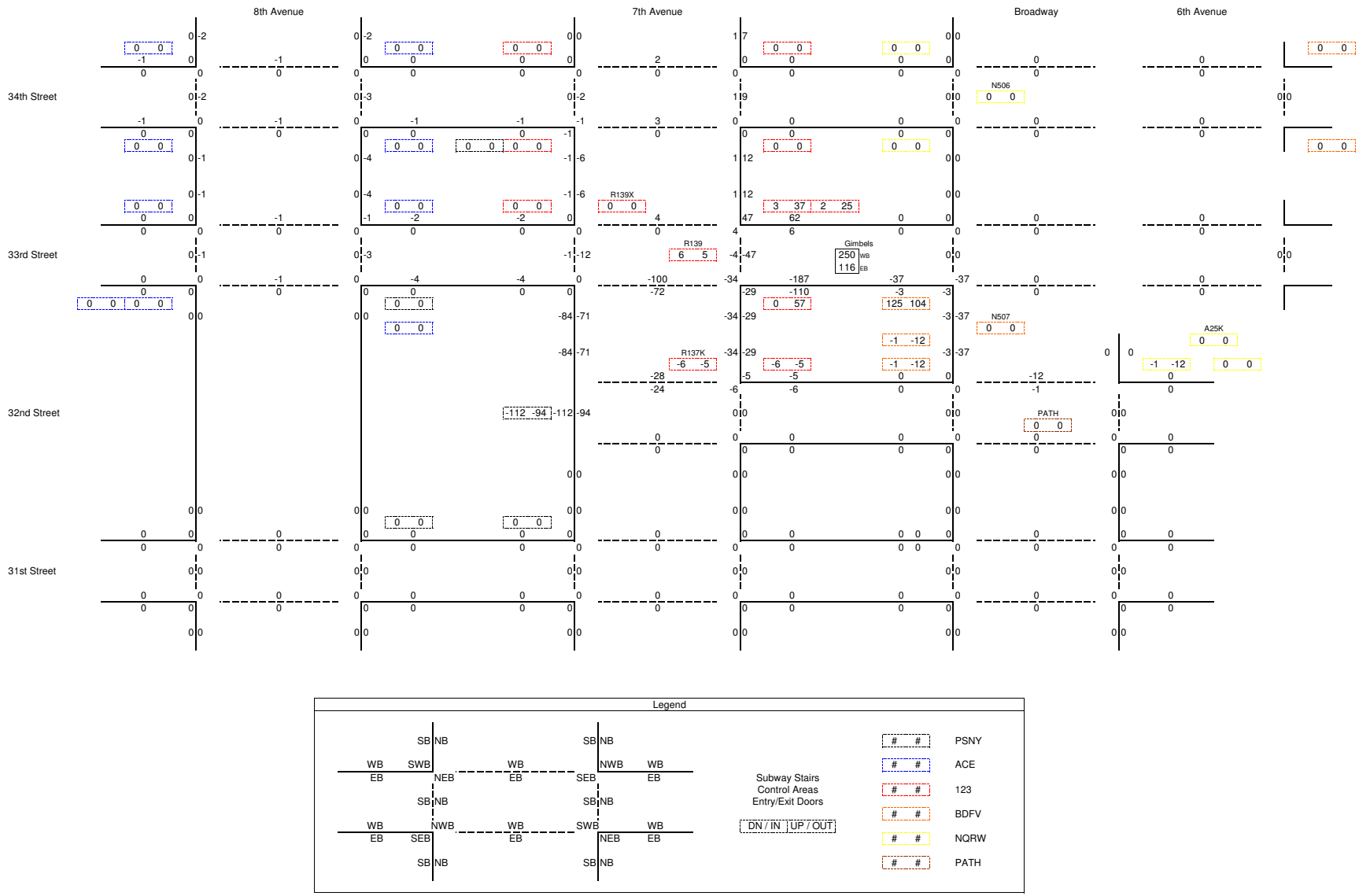

2014 Gimbels Passageway Capture Adjustment
PM Peak 15 Minutes
32N -# Total

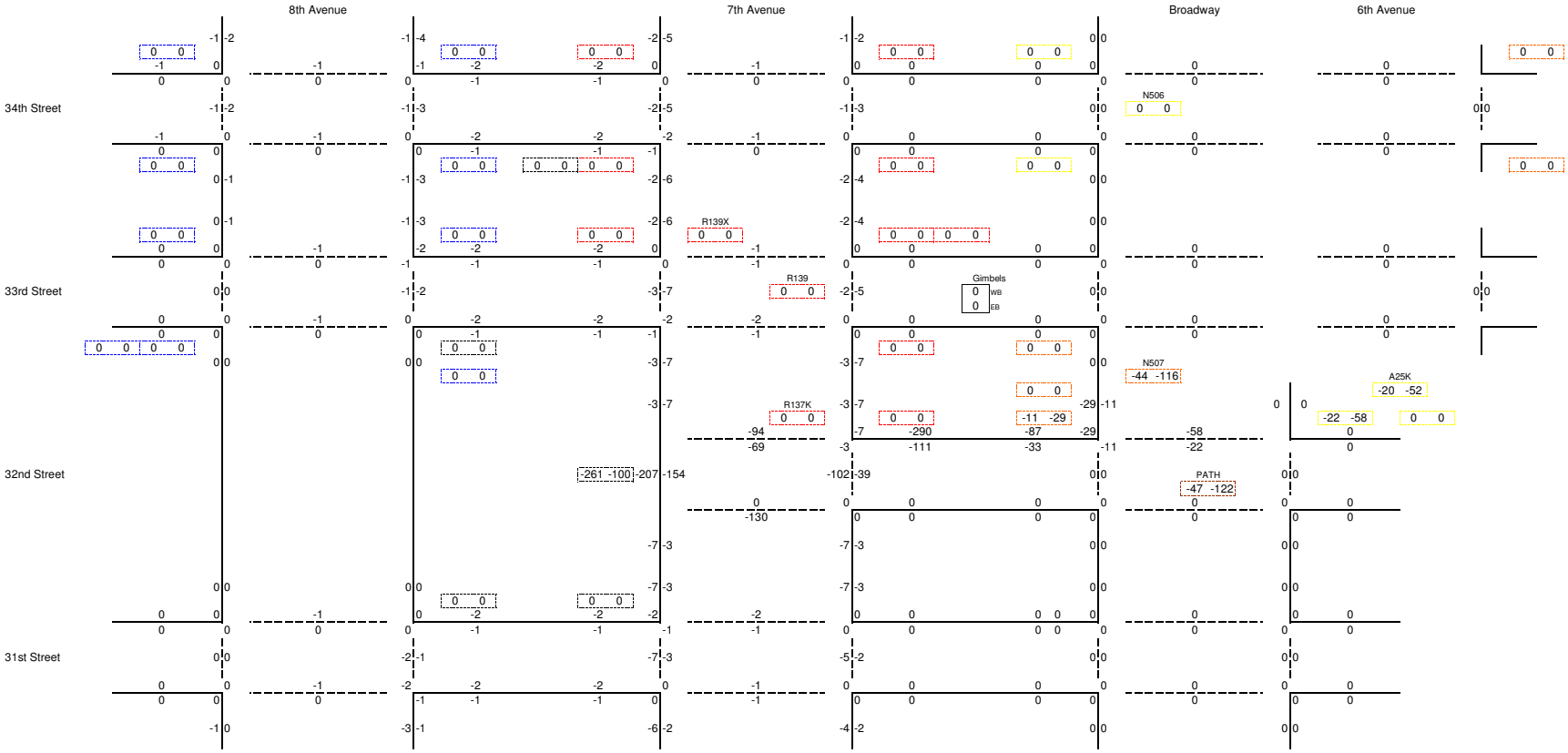

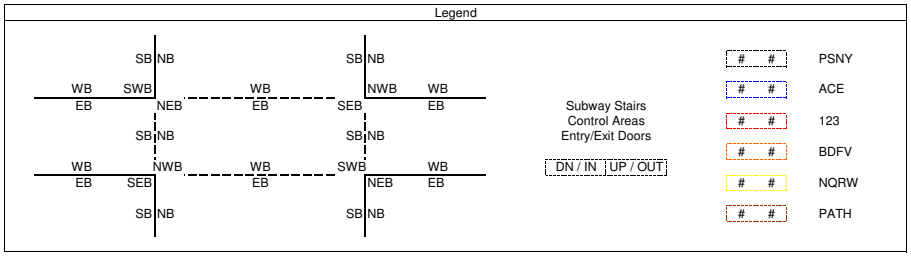

2014 Gimbels Passageway Capture Adjustment
PM Peak 15 Minutes
32N +# Total

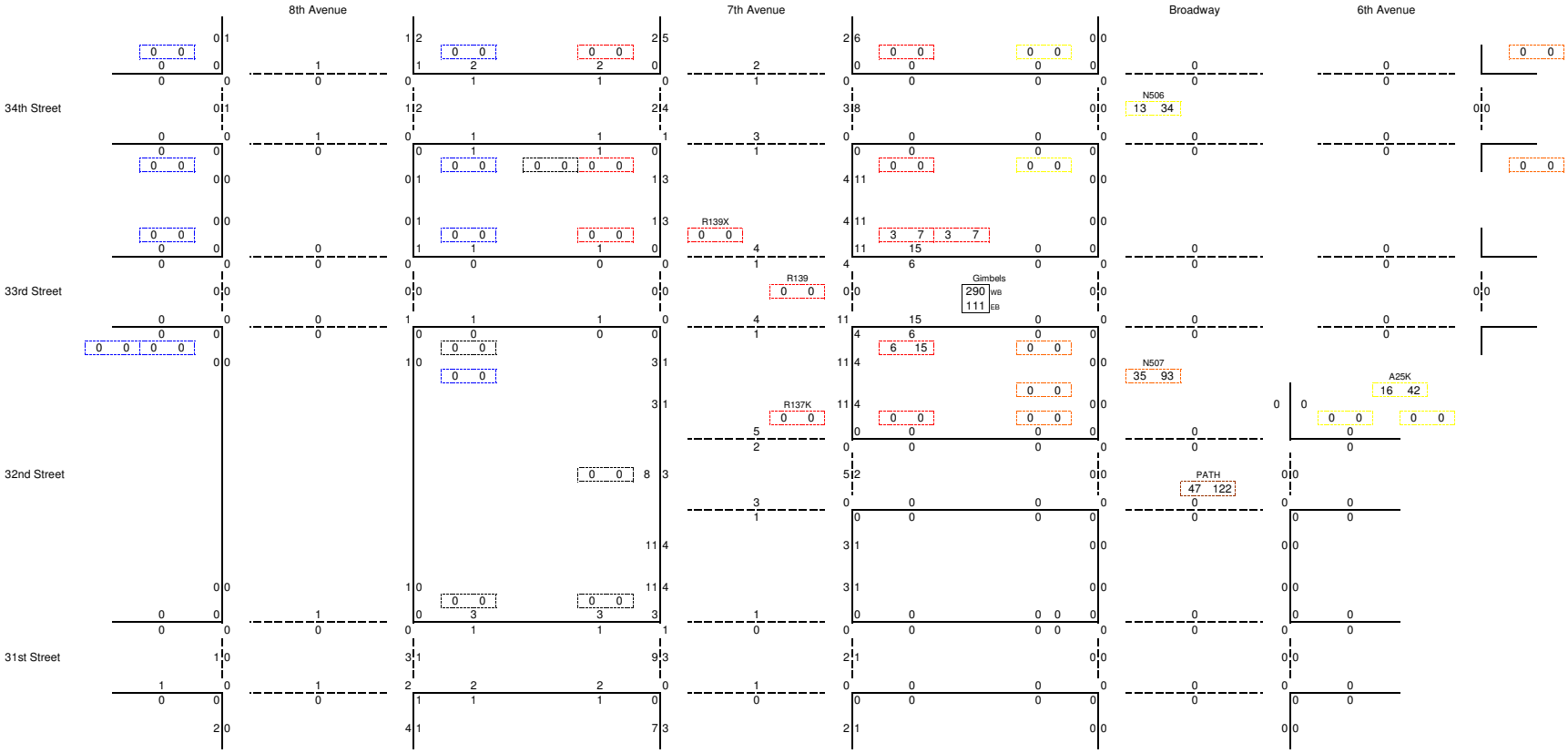

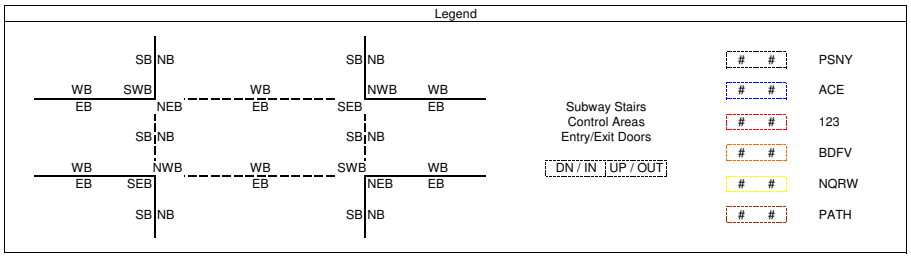

2014 Gimbels Passageway Capture Adjustment
PM Peak 15 Minutes
32N Total

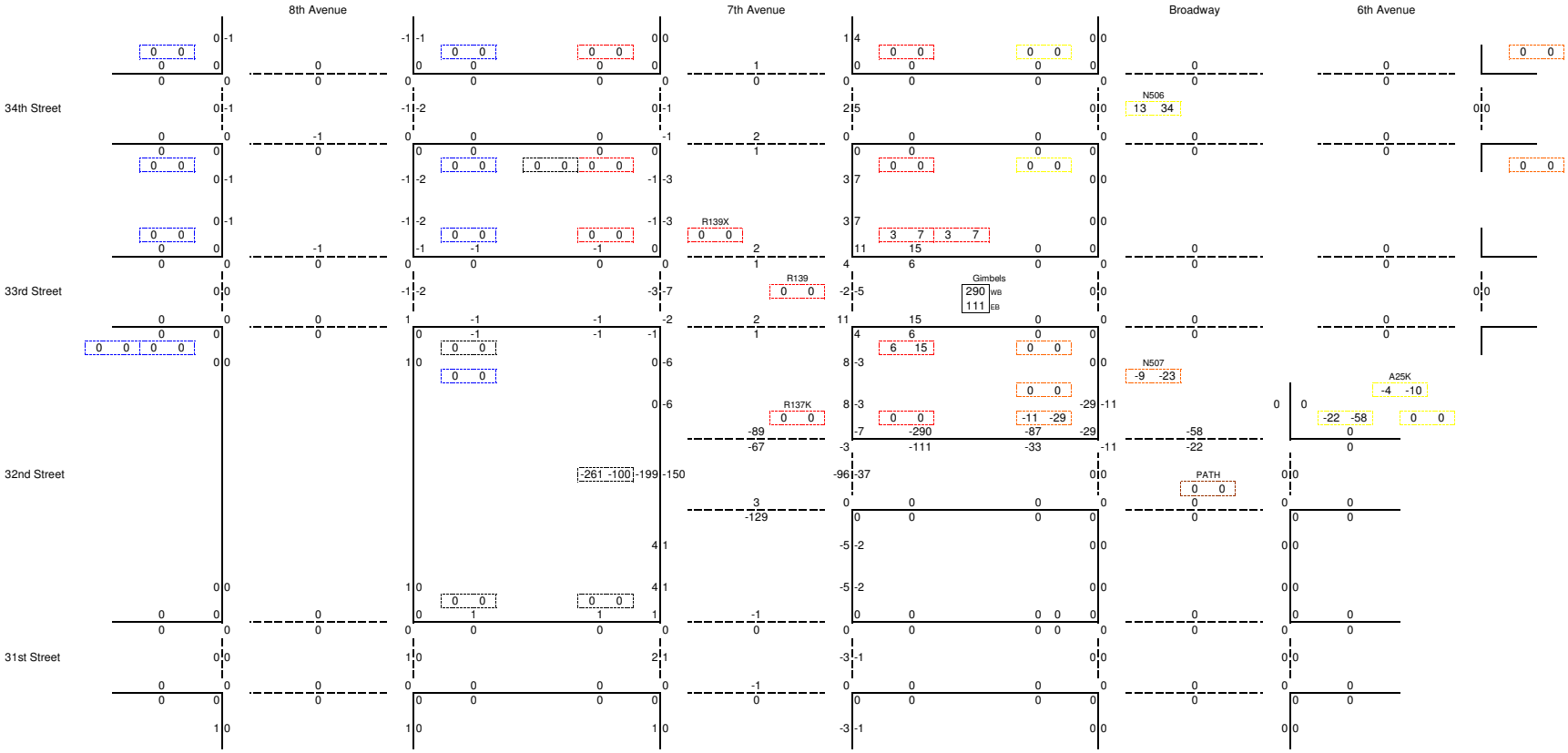

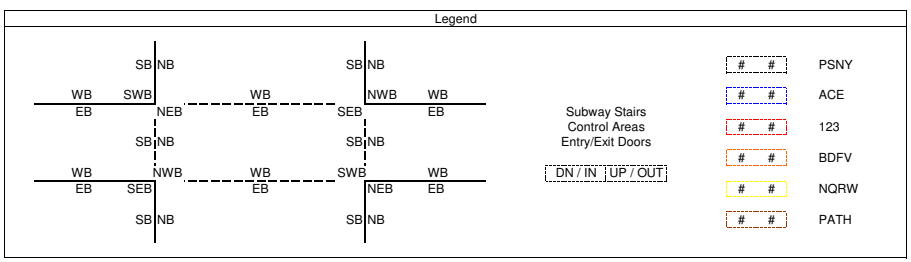

2014 Gimbels Passageway Capture Adjustment
PM Peak 15 Minutes
32S -# Total

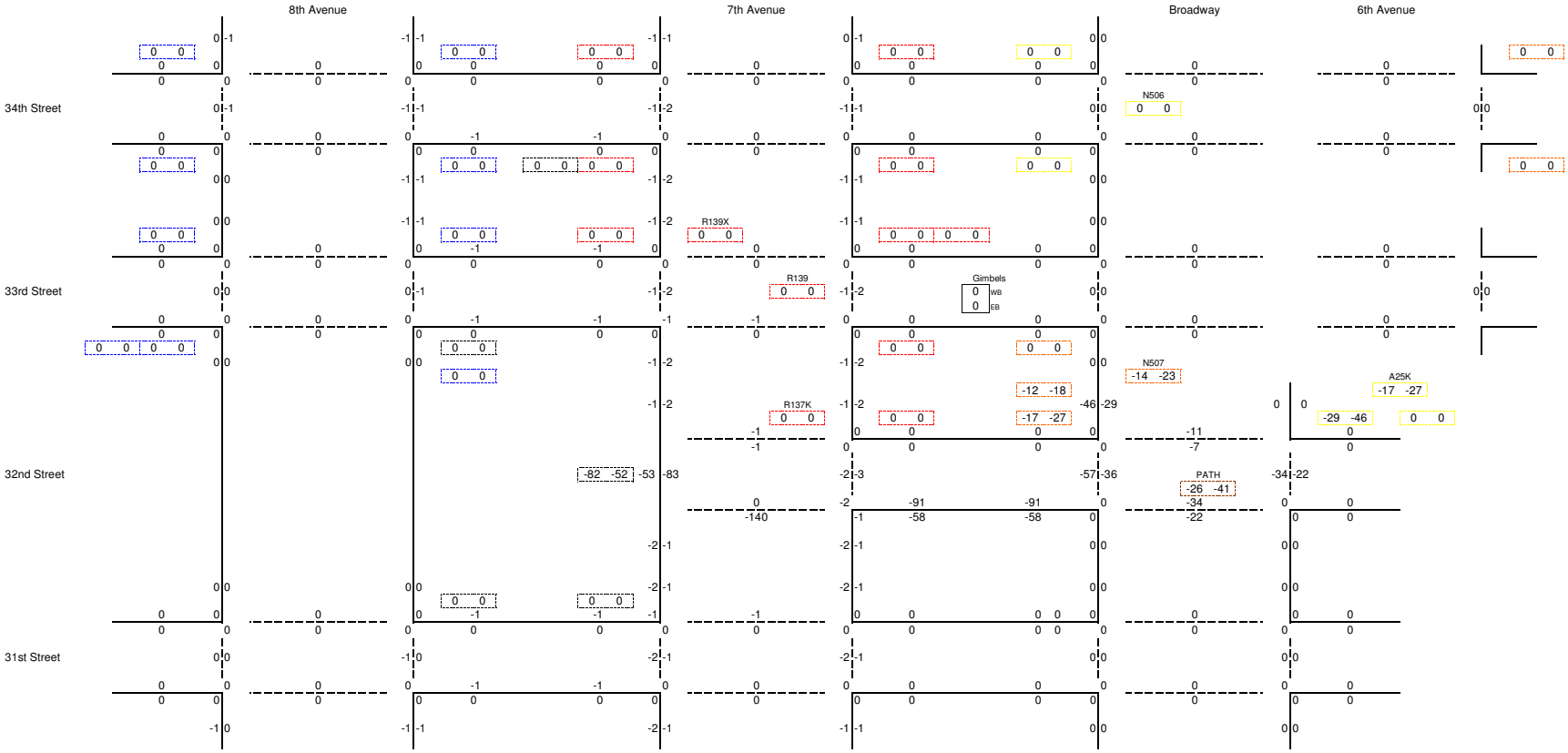

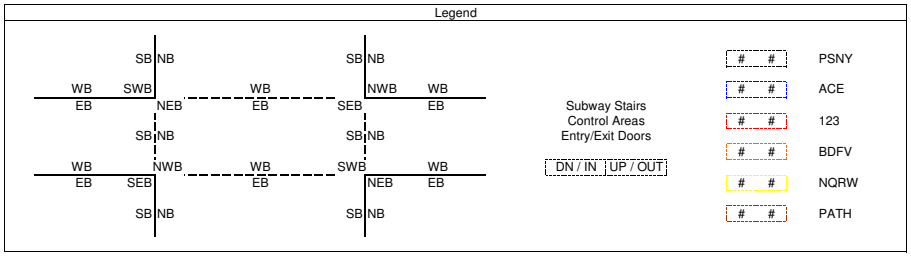

2014 Gimbels Passageway Capture Adjustment
PM Peak 15 Minutes
32S +# Total

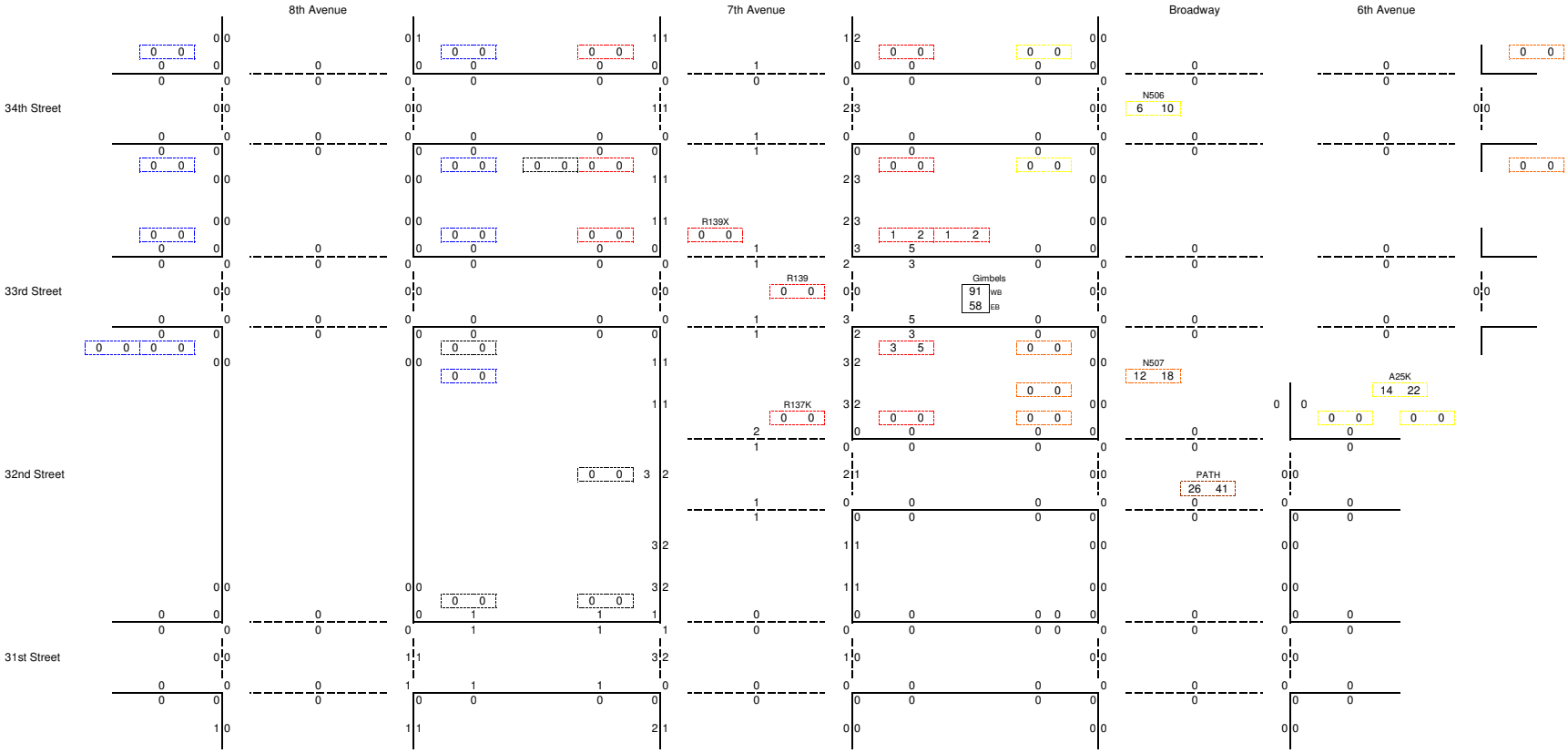

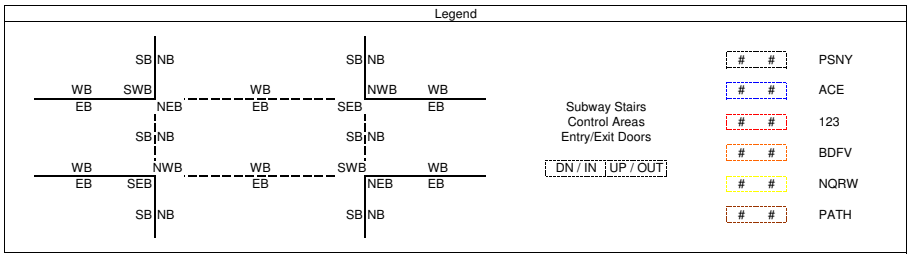

2014 Gimbels Passageway Capture Adjustment
PM Peak 15 Minutes
32S Total

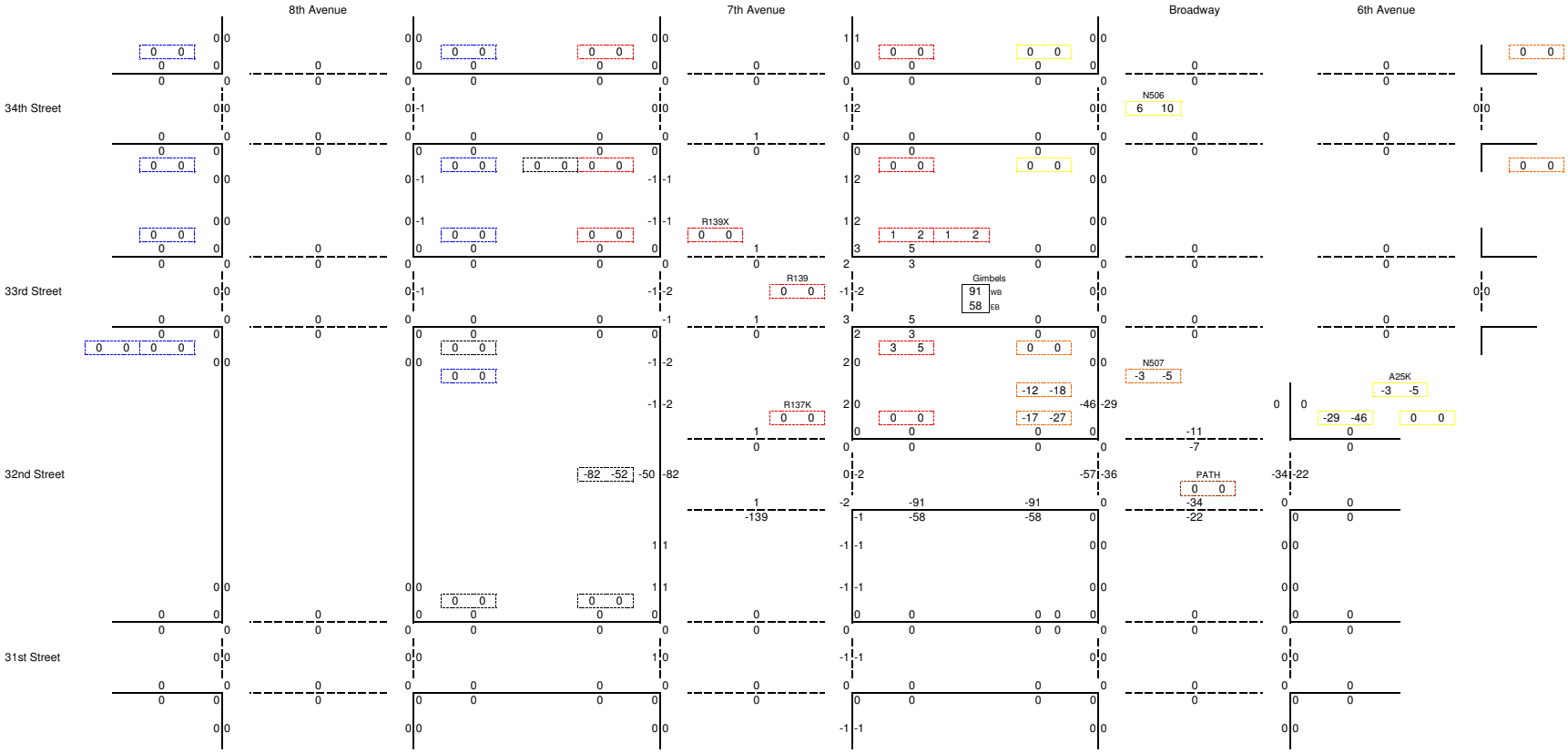

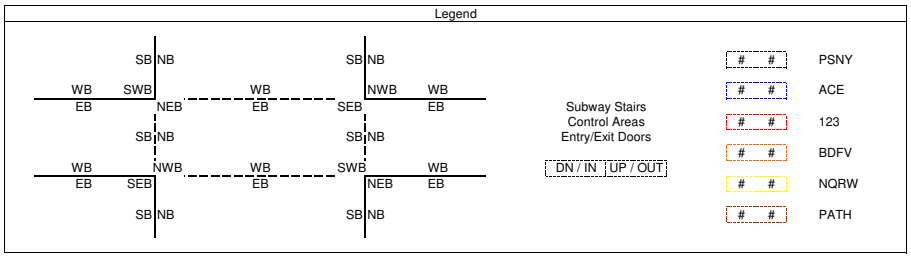

2014 Gimbels Passageway Capture Adjustment
PM Peak 15 Minutes
Total Adjustment

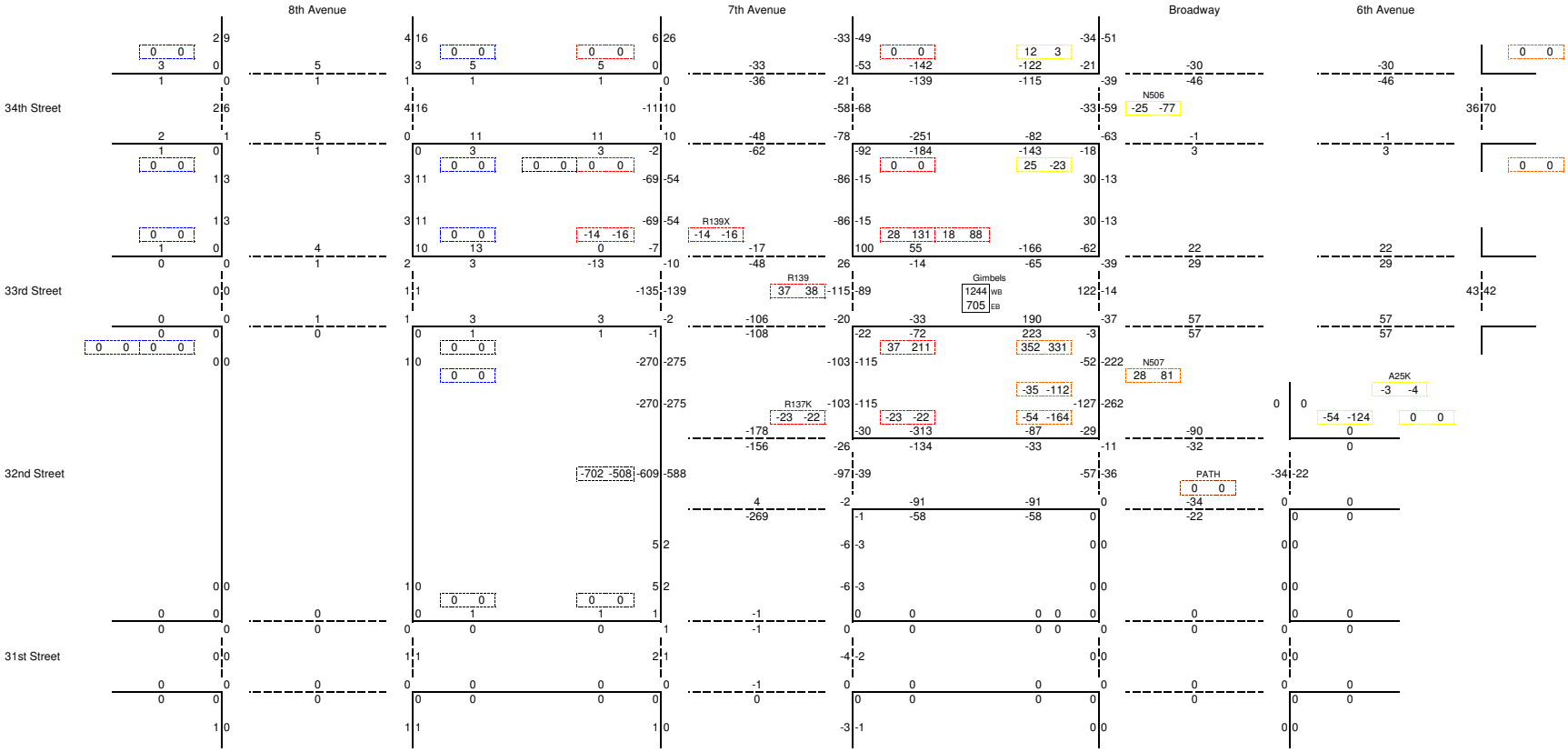

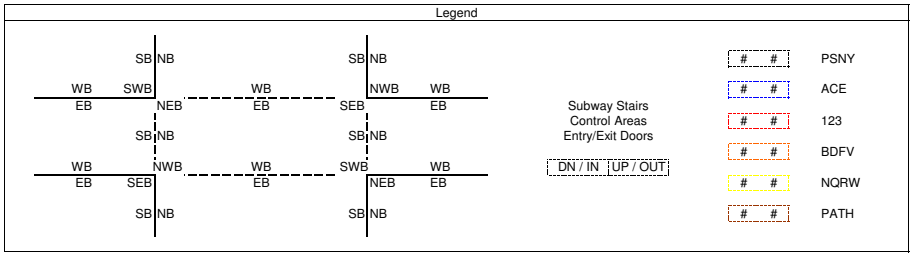

2014 Gimbels Passageway Capture Adjustment
SAT Peak 15 Minutes
35-37 -# Total

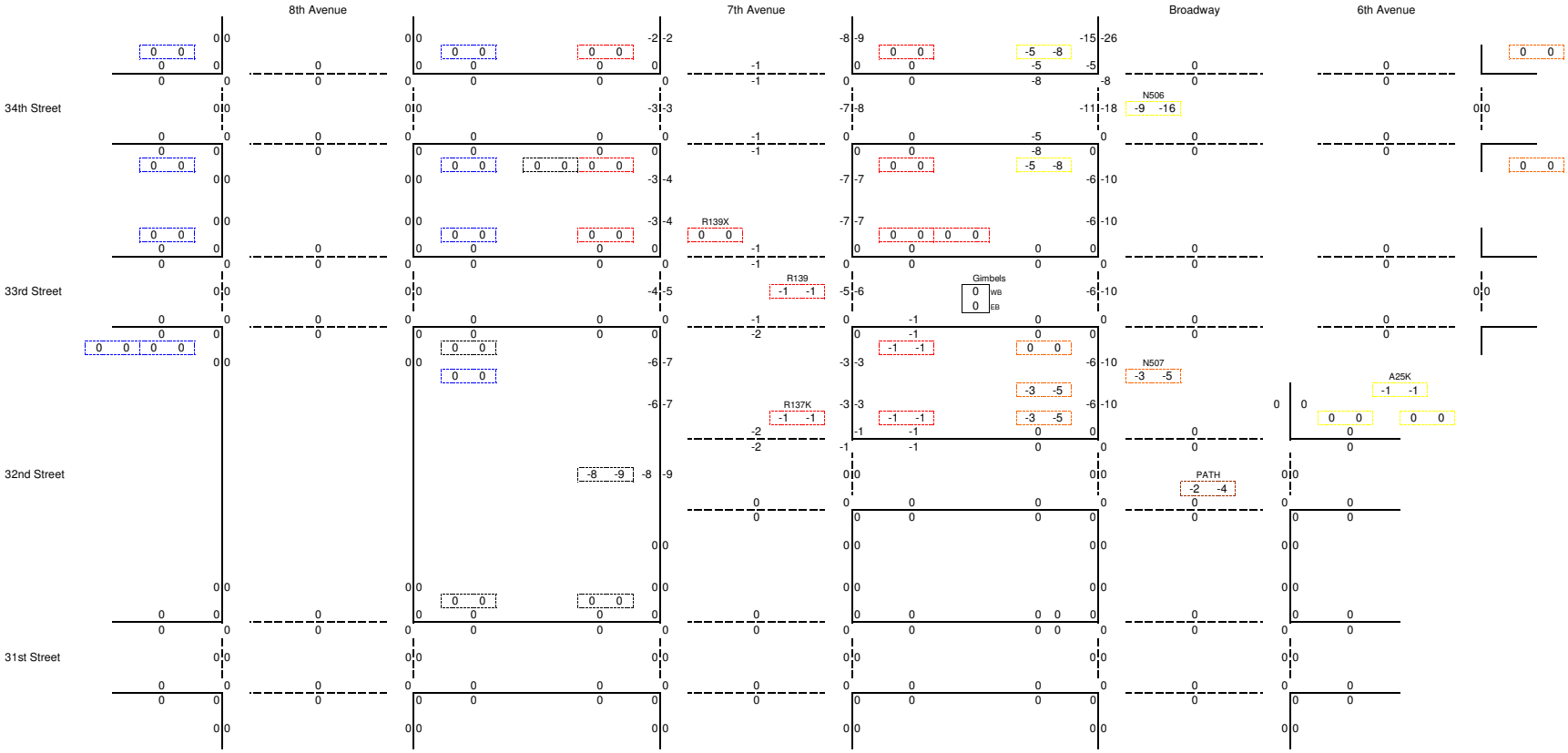

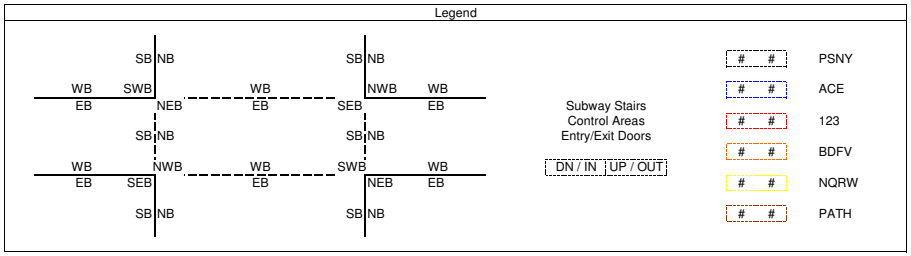

2014 Gimbels Passageway Capture Adjustment
SAT Peak 15 Minutes
35-37 +# Total

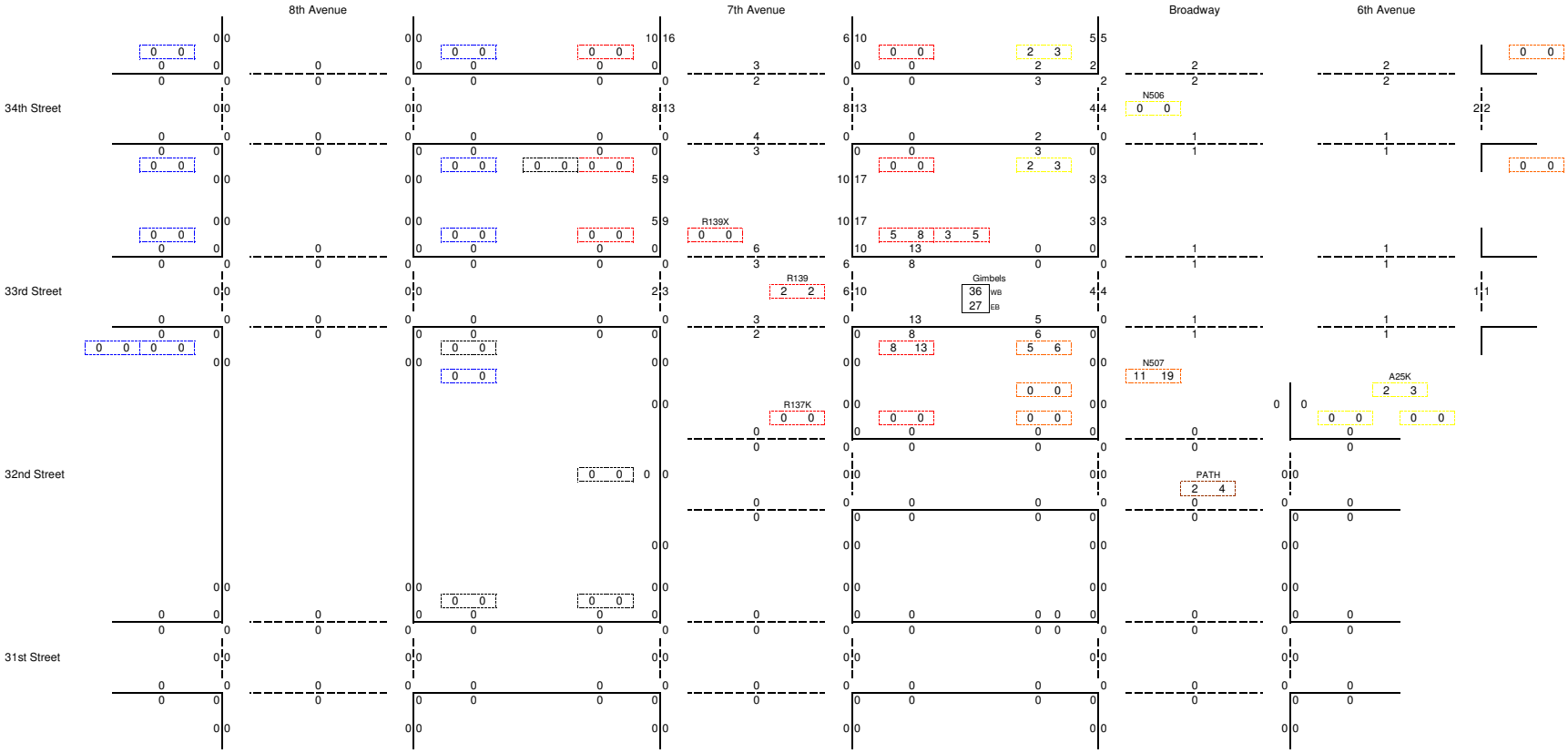

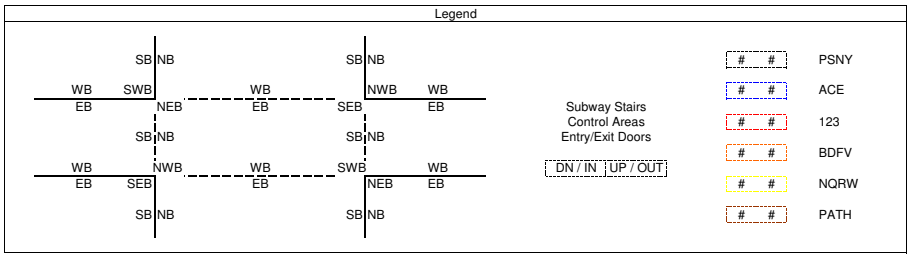

2014 Gimbels Passageway Capture Adjustment
SAT Peak 15 Minutes
35-37 Total

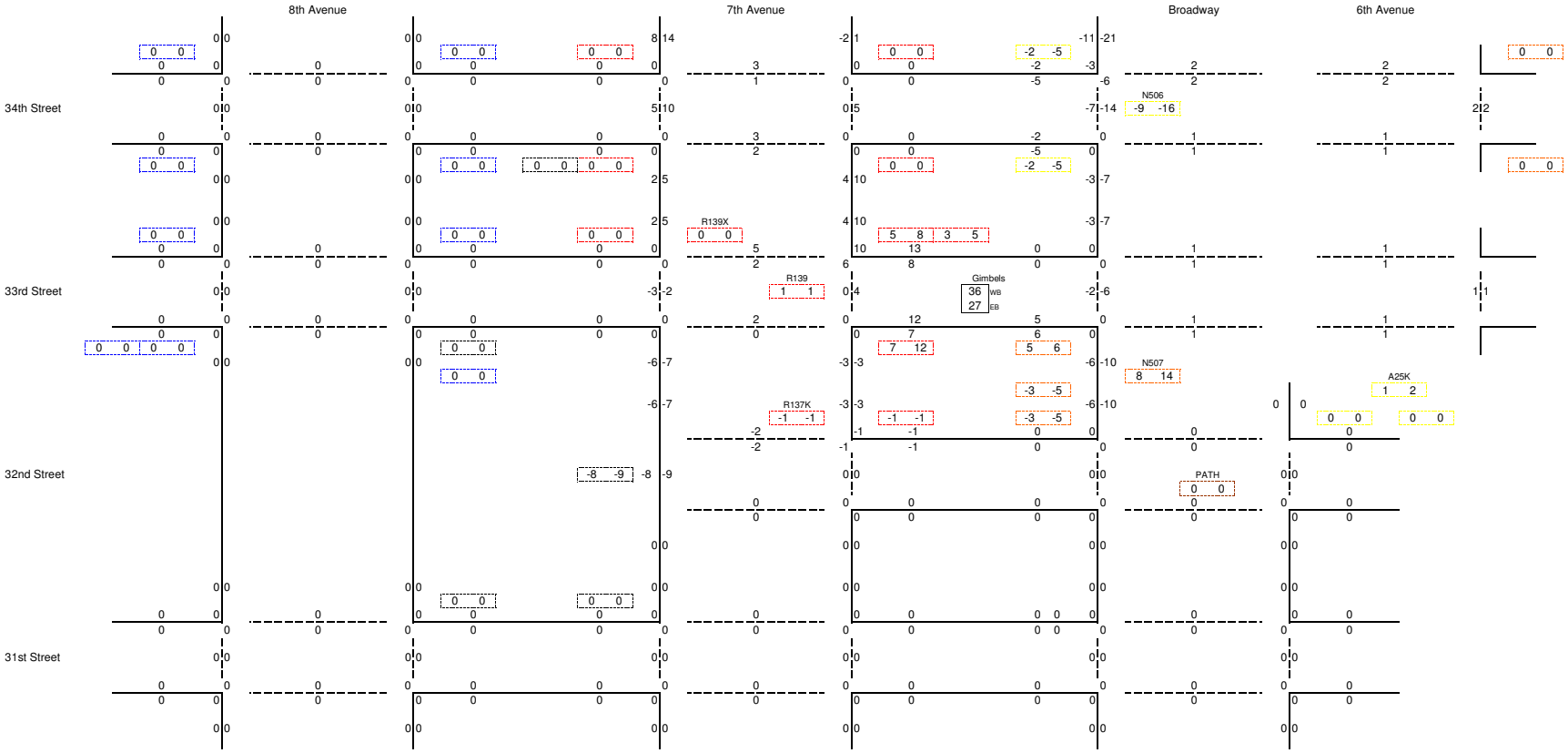

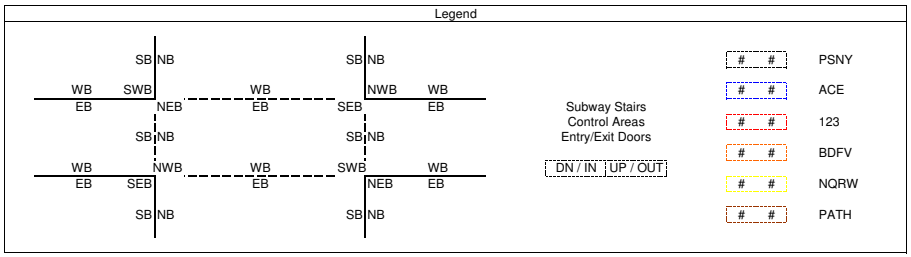

2014 Gimbels Passageway Capture Adjustment
SAT Peak 15 Minutes
34N -# Total

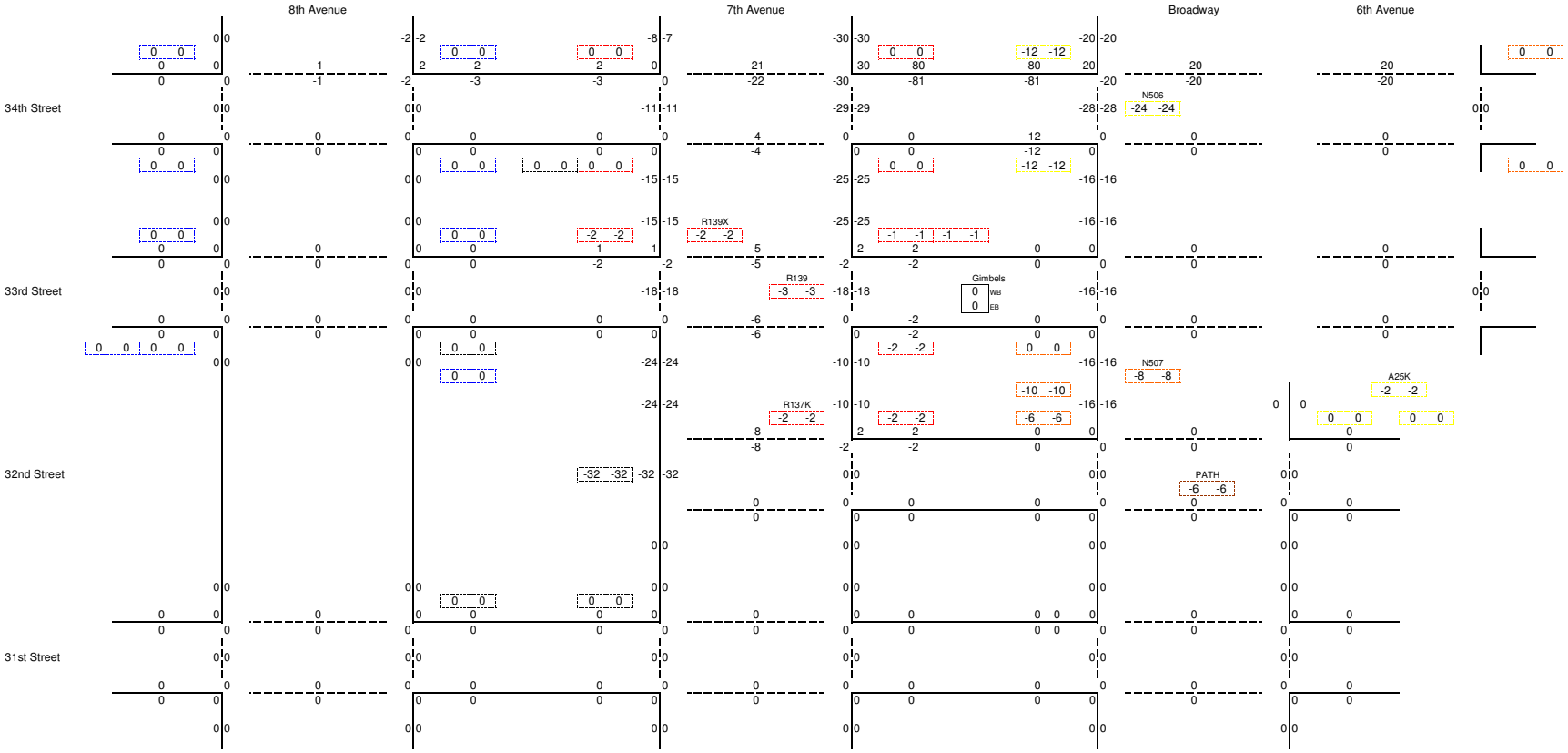

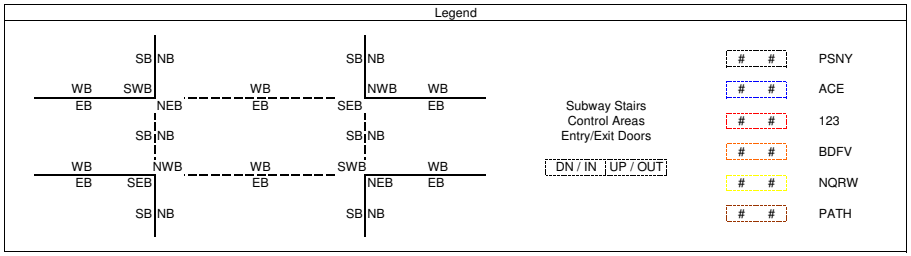

2014 Gimbels Passageway Capture Adjustment
SAT Peak 15 Minutes
34N +# Total

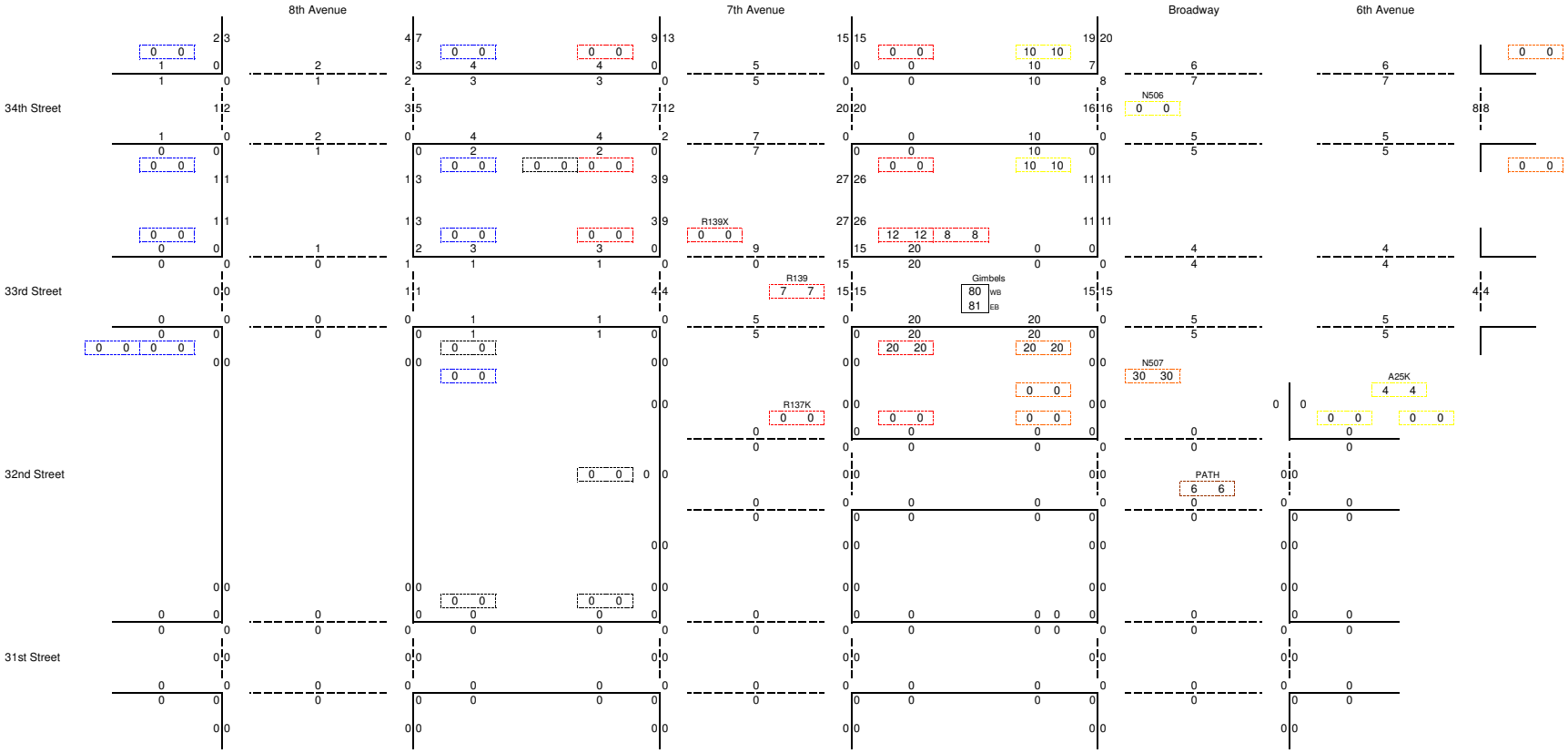

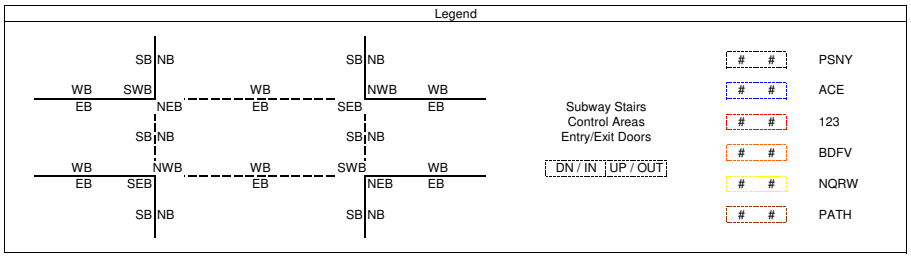

2014 Gimbels Passageway Capture Adjustment
SAT Peak 15 Minutes
34N Total

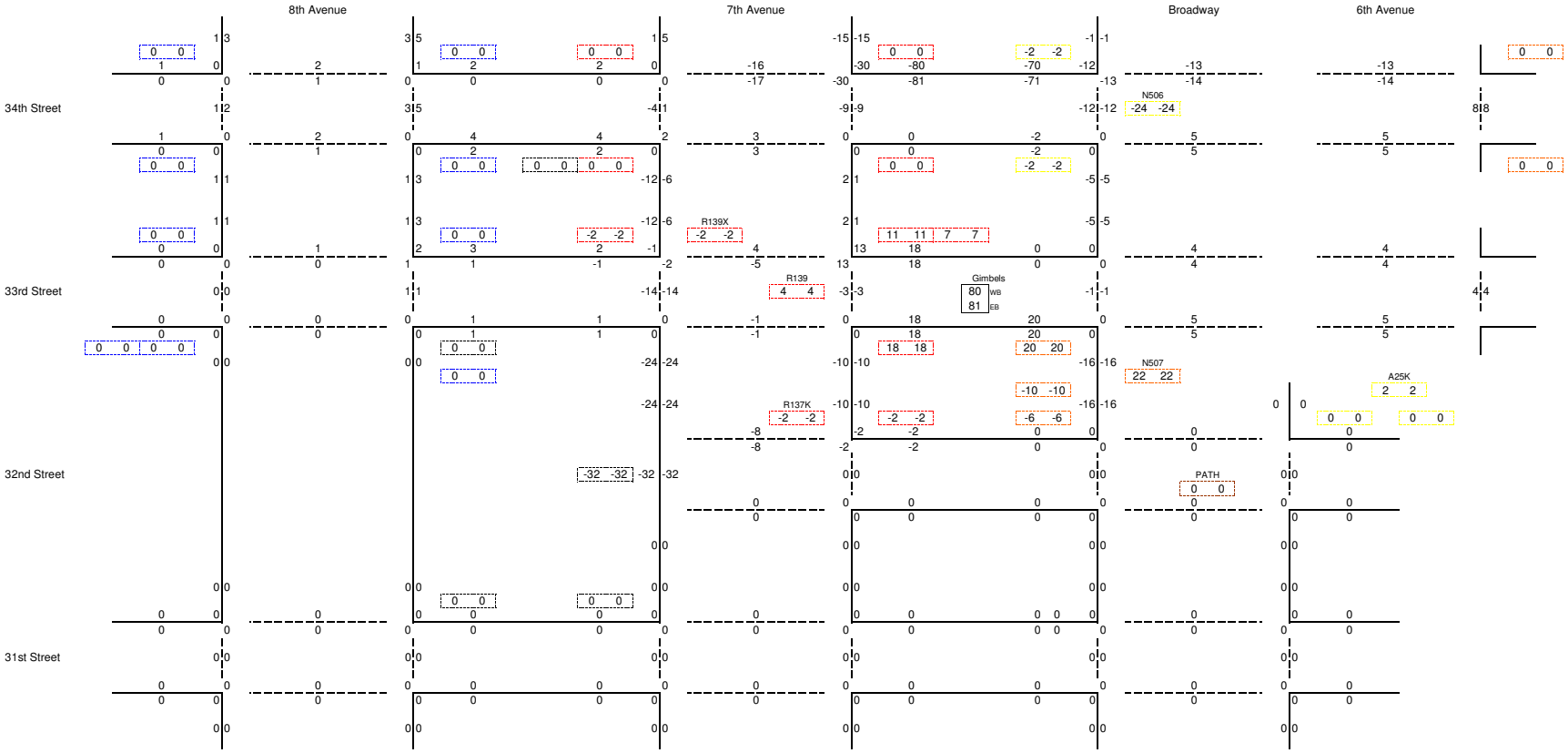

Legend

Subway Stairs
Control Areas
Entry/Exit Doors

DN / IN | UP / OUT

PSNY
ACE
123
BDFV
NQRW
PATH

2014 Gimbels Passageway Capture Adjustment
SAT Peak 15 Minutes
34S -# Total

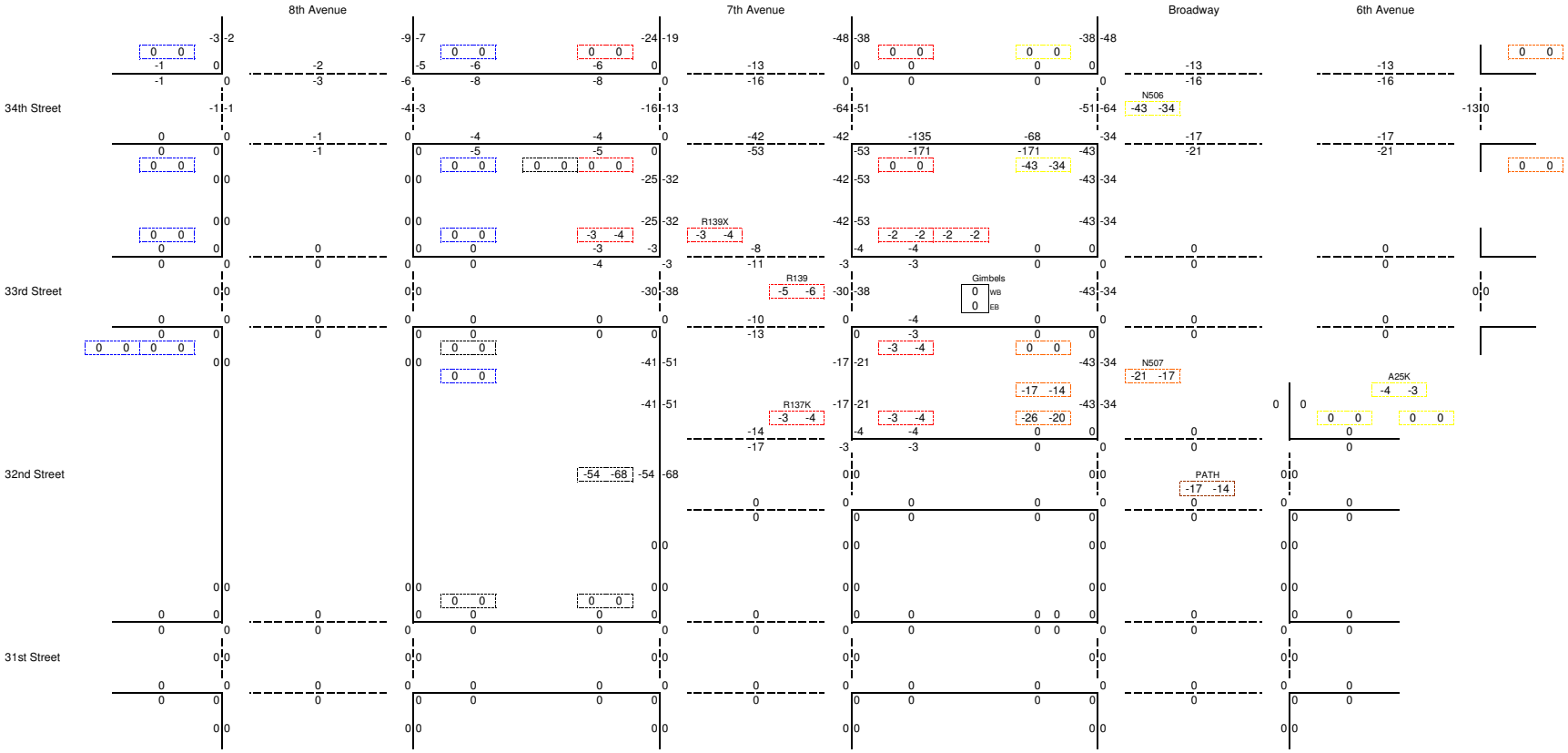

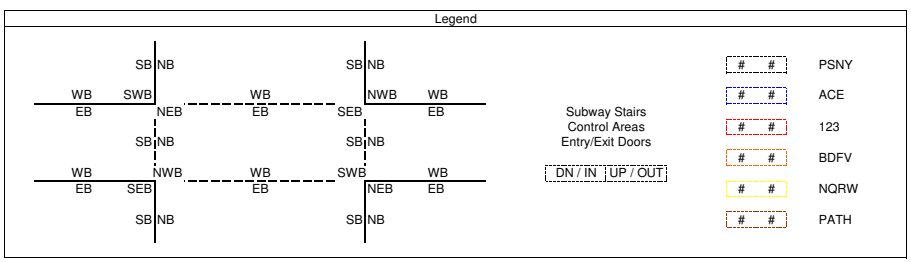

2014 Gimbels Passageway Capture Adjustment
SAT Peak 15 Minutes
34S +# Total

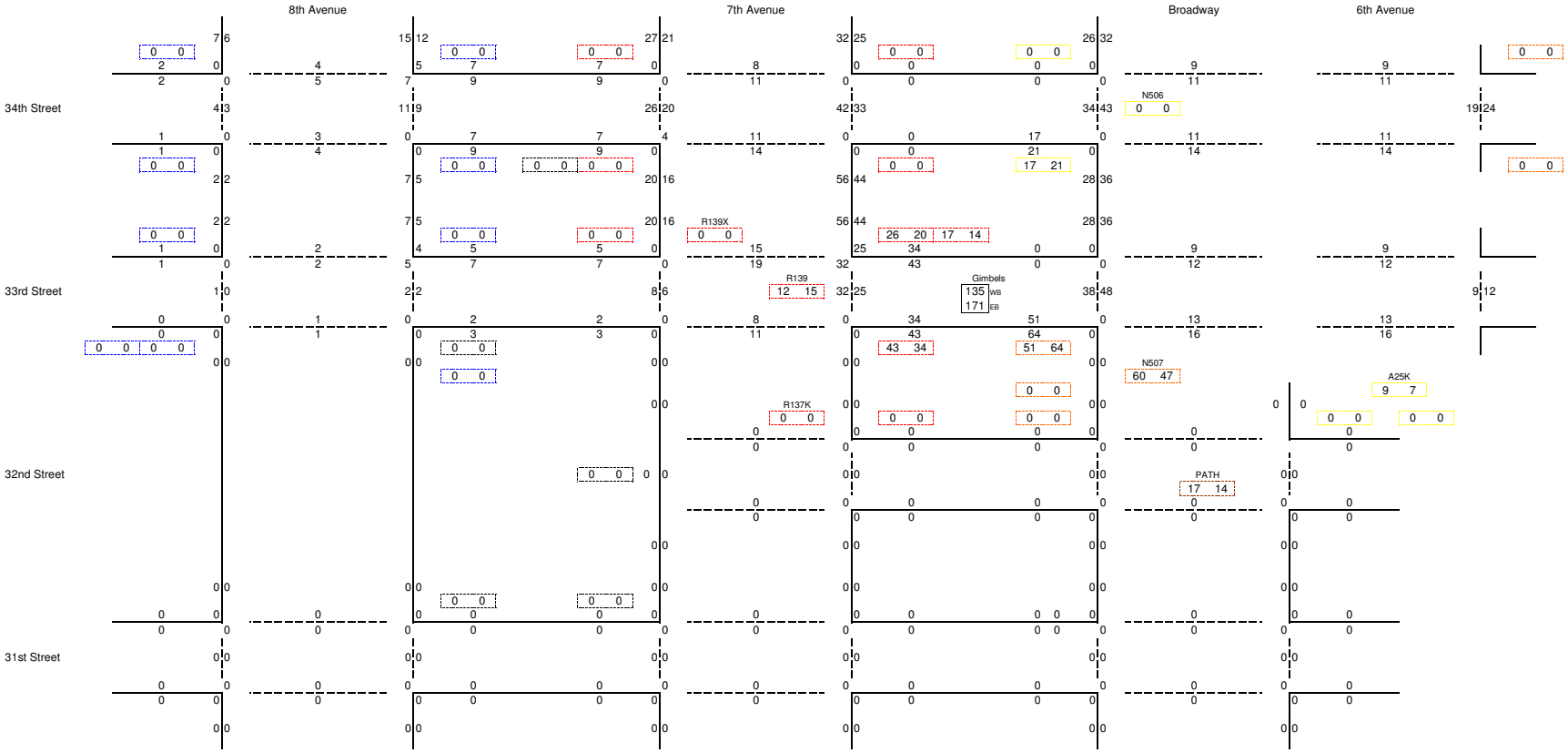

Legend

Subway Stairs
Control Areas
Entry/Exit Doors

DN / IN | UP / OUT

PSNY
ACE
123
BDFV
NQRW
PATH

2014 Gimbels Passageway Capture Adjustment
SAT Peak 15 Minutes
34S Total

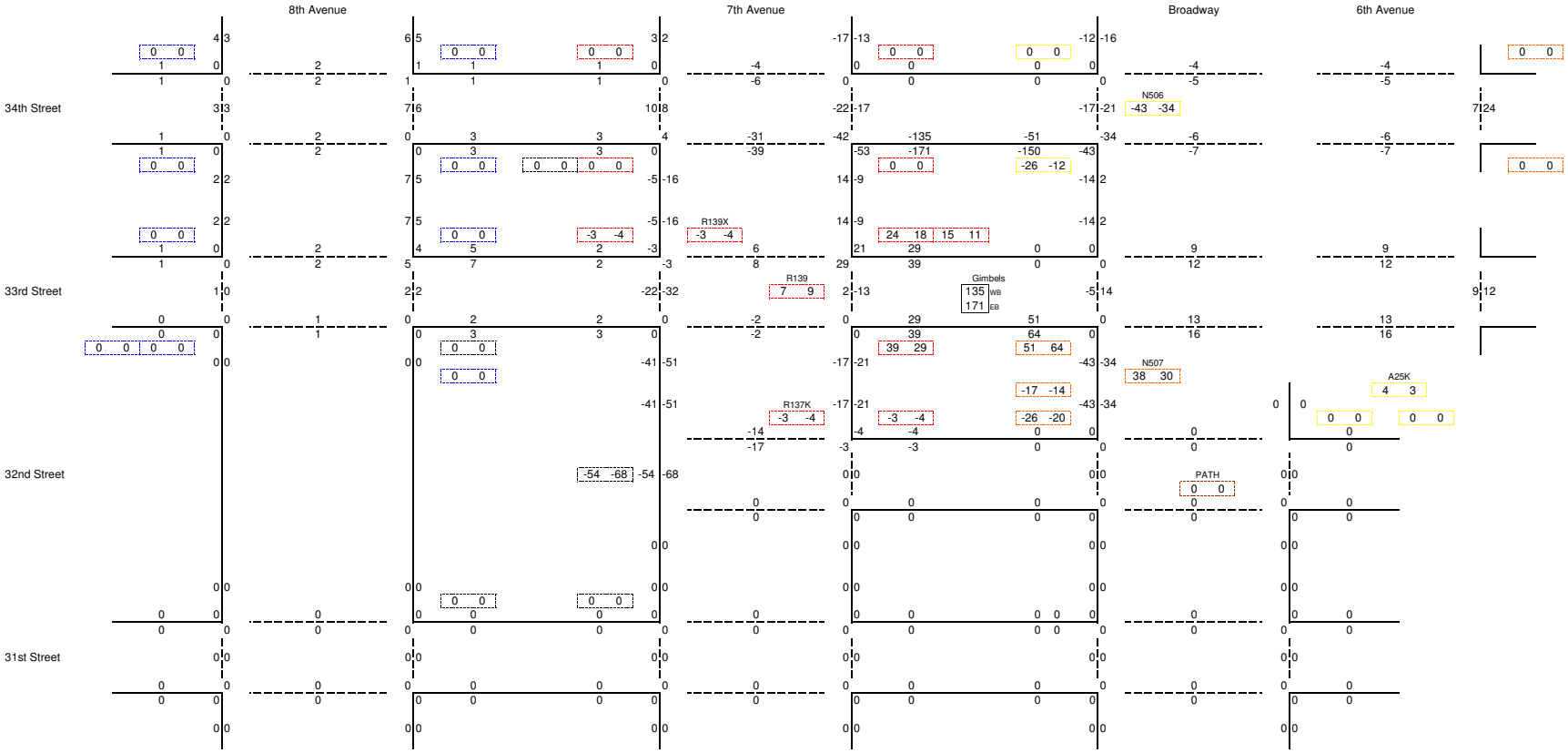

Legend

Subway Stairs
Control Areas
Entry/Exit Doors

DN / IN | UP / OUT

PSNY
ACE
123
BDFV
NQRW
PATH

2014 Gimbels Passageway Capture Adjustment
SAT Peak 15 Minutes
33N -# Total

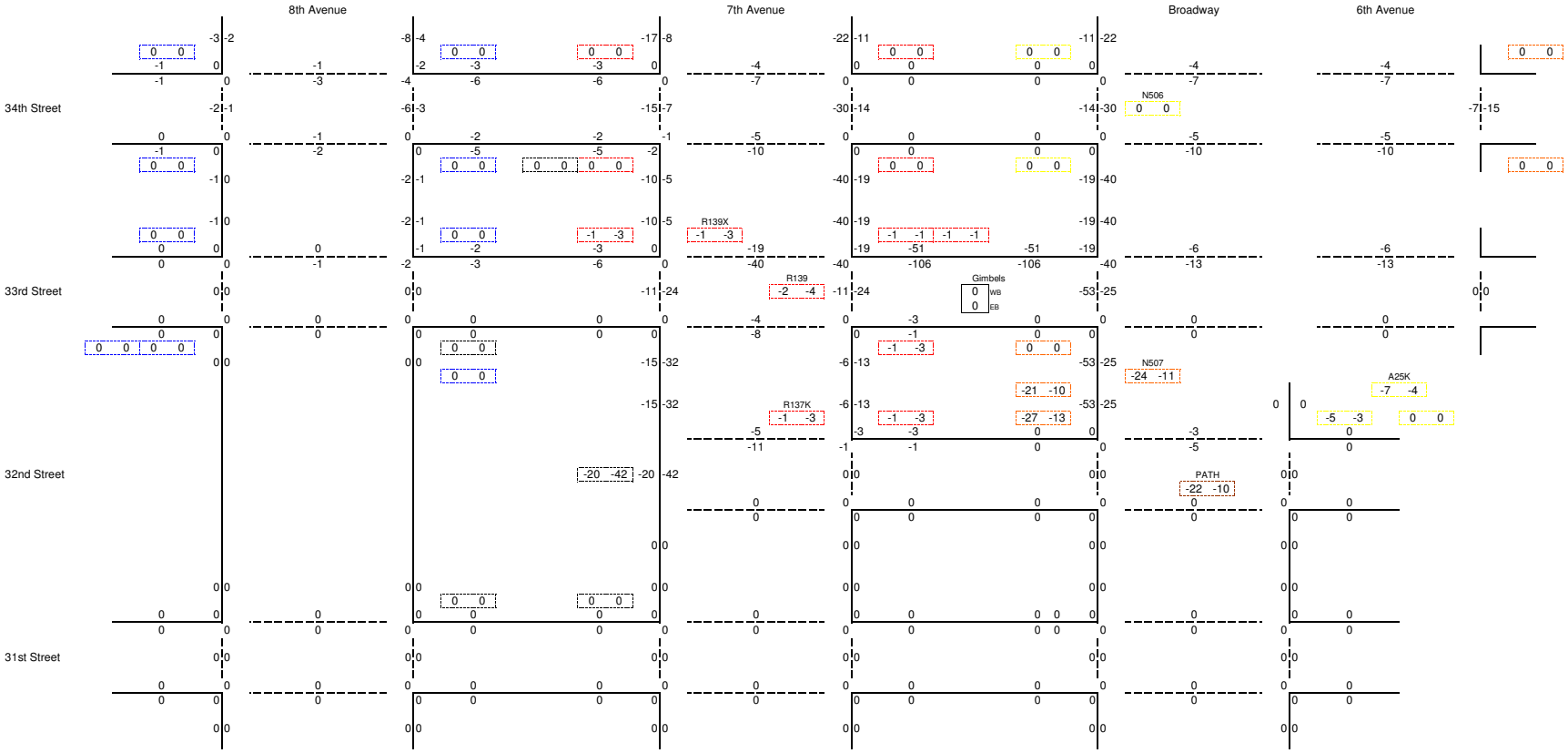

Legend

SB NB
WB SWB
EB
NEB
WB
EB
SB NB
NWB WB
SEB EB
SB NB
WB NWB
EB SEB
SB NB
WB
EB
SWB WB
NEB EB
SB NB

Subway Stairs
Control Areas
Entry/Exit Doors

DN / IN | UP / OUT

PSNY
ACE
123
BDFV
NQRW
PATH

2014 Gimbels Passageway Capture Adjustment
SAT Peak 15 Minutes
33N +# Total

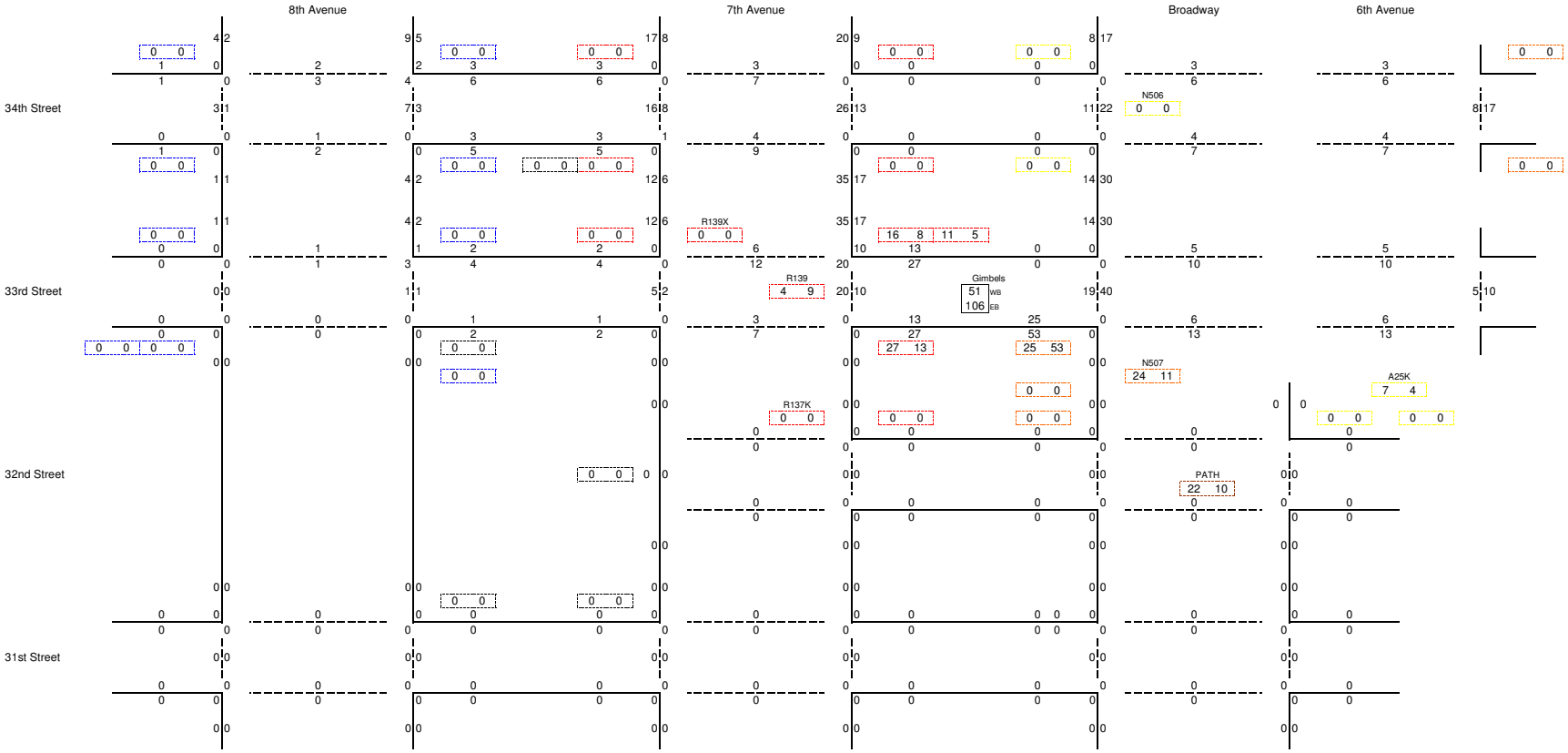

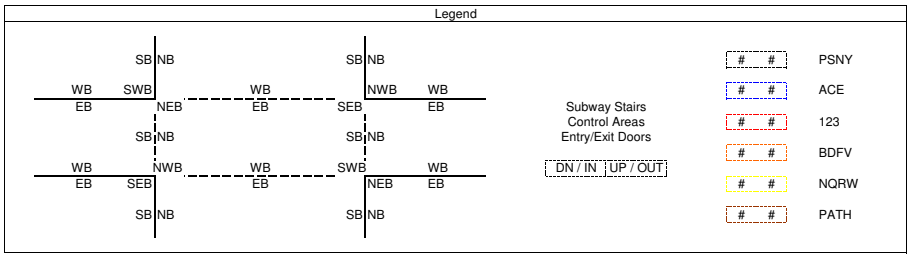

2014 Gimbels Passageway Capture Adjustment
SAT Peak 15 Minutes
33N Total

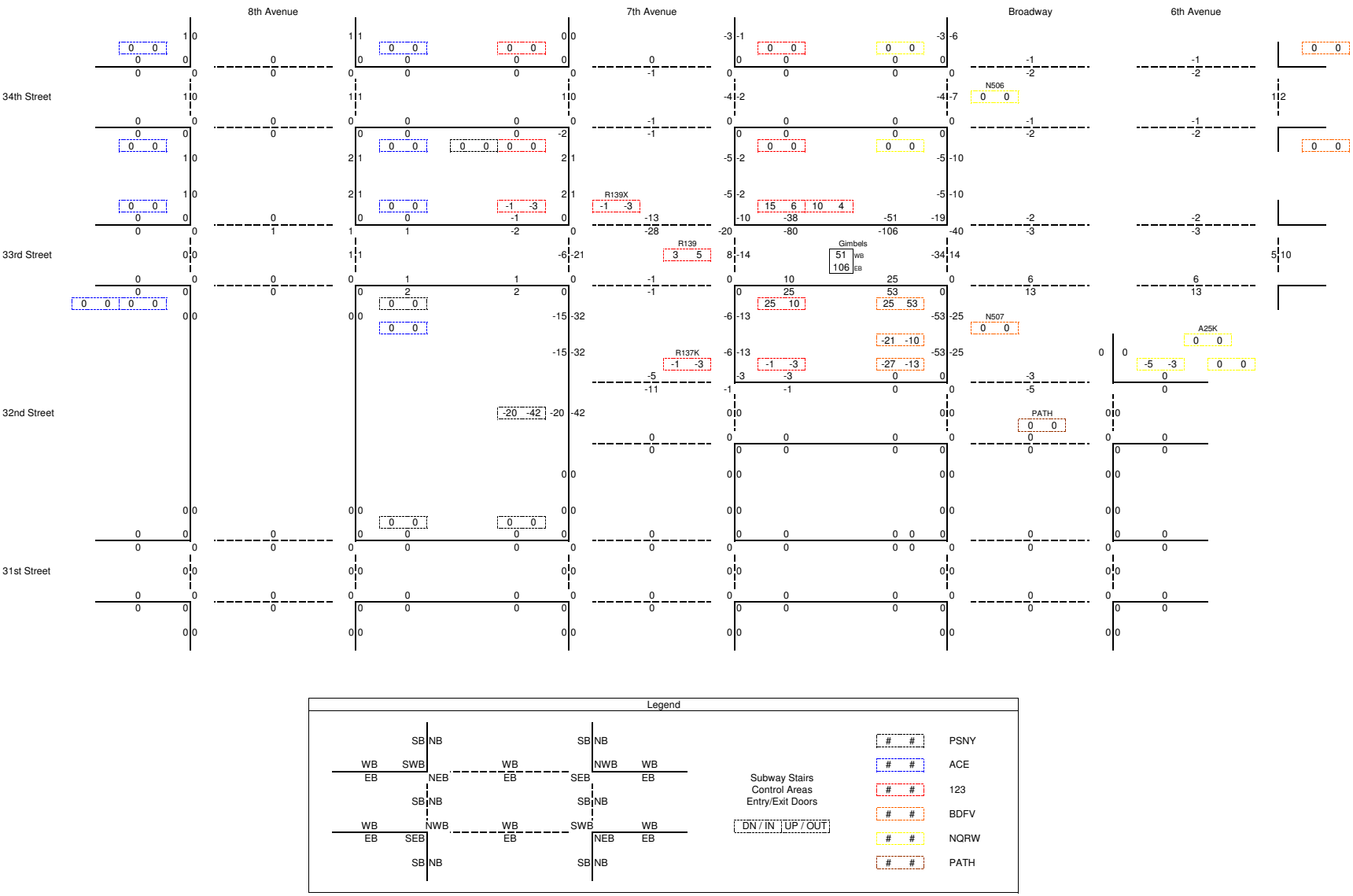

2014 Gimbels Passageway Capture Adjustment
SAT Peak 15 Minutes
33S -# Total

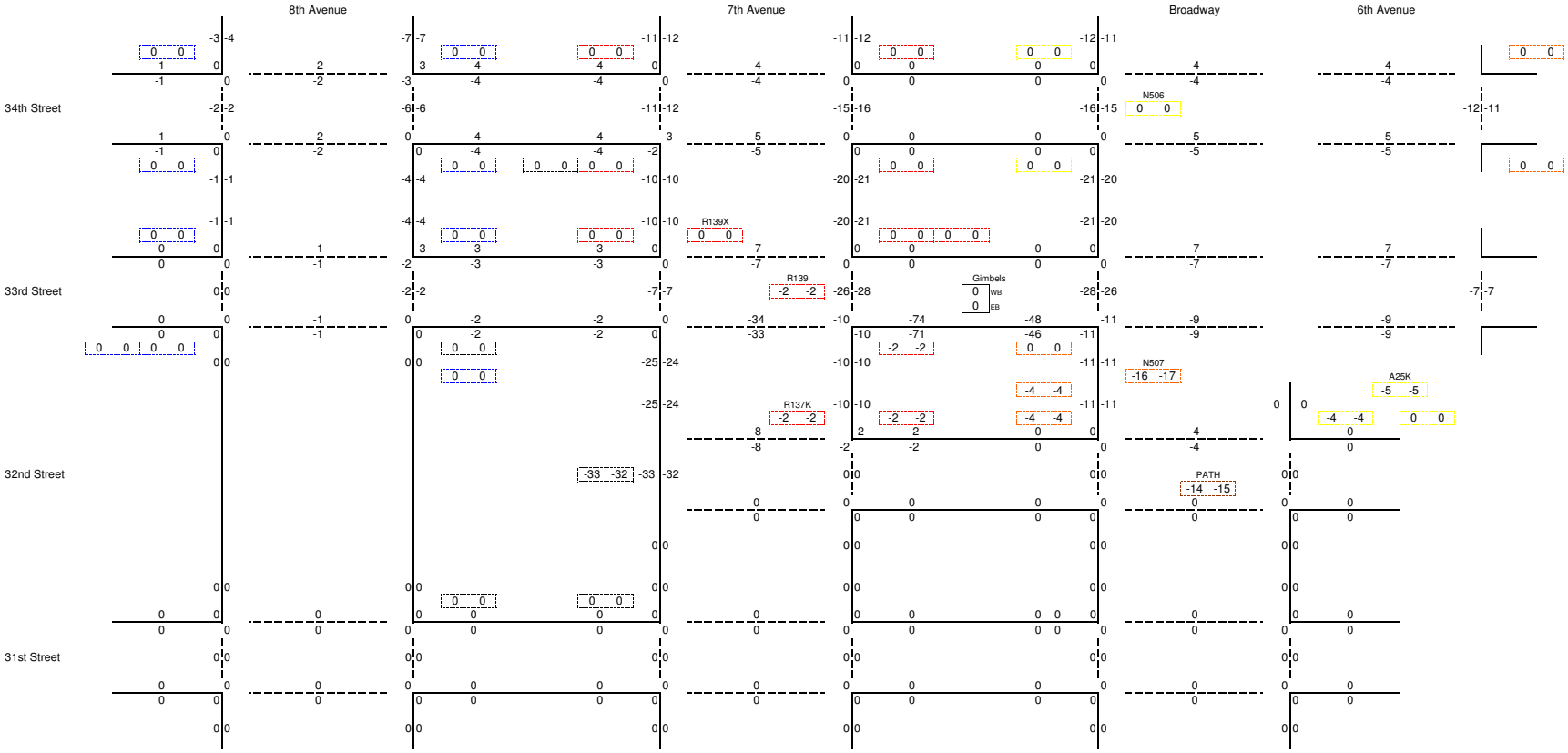

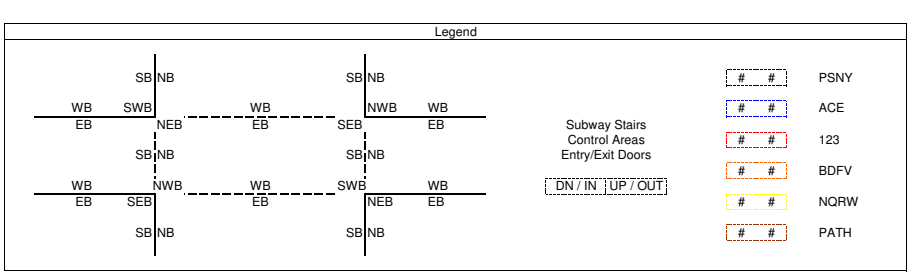

2014 Gimbels Passageway Capture Adjustment
SAT Peak 15 Minutes
33S +# Total

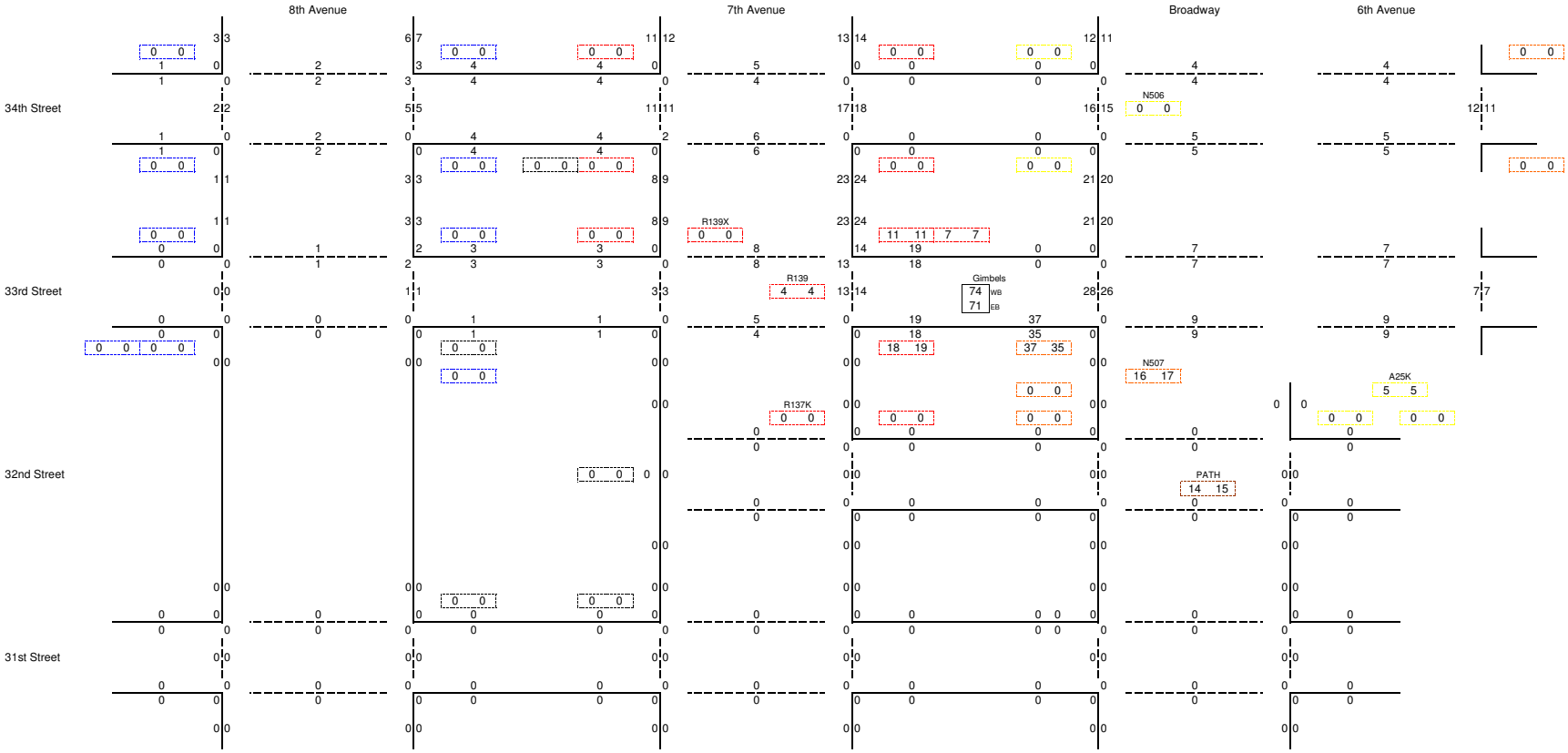

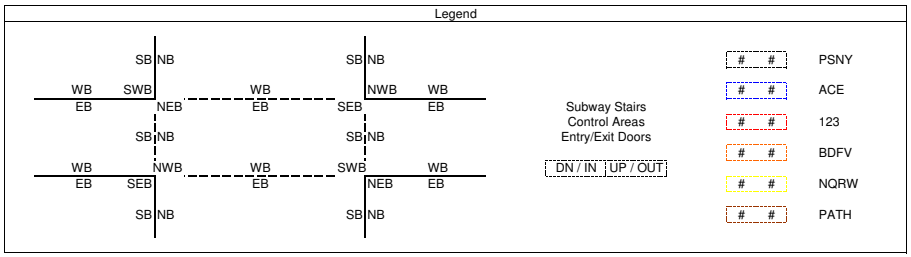

2014 Gimbels Passageway Capture Adjustment
SAT Peak 15 Minutes
33S Total

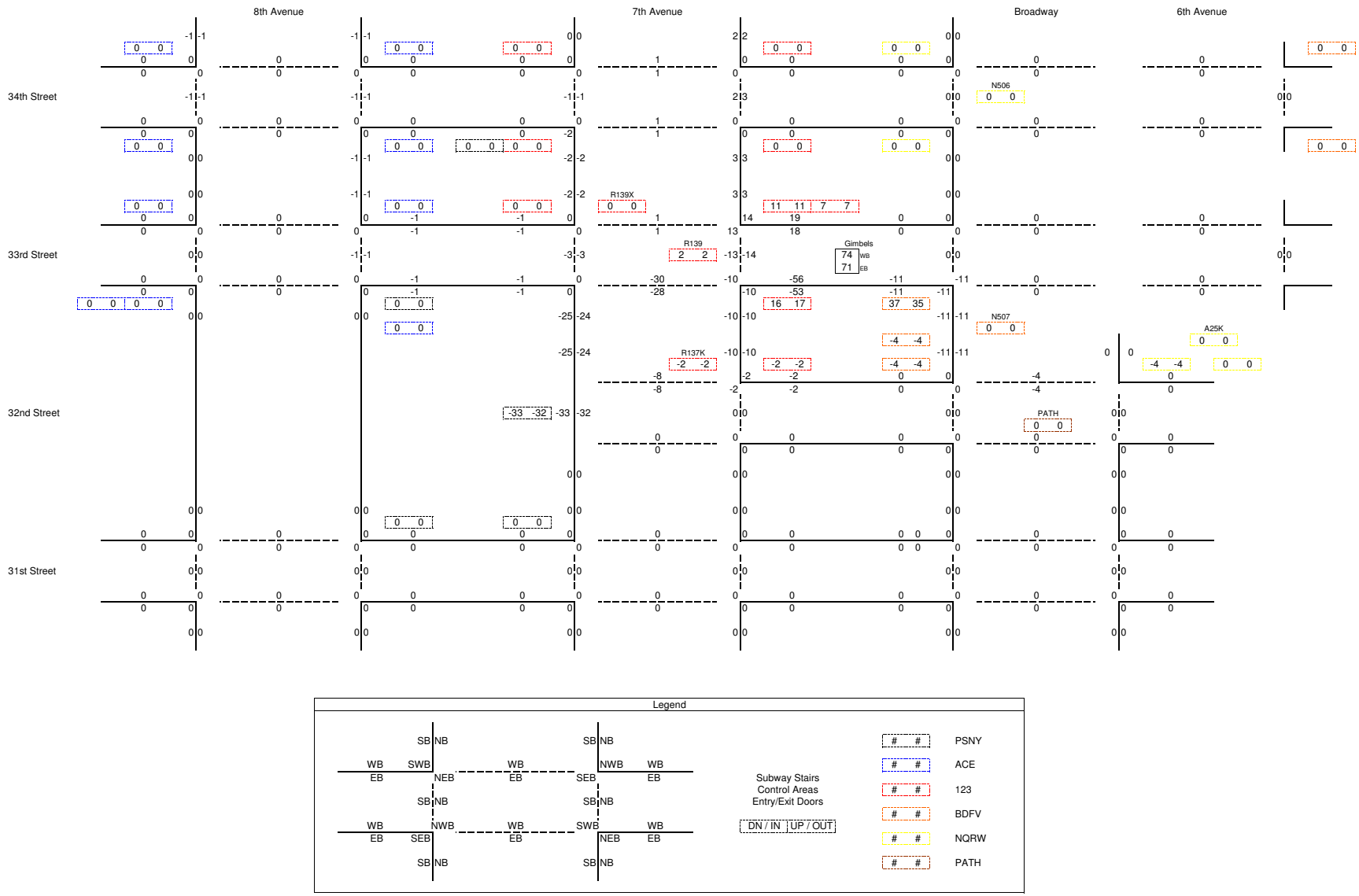

2014 Gimbels Passageway Capture Adjustment
SAT Peak 15 Minutes
32N -# Total

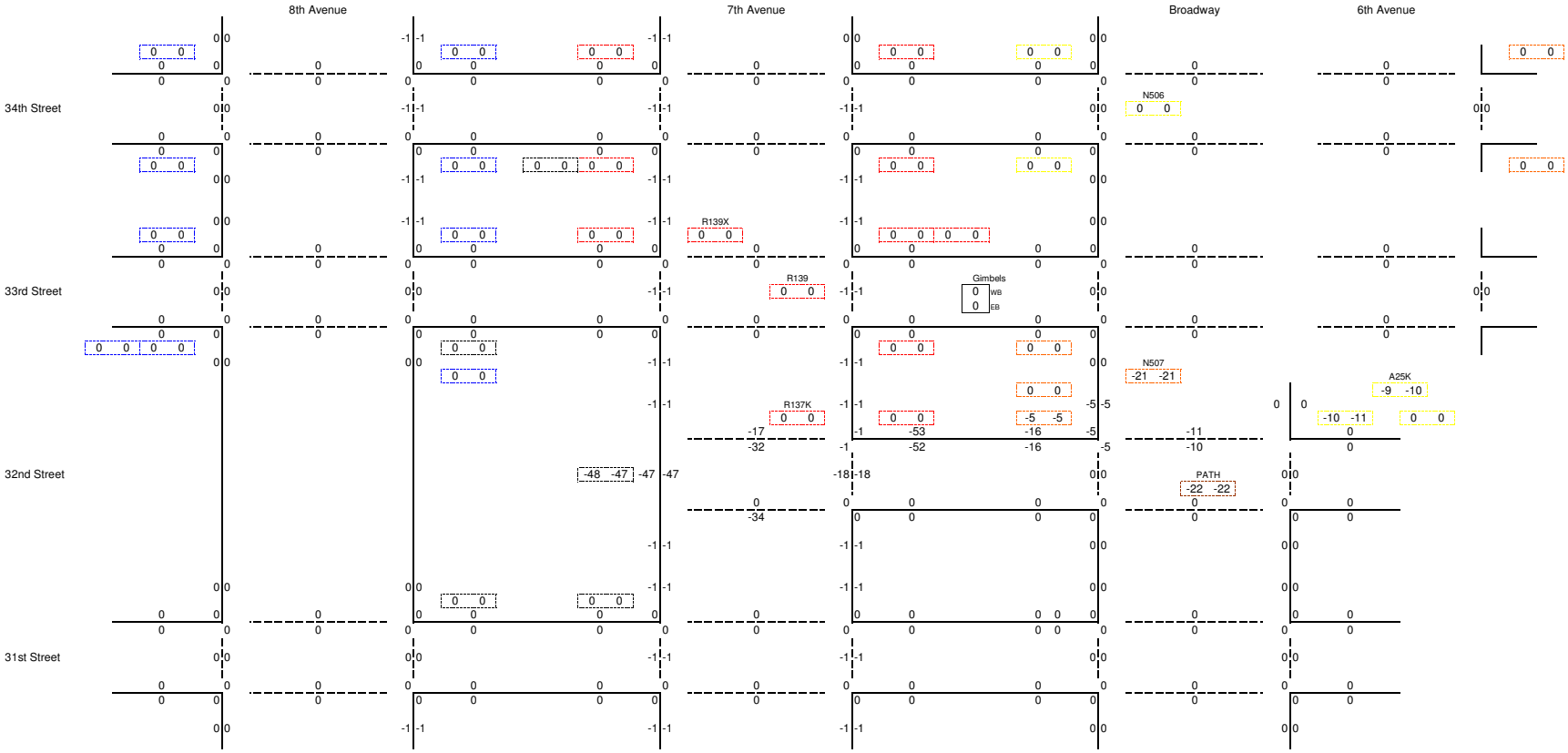

Legend

SB NB
WB SWB
EB
NEB
WB
EB
SB NB
NWB WB
SEB EB
SB NB
WB NWB
EB SEB
SB NB
WB SWB
EB NEB
SB NB

Subway Stairs
Control Areas
Entry/Exit Doors

DN / IN | UP / OUT

PSNY
ACE
123
BDFV
NQRW
PATH

2014 Gimbels Passageway Capture Adjustment
SAT Peak 15 Minutes
32N +# Total

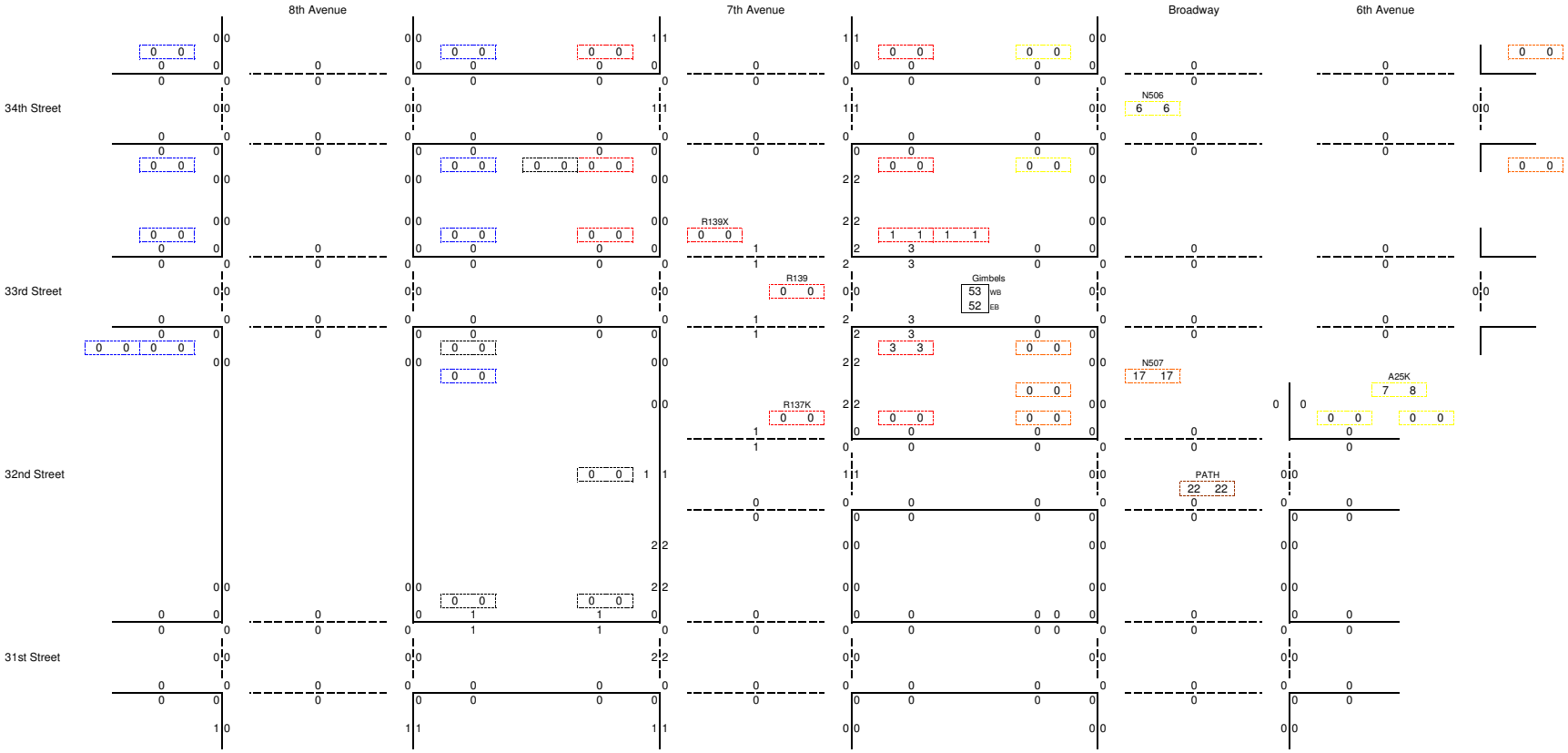

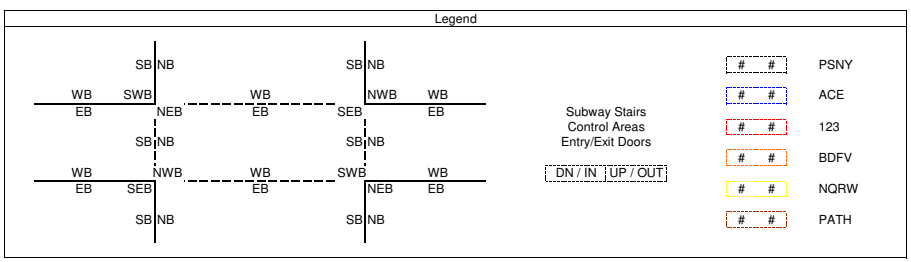

2014 Gimbels Passageway Capture Adjustment
SAT Peak 15 Minutes
32N Total

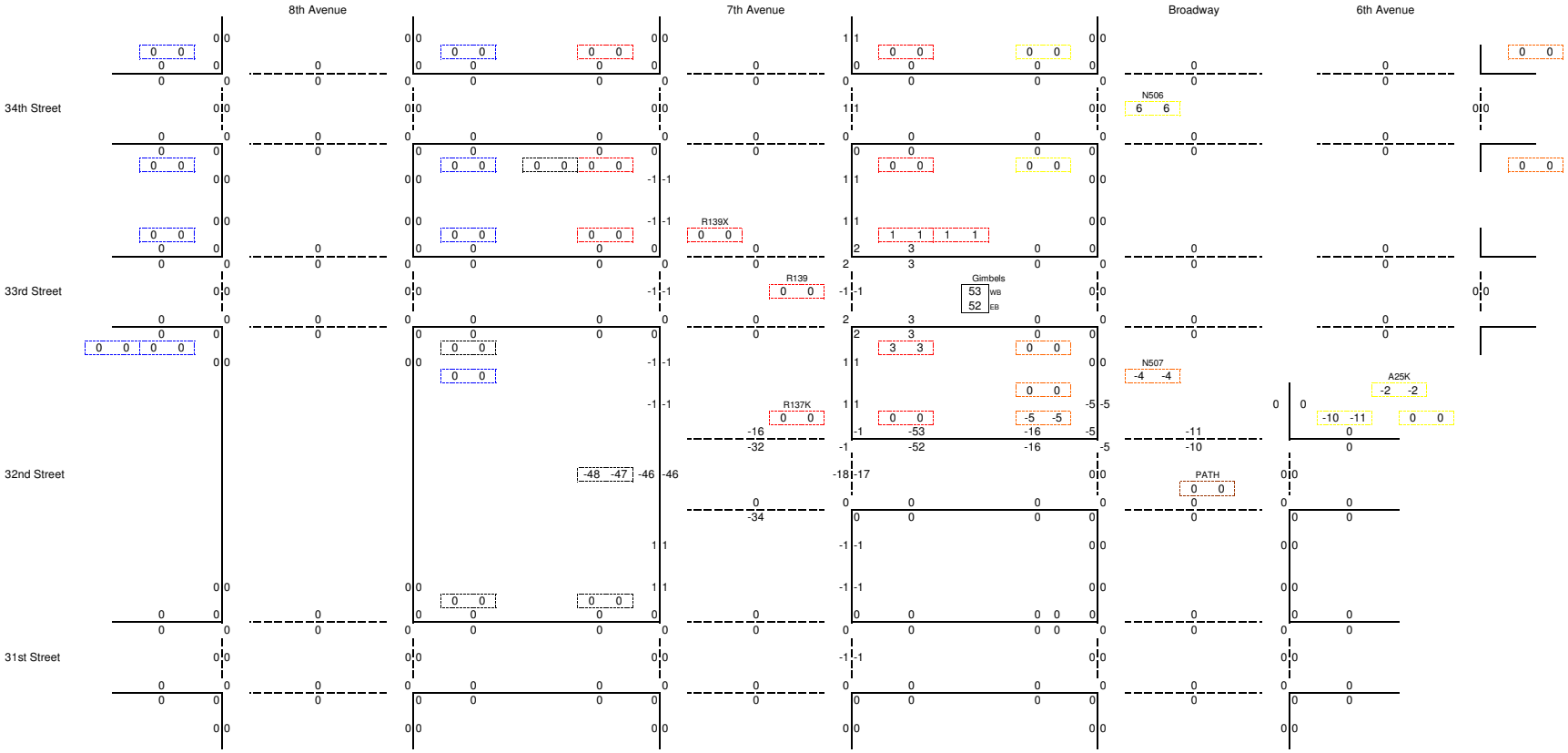

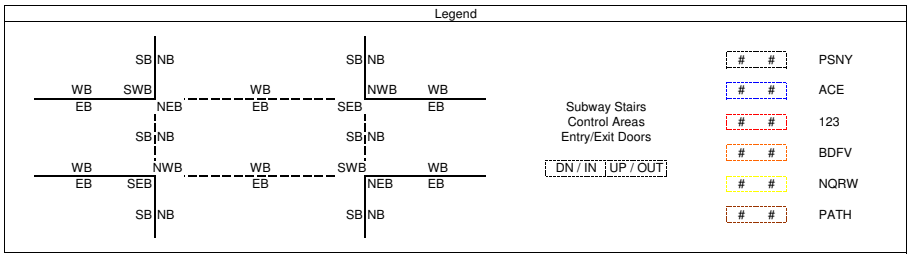

2014 Gimbels Passageway Capture Adjustment
SAT Peak 15 Minutes
32S -# Total

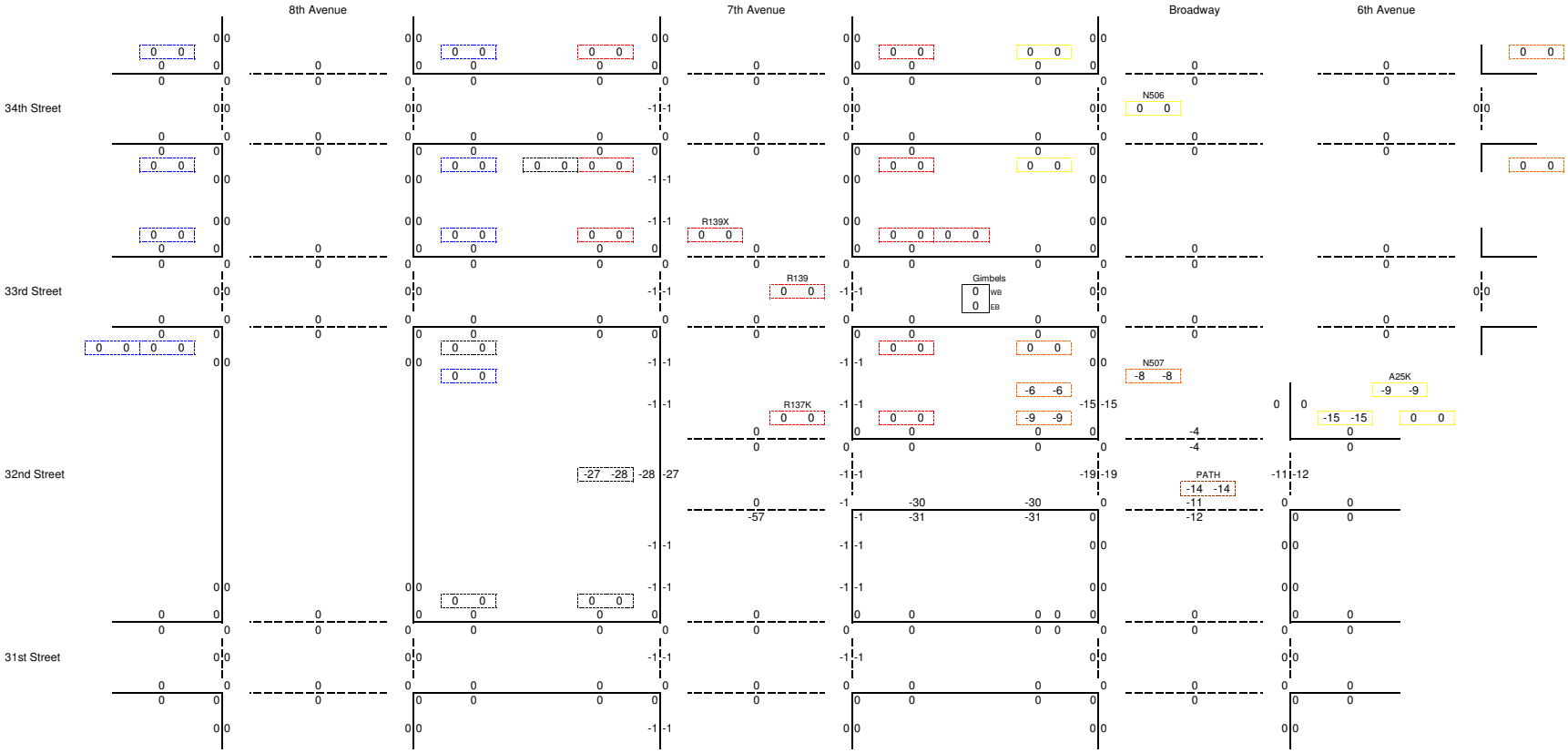

Legend

SB NB
WB SWB
EB
NEB
WB
EB
SB NB
NWB WB
SEB EB
SB NB
WB NWB
EB SEB
SB NB
WB WB
EB EB
SWB WB
NEB EB
SB NB
SB NB

Subway Stairs
Control Areas
Entry/Exit Doors

DN / IN | UP / OUT

PSNY
ACE
123
BDFV
NQRW
PATH

2014 Gimbels Passageway Capture Adjustment
SAT Peak 15 Minutes
32S +# Total

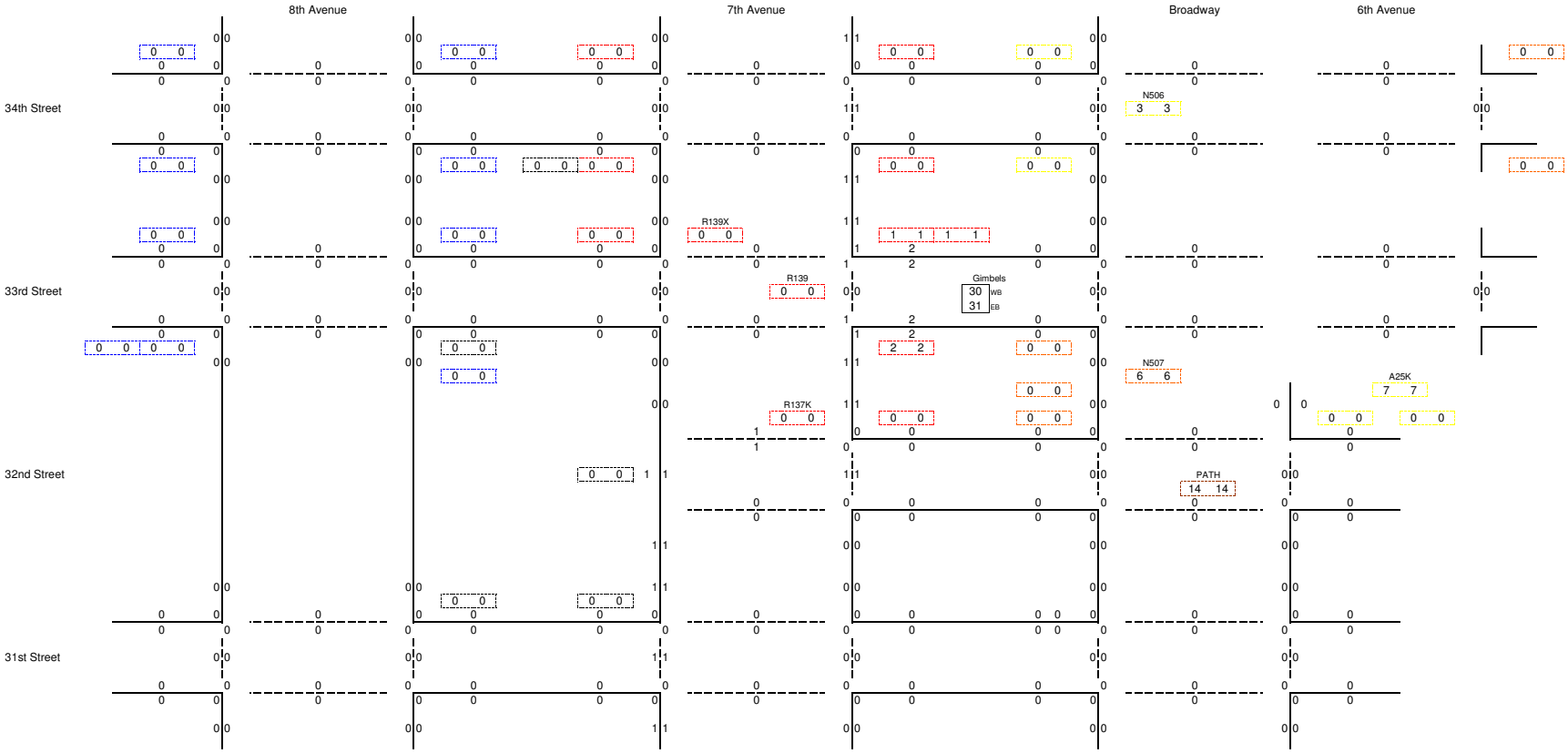

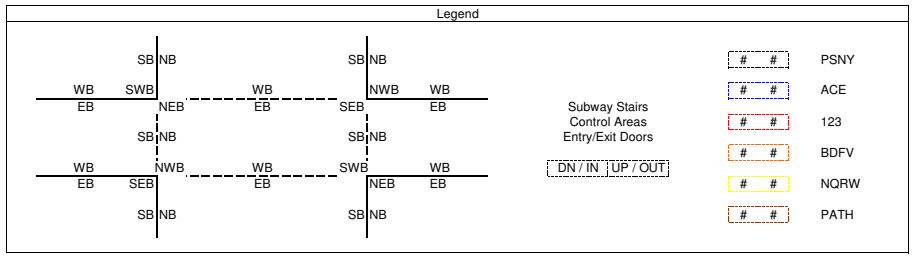

2014 Gimbels Passageway Capture Adjustment
SAT Peak 15 Minutes
32S Total

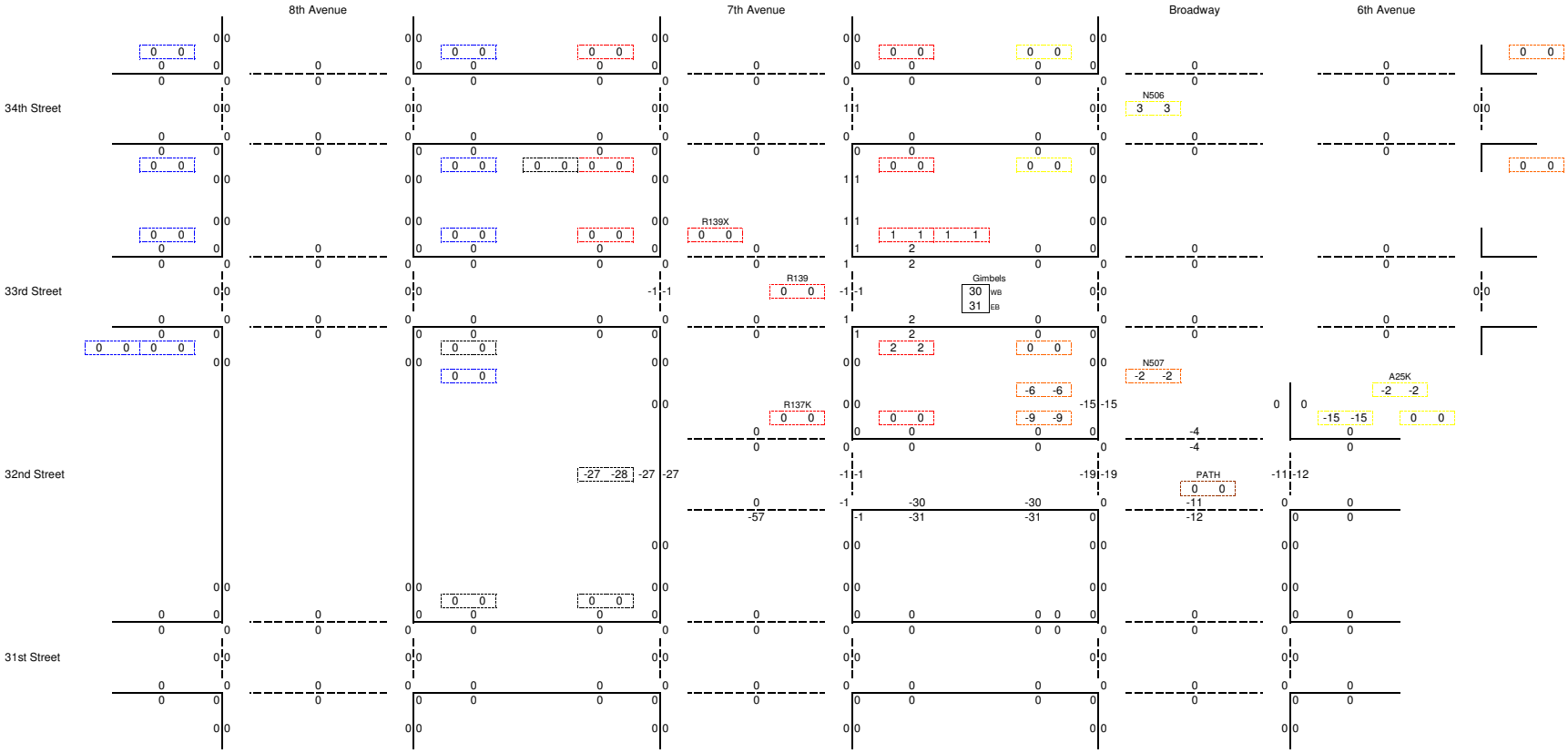

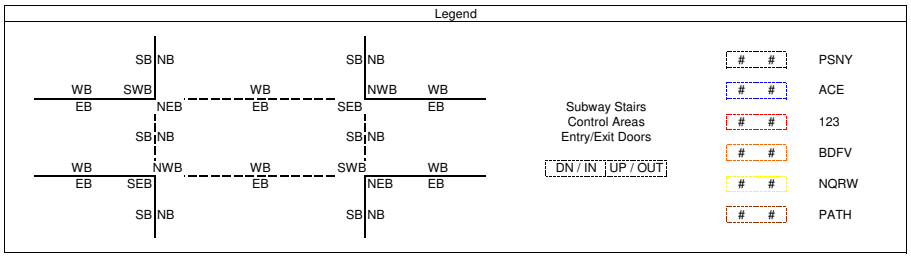

2014 Gimbels Passageway Capture Adjustment
SAT Peak 15 Minutes
Total Adjustment

