Lenox Hill Hospital

Review Session | February 3, 2025



Conceptual rendering (illustrative only)

Project Overview

APPLICANT – Lenox Hill Hospital

REQUESTED ACTIONS

1. **Zoning Map Amendment** to rezone the Lexington Avenue frontage of the development site from an C1-8X to a C1-9 district and the midblock from an R8B to a C1-8 district;

2. **Zoning Text Amendment** to:
    1. Create a new hospital special permit under ZR Section 74-904 to permit a floor area increase of up to 20% for non-profit hospital use, allow such floor area bonus to be used in combination with a ZR Section 66-51 transit bonus, and permit modifications of applicable bulk regulations
    2. Amend ZR Section 66-513(a)(2) to allow a transit floor area bonus, in combination with other floor area bonuses, to exceed 20% of the maximum FAR
    3. Amend ZR Section 92-21 to allow the permitted FAR on a zoning lot partially within the Special Park Improvement District for which a special permit is granted under ZR Section 74-904 to exceed 10 FAR
    4. Establish part of the development site as MIH

3. **ZR 79-904 Special Permit** to facilitate development of a 12.5 FAR hospital;

4. **ZR 66-511 Authorization** for a floor area increase of up to 0.5 FAR in connection with improvements to the southbound platform of the 77th Street station;



Project Context

Block 1461, Lots 13, 21
Lenox Hill, Manhattan
Community District 8



Surrounding Area

Project Information

- 600' Radius
- Development Site
- Area Proposed to be Rezoned

Existing Commercial Overlays & Zoning Districts

C1-1	C2-1	Zoning Districts	
C1-2	C2-2	Special Districts	
C1-3	C2-3		
C1-4	C2-4		
C1-5	C2-5		

Land Uses

- One & Two Family Residential Buildings
- Multi-Family Residential Buildings (Walk-up)
- Multi-Family Residential Buildings (Elevator)
- Mixed Residential & Commercial Buildings
- Commercial/Office Buildings
- Industrial/Manufacturing
- Transportation/Utility
- Public Facilities & Institutions
- Open Space
- Parking Facilities
- Vacant Land
- No Data/Other

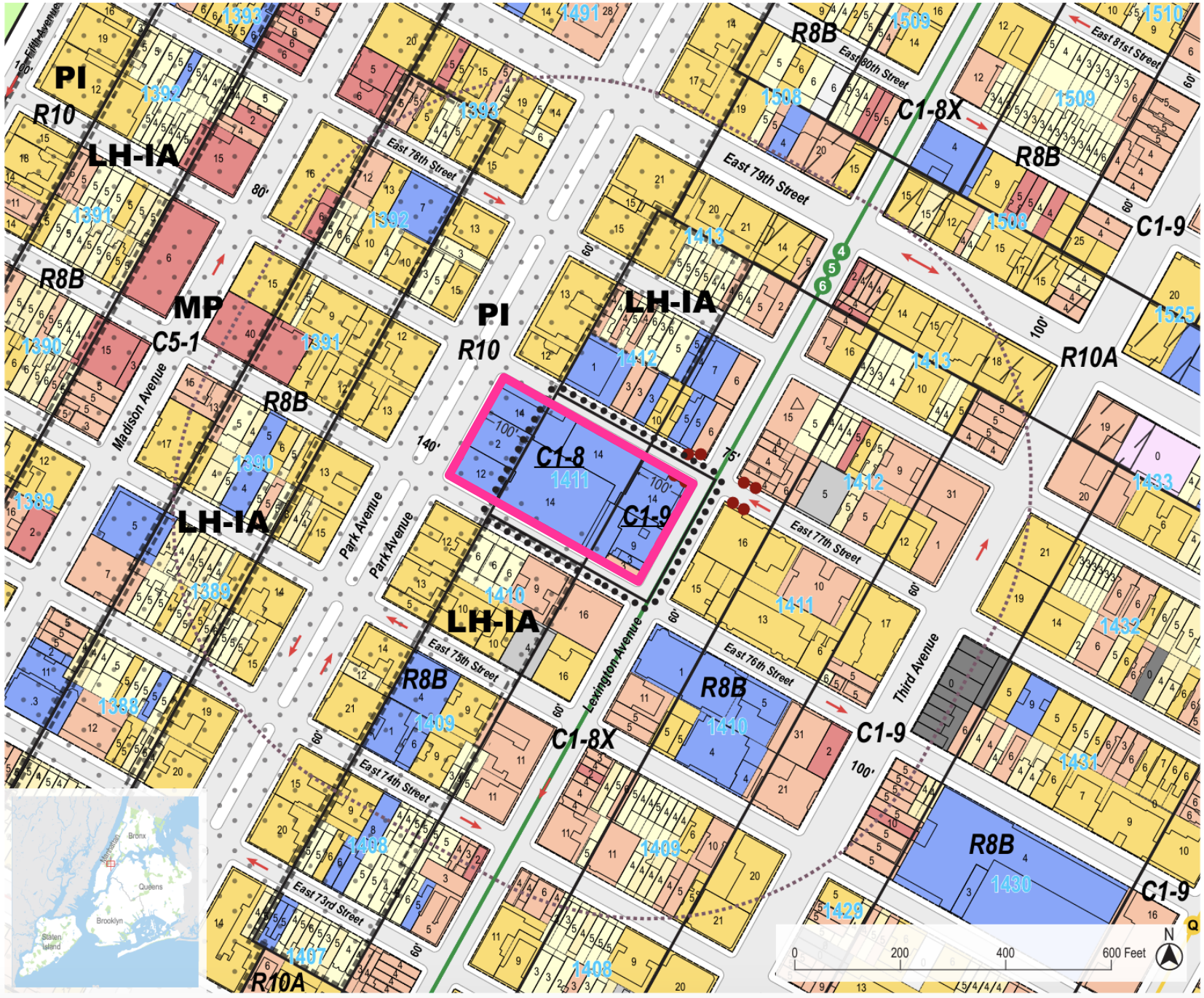

Area Photographs

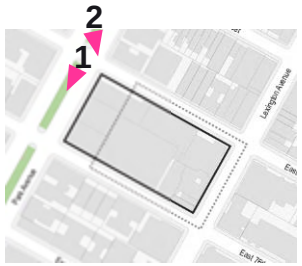



1. View of Park Avenue facing southwest from East 77th Street (Development Site at left)



2. View of the Development Site facing southeast from the intersection of Park Avenue and East 77th Street

Area Photographs

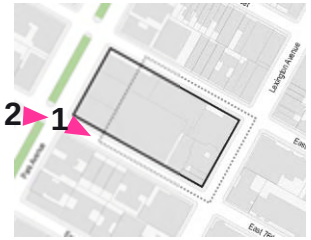



1. View of East 76th Street facing southeast from Park Avenue (Development Site at left)



2. View of the Development Site facing east from the intersection of Park Avenue and East 76th Street

Area Photographs

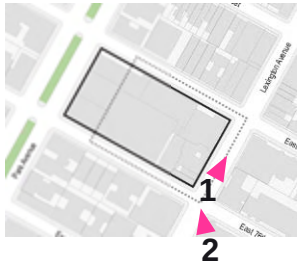



1. View of Lexington Avenue facing northeast from East 76th Street (Development Site at left)



2. View of the Development Site facing northwest from the intersection of Lexington Avenue and East 76th Street

Area Photographs

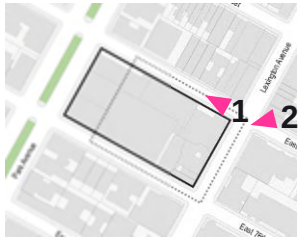



1. View of East 77th Street facing northwest from Lexington Avenue (Development Site at left).



2. View of the Development Site facing west from the intersection of Lexington Avenue and East 77th Street

Area Photographs

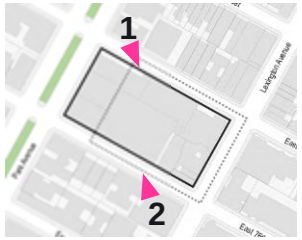



1. View of the Development Site facing southeast from East 77th Street



2. View of the Development Site facing northwest from East 76th Street

Development Site

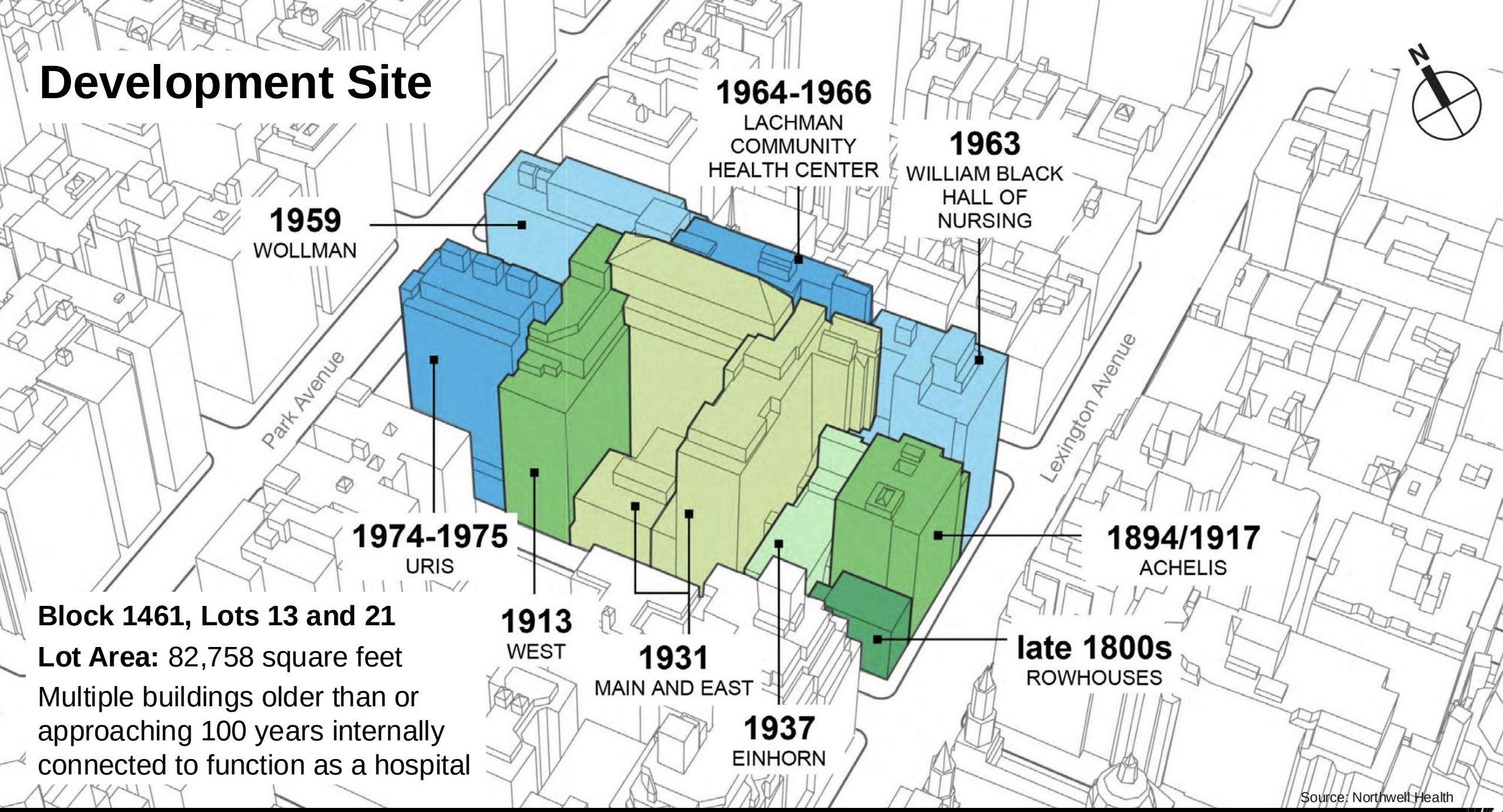

Block 1461, Lots 13 and 21

Lot Area: 82,758 square feet

Multiple buildings older than or approaching 100 years internally connected to function as a hospital

Source: Northwell Health

Development Site



Block 1461, Lots 13 and 21

Lot Area: 82,758 square feet

Multiple buildings older than or approaching 100 years internally connected to function as a hospital

Source: Northwell Health

Development Site





Proposed Project

Hospital Enlargement & Renovation

- 475 Single-bed patient rooms
- State-of-the-art operating rooms
- Right-sized Emergency Department
- Dedicated Mother-Baby Wing

Improved vehicular and pedestrian circulation for patients, staff, visitors, and the community

- Internal ambulance bay
- Expanded loading area

Accessibility at southbound 77th Street subway station (6 train)

- New subway entrance with wider stairs and elevator







Proposed Project

Total hospital floor area: 12.5 FAR
1,034,471 square feet

- **New Building**
  600,662 square feet
- **Existing/Renovated Buildings**
  433,809 square feet

An enlargement of approximately 414,000 square feet, about 5.0 FAR

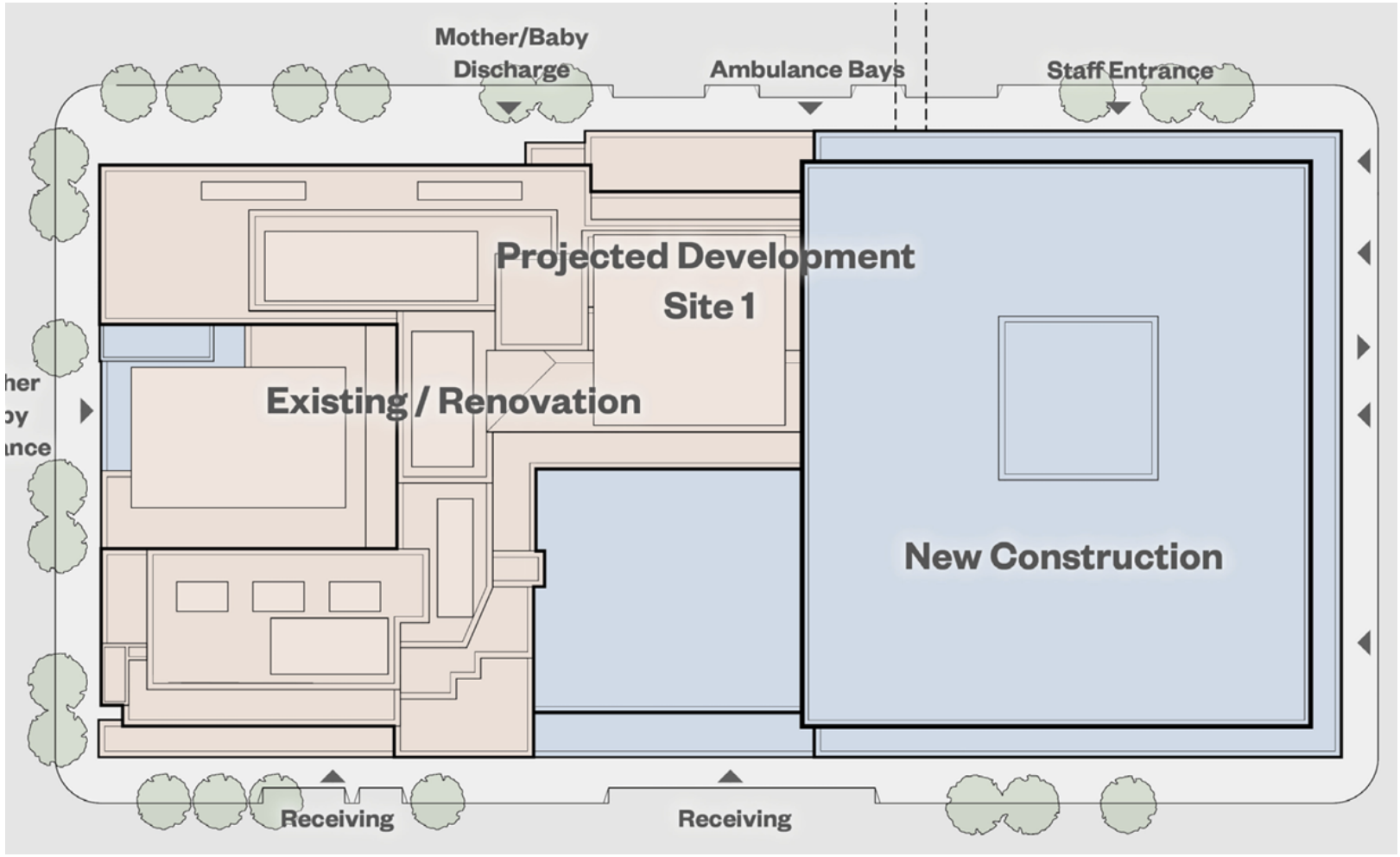

Ground Floor Plan

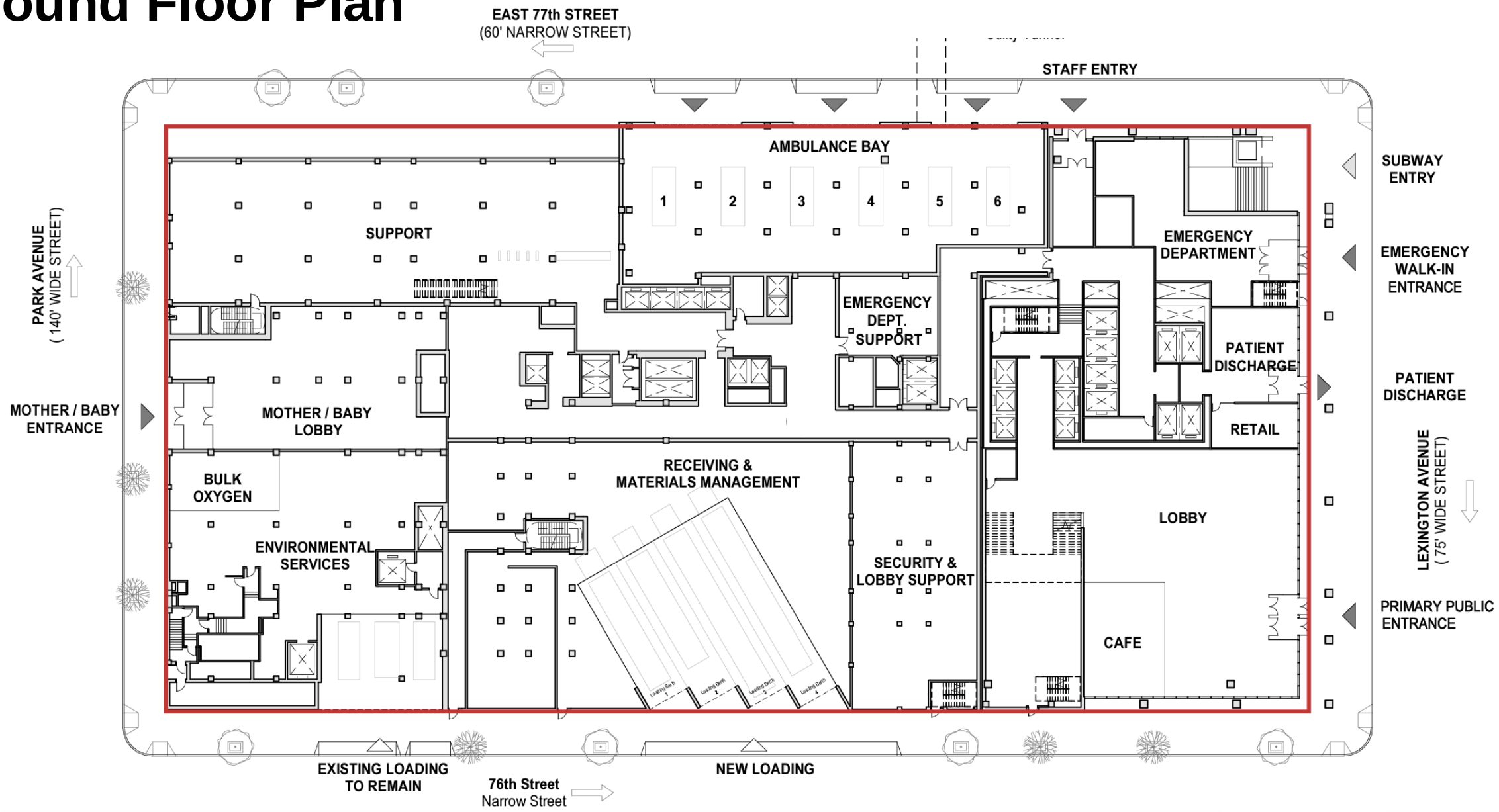

Ground Floor Plan

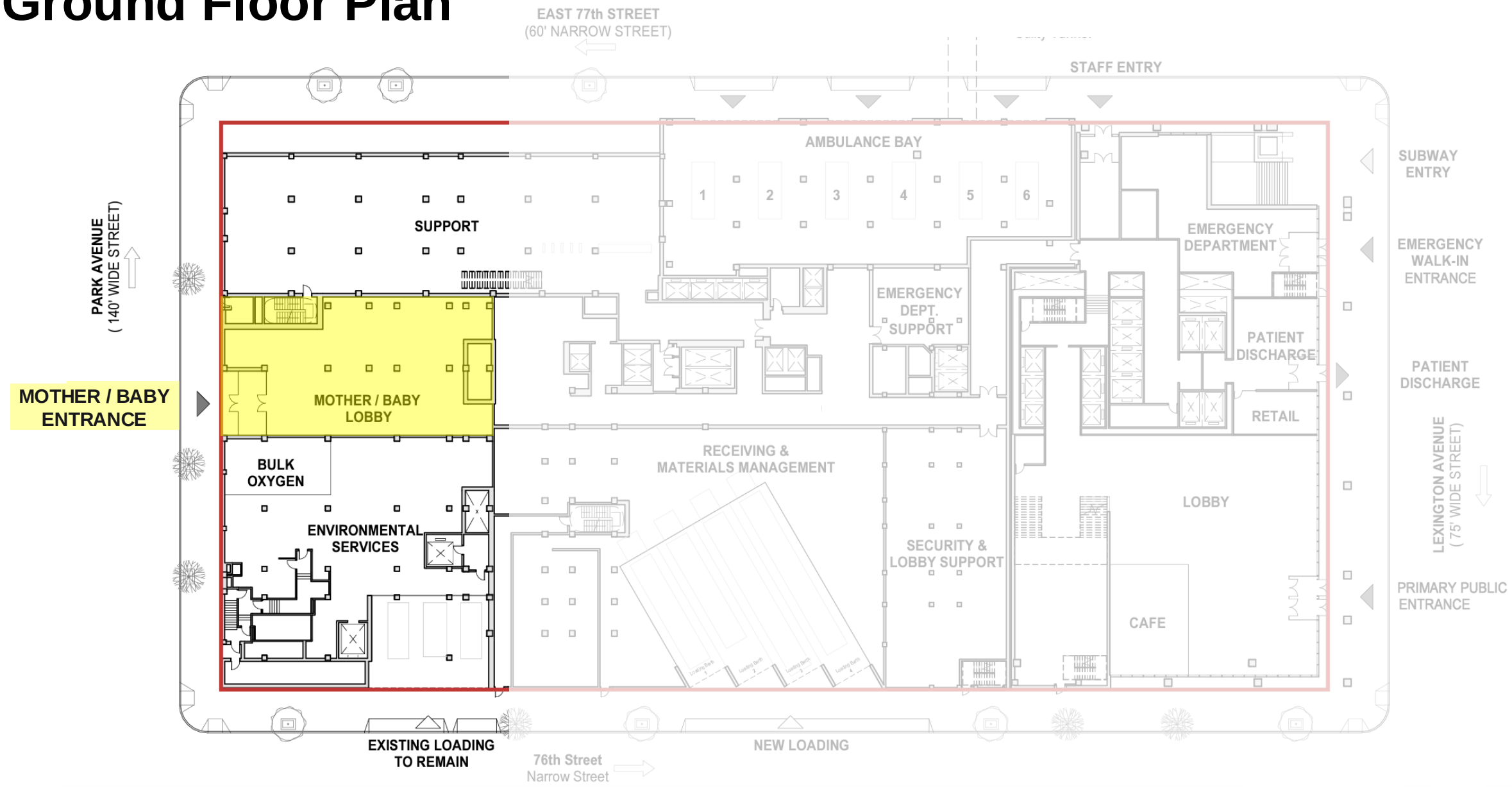

Ground Floor Plan

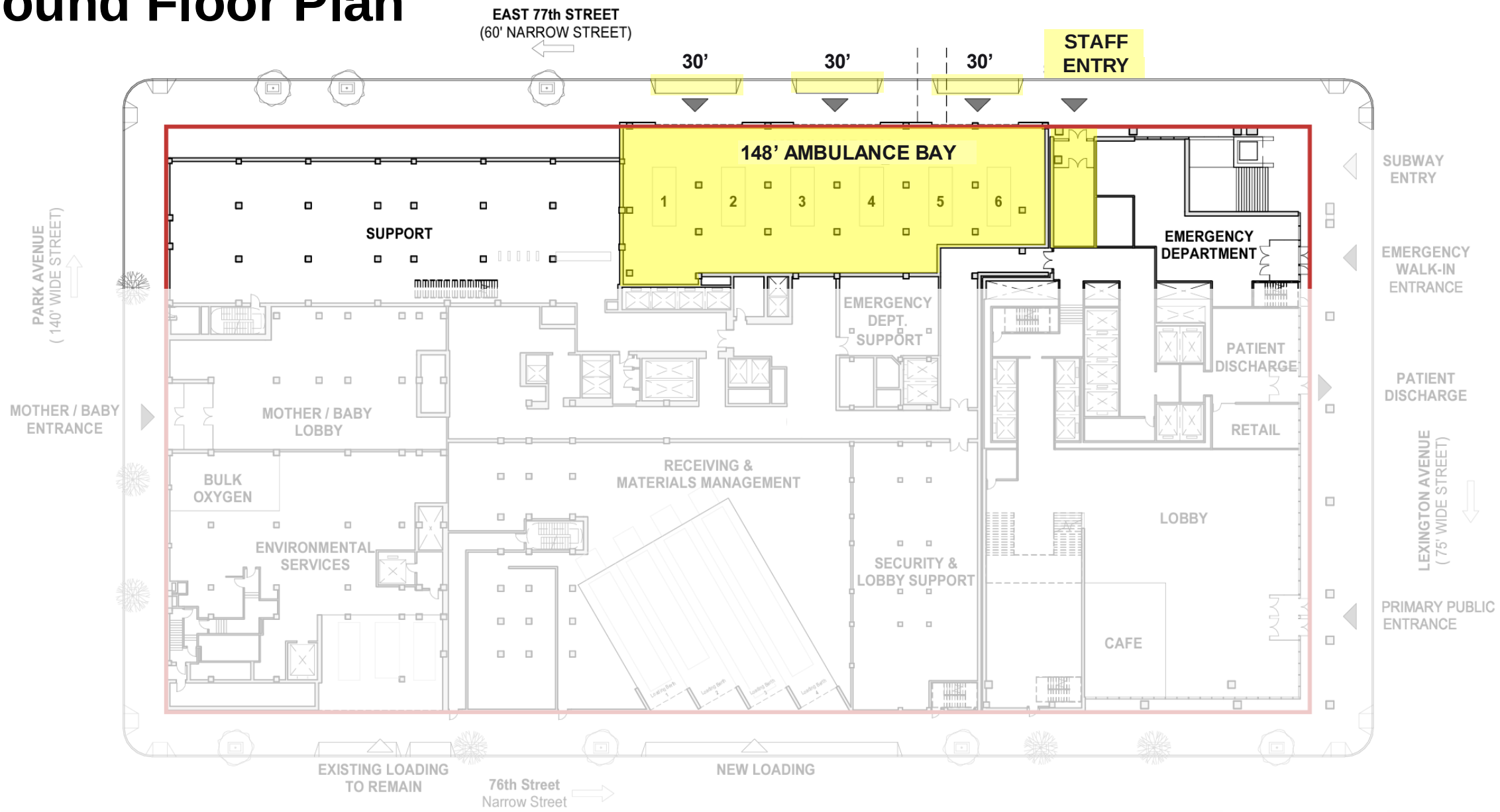

Ground Floor Plan

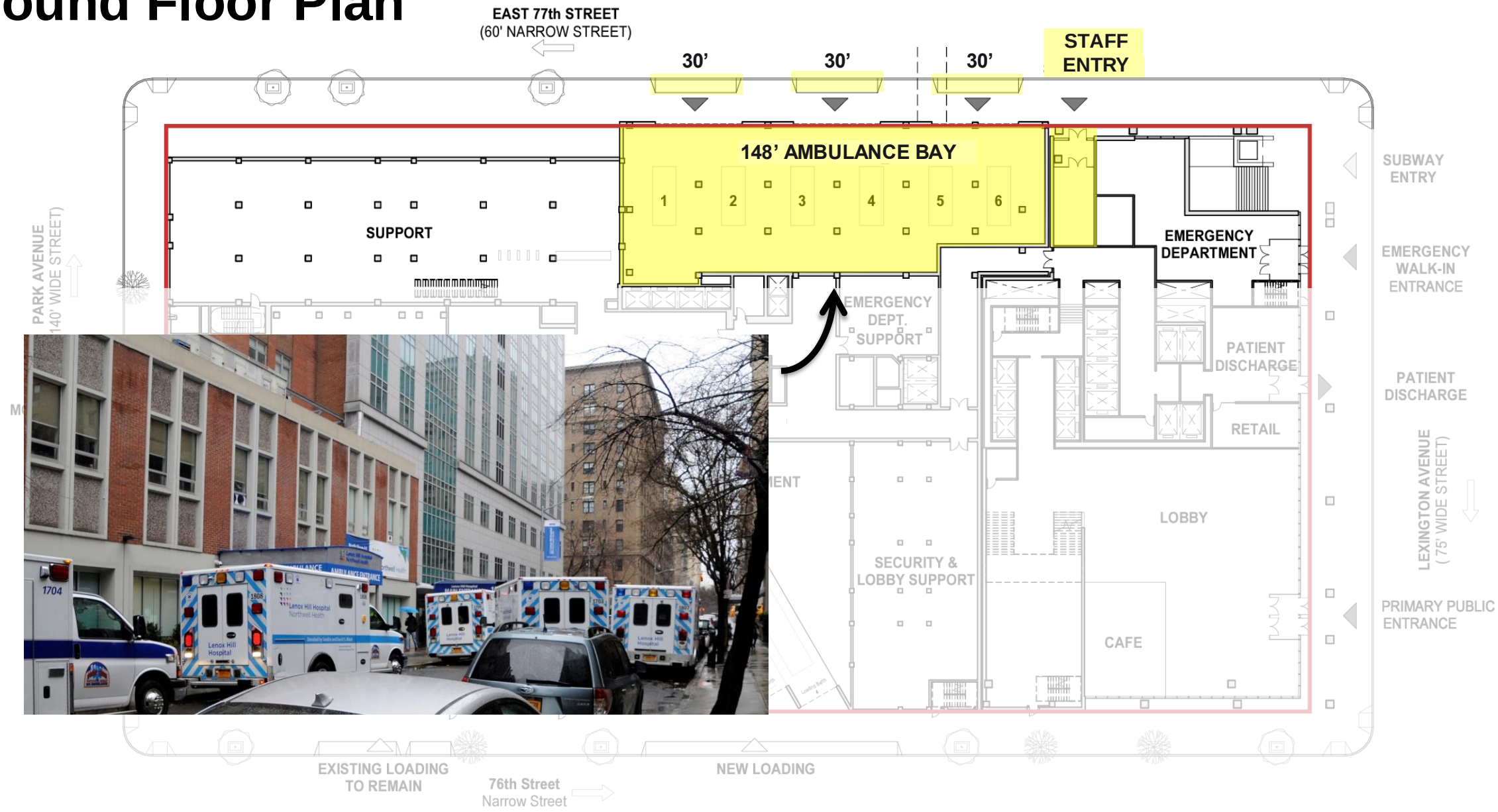

Ground Floor Plan

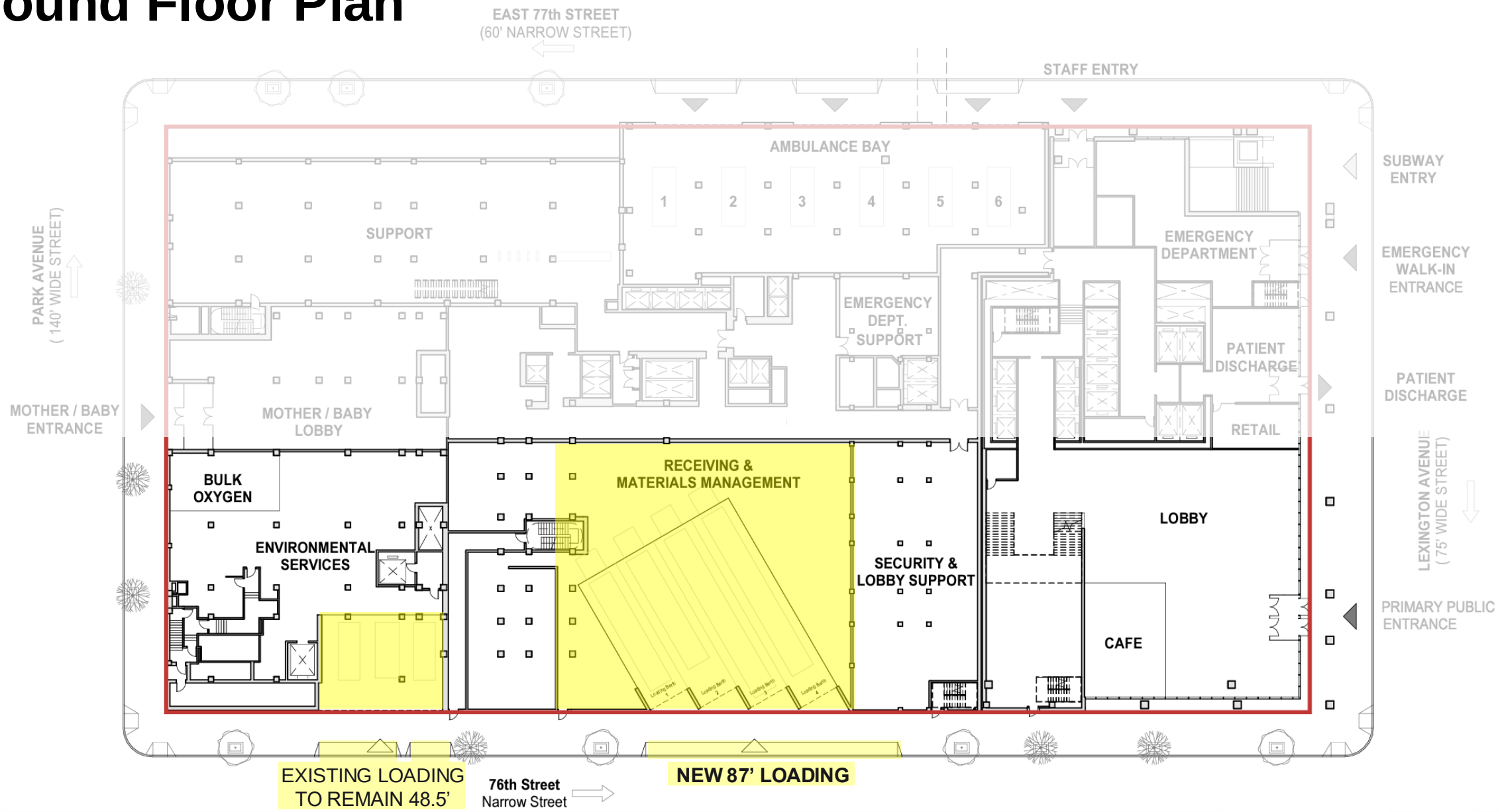

Ground Floor Plan



Ground Floor Plan

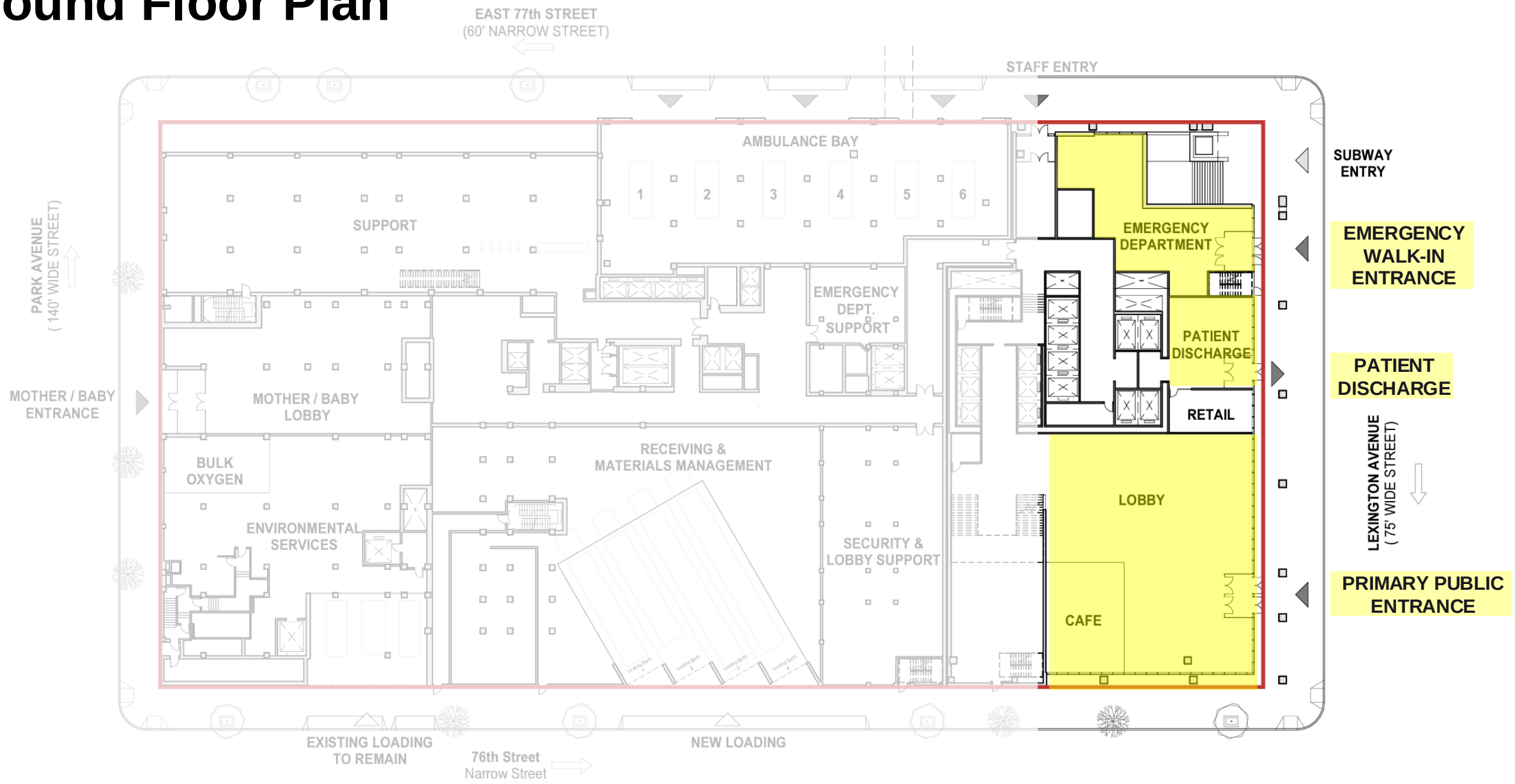

Ground Floor Plan

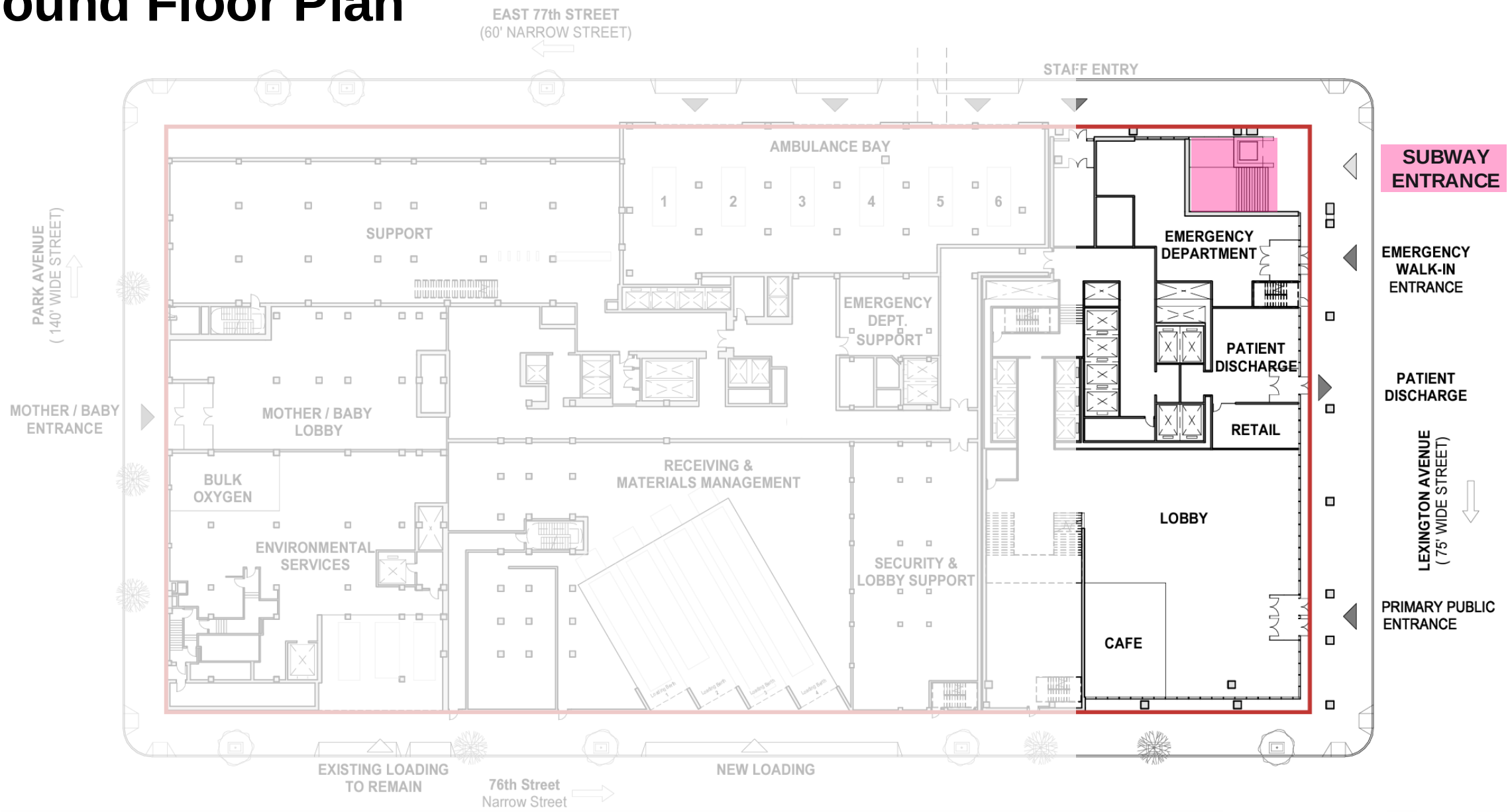

Ground Floor Plan



EAST
(60' NA

STAFF ENTRY

PARK AVENUE
(140' WIDE STREET)

MOTHER / BABY
ENTRANCE

SUPPORT

MOTHER / BABY
LOBBY

BULK
OXYGEN

ENVIRONMENTAL
SERVICES

EMERGENCY
DEPARTMENT

PATIENT
DISCHARGE

RETAIL

LOBBY

CAFE

SUBWAY
ENTRANCE

EMERGENCY
WALK-IN
ENTRANCE

PATIENT
DISCHARGE

LEXINGTON AVENUE
(75' WIDE STREET)

PRIMARY PUBLIC
ENTRANCE

EXISTING LOADING
TO REMAIN

76th Street
Narrow Street

NEW LOADING

Subway Entrance



Lexington Ave



Proposed Building Envelopes

436’
26 stories

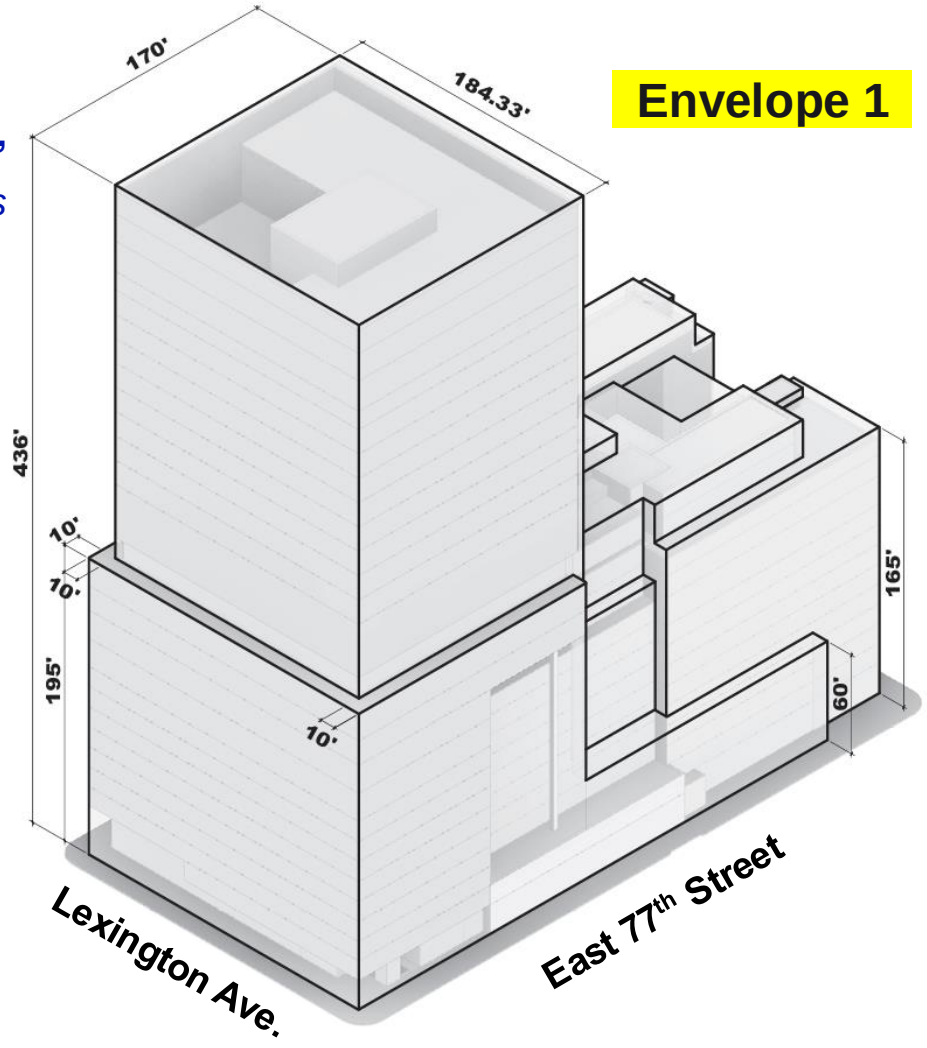

395’
21 stories

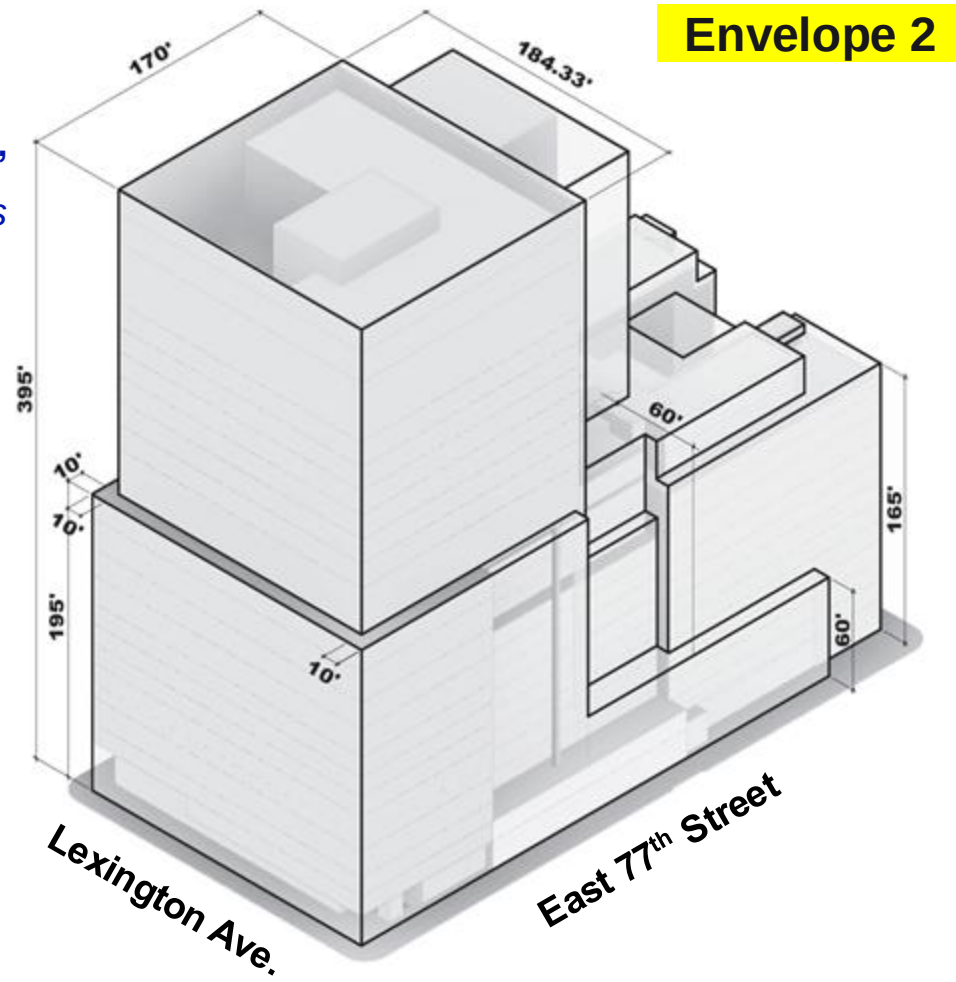

Building Envelope 1

Lexington Ave – up to 436 feet

Midblock – up to 210 feet

Park Ave – up to 165 feet

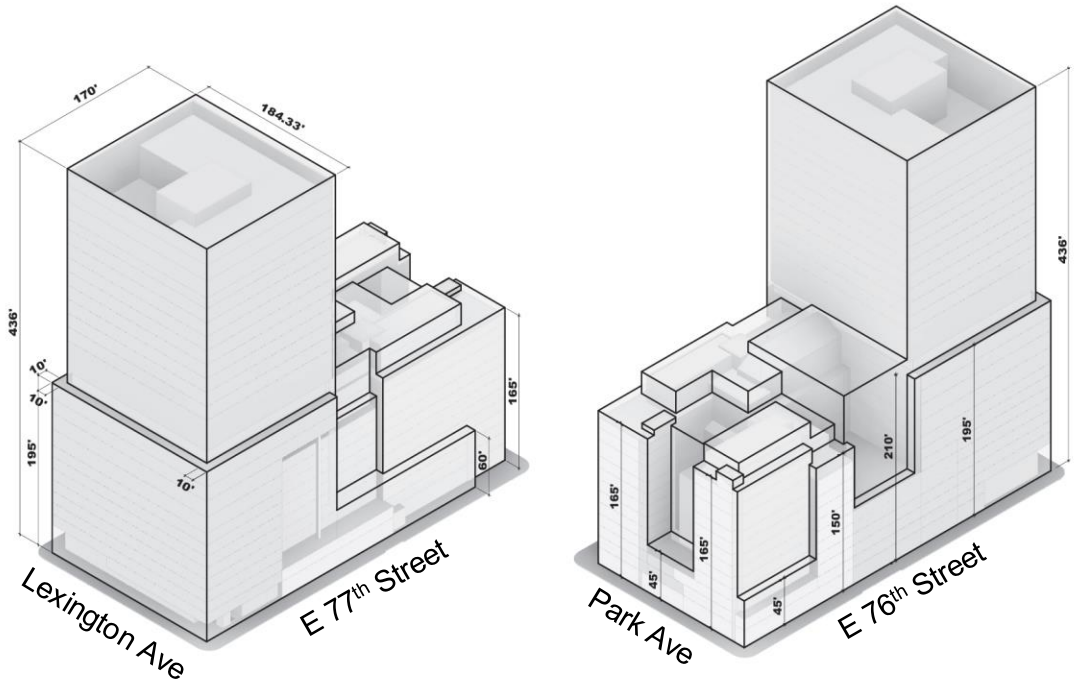



Building Envelope 2

Lexington Ave – up to 395 feet

Midblock – up to 360 feet

Park Ave – up to 165 feet

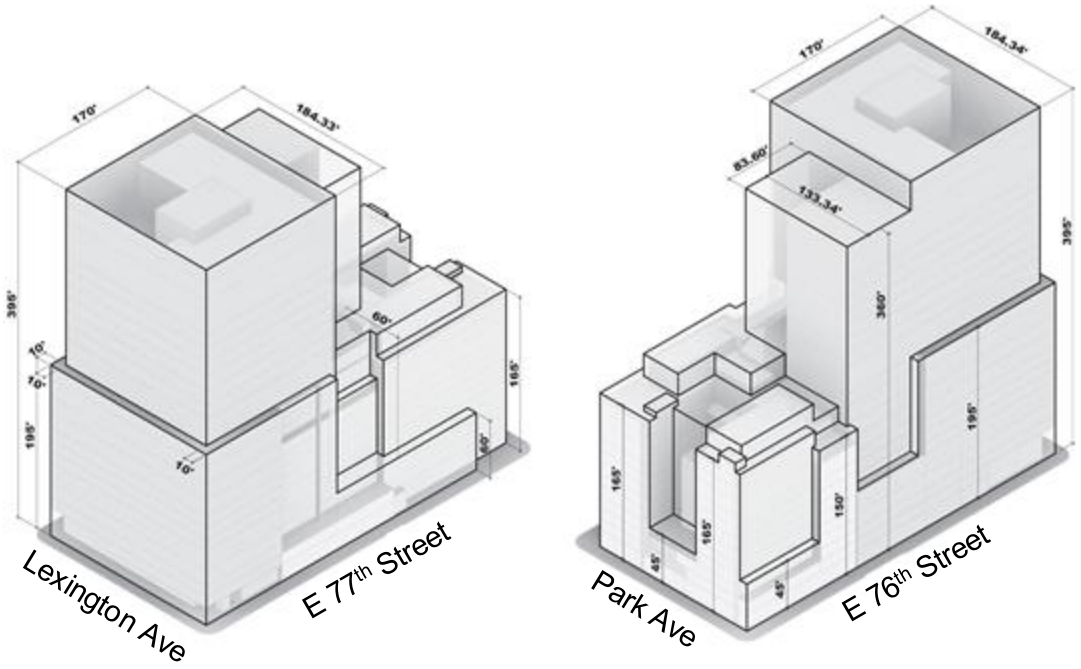





Envelope 1

Lexington Ave. View

Illustrative Only



Envelope 2

Lexington Ave. View

Illustrative Only



Envelope 1

East 76th Street View

Illustrative Only



Envelope 2

East 76th Street View

Illustrative Only

Neighborhood Character Diagram – Lexington Avenue

Envelope 1

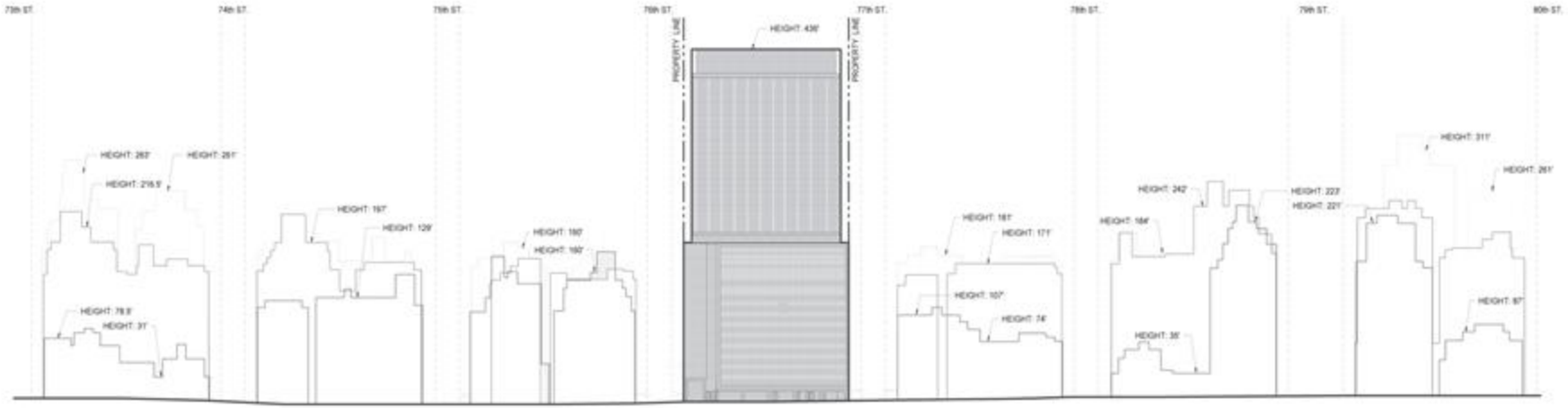

Envelope 2



Neighborhood Character Diagram – East 76th Street

Envelope 1

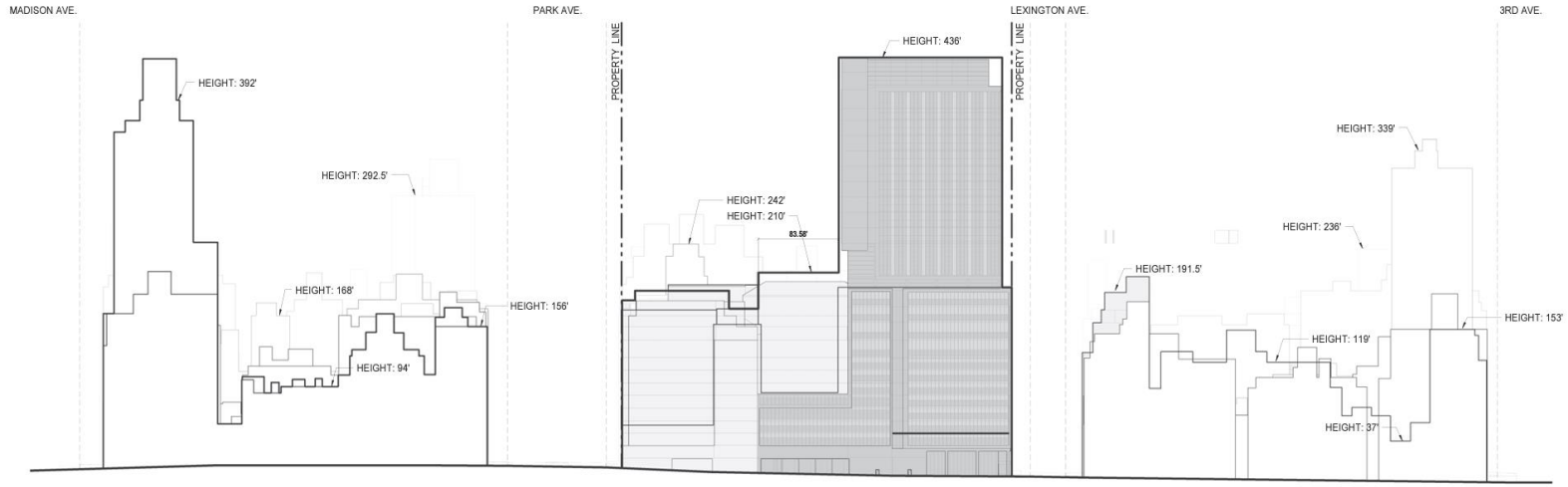

Envelope 2

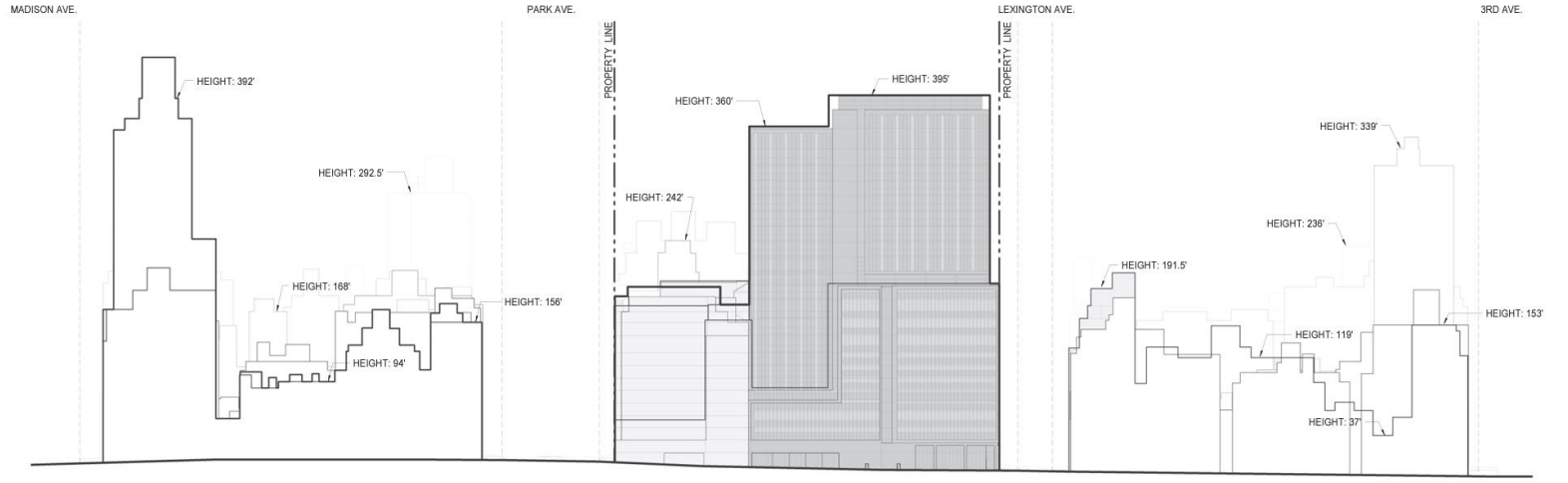

Neighborhood Character Diagram – Park Avenue

Envelope 1

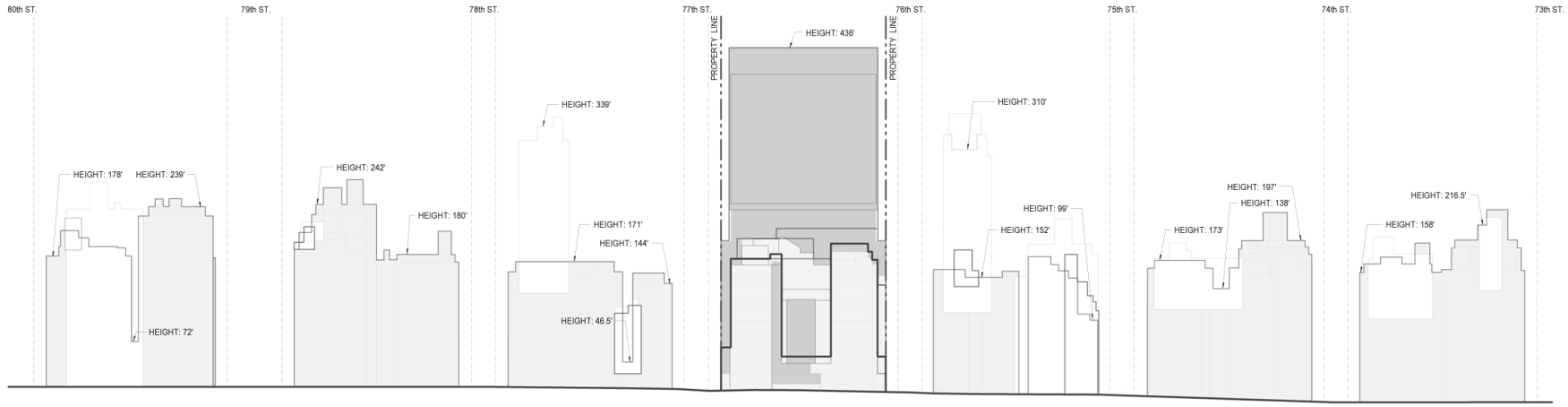

Envelope 2

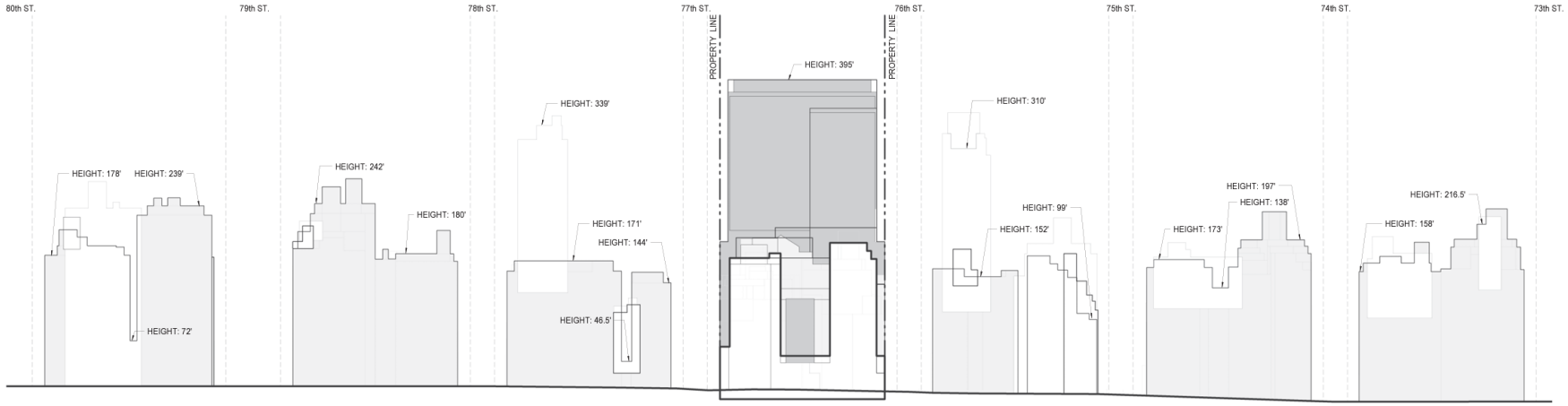

Neighborhood Character Diagram – East 77th Street

Envelope 1

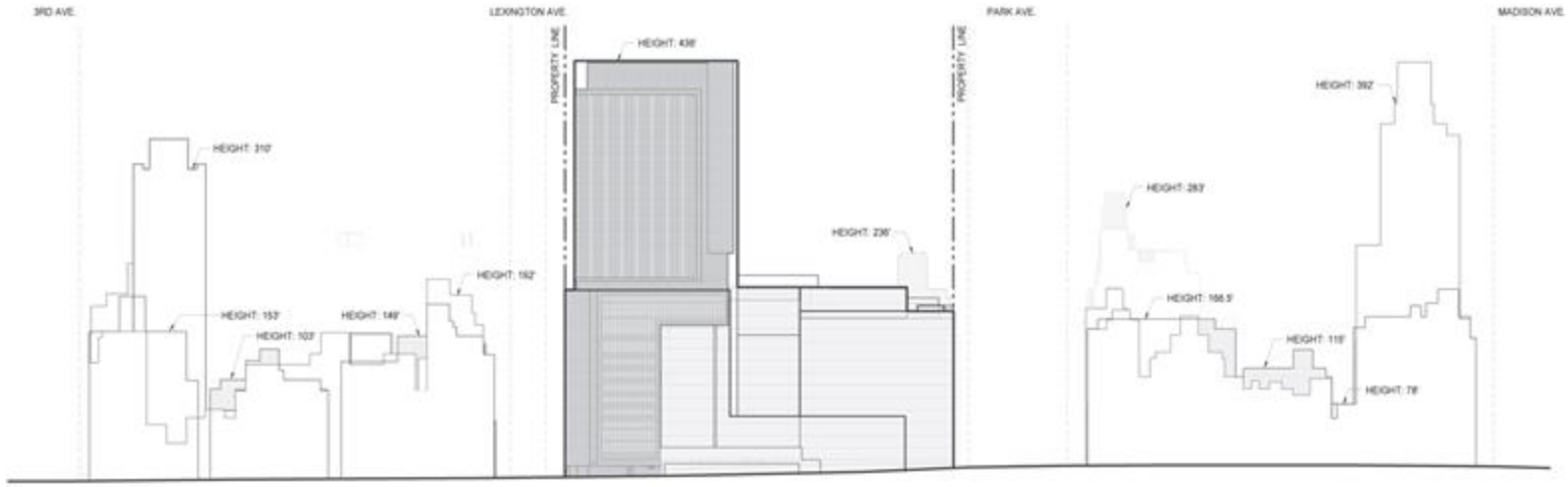

Envelope 2



Requested Actions

1. **Zoning Map Amendment** to rezone the Lexington Avenue frontage of the development site from an C1-8X to a C1-9 district and the midblock from an R8B to a C1-8 district;

2. **Zoning Text Amendment** to:
    1. Create a new special permit under ZR Section 74-904 to permit a floor area increase of up to 20% for hospital use, allow such floor area bonus to be used in combination with a ZR Section 66-51 transit bonus, and permit modifications of applicable bulk regulations
    2. Amend ZR Section 66-513(a)(2) to allow a transit floor area bonus, in combination with other floor area bonuses, to exceed 20% of the maximum FAR
    3. Amend ZR Section 92-21 to allow the permitted FAR on a zoning lot partially within the Special Park Improvement District for which a special permit is granted under ZR Section 74-904 to exceed 10 FAR
    4. Establish part of the development site as MIH

3. **ZR 79-904 Special Permit** to facilitate development of a 12.5 FAR hospital;

4. **ZR 66-511 Authorization** for a floor area increase of up to 0.5 FAR in connection with improvements to the southbound platform of the 77th Street station.





Zoning Map Amendment

- **Rezone the midblock from R8B to C1-8**
  - R8B – 5.1 FAR Community Facility Use
  - C1-8 – 10.0 FAR Community Facility Use

- **Rezone 100’ along Lexington Avenue from C1-8X to C1-9**
  - C1-8X – 9.0 FAR Community Facility Use
  - C1-9 – 10.0 FAR Community Facility Use

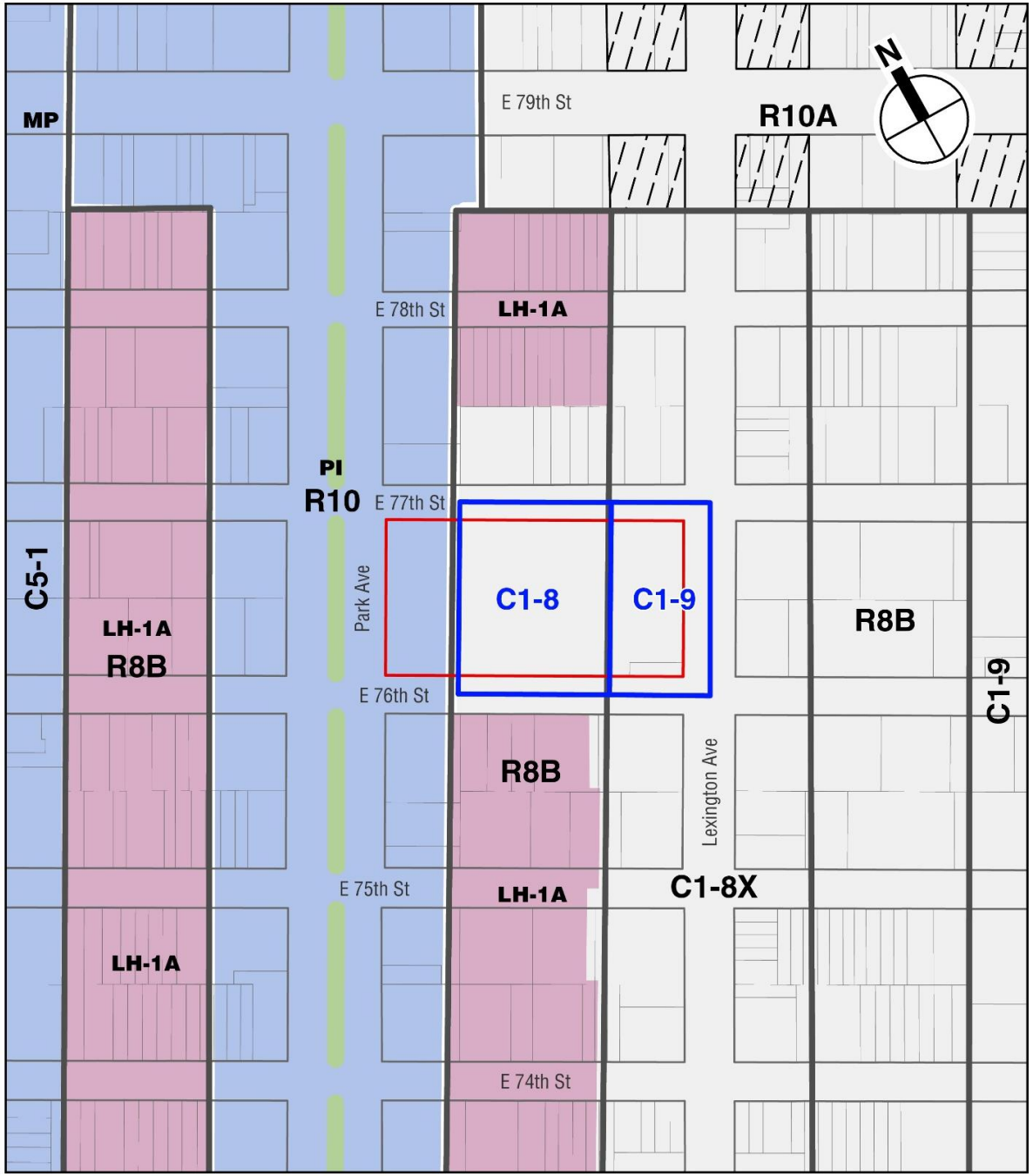

Hospital Block

Zoning District Boundaries

C1-5 Commercial Overlay District

Park Avenue Malls

Limited Height District (LH-1A)

Special Park Improvement District (PI)

Special Madison Avenue Preservation District (MP)

Proposed Zoning

Zoning Text Amendment

1. **Amendment to Article VII, Chapter 4** to create a new special permit (ZR Section 74-904) to allow a 20% floor area bonus and modification of bulk regulations to facilitate the enlargement of non-profit hospitals where the existing facilities occupy a full block that is located in R9, R10 or equivalent Commercial Districts and partially within the Special Park Improvement District.

2. **Amendment to ZR Section 66-513** to allow the new hospital special permit to be used in conjunction with a transit improvement bonus.

3. **Amendment to ZR Section 92-21** to allow the permitted FAR on a zoning lot partially within the Special Park Improvement District for which a special permit is granted under ZR Section 74-904 to exceed 10.0 FAR provided the amount of floor area within the Special Park Improvement District would not exceed 10.0 FAR.

4. **Amendment to ZR Appendix F** to map a Mandatory Inclusionary Housing Area - Option 1 and 2 over the rezoning area.

Hospital Special Permit (ZR 74-904)

- Allow a 20% (2.0 FAR) floor area bonus for the hospital.
- Allow the project to incorporate 0.5 FAR of additional transit bonus requested through an authorization.
- Allow modification of height and setback and other bulk controls.
- Establish a maximum envelope for development on the zoning lot.

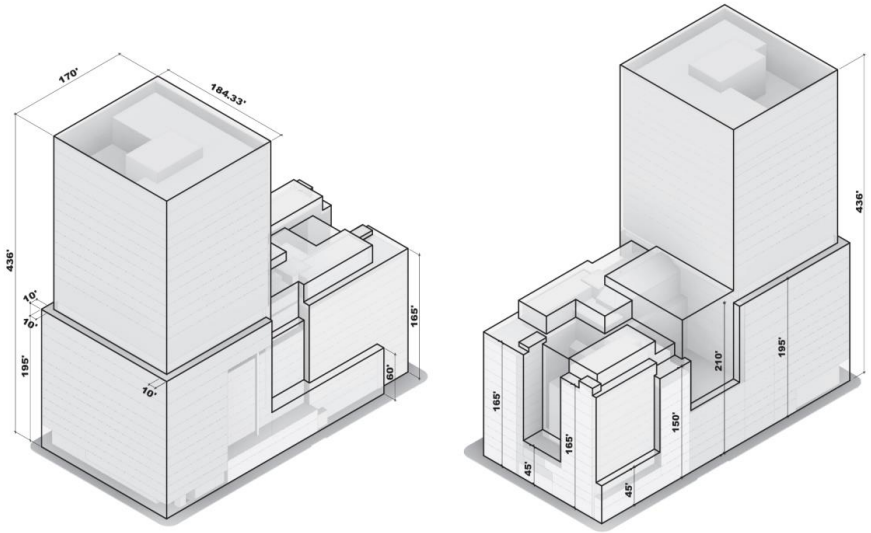

Envelope 1

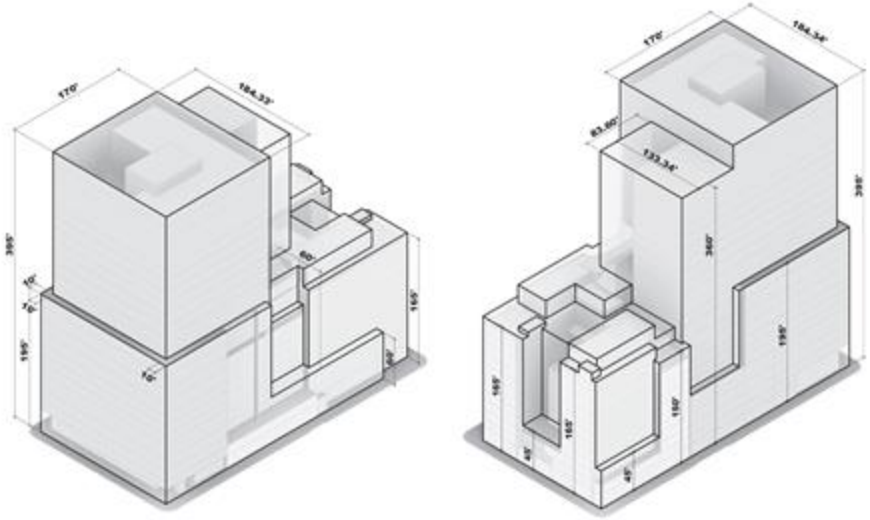

Envelope 2

Hospital Special Permit – Conditions and Findings

Conditions of the Special Permit:

1. At least 75% of the floor area on such zoning lot must be allocated for hospital use.
2. The bonus floor area granted by the permit must only be used for hospital use.
3. The amount of floor area to be located on the portion of the lot within the Special Park Improvement District shall not exceed 10.0 FAR

Findings of the Special Permit:

1. The public benefit derived from such proposed hospital development merits the additional floor area.
2. Where bulk modifications are requested, such modifications provide a more satisfactory physical relationship to existing hospital buildings on the zoning lot for a more efficient and integrated site plan.
3. The distribution of bulk will result in a satisfactory site plan and urban design relationships of buildings to adjacent streets and surrounding area.

The Commission may prescribe appropriate conditions and safeguards to minimize adverse effects on the character of the surrounding area.

ZR 74-904 Special Permit

<u>Requested waivers to facilitate new building on the eastern portion along Lexington Avenue and portions of the exiting buildings on the midblock.</u>

- **Maximum Front Wall Height**
- **Minimum Required Setback**
- **Sky Exposure Plane**

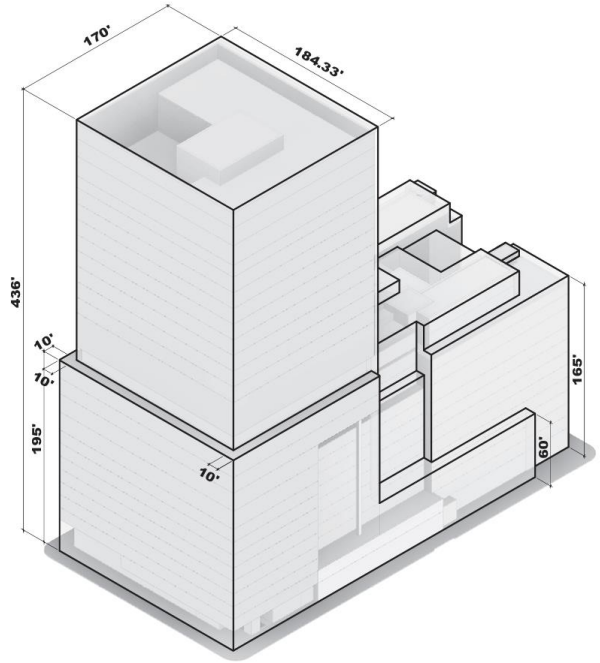

Envelope 1

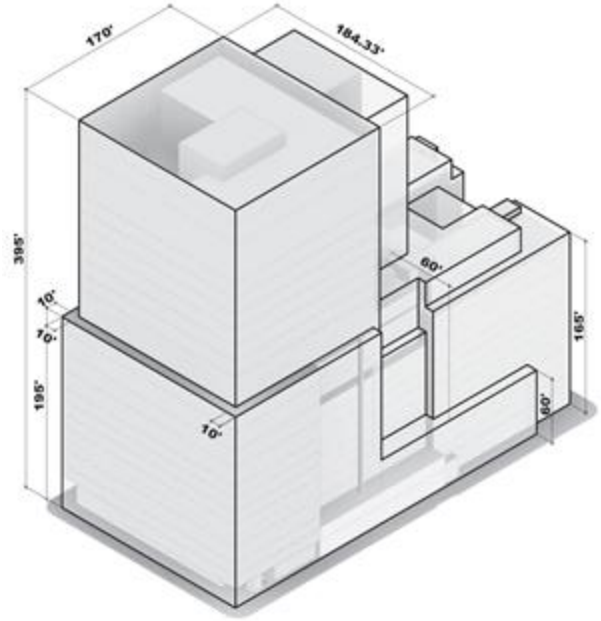

Envelope 2

ZR 74-904 Special Permit

- **Maximum Front Wall Height –** 85’ required where up to 195’ is proposed under both envelopes

Envelope 1

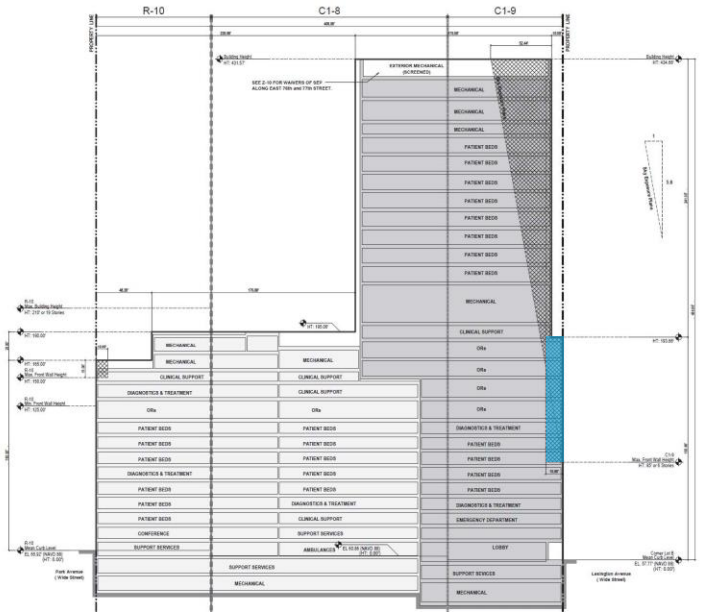

Waiver Area on Lexington Ave.

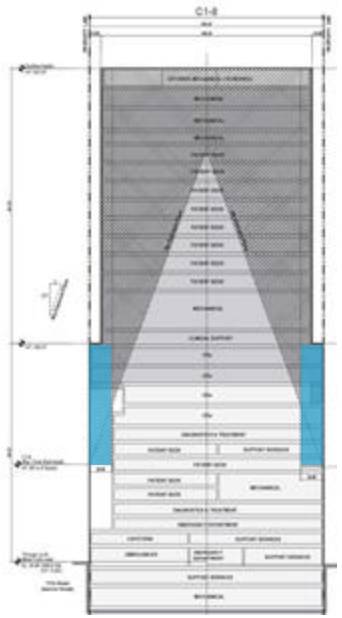

Waiver Areas on Side Streets

Envelope 2

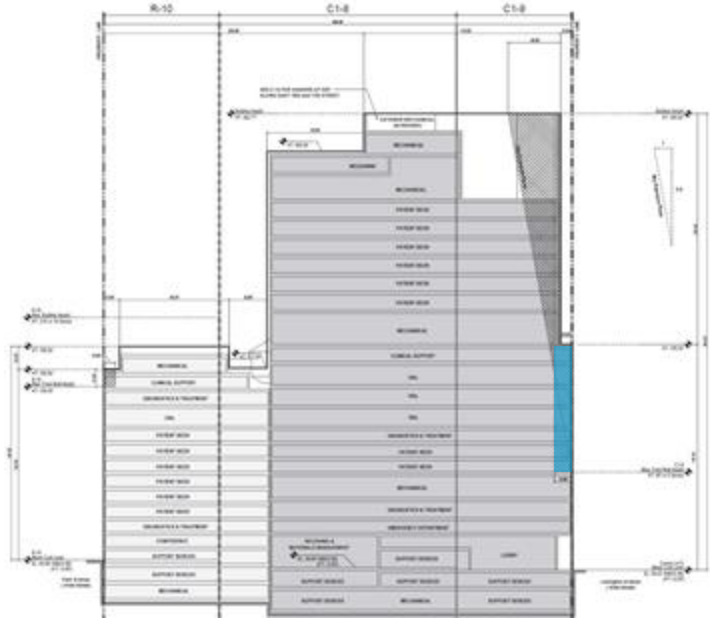

Waiver Area on Lexington Ave.

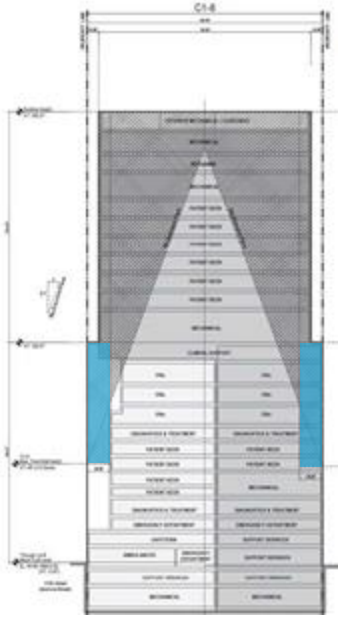

Waiver Areas on Side Streets

Parts of the proposed building that exceed the maximum front wall height

ZR 74-904 Special Permit

- **Minimum Required Setback –** 15’ to 20’ required where 9.4’ to 10’ is proposed under both envelopes
- **Sky Exposure Plane –** maximum height of 436’ is proposed under Envelope 1 and 395’ is proposed under Envelope 2

Envelope 1

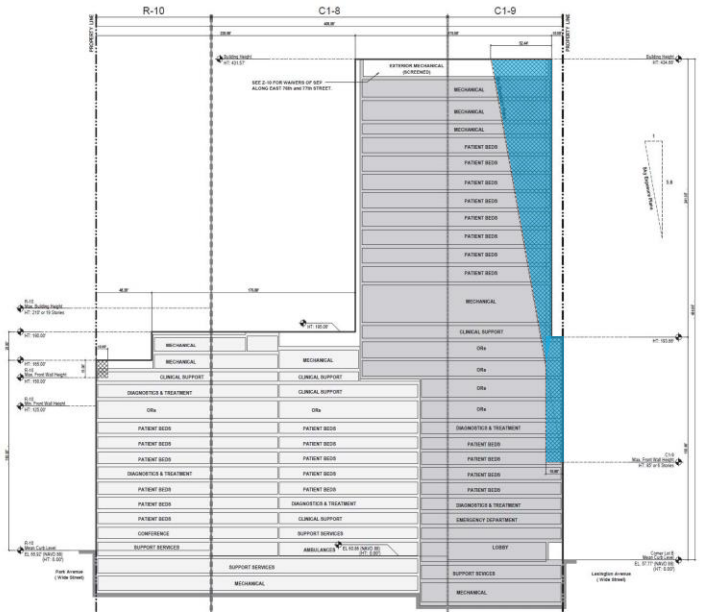

Waiver Area on Lexington Ave.

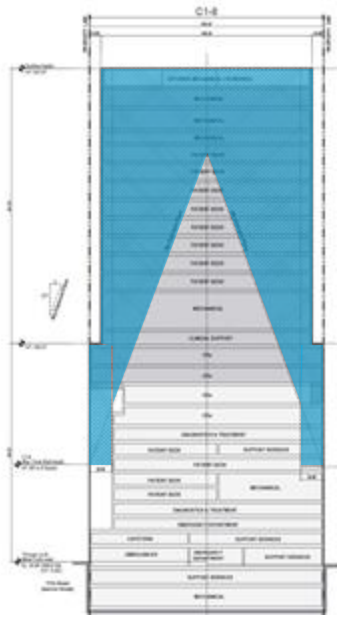

Waiver Areas on Side Streets

Envelope 2

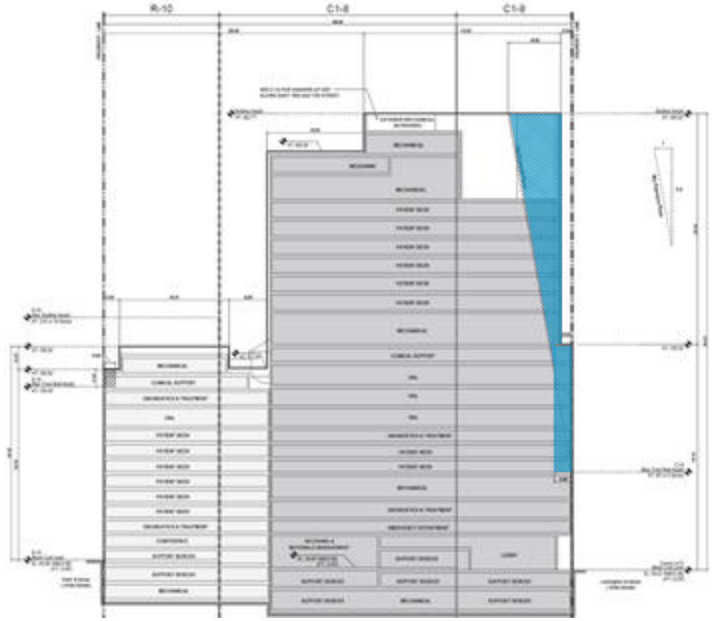

Waiver Area on Lexington Ave.

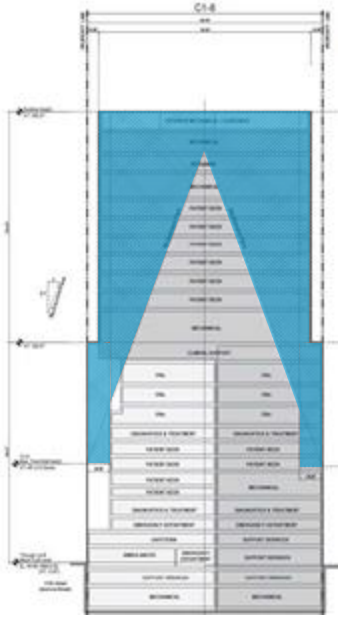

Waiver Areas on Side Streets

Parts of the proposed building that exceed the height and setback regulations

ZR 74-904 Special Permit

<u>Requested waivers to facilitate existing buildings on the western portion along Park Avenue.</u>

- **Maximum Front Wall Height –** to permit certain portions of the existing buildings previously approved by BSA variance to rise to a height of up to 175 feet and a stair tower addition to rise to 165 feet along Park Avenue.
- **Minimum Required Front Wall Height and Location**
- **Maximum Lot Coverage**

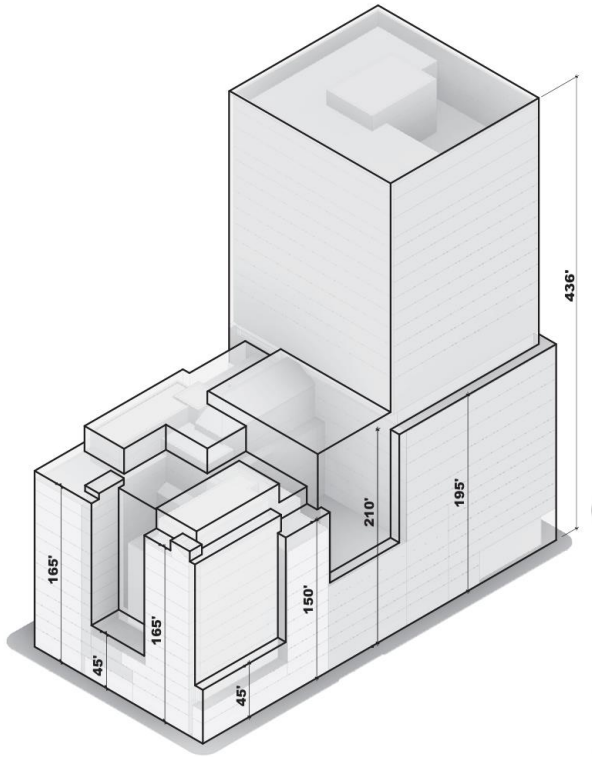

Envelope 1

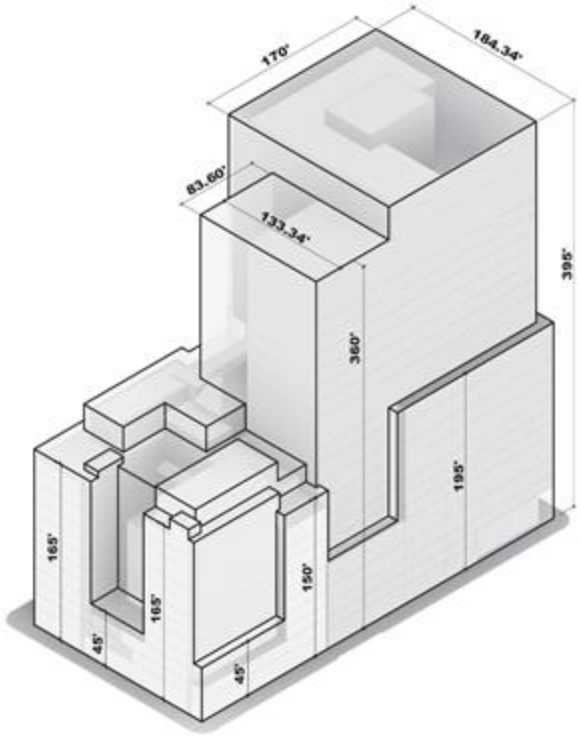

Envelope 2

ZR 74-904 Special Permit

<u>Requested waivers to facilitate existing buildings on the western portion along Park Avenue.</u>

- Maximum Front Wall Height
- **Minimum Required Front Wall Height and Location –** to permit the street walls at the midblock on Park Avenue, at the location of a new entrance to the mother-baby portion of the hospital, and at the intersections of Park Avenue and East 76th Street and East 77th Street to continue to be less than 125 feet and offset from the street line.
- Maximum Lot Coverage

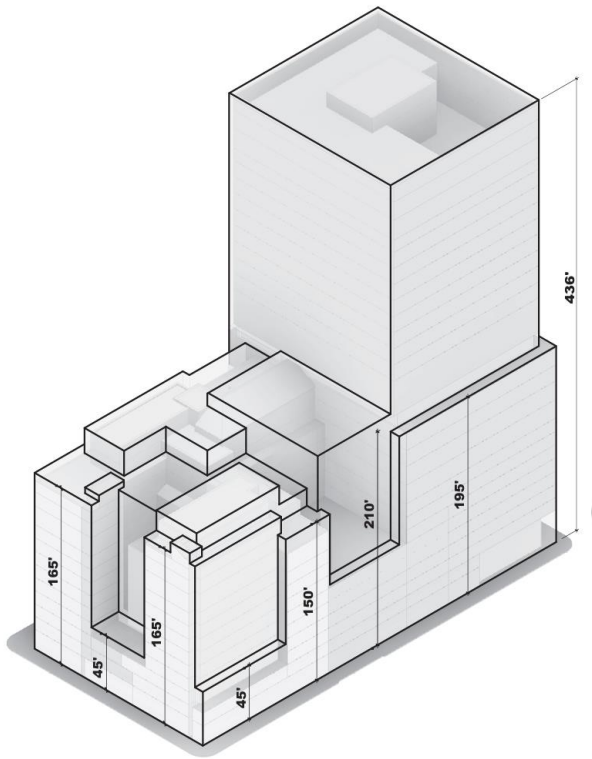

Envelope 1

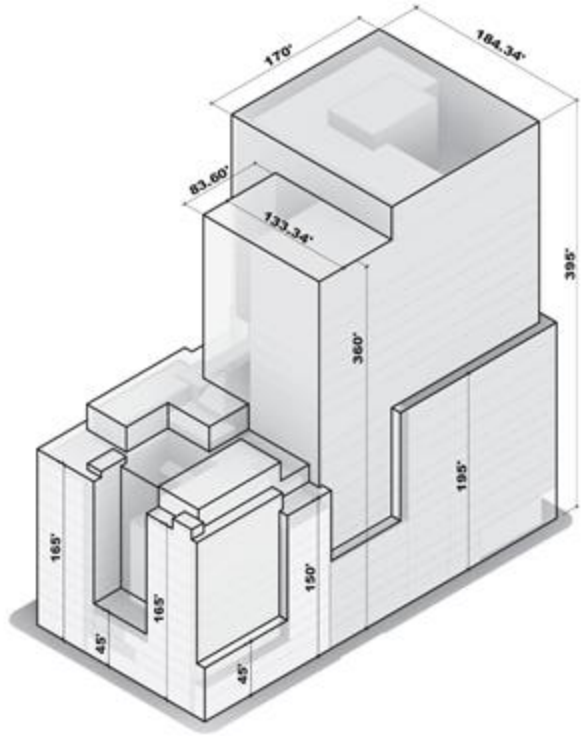

Envelope 2

ZR 74-904 Special Permit

<u>Requested waivers to facilitate existing buildings on the western portion along Park Avenue.</u>

- Maximum Front Wall Height
- Minimum Required Front Wall Height and Location
- **Maximum Lot Coverage –** to permit the envelopes encompassing the existing buildings within the Special Park Improvement District.

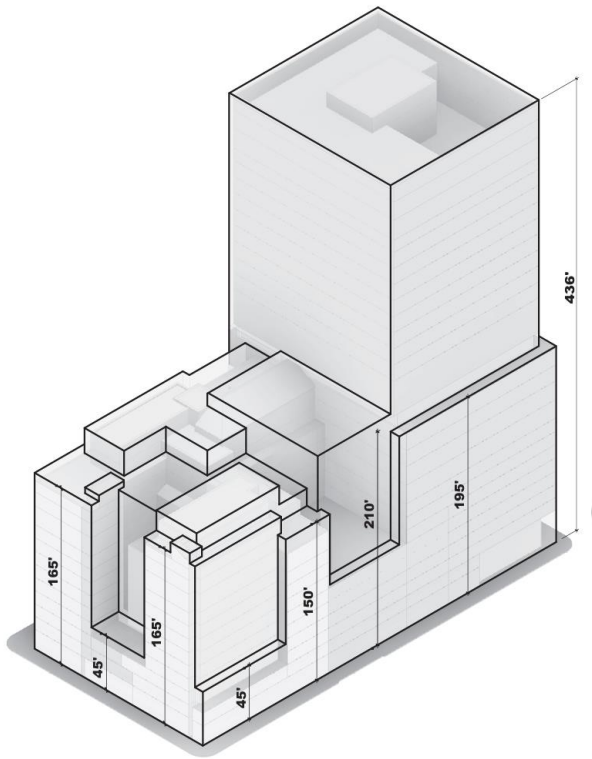

Envelope 1

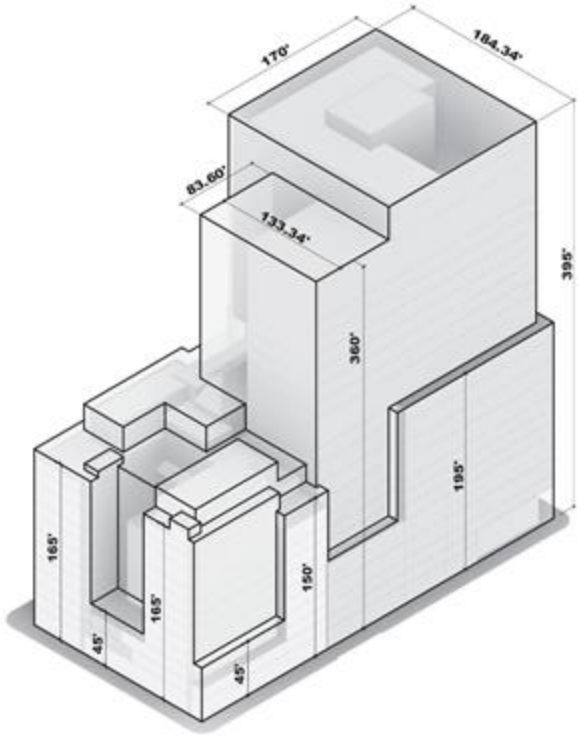

Envelope 2

Transit Authorization and Certification

ZR 66-21(C) Transit Volume Chairperson Certification – to dedicate an on-site transit easement volume.

ZR 66-511 Authorization – to facilitate a floor area increase of up to 0.5 FAR in connection with improvements to the southbound platform of the 77th Street station within the dedicated easement volume. Improvements include: replacement of sidewalk stairs with new 15’-4” wide stairway and an ADA accessible elevator.

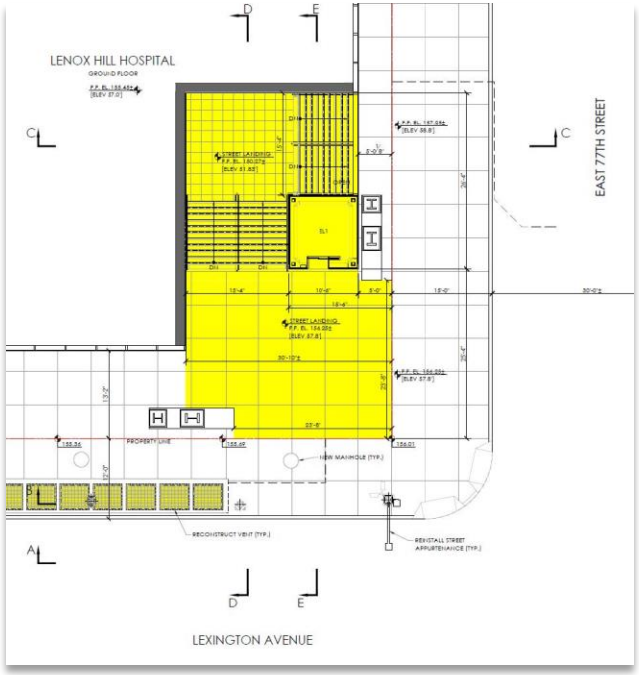



Racial Equity Report on Housing and Opportunity

Demographic Conditions

Figure 1: Race & Ethnicity, 2020

Shows the share of area population by mutually exclusive race and Hispanic ethnicity. Compares the local area to the borough and city.

"In 2020, [percent] of the population in [area] identified as [race/ethnicity]."

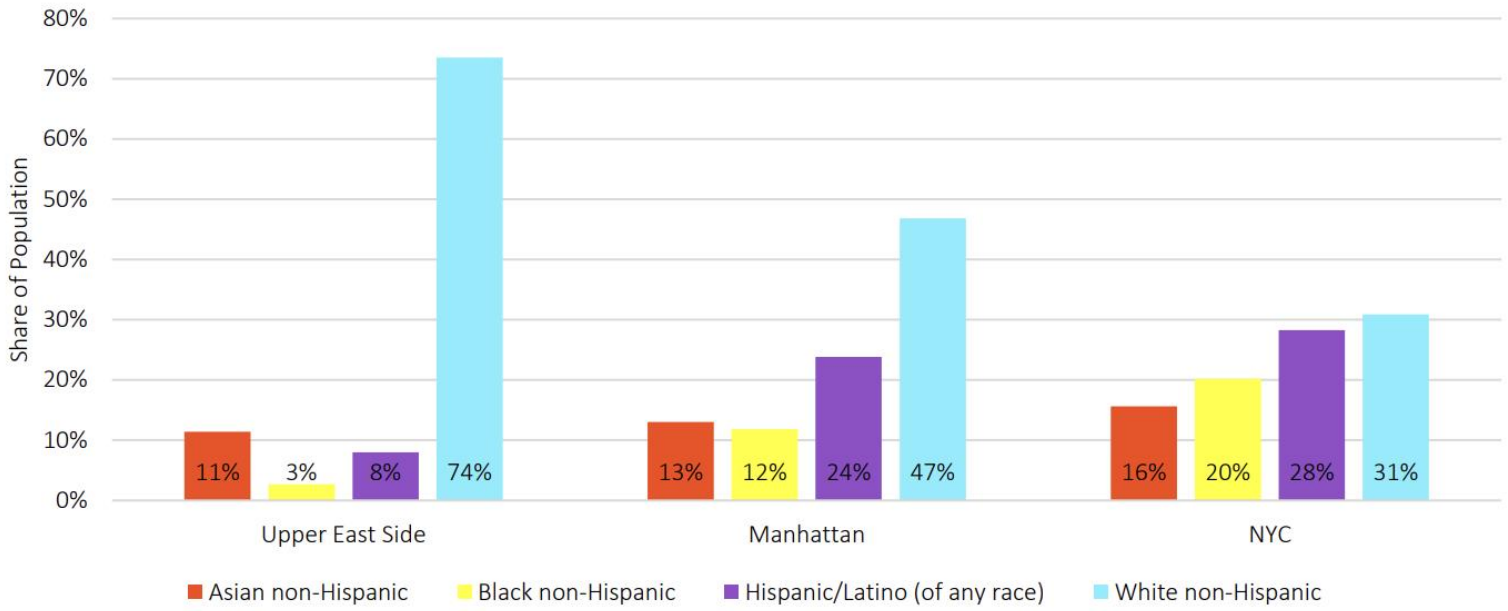

Source: Census 2020; Community Profile Table 1.01

Racial Equity Report on Housing and Opportunity

Figure 2: Percent Change in Race & Ethnicity, 2010 to 2020

Shows the percent change of the area population by mutually exclusive race and Hispanic ethnicity. Compares the local area to the borough and city.

"From 2010 to 2020, the [race/ethnicity] population in [area] increased/decreased by [percent]."

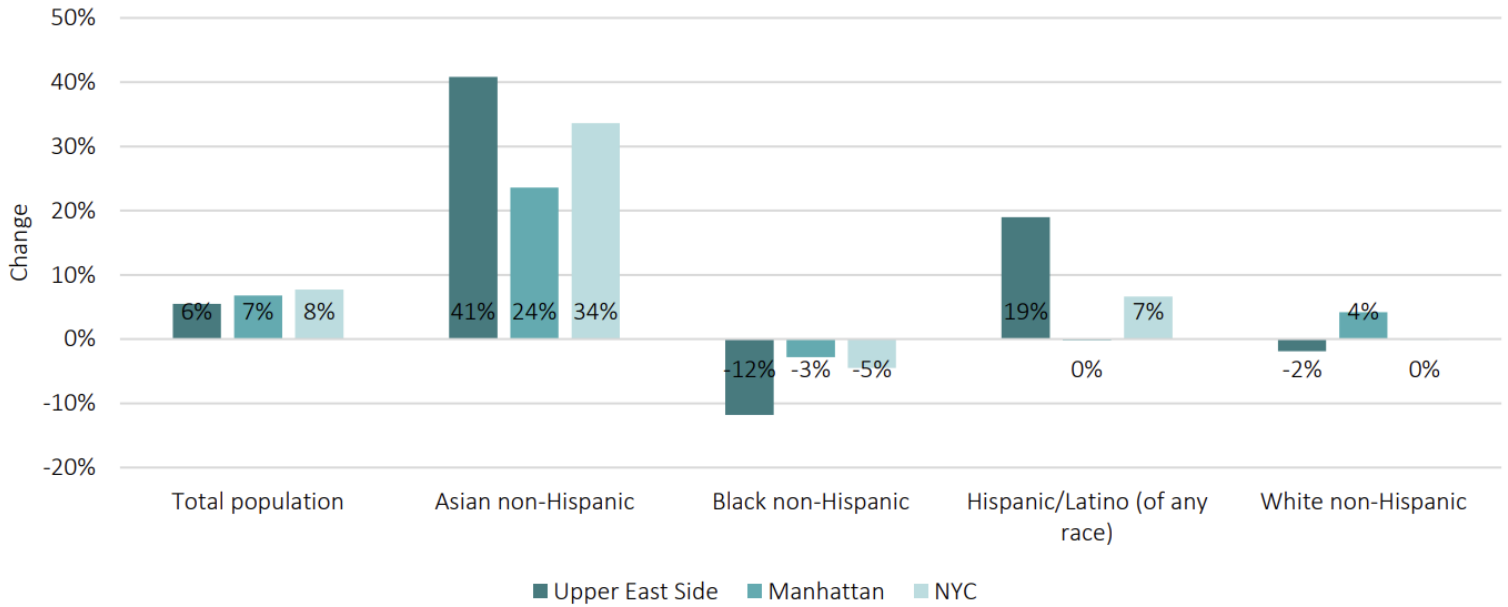

Source: Census 2010, 2020; Community Profile Table 1.01

Environmental Review

- A Notice of Completion of a Draft Environmental Impact Statement (DEIS) was issued on January 31, 2025.

- DEIS identified significant adverse impacts with respect to:
  - *Shadows*
  - *Construction (noise)*

- No other significant adverse impacts were identified.

- Mitigation measures are identified in the DEIS and will be explored further in the FEIS.

Summary

Lenox Hill Hospital Expansion and Renovation

- 475 Single-bed patient rooms
- State-of-the-art operating rooms
- New Emergency Department
- Dedicated Mother-Baby Center
- Improved vehicular and pedestrian circulation
- Access improvement for 77th Street subway station

Requested Actions

- Zoning Map Amendment
- Zoning Text Amendments
- Special Permit
- Authorization



Illustrative Only