APPENDIX B: NOISE

SPX **Cooling Technologies**

Balcke | Hamon Dry Cooling | Marley

RWR
8-Oct-08

Sound data for a free and unobstructed environment.
Sound Pressure Level (SPL) expressed in dB (re: 20E-6 Pa).

Model NLC244, 3658-6-36N fans @ 20 BHP, 180 RPM OO# 156401

Distance	Location	63	125	250	500	1000	2000	4000	8000	dBA
5'	Above Fan	72	71	70	75	70	69	62	48	76
50'	Above Fan	68	63	62	61	62	56	52	40	65
5'	Louver Face	68	69	69	70	67	60	57	53	71
50'	Louver Face	60	55	57	57	59	54	45	40	62
5'	Cased Face	64	63	59	59	59	53	51	44	63
50'	Cased Face	63	54	55	56	57	53	48	37	60

BAC Closed Circuit Cooling Tower Selection Program

Release 6.4 NA

Program data and calculations are correct as of Mar. 18, 2008.

Copyright © 2006 Baltimore Aircoil Company, Inc. All rights reserved.

To:
Attn:
From:

Inquiry No.:
Project Name:
Date: Oct. 16, 2008

Selection Parameters

Model & Fan Motor		Model Accessories	
Product Line:	Series FXV w/ Whisper Q Fan	Unit Intake Option:	Intake Sound Attenuation ✓
Number of Units:	1	Unit Internal Option:	(None)
Model:	FXV-Q661	Unit Discharge Option:	(None)
Coil Type:	Standard Coil	Unit Access Option:	Internal Platform
Standard Total Fan Motor Power Per Unit:	45 HP		
Fan Motor:	Standard Motor		
Total Pump Motor Power Per Unit:	7.5 HP		

Maximized Capability, per Unit, Wet Operation

Flow Rate:	897.00 GPM
Fluid:	Water
Heat Rejection:	4,483,206 BTUH
Fluid Pressure Drop:	5.01 psi
Entering Fluid Temperature:	95.00° F
Leaving Fluid Temperature:	85.00° F
Wet Bulb Temperature:	77.38° F MAX
Range:	10.00° F

Applicable Warning(s) for Selections Indicated Above

a. One or more selection parameters, or the unit configuration, is outside the scope of this product line's CTI certification.

Baltimore Aircoil Company

Sound Rating Program, 4/27/2007 Release

FXV Closed Circuit Cooling Tower

Model: FXV-Q661
No. of Fans: (3) 5.5 ft. Diameter Fan Per Cell
Fan Type: Whisper Quiet Fan
Motor HP: 15 HP per fan
Fan Speed & Fan Power Used: 75 % of full speed, 19 BHP
Accessories: Intake Only Attenuation

Octave band and A-weighted sound pressure levels (Lp) are expressed in decibels (dB) reference 0.0002 microbar. Sound power levels (Lw) are expressed in decibels (dB) reference one picowatt. Octave band 1 has a center frequency of 63 Hertz.

Top Lp
Sound Pressure (dB)

Octave Band	Distance	
	5 ft	50 ft
1	77	66
2	77	66
3	74	59
4	71	59
5	65	53
6	68	52
7	60	47
8	55	41
A-wgtd	74	60

Back Lp
Sound Pressure (dB)

Octave Band	Distance	
	5 ft	50 ft
1	67	62
2	67	60
3	62	51
4	53	48
5	50	39
6	43	38
7	36	33
8	27	28
A-wgtd	58	50

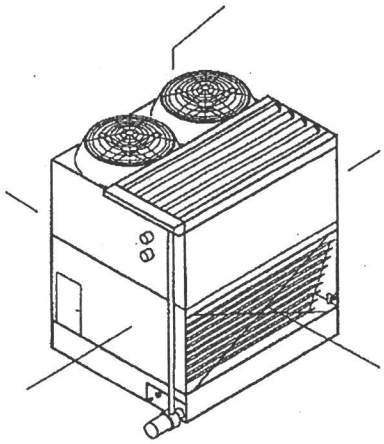

End Lp
Sound Pressure (dB)

Octave Band	Distance	
	5 ft	50 ft
1	67	62
2	63	55
3	62	54
4	56	50
5	48	41
6	42	40
7	36	35
8	25	25
A-wgtd	57	51

Connection End Lp
Sound Pressure (dB)

Octave Band	Distance	
	5 ft	50 ft
1	67	62
2	63	55
3	62	54
4	56	50
5	48	41
6	42	40
7	36	35
8	25	25
A-wgtd	57	51

Air Inlet Lp
Sound Pressure (dB)

Octave Band	Distance	
	5 ft	50 ft
1	77	69
2	77	63
3	71	54
4	63	51
5	52	43
6	48	41
7	42	39
8	37	23
A-wgtd	66	53

Sound Power (dB)

Octave Band	Center Frequency (Hertz)	Lw
1	63	97
2	125	94
3	250	87
4	500	86
5	1000	79
6	2000	78
7	4000	73
8	8000	66

1999 © Baltimore Aircoil Company. All Rights Reserved.

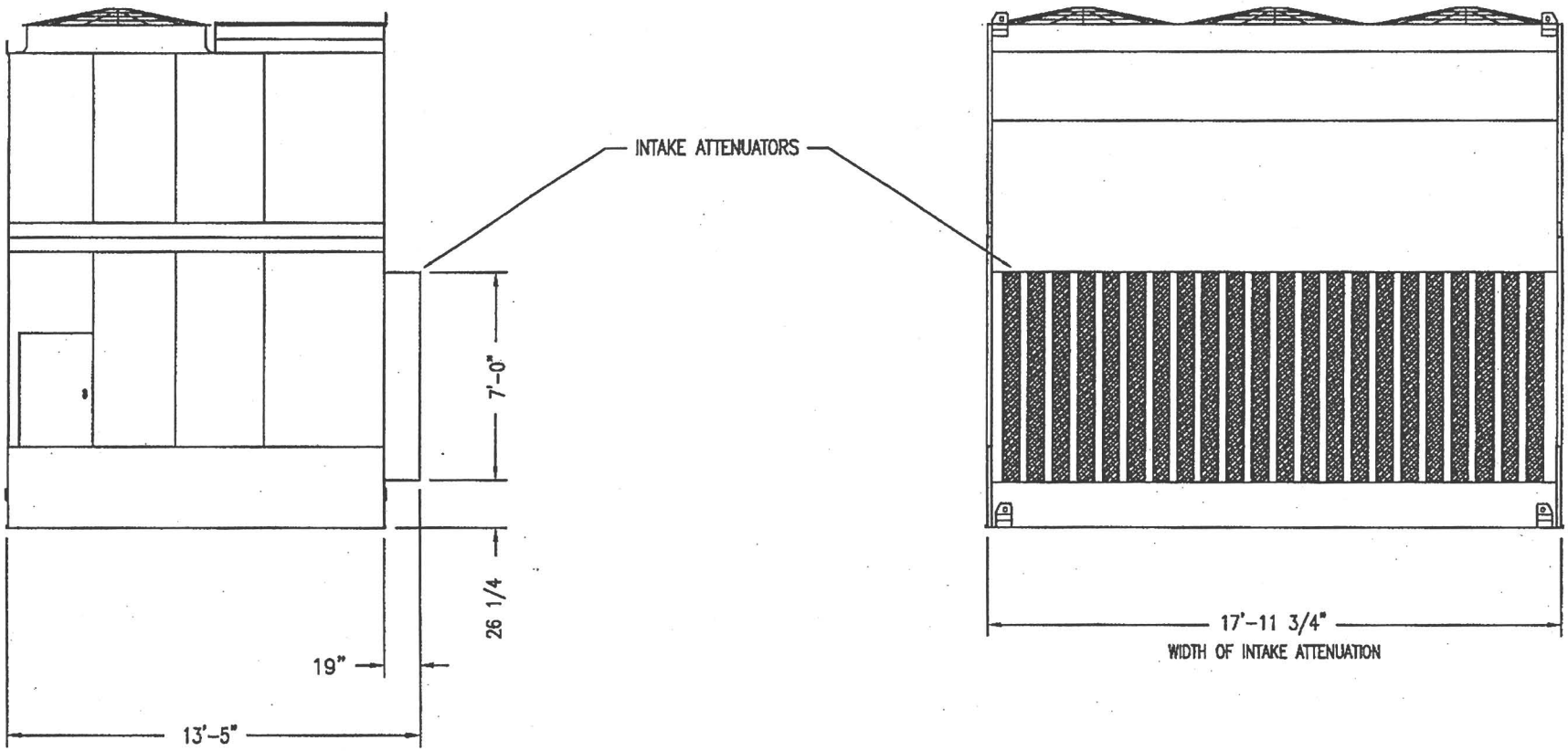

SOUND ATTENUATION WEIGHT DATA (SEE NOTE 2)	
MODEL NUMBER	WEIGHT (LBS)
FXV-661	1070
FXV-662	1070
FXV-663	1070
FXV-664	1070
FXV-Q660	1070
FXV-Q661	1070

NOTE:
1. ATTENUATION SHIPS SEPARATELY FOR FIELD INSTALLATION.
2. WEIGHTS GIVEN ARE FOR INTAKE ATTENUATION AND SHOULD BE ADDED TO STANDARD UNIT WEIGHT.

B.A.C. ORDER NO:	BALTIMORE AIRCOIL COMPANY	SERIES 1500 INTAKE ATTENUATION
DATE:		DRAWING NUMBER: BAC-17462A

MODEL NUMBER	SHIPPING WEIGHT	WEIGHT LOADING (LBS.)										
		OPER. WEIGHT	P1	P2	P3	P4	P5	P6	P7	P8	P9	P10
FXV– 661	15,510	27,070	2611	1486	2246	1486	2611	6553	479	2566	479	6553
FXV– 662	17,070	29,290	2927	1489	2248	1489	2927	7343	479	2566	479	7343
FXV– 663	18,670	31,570	3251	1493	2252	1493	3251	8153	479	2566	479	8153
FXV– 664	20,280	33,810	3569	1498	2258	1498	3569	8947	479	2566	479	8947
FXV– T662	20,280	33,810	3569	1498	2258	1498	3569	8947	479	2566	479	8947
FXV– Q660	17,070	29,290	2927	1489	2248	1489	2927	7343	479	2566	479	7343
FXV– Q661	20,280	33,810	3569	1498	2258	1498	3569	8947	479	2566	479	8947

NOTES:
1. SUPPORTING STEELWORK AND ANCHOR BOLTS TO BE DESIGNED AND FURNISHED BY OTHERS.
2. ALL SUPPORTING STEEL MUST BE LEVEL AT TOP.
3. BEAMS SHOULD BE SELECTED IN ACCORDANCE WITH ACCEPTED STRUCTURAL PRACTICE, MAXIMUM DEFLECTION OF BEAM UNDER UNIT TO BE 1/360 OF SPAN, NOT TO EXCEED 1/2 INCH.
4. ALTERNATELY THE UNIT MAY BE SUPPORTED ON COLUMNS AT SIX (6) LOCATIONS. CONSULT YOUR BAC REPRESENTATIVE FOR DETAILS.
5. IF VIBRATION ISOLATION RAILS ARE USED BETWEEN UNIT AND SUPPORTING STEEL, BE CERTAIN TO ALLOW FOR THE LENGTH OF THE VIBRATION RAILS WHEN DETERMINING LENGTH OF SUPPORTING STEEL. VIBRATION RAIL LENGTH AND MOUNTING HOLE LOCATIONS MAY DIFFER FROM THOSE OF THE UNIT. REFER TO VIBRATION ISOLATOR DRAWINGS FOR THIS DATA.
6. DO NOT USE THIS DRAWING TO SIZE POINT VIBRATION ISOLATORS. SEE YOUR BAC REPRESENTATIVE FOR DETAILS.

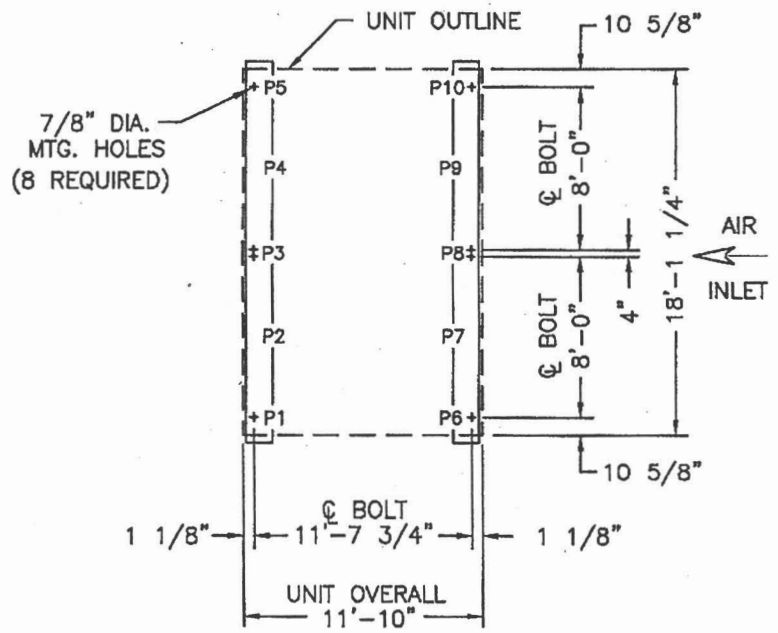

PLAN VIEW



END ELEVATION

B.A.C. ORDER NO:	BALTIMORE AIRCOIL COMPANY	SERIES 1500, FLUID COOLER STANDARD STEEL SUPPORT
DATE:		DRAWING NUMBER: BAC–17154A B

2002© Baltimore Aircoil Company. All Rights Reserved.

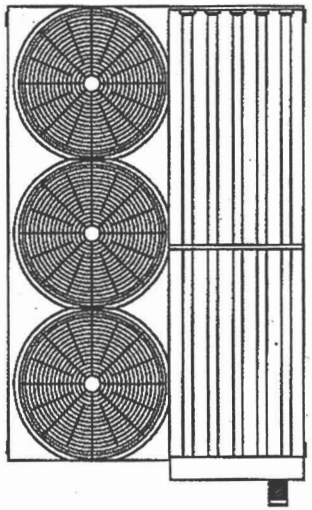

PLAN VIEW

MODEL NUMBER	SHIPPING WEIGHT	OPERATING WEIGHT	HEAVIEST SECTION (UPPER)	CONNECTION SIZE	A	F
FXV– Q660	17,070	29,290	11,250	8"	14'–5 1/2"	29 3/8"
FXV– Q661	20,280	33,810	14,460	8"	14'–5 1/2"	47 7/8"

DIMENSION H	
FAN OPTION	H
STD FAN & LOW SOUND FAN	16'– 4 1/4"
WHISPER QUIET FAN	16'– 9 3/4"

NOTES:

1. ALL DIMENSIONS ARE IN FEET AND INCHES. WEIGHTS ARE IN POUNDS.
2. DIMENSIONS SHOWING LOCATION OF COIL CONNECTIONS ARE APPROXIMATE AND SHOULD NOT BE USED FOR PREFABRICATION OF CONNECTING PIPING.
3. COIL CONNECTIONS ARE IPS BEVELLED FOR WELDING.
4. CONNECTIONS 3" & SMALLER ARE MPT.
5. THE AREA ABOVE THE DISCHARGE OF THE FAN MUST BE UNOBSTRUCTED.
6. FOR WEIGHT LOADING AND SUPPORT REQUIREMENTS REFER TO THE SUGGESTED STEEL SUPPORT DRAWING.

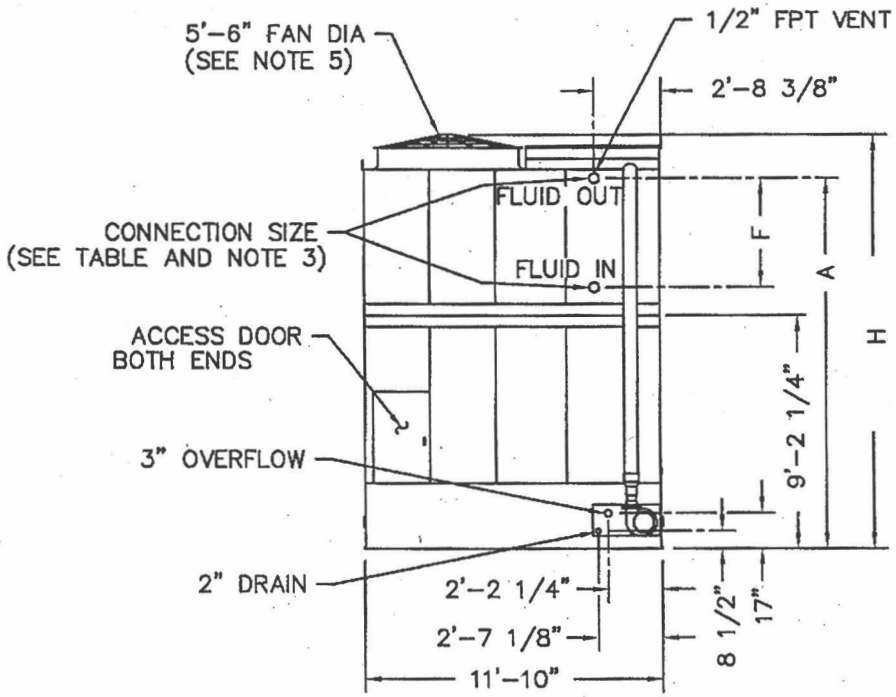

END ELEVATION

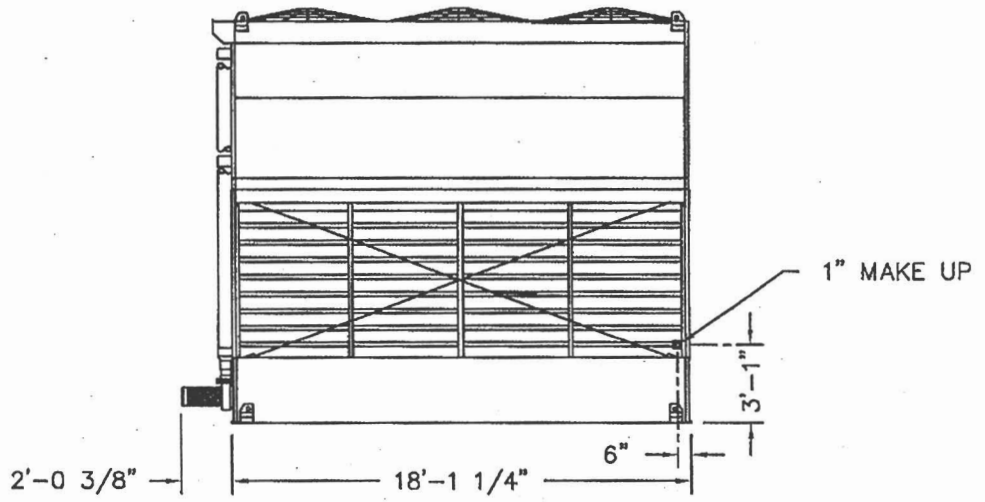

SIDE ELEVATION

(RH UNIT)

B.A.C. ORDER NO:	BALTIMORE AIRCOIL COMPANY	SERIES 1500 FLUID COOLER
DATE:		DRAWING NUMBER: BAC–17616A B

WEST 54TH STREET (NARROW STREET)

PROJECT SITE 470'-4¼"

11TH AVENUE (WIDE STREET)

PROJECT SITE 200'-10"

55'-0" | 25'-0" TYP. | 1'-6" | 20'-0" | 1'-6" | 17'-6" | 24'-1" | 33'-5" | 55'-0" | 30'-0"

AUTO DEALERSHIP ENTRY

RES. ENTRY

LANDSCAPED COURTYARD ROOF HT. 40'-0"

PROPOSED BLDG. ROOF HT. 96'-6"

ROOF HT. 106'-6"

ROOF HT. 116'-6"

ROOF HT. 128'-6"

ROOF HT. 137'-6"

ROOF HT. 147'-6"

ROOF HT. 157'-6"

ROOF HT. 167'-6"

ROOF HT. 177'-6"

ROOF HT. 187'-6"

ROOF HT. 197'-6"

ROOF HT. 207'-6"

ROOF HT. 217'-6"

ROOF HT. 227'-6"

ROOF HT. 237'-6"

ROOF HT. 248'-6"

ROOF HT. 258'-6"

ROOF HT. 268'-6"

ROOF HT. 278'-6"

ROOF HT. 288'-6"

ROOF HT. 298'-6"

ROOF HT. 309'-6"

ROOF HT. 318'-6"

ROOF HT. 328'-6"

ROOF HT. 35'-7"(T.O.S)

MECHANICAL BULKHEAD HT. 53'-7"

MECHANICAL BULKHEAD ROOF HT. 338'-6"

SWIMMING POOL ROOF HT. 52'-9"

ROOF HT. 35'-8"(T.O.S)

MECHANICAL BULKHEAD HT. 349'-10"

MECHANICAL BULKHEAD HT. 53'-7"

ROOF HT. 328'-0" (T.O.S.)

LANDSCAPED COURTYARD ROOF HT. 40'-0"

45'-5" | 48'-7" | 51'-10" | 55'-0" | 54'-10" | 52'-2" | 93'-10"

EXIST. BLDG. 1082/LOT.

55'-0" | 33'-1" | 24'-3" | 18'-9" | 25'-0" TYP. | 55'-0" | 30'-0"

RES. ENTRY

COMM. LOADING AREA

AUTO DEALERSHIP ENTRY

COMM. LOADING AREA

ACCESSORY PARKING ENTRY

1'-6" | 18'-0" | 1'-6" | 1'-6" | 20'-8" | 1'-6" | 1'-6" | 22'-6" | 1'-6" | 1'-6" | 22'-0" | 1'-6"

470'-4¼"

PROPERTY LINE

PROPERTY LINE

WEST 53RD STREET (NARROW STREET.)

LEGEND

- AREA OF GENERAL LARGE SCALE DEVELOPMENT AND PROPERTY LINE
- LANDSCAPED PRIVATE TERRACE
- LANDSCAPED COURTYARD

1 SITE PLAN

SCALE 1/16" = 1'-0"

0 10' 20' 40' 60'

NOTE: LOCATION OF STREET TREES SUBJECT TO DOT APPROVAL

OWNER:	ARCHITECT:	PROJECT:	KEY PLAN	DRAWING TITLE:	DATE & ISSUE:	PROJECT NO.: 20695.00