SPECIAL GOWANUS MIXED USE DISTRICT TEXT AMENDMENT

Matter underlined is new, to be added;
Matter ~~struck out~~ is to be deleted;
Matter within # # is defined in Section 12-10;
* * * indicates where unchanged text appears in the Zoning Resolution

ARTICLE I
GENERAL PROVISIONS

Chapter 1
Title, Establishment of Controls and Interpretation of Regulations

* * *

11-12
Establishment of Districts

* * *

11-122
Districts established

In order to carry out the purposes and provisions of this Resolution, the following districts are hereby established:

* * *

Special Purpose Districts

* * *

Establishment of the Special Governors Island District

In order to carry out the special purposes of this Resolution, as set forth in Article XIII, Chapter 4, the #Special Governors Island District# is hereby established.

Establishment of the Special Gowanus Mixed Use District

In order to carry out the special purposes of this Resolution, as set forth in Article XIII, Chapter 9, the #Special Gowanus Mixed Use District# is hereby established.

Establishment of the Special Grand Concourse Preservation District

In order to carry out the special purposes of this Resolution as set forth in Article XII, Chapter 2, the #Special Grand Concourse Preservation District# is hereby established.

* * *

Chapter 2

* * *

12-10
DEFINITIONS

* * *

Special Governors Island District

The "Special Governors Island District" is a Special Purpose District designated by the letters "GI" in which the special regulations set forth in Article XIII, Chapter 4, apply.

Special Gowanus Mixed Use District [date of adoption]

The "Special Gowanus Mixed Use District" is a Special Purpose District designated by the letter "G" in which special regulations set forth in Article XIII, Chapter 9, apply.

Special Grand Concourse Preservation District

The "Special Grand Concourse Preservation District" is a Special Purpose District designated by the letter "C" in which special regulations set forth in Article XII, Chapter 2, apply.

* * *

Waterfront area (4/22/09)

The "waterfront area" is the geographical area comprising all #blocks# between the pierhead line and a line 800 feet landward from the #shoreline#. Where such line intersects a #block#, the entire #block# shall be included and the #waterfront area# boundary shall coincide with the centerline of the landward boundary #street# or other #block# boundary. Notwithstanding the above, any #zoning lot#, the boundaries of which were established prior to November 1, 1993, and which is not closer than 1,200 feet from the #shoreline# at any point and which does not #abut# a waterfront public park, shall not be included in the #waterfront area#.

[The struckout provisions of this paragraph have been moved to 139-021]

For the purposes of this definition, only #blocks# along waterways that have a minimum width of 100 feet between opposite #shorelines#, with no portion downstream less than 100 feet in width, shall be included within the #waterfront area#. However, #blocks# bounding ~~the Gowanus Canal north of Hamilton Avenue, as shown on the City Map,~~ Dutch Kills and the portion of the

Bronx River located south of the prolongation of East 172nd Street, shall be included within the #waterfront area#.

* * *

Chapter 4
Sidewalk Cafe Regulations

* * *

14-44
Special Zoning Districts Where Certain Sidewalk Cafes Are Permitted

#Enclosed# or #unenclosed sidewalk cafes# shall be permitted, as indicated, in the following special zoning districts, where allowed by the underlying zoning. #Small sidewalk cafes#, however, may be located on #streets# or portions of #streets# within special zoning districts pursuant to the provisions of Section 14-43 (Locations Where Only Small Sidewalk Cafes Are Permitted).

* * *

Brooklyn	#Enclosed Sidewalk Cafe#	#Unenclosed Sidewalk Cafe#
Bay Ridge District	Yes	Yes
Coney Island District	No	Yes
Coney Island Mixed Use District	Yes	Yes
Downtown Brooklyn District	Yes	Yes
Enhanced Commercial District 1 (Fourth Avenue)	No	Yes
Enhanced Commercial District 4 (Broadway, Bedford-Stuyvesant)	No	Yes
<u>Gowanus Mixed Use District</u>	<u>No</u>	<u>Yes</u>
Mixed Use District-8 (Greenpoint-Williamsburg)	Yes	Yes
Ocean Parkway District[1]	Yes	Yes
Sheepshead Bay District	No	Yes

[1] #Sidewalk cafes# are not allowed on Ocean Parkway

* * *

ARTICLE II
RESIDENCE DISTRICT REGULATIONS

Chapter 3
Residential Bulk Regulations in Residence Districts

23-00
APPLICABILITY AND GENERAL PURPOSES

23-01
Applicability of This Chapter

* * *

23-011
Quality Housing Program

* * *

(c) In the districts indicated without a letter suffix, the optional Quality Housing #bulk# regulations permitted as an alternative pursuant to paragraph (b) of this Section, shall not apply to:

* * *

(2) Special Purpose Districts

However, such optional Quality Housing #bulk# regulations are permitted as an alternative to apply in the following Special Purpose Districts:

#Special 125th Street District#;

#Special Downtown Brooklyn District#;

#Special Downtown Far Rockaway District#;

#Special Downtown Jamaica District#;

#Special East Harlem Corridors District#;

#Special Gowanus Mixed Use District#;

#Special Grand Concourse Preservation District#;

* * *

ARTICLE VI
SPECIAL REGULATIONS APPLICABLE TO CERTAIN AREAS

Chapter 2
Special Regulations Applying in the Waterfront Area

* * *

62-10
GENERAL PROVISIONS

62-11
Definitions

* * *

Waterfront block or waterfront zoning lot

A “waterfront block” or "waterfront zoning lot” is a #block# or #zoning lot# in the #waterfront area# having a boundary at grade coincident with or seaward of the #shoreline#. For the purposes of this Chapter:

(a) a #block# within the #waterfront area# shall include the land within a #street# that is not improved or open to the public, and such #street# shall not form the boundary of a #block#;

(b) a #block# within the #waterfront area# that #abuts# a #public park# along the waterfront shall be deemed to be part of a #waterfront block#; and

(c) a #zoning lot# shall include the land within any #street# that is not improved or open to the public and which is in the same ownership as that of any contiguous land.

[The provisions of this paragraph have been moved to 139-021]

~~However, any #block# or #zoning lot# in the #waterfront area# having a boundary within or coincident with the boundaries of the Gowanus Canal, as shown on the City Map, shall be a #waterfront block# or #waterfront zoning lot#, respectively.~~

Any #zoning lot#, the boundaries of which were established prior to November 1, 1993, and which is not closer than 1,200 feet from the #shoreline# at any point and which does not #abut# a #public park# along the waterfront, shall be deemed outside of the #waterfront block#.

* * *

62-13
Applicability of District Regulations

* * *

The regulations of this Chapter shall apply in the following Special Purpose Districts except as specifically modified within the Special Purpose District provisions:

#Special Gowanus Mixed Use District#

#Special Inwood District#

#Special St. George District#.

* * *

62-90
WATERFRONT ACCESS PLANS

* * *

62-93
Borough of Brooklyn

The following Waterfront Access Plans are hereby established within the Borough of Brooklyn. All applicable provisions of Article VI, Chapter 2, remain in effect within the areas delineated by such plans, except as expressly set forth otherwise in the plans:

BK-1: Greenpoint-Williamsburg, as set forth in Section 62-931;

BK-2: Gowanus Canal, in the #Special Gowanus Mixed Use District#, as set forth in Section 139-50 (GOWANUS CANAL WATERFRONT ACCESS PLAN).

* * *

ARTICLE XIII
SPECIAL PURPOSE DISTRICTS

Chapter 2
Special Enhanced Commercial District

* * *

132-11
Special Enhanced Commercial Districts Specified

The #Special Enhanced Commercial District# is mapped in the following areas:

(a) #Special Enhanced Commercial District# 1

The #Special Enhanced Commercial District# 1 (EC-1) is established on November 29,

2011, on the following #designated commercial streets# as indicated on #zoning maps# 16c and 16d:

(1) Fourth Avenue, in the Borough of Brooklyn, generally between 24th Street and 15th Street and Pacific Street and Atlantic Avenue.

(b) #Special Enhanced Commercial District# 2

* * *

ARTICLE XIII
SPECIAL PURPOSE DISTRICTS

Chapter 9
Special Gowanus Mixed Use District

139-00
GENERAL PURPOSES

The "Special Gowanus Mixed Use District" established in this Resolution is designed to promote and protect the public health, safety and general welfare of the Gowanus neighborhood and the greater community. These general goals include, among others, the following specific purposes:

(a) To recognize and enhance the vitality and character of an existing mixed use neighborhood;

(b) Encourage stability and growth in the Gowanus neighborhood by permitting compatible light manufacturing and residential uses to coexist;

(c) To encourage investment in a mixed use neighborhood by permitting the expansion and new development of a wide variety of uses in a manner that ensures the health and safety of residents and employees;

(d) To improve the physical appearance of the streetscape by providing and coordinating harmonious open space, sidewalk amenities and landscaping within a consistent urban design;

(e) To promote and enhance visual and physical access to and around the Gowanus Canal;

(f) To enhance neighborhood economic diversity by broadening the range of housing choices for residents at varied incomes;

(g) To expand local employment opportunities and to promote the opportunity for workers to live in the vicinity of their work; and

(h) To promote the most desirable use of land and thus conserve the value of land and buildings and thereby protect the City's tax revenues.

139-01
Definitions

Definitions specifically applicable to this Chapter are set forth in this Section. Other defined terms are set forth in Sections 12-10 (DEFINITIONS), 37-311 (Definitions), and 62-11 (Definitions). The definition of #development# shall be as set forth in Section 12-10, except where otherwise specified.

Gowanus mix uses

"Gowanus mix uses" are #community facility#, #commercial#, and #manufacturing uses# set forth in Section 139-13 (Gowanus Mix Uses).

Gowanus retail and entertainment uses

"Gowanus retail and entertainment uses" are #community facility# and #commercial uses# set forth in Section 139-14 (Gowanus Retail and Entertainment Uses).

Mixed use district

In the #Special Gowanus Mixed Use District#, a "mixed use district" shall be any M1 District paired with a #Residence District#, as indicated on the #zoning maps#. For the purposes of applying provisions of districts adjacent to a #mixed use district#, a #mixed use district# shall be considered a #Manufacturing District#.

Select community facility uses

For the purposes of this Chapter, the following #community facility uses# shall also be considered "select community facility uses":

#Schools#;

Houses of worship, rectories or parish houses;

Health facilities requiring approval under Article 28 of the Public Health Law of the State of New York that, prior to July 10, 1974, have received approval of Part I of the required application from the Commissioner of Health; and

Non-profit, voluntary, or proprietary hospitals.

139-02

General Provisions

In harmony with the general purposes and content of this Resolution and the general purposes of the #Special Gowanus Mixed Use District#, the regulations of this Chapter shall apply within the #Special Gowanus Mixed Use District#. The regulations of all other Chapters of this Resolution are applicable, except as modified, supplemented or superseded by the provisions of this Chapter. In the event of a conflict between the provisions of this Chapter and other regulations of this Resolution, the provisions of this Chapter shall control.

139-021
Applicability of regulations to the Gowanus Canal

In the #Special Gowanus Mixed Use District#, all #blocks# bounding the Gowanus Canal shall be considered #waterfront blocks# within the #waterfront area#, and the provisions of Article VI, Chapter 2 (Special Regulations Applying in the Waterfront Area), as modified by the provisions of this Chapter, shall apply.

All #zoning lots# having a boundary within or coincident with the boundaries of the Gowanus Canal, shall be considered #waterfront zoning lots#. All portions of such a #zoning lot# shall be included as part of the #upland lot# and deemed to be #lot area#, regardless of the location of the #shoreline#.

For the purposes of this Chapter, the boundaries of the Gowanus Canal shall be as shown on the City Map, and shall include the First Street Basin.

139-022
Applicability of the Inclusionary Housing Program

For the purposes of applying the Inclusionary Housing Program provisions set forth in Sections 23-154 and 23-90 (INCLUSIONARY HOUSING), #Mandatory Inclusionary Housing areas# within the #Special Gowanus Mixed Use District# are shown on the maps in APPENDIX F (Inclusionary Housing Areas and Mandatory Inclusionary Housing Areas) of this Resolution. Such provisions are modified by the provisions of this Chapter.

139-023
Applicability of the Quality Housing Program

In the #Special Gowanus Mixed Use District#, all #buildings# containing #residences# shall be #developed# or #enlarged# in accordance with the Quality Housing Program and the regulations of Article II, Chapter 8 (The Quality Housing Program) shall apply. Such #buildings# shall be considered #Quality Housing buildings#

139-024
Applicability of Article VI, Chapter 4

In the event of a conflict between the provisions of this Chapter and the provisions of Article VI, Chapter 4 (Special Regulations Applying in Flood Hazard Areas), the provisions of Article VI, Chapter 4, shall control.

139-025
Applicability of Article XII, Chapter 3

In #Mixed Use Districts#, the special #use#, #bulk#, and parking and loading provisions of Article XII, Chapter 3 (Special Mixed Use Districts) shall apply, except where modified by the provisions of this Chapter, and shall supplement or supersede the provisions of the designated #Residence# or M1 District, as applicable.

Notwithstanding the provisions of Section 123-10, in the event of a conflict between the provisions of this Chapter and the provisions of Article XII, Chapter 3, the provisions of this Chapter shall control.

139-03
District Plan and Maps

The regulations of this Chapter are designed to implement the #Special Gowanus Mixed Use District# Plan. The district plan includes the following maps in the Appendices to this Chapter:

Appendix A – Special Gowanus Mixed Use District

Map 1	Subdistricts
Map 2	Subareas
Map 3	Ground Floor Use Requirements
Map 4	Sidewalk Widening Lines

Appendix B – Special Gowanus Canal Waterfront Access Plan

Map 1	Parcel Designation
Map 2	Public Access Elements
Map 3	Designated Visual Corridors

The maps are hereby incorporated and made part of this Resolution for the purpose of specifying locations where the special regulations and requirements set forth in the text of this Chapter apply.

139-04
Subdistricts

In order to carry out the purposes and provisions of this Chapter, five subdistricts are established within the #Special Gowanus Mixed Use District#. In addition, subareas are established within Subdistricts B and D.

Subdistrict A – Fourth Avenue Subdistrict
Subdistrict B – Upland Blocks Subdistrict
Subarea B1
Subarea B2

Subdistrict C – North Canal Corridor Subdistrict
Subdistrict D – South Canal Corridor Subdistrict
Subarea D1
Subarea D2
Subarea D3
Subarea D4
Subarea D5
Subarea D6
Subdistrict E – First Street Subdistrict

The boundaries of the subdistricts are shown on Map 1 and the boundaries of the subareas are shown on Map 2 in Appendix A of this Chapter.

139-10
SPECIAL USE REGULATIONS

In Subdistricts A, B, C, and D the underlying #use# regulations shall be modified by the provisions of this Section, inclusive. In Subdistrict E, the underlying district regulations shall apply.

139-11
Permitted Uses

In all #Manufacturing Districts# and #Mixed Use Districts#, in addition to the #uses# specified in Article IV, Chapter 2 and Article XII, Chapter 3, respectively, the following #uses# shall also be permitted:

(a) all #uses# listed in Use Group 3, as set forth in Section 22-13;

(b) all #uses# listed in Use Group 4, as set forth in Section 22-14;

(c) food stores, including supermarkets, grocery stores or delicatessen stores, as specified in Section 32-15 (Use Group 6), without limitation as to #floor area# per establishment;

(d) all uses in Use Group 10A, as specified in Section 32-19;

(e) all uses in Use Group 17B, as specified in Section 42-14; and

(f) the manufacture of alcoholic beverages and breweries, as specified in Section 42-15 (Use Group 18), without limitation on size. Where provided, the provisions of Section 42-27 (Performance Standards Regulating Fire and Explosive Hazards) shall not apply to such #use#.

139-12
Physical Culture Establishments

In all districts, #physical culture or health establishments# shall be permitted as-of-right. For the purposes of applying the underlying regulations to such #use#, a #physical culture or health establishment# shall be considered a Use Group 9A #use#.

139-13
Gowanus Mix Uses

For the purposes of applying the special #bulk# regulations of Section 139-212 (Gowanus mix), the following #community facility#, #commercial#, and #manufacturing uses# shall also be considered #Gowanus mix uses#:

From Use Group 3, as set forth in Section 22-13:

#schools#, colleges, libraries and museums, as listed in Use Group 3A;

From Use Group 4, as set forth in Section 22-14:

all #uses# in Use Group 4A, except ambulatory diagnostic and treatment health care facilities;

agriculture, including greenhouses, nursuries, and truck gardens as listed in use Group 4B;

From Use Group 6, as set forth in Section 32-15:

custom tailoring, as listed in Use Group 6A;

From Use Group 7, as set forth in Section 32-16:

all #uses# in Use Group 7B;

electric vehicle charging stations and automotive battery swapping facilities as listed in Use Group 7D;

From Use Group 8: as set forth in Section 32-17:

all #uses# listed in Use Group 8B;

From Use Group 9, as set forth in Section 32-18:

blueprinting, business colleges, costume rental, instrument repair, trade schools for adults, and medical labs as listed in Use Group 9A;

photographic printing or developing as listed in Use Group 9B;

From Use Group 10, as set forth in Section 32-19:

photographic or motion picture production studios; radio or television studios;

From Use Group 11, as set forth in Section 32-20:

all #uses# listed in Use Groups 11A;

From Use Group 12, as set forth in Section 32-21:

commercial art galleries, jewelry and art metal craft shops, as listed in Use Group 12B;

From Use Group 14, as set forth in Section 32-23:

bicycle rental or repair, and boat storage, repair, and painting, as listed in Use Group 14A;

From Use Group 16, as set forth in Section 32-25:

blacksmith shops; carpentry or custom woodworking, custom furniture making, building contractor supply stores, fuel, ice, oil, coal, wood sales, household and office equipment or machinery repair shops, machinery rental or sales establishments, mirror silvering or glass cutting shops, and tool, die, and pattern making shops as listed in Use Group 16A;

all #uses# listed in Use Group 16B, other than automotive service stations;

From Use Group 17, as set forth in Section 42-14:

food product manufacturing, as listed in Use Group 17B; and

From Use Group 18, as set forth in Section 42-15:

breweries and alcoholic beverage manufacturing.

139-14
Gowanus Retail and Entertainment Uses

For the purposes of applying the basic #floor area ratio# regulations of Section 139-21, the following #community facility# and #commercial uses# shall also be considered #Gowanus retail and entertainment uses#:

From Use Group 3, as set forth in Section 22-13:

non-commercial art galleries;

From Use Group 6, as set forth in Section 32-15:

all #uses# listed in Use Group 6A, 6C, and 6E;

From Use Group 8, as set forth in Section 32-17:

all #uses# listed in Use Group 8A;

From Use Group 10, as set forth in Section 32-19:

all #uses# listed in Use Group 10A;

From Use Group 12, as set forth in Section 32-21:

all #uses# listed in Use Groups 12A and 12B;

From Use Group 13, as set forth in Section 32-22:

all #uses# in Use Group 13A and 13B;

From Use Group 14, as set forth in Section 32-23:

bicycle sales; candy or ice cream stores; and non-commercial clubs without restrictions on activities or facilities except for any activity or #use# listed within the definitions of #adult physical culture establishments# in Section 12-10 (DEFINITIONS).

139-15
Supplementary Use Regulations

139-151
Location of commercial uses in mixed buildings

(a) Commercial Districts

In #Commercial Districts#, the underlying provisions of Section 32-422 (Location of floors occupied by commercial uses) shall be modified, for #mixed buildings# that are #developed# or #enlarged# after [date of adoption], to permit #dwelling units# on the same #story# as a #commercial use#, provided no access exists between such #uses# at any level containing #dwelling units# and provided no #commercial uses# are located directly over any #dwelling units#. However, such #commercial uses# may be located over #dwelling units# by authorization of the City Planning Commission upon a finding that sufficient separation of #residential uses# from #commercial uses# exists within the #building#.

(b) Mixed Use Districts

In #Mixed Use Districts#, the provisions of paragraph (c)(2) of Section 123-31 (Provisions Regulating Location of Uses in Mixed Use Buildings) shall be modified to allow #commercial# and #manufacturing uses# to be located over #dwelling units# by authorization of the City Planning Commission upon a finding that sufficient separation of #residential uses# from such #uses# exists within the #building#.

139-152
Enclosure of uses

In #Manufacturing Districts#, the underlying regulations of Section 42-40 (SUPPLEMENTARY USE REGULATIONS AND SPECIAL PROVISIONS APPLYING ALONG DISTRICT BOUNDARIES) shall apply, except that all storage of materials or products shall be located within #completely enclosed buildings# regardless of distance from a #Residence District#.

139-16
Special Sign Regulations

In the #Special Gowanus Mixed Use District#, the underlying #sign# regulations shall apply, except that:

(a) in #Manufacturing Districts#, the #sign# regulations of a C6-1 District, as set forth in Section 32-60, shall apply;

(b) any #accessory signs# that are provided adjacent to a #shore public walkway# shall be governed by the provisions of Section 139-55 (Special Signage Regulations).

139-17
Transient Hotels

In all districts, the #development# of a #transient hotel#; a change of #use# or #conversion# to a #transient hotel#, or an #enlargement#, containing a #transient hotel#, of a #building# that, as of [date of adoption], did not contain such #use#; or an #enlargement# or #extension# of a #transient hotel# that existed prior to [date of adoption] that increases the #floor area# of such #use# by 20 percent or more, shall be permitted only by special permit of the City Planning Commission pursuant to the provisions of this Section.

In order to permit such a #transient hotel#, the Commission shall find that such #transient hotel# is so located as not to impair the essential character of, or the future use or development of, the surrounding area.

Any #transient hotel# existing prior to [date of adoption] shall be considered a conforming #use# and may be continued, structurally altered, #extended# or #enlarged# subject to the limitations set forth in this Section, and subject to the applicable district #bulk# regulations. However, if for a continuous period of two years such #transient hotel# is discontinued, or the active operation of substantially all the #uses# in the #building or other structure# is discontinued, the space allocated to such #transient hotel# shall thereafter be used only for a conforming #use#, or may be #used# for a #transient hotel# only if the Commission grants a special permit for such #use# in accordance with the provisions of this Section. In addition, in the event a casualty damages or destroys a #transient hotel#, that was in such #use# as of [date of adoption], such #building# may be reconstructed and used as a #transient hotel# without obtaining a special permit. A #non-complying building# may be reconstructed pursuant to Section 54-40 (DAMAGE OR DESTRUCTION IN NON-COMPLYING BUILDINGS).

The Commission may prescribe appropriate conditions and safeguards to minimize adverse effects on the character of the surrounding area.

139-20
SPECIAL BULK REGULATIONS

In Subdistricts A, B, C and D, the #bulk# regulations of the applicable underlying districts shall be modified by the provisions of this Section, inclusive. In Subdistrict E, the underlying regulations shall apply.

In Subdistrict A, the provisions of Section 34-112 (Residential bulk regulations in other C1 or C2 Districts or in C3, C4, C5 or C6 Districts) and paragraph (b) of Section 35-23 (Residential Bulk Regulations in Other C1 or C2 Districts or in C3, C4, C5, or C6 Districts) shall be modified so that, in C4-4D Districts, the applicable #Residence District# shall be an R9A District, as modified by the provisions of this Chapter.

139-21
Floor Area Regulations

Basic #floor area# regulations are established in Section 139-211. Such regulations may be modified by the provisions of this Section, inclusive.

The basic maximum #floor area ratios# may be increased for certain #zoning lots# pursuant to Sections 139-212 (Gowanus mix) and 139-213 (Special floor area provisions for transit improvements).

Special regulations for #community facility floor area# on #zoning lots# containing #schools# are set forth in Section 139-214 (Special provisions for zoning lots containing schools).

Special regulations for certain #zoning lots# are set forth in Section 139-215 (Special floor area provisions for zoning lots containing comfort stations) and 139-216 (Special provisions for street improvements).

139-211
Basic floor area regulations

The maximum #floor area# regulations for each district in the #Special Gowanus Mixed Use District# shall be as set forth in the table in this Section.

Row A establishes the maximum #residential floor area ratio# for #MIH sites# where either #affordable floor area# is provided in accordance with the provisions of paragraphs (d)(3)(i) through (d)(3)(iv) or paragraph (d)(5) of Section 23-154 (Inclusionary Housing), or where a contribution to the #affordable housing fund# is made in accordance with paragraph (d)(3)(v) of such Section. For #zoning lots# subject to the provisions of paragraph (d)(4) of Section 23-154, the maximum #floor area ratio# shall be as set forth in Section 23-153 (For Quality Housing buildings)

Row B establishes a maximum #floor area ratio# for #community facility uses#, other than #select community facility uses#. Row C sets forth the maximum #floor area ratio# for #select community facility uses# only. In addition, special regulations for #schools# are set forth in Section 139-213.

Row D establishes a maximum #floor area ratio# for #Gowanus retail and entertainment uses# only.

Row E establishes a maximum #floor area ratio# for all #commercial uses#, inclusive of #Gowanus retail and entertainment uses#.

Row F sets forth the maximum #floor area ratio# for #manufacturing# uses.

Row G establishes the basic maximum #floor area ratio# permitted on the #zoning lot#. Such basic maximum #floor area ratio# may be increased, by the maximum amount set forth in Rows H, I, or J, pursuant to the provisions of Section 139-212 (Gowanus mix), or Section 139-215 (Special provisions for transit improvements). The total maximum #floor area ratio# is set forth in Row K.

MAXIMUM FLOOR AREA RATIO

		C4-4D	M1-4		M1-4 / R6B	M1-4 / R6A	M1-4 / R7A	M1-4 / R7-2	M1-4 / R7X
			Subarea B1	Subarea B2					
A	Maximum #FAR# for #residential uses# for #MIH Sites#	8.5	-	-	2.2	3.6	4.6	4.4	5.6
B	Maximum #FAR# for #community facility uses#	6.5	4.0	3.0	2.0	3.0	4.0	4.0	5.0
C	Maximum #FAR# for #select community facility uses#	6.5	4.8	4.8	2.0	3.0	4.0	4.0	5.0
D	Maximum #FAR# for #Gowanus retail and entertainment uses#	3.4	2.0	2.0	2.0	2.0	2.0	2.0	2.0
E	Maximum #FAR# for #commercial uses#	3.4	4.0	3.0	2.0	3.0	3.0	3.0	4.0
F	Maximum #FAR# for #manufacturing uses#	-	4.0	3.0	2.0	3.0	3.0	3.0	4.0
G	Basic Maximum #FAR#	8.5	4.8	4.8	2.2	3.6	4.6	4.4	5.6
H	Additional #FAR# for non-#residential# uses per Section 139-212(a)	-	-	-	-	-	-	0.3	0.2
I	Additional #FAR# for #Gowanus mix uses# per Section 139-212(b)	-	-	-	-	-	-	0.3	0.2
J	Additional #FAR# for transit improvements per Section 139-213	1.7	-	-	-	-	-	-	-
K	Total Maximum Floor Area Ratio	10.2	-	-	-	-	-	5.0	6.0

139-212
Gowanus mix

In M1 Districts paired with R7-2 or R7X Districts, the provisions of this Section may be utilized to increase the maximum #floor area ratio# from the basic maximum to the total maximum set forth Section 139-211 (Basic floor area regulations).

(a) Inclusion of non-residential uses

For #zoning lots# with #buildings# containing both #residential uses# and any non-#residential use#, the maximum #floor area ratio# may be increased by 0.2 #floor area ratio# in M1 Districts paired with R7X Districts, or 0.3 #floor area ratio# in M1 Districts paired with R7-2 Districts.

(b) Inclusion of #Gowanus mix uses#

For #zoning lots# with #buildings# containing both #residential uses# and #Gowanus mix uses#, the maximum #floor area ratio# may be increased by 0.2 #floor area ratio# in M1 Districts paired with R7X Districts, or 0.3 #floor area ratio# in M1 Districts paired with R7-2 Districts.

The provisions of both paragraphs (a) and (b) of this Section may be utilized, as applicable, so that the total maximum #floor area ratio# of the #zoning lot# is increased to the total listed in Row K of the table in Section 139-211.

The amount of #floor area# allocated to such a #use# must be equal to or greater than the amount of #floor area# by which the maximum #floor area ratio# is being increased, and #floor area# provided to satisfy the requirements of one paragraph of this Section may not be utilized to satisfy the requirements of the other. However, #Gowanus mix uses# in excess of the #floor area ratio# listed in row I may be used to satisfy the requirements of paragraph (a) above.

In addition, #floor area# provided to satisfy the requirements of Section 139-41 (Ground Floor Level Requirements) may not be utilized to satisfy the requirements of this Section.

139-213
Special floor area provisions for transit improvements

In #Commercial Districts#, the #floor area ratios# established in the table in Section 139-211 may be increased by up to 20 percent, pursuant to the provisions of Section 139-472 (Transit improvement bonus). Where the #residential floor area ratio# is increased, such additional #floor area# shall be exempt from the requirements of paragaraph (d) of Section 23-154.

139-214
Special floor area provisions for zoning lots containing schools

The provisions of this Section shall apply to #zoning lots# with a #lot area# greater than 30,000 square feet, and which contain #schools# constructed in whole or in part pursuant to an agreement with the New York City School Construction Authority and subject to the jurisdiction of the New York City Department of Education.

On such #zoning lots#, up to 60,000 square feet of floor space within such #school# or, in Subarea D4 up to 100,000 square feet of floor space within such #school#, shall be exempt from the definition of #floor area#.

139-215
Special floor area provisions for zoning lots containing comfort stations

For #zoning lots# containing a comfort station provided in accordance with the provisions of paragraph (c)(2) of Section 139-51 (Area-Wide Modifications), an area equal to 200 percent of the floor space within such comfort station may be exempted from the definition of #floor area#.

139-216
Special floor area provisions for street improvements

In Subareas D4, D5, and D6, for #zoning lots# containing mapped #streets#, where such mapped #streets# will be improved and opened to the public, the provisions of this Section may apply.

(a) Street area

The #lot area# of a #zoning lot# adjacent to newly-improved #street# may be considered to be increased by an amount equal to the area contained within the bed of such #street#, as measured from the centerline of such #street# to the #street line# adjoining the #zoning lot#.

(b) Transfer of #floor area#

#Residential floor area# may be transferred from a granting site to a receiving site located directly across the newly-improved #street#, provided that:

(1) the owners of the granting site and the receiving site shall jointly notify the Department of City Planning, in writing, of their intent to transfer #residential floor area#. Such notification shall include a site plan showing the conditions and #floor area# calculations for the granting site and the receiving site, before and after the transfer;

(2) no building permit shall be issued by the Department of Buildings for a #building# on a receiving site containing any such transferred #residential floor area# until the Chairperson of the City Planning Commission has certified to the Department of Buildings that plans submitted to the Department of City Planning comply with the requirements of this Section; and

(3) no certificate of occupancy shall be issued by the Department of Buildings for any portion of a #building# utilizing the transferred #residential floor area# until the

Chairperson of the City Planning Commission certifies to the Department of Buildings that such #building# has been constructed in accordance with the plan certified by the Chairperson pursuant to paragraph (b)(2) of this Section.

Notices of restrictions shall be filed by the owners of the granting site and the receiving site in the Office of the Register of the City of New York, indexed against the granting site and the receiving site(s), certified copies of which shall be submitted to the Department of City Planning. Notice by the Department of City Planning of its receipt of certified copies thereof shall be a condition to issuance of a building permit for a #building# on the receiving site containing any such transferred #residential floor area#.

The transfer of #residential floor area#, once completed, shall irrevocably reduce the maximum #residential floor area# permitted on the granting site. Any #building# on a receiving site that uses the #residential floor area# so transferred shall comply with all other applicable #bulk# regulations of this Chapter.

139-22
Special Yard Regulations

The underlying #yard# and #rear yard equivalent# regulations shall apply, as modified by the provisions of this Section, inclusive.

139-221
Permitted obstructions in required yards

In all #Commercial#, #Manufacturing#, and #Mixed Use Districts#, the permitted obstruction provisions of paragraph (b)(3) of Section 33-23 and paragraph (b)(1) of Section 43-23 shall be modified such that, in any #rear yard#, any #building# or portion of a #building# used for any permitted non-#residential use# (except any #building# portion containing rooms used for living or sleeping purposes) shall be a permitted obstruction, provided that the height of such #building#, or portion thereof, shall not exceed two #stories#, excluding #basements#, nor in any event 30 feet above #curb level#.

139-222
Rear yards and rear yard equivalents

In all #Manufacturing Districts#, the provisions of 43-26 (Minimum Required Rear Yards) and 43-261 (Beyond one hundred feet of a street line) shall not apply. In lieu thereof, a #rear yard# shall be provided at the minimum depth set forth in the table below for the applicable height above the #base plane#, at every #rear lot line# on any #zoning lot#.

Height above #base plane#	Required depth
Below 65 feet	10
Above 65 feet and below 125 feet	15
Above 125 feet	20

In addition, in all #Manufacturing# and #Mixed Use Districts#, the provisions of Section 43-28 (Special Provisions for Through Lots) shall be modified such that no #rear yard equivalent# shall be required on any #through lot# or #through lot# portion of a #zoning lot#.

139-223
Required yards along district boundaries

In #Manufacturing# and #Mixed Use Districts#, the provisions of Section 43-304 (Required front yards along district boundary located in a street) shall not apply.

In #Commercial#, #Manufacturing#, and #Mixed Use Distrcts#, the underlying yard requirements applying along district boundaries of Sections 33-292 (Required yards along district boundary coincident with rear lot lines of two adjoining zoning lots), 33-293 (Required yards along district boundary coincident with side lot line of zoning lot in a Commercial District), 43-302 (Required yards along district boundary coincident with rear lot lines of two adjoining zoning lots) and 43-303 (Required yards along district boundary coincident with side lot line of zoning lot in a Manufacturing District), shall be superceded by the provisions of this Section as follows:

(a) When #side# or #rear lot lines# coincide with a #side lot line# of a #zoning lot# in an adjoining #Residence District#, an open area not higher than #curb level#, and at least eight feet in depth, shall be provided; and

(b) Where #side# or #rear lot lines# coincide with the #rear lot line# of a #zoning lot# in an adjoining #Residence District#, an open area not higher than 30 feet above #base plane# and at least 20 feet in depth, shall be provided.

139-224
Waterfront yards

The provisions of Section 62-33 (Special Yard Regulations on Waterfront Blocks) shall be modified such that a #waterfront yard# shall be provided in accordance with the provisions of Section 62-332 (Rear yards and waterfront yards) on all #waterfront zoning lots#, as that term is defined in Section 62-11, regardless of #use#.

The depth of the #waterfront yard# shall be measured from the #zoning lot line# adjoining the Gowanus Canal, or where the provisions of paragraph (f) of Section 139-51 (Area-Wide

Modifications) are utilized, from the bulkhead. The depth of the #waterfront yard# may be reduced as set forth in Section 62-332 and paragraph (c) of Section 139-544 (Special design standards for planting).

139-23
Special Height and Setback Regulations

The height and setback regulations of the applicable underlying districts are modified as follows:

(a) In #Commercial Districts#, the height and setback regulations of Section 35-60 (MODIFICATION OF HEIGHT AND SETBACK REGULATIONS) shall apply to all #buildings#, as modified by the provisions of this Section, inclusive.

(b) In #Mixed Use Districts#, the height and setback regulations of Section 123-60 (SPECIAL BULK REGULATIONS) shall apply, as modified by the provisions of this Section, inclusive.

(c) In #Manufacturing Districts#, the underlying height and setback regulations of Sections 43-43 (Maximum Height of Front Wall and Required Front Setbacks), 43-44 (Alternate Front Setbacks), and 43-45 (Tower Regulations) shall not apply. In lieu thereof, minimum and maximum base heights and maximum heights for #buildings or other structures# shall be as set forth in this Section, inclusive. The other underlying regulations of Article IV, Chapter 3 (Bulk Regulations) shall apply, as modified by the provisions of this Section, inclusive.

(d) The special #bulk# regulations applicable in the #waterfront area# of Section 62-30 (SPECIAL BULK REGULATIONS) shall not apply. In lieu thereof, the height and setback regulations of this Section, inclusive, shall control.

The height of all #buildings or other structures# shall be measured from the #base plane#.

139-231
General provisions

For the purposes of applying the applicable #bulk# regulations, the boundaries of #waterfront public access areas#, as well as #lot lines# abutting #public parks#, shall be considered #narrow street lines#.

Where a continuous sidewalk widening is provided along the entire frontage of a #zoning lot#, the interior boundary of such widening shall be considered a #street line# for the purpose of applying the height and setback regulations of this Chapter, except that where a sidewalk widening is provided pursuant to Section 139-43 (Sidewalk Widening Requirements), any setback required by this Section may be reduced by one foot for each foot by which the sidewalk is widened, provided that no setback shall be less than seven feet in depth.

Where a provision of this Chapter allows a modification to the maximum #building# height, and multiple modifications apply to a #building#, such modifications shall be applied cumulatively.

139-232
Permitted obstructions

In all districts, the underlying permitted obstruction regulations shall be modified by this Section.

(a) Solar energy systems

The underlying permitted obstruction regulations shall be modified to permit solar energy systems as a permitted obstruction up to a #lot coverage# of 100 percent of the #lot coverage# of the roof.

(b) Balconies

Unenclosed balconies complying with the provisions of Section 23-132 (Balconies in R6 through R10 Districts) may encroach into any required open area on the #zoning lot#. However, balconies that encroach into #waterfront public access areas# shall be regulated by the provisions of Section 139-51(a)(1).

(c) Dormers

Above the maximum base height, dormers shall be permitted to encroach into a required setback area, except setback areas adjoining tower portions of #buildings# and setback areas facing #waterfront public access areas#, provided that:

(1) The aggregate width of all dormers does not exceed 50 percent of the width of the #street wall# of the highest #story# entirely below the maximum base height;

(2) The aggregate width of all dormers with a depth exceeding seven feet does not exceed 30 percent of the width of the #street wall# of the highest #story# entirely below the maximum base height, and do not exceed a height of 75 percent of the total height of the #building#.

Such dormers need not decrease in width as the height above the maximum base height increases.

139-233
Special height and setback regulations in Subdistrict A

In Subdistrict A, the underlying district regulations shall be modified by the provisions of this Section.

(a) Street wall location

The #street wall# location requirements of paragraph (b) of Section 35-651 (Street wall location) shall apply to all #buildings#.

(b) Base heights and setback requirements

The maximum height of #buildings or other structures# shall be as set forth in Sections 35-652 (Maximum height of buildings and setback regulations) or 35-654 (Modified height and setback regulations for certain Inclusionary Housing buildings or affordable independent residences for seniors), as applicable.

In addition, for all #non-residential buildings#, the provisions of paragraph (b)(1) of Section 35-652 shall be modified such that the minimum and maximum base height, maximum #building# height, and maximum number of #stories# for #Quality Housing buildings# with #qualifying ground floors# shall be as set forth in paragraph (b) of Section 23-664 (Modified height and setback regulations for certain Inclusionary Housing buildings or affordable independent residences for seniors).

139-234
Special height and setback regulations in Subdistrict B

In Subdistrict B, the underlying district regulations shall be modified by the provisions of this Section.

(a) Street wall location

In #Manufacturing Districts#, 30 percent of the #street wall# shall be located within eight feet of the #street line# and shall extend to at least the minimum #base height# specified in paragraph (b) of this Section, or the height of the #building#, whichever is lower.

In #Mixed Use Districts#, at least 70 percent of the #aggregate width of street walls# shall be located within eight feet of the #street line# and extend to at least the minimum #base height# specified in paragraph (b) of this Section or the height of the #building#, whichever is lower. Up to 30 percent of the #aggregate width of street walls# may be recessed beyond eight feet of the #street line#, provided that any such recesses deeper than 10 feet along a #wide street# or 15 feet along a #narrow street# are located within an outer court.

(b) Minimum and maximum base heights

In all districts, #street walls# shall rise without setback to a minimum base height set forth in this paragraph (b) or the height of the #building#, whichever is less, and may rise

to a maximum base height as set forth in this paragraph (b). In #Manufacturing Districts#, minimum and maximum base heights and maximum heights of #buildings or other structures# shall be as set forth in Table 1 below. In #Mixed Use Districts#, such regulations shall be as set forth in Table 2.

Table 1
MINIMUM BASE HEIGHT, MAXIMUM BASE HEIGHT, AND MAXIMUM BUILDING HEIGHT – FOR M1-4 DISTRICTS
(in feet)

	Minimum base height	Maximum base height	Maximum #building# height
in Subarea B1	15	95	115
in Subarea B2	15	65	85

Table 2
MINIMUM BASE HEIGHT, MAXIMUM BASE HEIGHT, AND MAXIMUM BUILDING HEIGHT – FOR MIXED USE DISTRICTS
(in feet)

	Minimum base height	Maximum base height	Maximum #building# height
M1-4/R6B	30	45	55
M1-4/R6A	40	65	85
M1-4/R7A	40	75	95
M1-4/R7X	60	105	145

However, for #zoning lots# with a #lot area# greater than or equal to 20,000 square feet, and located in a #Manufacturing District#, a #building# containing non-#residential uses# may exceed the maximum #building# heights established in Table 1 and 2, as applicable, by 30 feet.

(c) Setback requirements

At a height not lower than the minimum base height or higher than the maximum base height, a setback shall be provided which complies with the requirements of paragraph (c) of Section 23-662.

139-235
Special height and setback regulations in Subdistrict C

(a) Street wall location

At least 70 percent of the #aggregate width of street walls# shall be located within eight feet of the #street line# and shall extend to at least the minimum base height specified in

paragraph (b) of this Section, or the height of the #building#, whichever is lower. Up to 30 percent of the #aggregate width of street walls# may be recessed beyond eight feet of the #street line#, provided that any such recesses deeper than 10 feet along a #wide street# or 15 feet along a #narrow street# are located within an outer court. However, no #street wall# location requirement shall apply to the #street walls# facing a #shore public walkway#.

(b) Minimum and maximum base heights

Except as otherwise specified in this paragraph (b), #street walls# shall rise without setback to a minimum base height of 40 feet or the height of the #building#, whichever is less, and may rise to a maximum base height as set forth in this paragraph (b). However, no minimum base height shall be required for #street walls# facing a #shore public walkway#.

(1) Along Bond Street, the minimum base height shall be 30 feet, and the maximum base height shall be 55 feet. No portion of a #building# located within 65 feet of Bond Street may rise above a height of 65 feet.

(2) Along Union Street, between Nevins Street and the Gowanus Canal, the maximum base height shall be 85 feet.

(3) Along Degraw Street, between Nevins Street and the Gowanus Canal, the maximum base height shall be 85 feet.

(4) Along all other #streets#, as well as along the Gowanus Canal, the maximum base height shall be 65 feet.

(c) Setback requirements

At a height not lower than the minimum base height or higher than the maximum base height, a setback with a minimum depth of 15 feet shall be provided. Such setback shall also comply with the requirements of paragraph (c) of Section 23-662.

(d) Tower regulations

(1) Tower location

Any portion of a #building# located above a height of 85 feet shall be considered a “tower”. No portion of a tower may be located:

(i) within 30 feet of the #street line# of Nevins Street;

(ii) within 65 feet of Bond Street; or

(iii) within 30 feet of a #waterfront yard#.

(2) Tower width

The #street wall# of any tower facing a #shore public walkway# shall not exceed 100 feet in width. Where multiple towers are provided, the combined #street wall# width of all such towers shall not exceed 130 feet.

However, for #zoning lots# located south of Carroll Street, the combined #street wall# width of all such towers shall not exceed 150 feet.

(3) Tower coverage

Above a height of 175 feet, any tower shall set back such that it occupies a #lot coverage# no greater than 80 percent of the #story# located immediately below.

(4) Tower height

The maximum height of a tower shall be 225 feet.

(5) Regulations for multiple towers

Wherever two towers are provided on the same #zoning lot#, there shall be a difference in height between such towers of at least 50 feet. The taller of the two towers shall be located north of the mid-#block# line of the #block#.

However, for #zoning lots# located south of Carroll Street, the taller of the two towers shall be located within 150 feet of the Gowanus Canal. The shorter of the two towers shall be located beyond 150 feet of the Gowanus Canal, and no less than 65 feet from Carroll Street.

139-236
Special height and setback regulations in Subdistrict D

(a) Street wall location

At least 70 percent of the #aggregate width of street walls# shall be located within eight feet of the #street line# and extend to at least the minimum #base height# specified in paragraph (b) of this Section, or the height of the #building#, whichever is lower. Up to 30 percent of the #aggregate width of street walls# may be recessed beyond eight feet of the #street line#, provided that any such recesses deeper than 10 feet along a #wide street# or 15 feet along a #narrow street# are located within an outer court. However, no #street wall# location requirement shall apply to the #street walls# facing a #shore public walkway#.

(b) Minimum and maximum base heights

For #zoning lots# in Subareas D1 through D6, #street walls# shall rise without setback to a minimum base height of 40 feet or the height of the #building#, whichever is less, and

may rise to a maximum base height as set forth in the map in this paragraph (b). However, this requirement shall not apply to the #aggregate width of street walls# facing a #shore public walkway#.

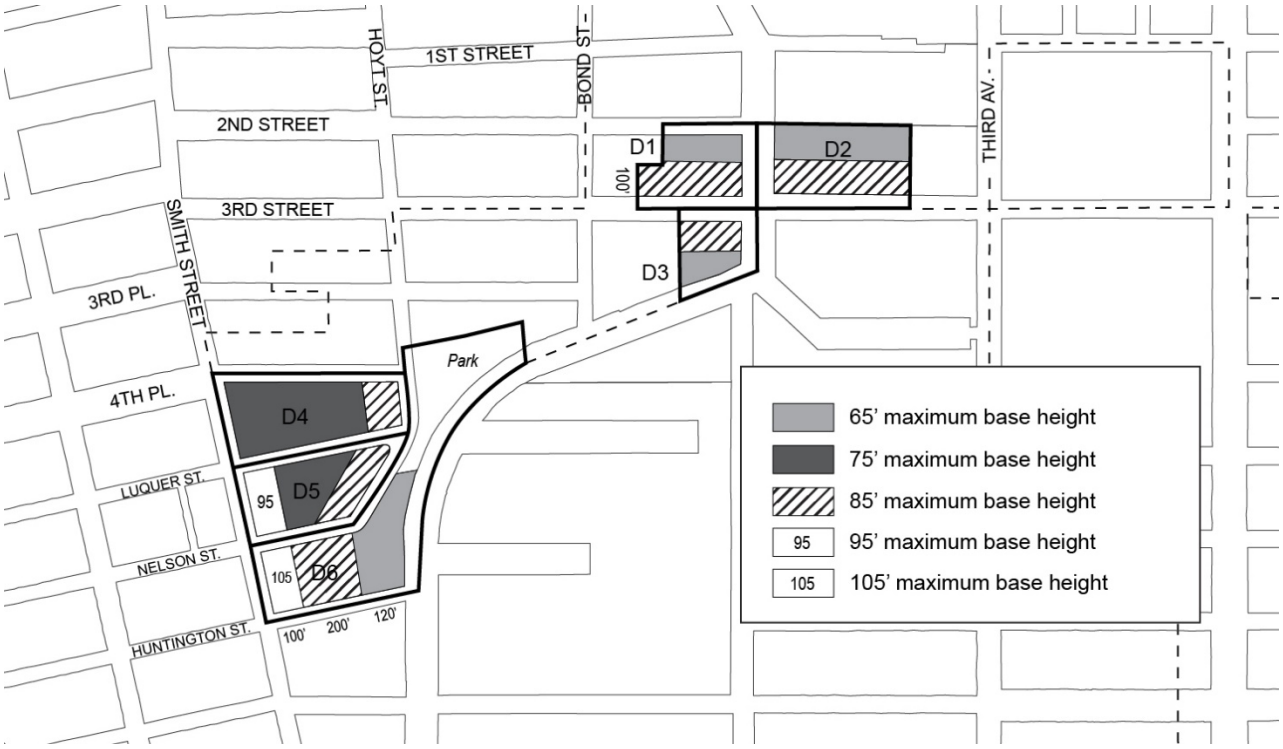

(c) Setback requirements

At a height not lower than the minimum base height or higher than the maximum base height, setbacks shall be provided with a minimum depth as set forth in the map in this paragraph (c).

Such setbacks shall also comply with the provisions of paragraph (c) of Section 23-662 (Maximum height of buildings and setback regulations).

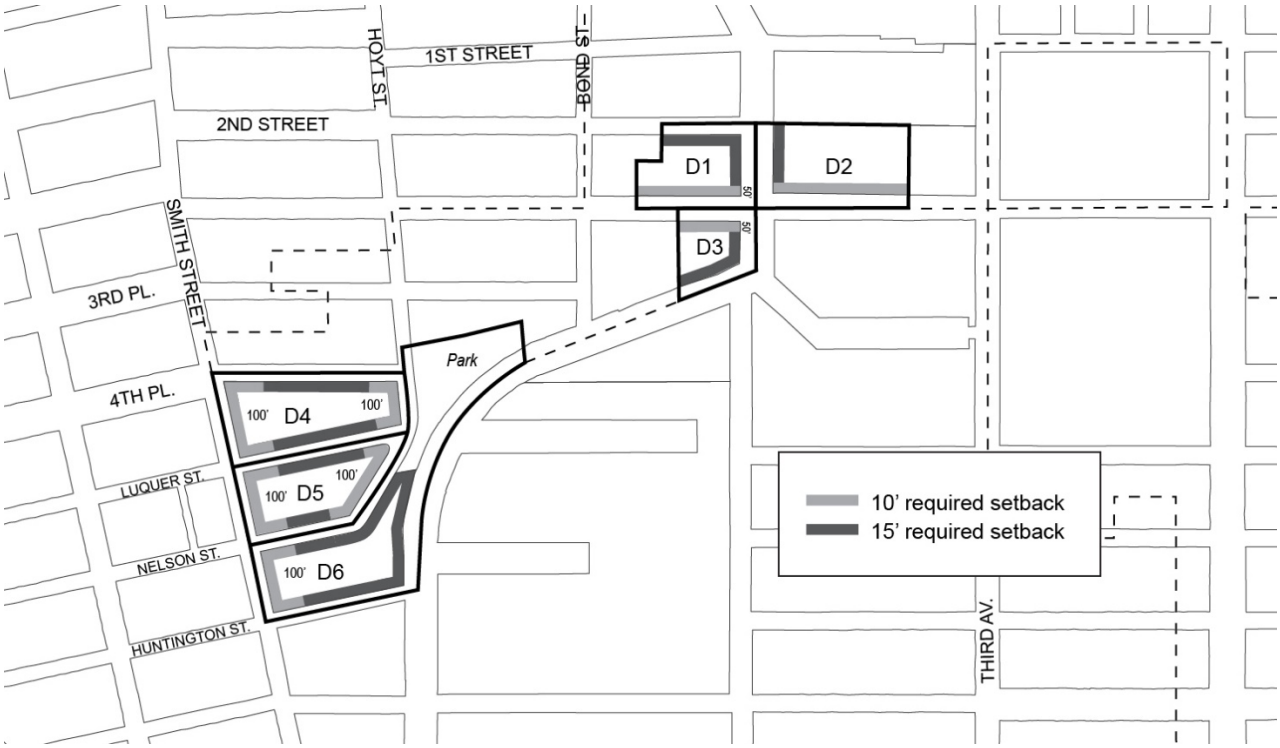

(d) Transition heights

Any portion of a #building# located above the setback required by paragraph (c) of this Section shall be permitted to rise to a maximum "transition height" as set forth in this paragraph (d). Any portion of a #building# located above the maximum transition height shall be considered a "tower" and shall comply with the provisions of paragraph (e) of this Section. Except as otherwise set forth in the map in this paragraph (d), such maximum transition height shall be 85 feet.

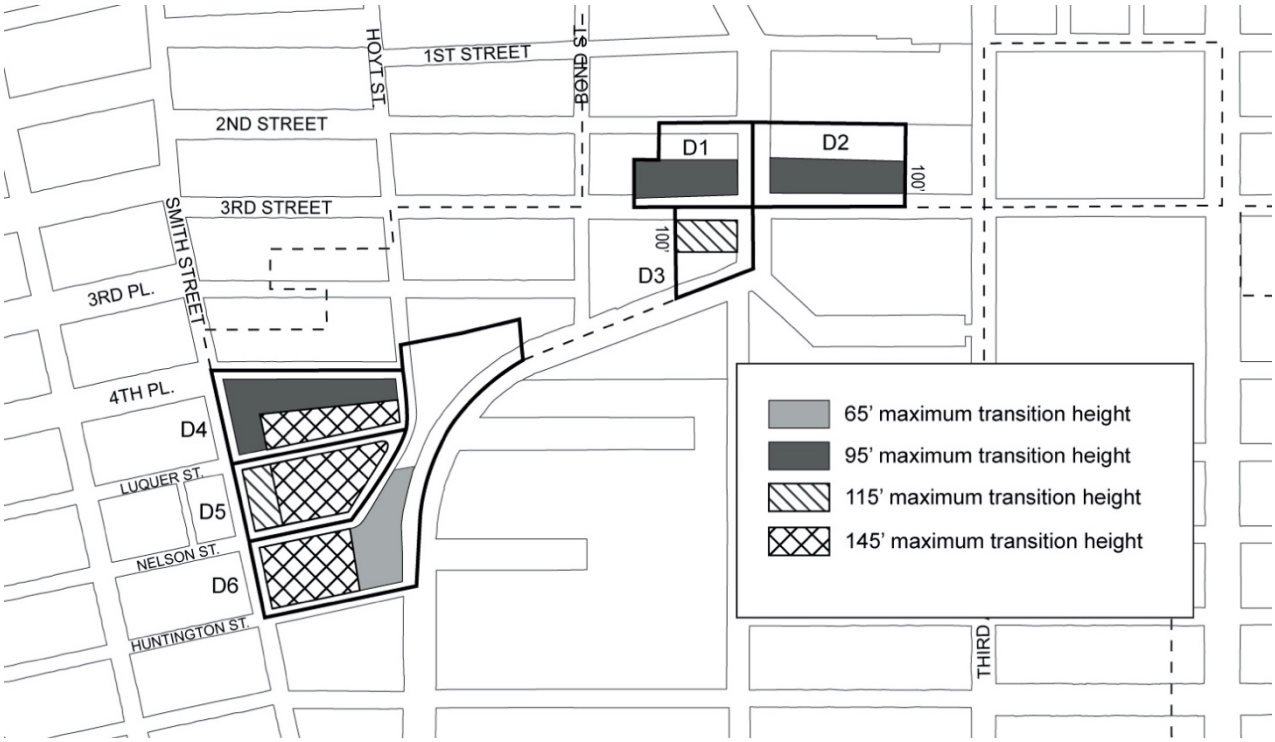

(e) Tower regulations

(1) Tower location

Any portion of a #building# located above the maximum transition height set forth in paragraph (d) shall be considered a "tower". No portion of a tower may be located:

(i) in Subarea D4, within 150 feet of Smith Street or within 150 feet of Hoyt Street;

(ii) in Subarea D5, within 80 feet of Smith Street or within 200 feet of Smith Street north of the mid-#block# line; or

(iii) within 30 feet of a #waterfront yard#.

(2) Tower width

The #street wall# of any tower facing a #shore public walkway# shall not exceed 100 feet in width. Where multiple towers are provided, the combined #street wall# width of all such towers shall not exceed 130 feet.

However, in Subarea D4, where multiple towers are provided, the combined #street wall# width of all such towers shall not exceed 170 feet.

(3) Tower coverage

In Subareas D1, D2, and D3, above a height of 175 feet, any tower shall set back such that it occupies a #lot coverage# no greater than 80 percent of the #story# located immediately below.

In Subareas D5 and D6, the portion of any tower containting the top four #stories# of such tower shall set back such that it occupies a # lot coverage# no greater than 80 percent of the #story# located immediately below.

(4) Tower height

Except as otherwise specified in this paragraph (e)(4), the maximum height of a tower shall be 225 feet.

(i) In Subarea D4, towers shall be permitted to rise to a height of 285 feet.

(ii) In Subarea D5, towers shall be permitted to rise to a height of 245 feet.

(iii) In Subarea D6, towers shall be permitted to rise to a height of 305 feet.

(5) Regulations for multiple towers

(i) In Subareas D1 and D2, no more than two towers shall be permitted on a #zoning lot#.

(ii) In Subareas D4 and D5, no more than two towers shall be permitted in each subarea.

(iii) In Subareas D3 and D6, no more than one tower shall be permitted in the subarea.

(iv) Wherever two towers are provided on the same #zoning lot#, there shall be a difference in height between such towers of at least 50 feet.

In addition, in Subarea D1, the taller of the two towers shall be located within 100 feet of Third Street.

139-237
Special street wall articulation requirements

In all subdistricts, for #street walls# with widths exceeding 200 feet, a minimum of 20 percent and no more than 50 percent of the surface area of such #street walls# above the level of the second #story#, or a height of 30 feet, whichever is lower, shall either recess or project a minimum of three feet from the remaining surface of the #street wall#. Any such recess or

projection shall be considered a permitted obstruction into a required setback, and the depth of such recess or projection shall not exceed three feet.

In addition, in Subdistrict D, the underlying dormer provisions of paragraph (c) of Section 23-621 shall be modified for portions of #buildings# facing Third Street, so that above the maximum base height, dormers shall be permitted only within 75 feet of the intersection of two #streets#.

139-238
Special height regulations for zoning lots containing schools

In Subdistrict C, and in Subareas D1, D2, and D3, for #zoning lots# containing #schools# regulated by Section 139-213 (Special provisions for zoning lots containing schools), the maximum tower height specified by the regulations in this Section, inclusive, may be increased as-of-right by 40 feet. This allowance may be further modified by the provisions of Section 139-47 (Authorization for sites containing schools).

139-30
SPECIAL PARKING REGULATIONS

In Subdistricts A, B, C, and D, the underlying parking and loading regulations shall be modified by the provisions of this Section. On #waterfront blocks#, the provisions of Section 62-40 shall not apply. In Subdistrict E, the underlying regulations shall apply.

139-31
Special Accessory Off-Street Parking Regulations

139-311
Reduction of parking requirements for residences

In all districts, for the purposes of applying the provisions of Sections 36-33 and 123-72, the provisions of Section 25-23 shall be modified to require that #accessory# off-street parking spaces be provided for at least 20 percent of #residences# on a #zoning lot#.

For the purposes of applying waivers, the provisions of of Section 25-26 shall be modified so that the maximum number of #accessory# off-street parking spaces for which requirements are waived is 20 spaces.

Notwithstanding the above, in Subarea D4, and in Subarea D5 north of the mid-#block# line, no #accessory# off-street parking spaces for #residences# shall be required.

139-312
Elimination of parking requirements for non-residential uses

In all districts, no #accessory# off-street parking spaces shall be required for #manufacturing#, #commercial#, or #community facility uses#.

139-313
Off-site parking facilities

For #residences# in #Commercial# and #Mixed Use Districts#, the provisions of Sections 25-51 and 36-42 (Off-site Spaces for Residences) shall be modified to allow the #zoning lot# containing required #accessory# off-street parking spaces for #residences# to be located in any zoning district, as well as anywhere within the #Special Gowanus Mixed Use District#.

139-314
Joint facilities

For #residences# in #Commercial# and #Mixed Use Districts#, the provisions of Sections 25-541 and 36-441 (Joint facilities) shall not apply. In lieu thereof, the provisions of this Section shall apply.

Required #accessory# off-street parking spaces may be provided in facilities designed to serve jointly two or more #buildings# or #zoning lots#, provided that the number of spaces in such joint facilities shall be not less than that required for the combined number of #dwelling units# in such #buildings# or #zoning lots#, and provided that the design and layout of such joint facilities meets the standards of adequacy set forth in regulations promulgated by the Commissioner of Buildings.

139-315
Use of parking facilities for car sharing vehicles

The underlying regulations regarding the occupation of #accessory# or required off-street parking spaces by #car sharing vehicles# shall modified so that, in all districts, the number of spaces occupied by #car sharing vehicles# shall not exceed 20 percent of all spaces in a #group parking facility#.

139-316

Use of parking facilities for public parking

All #accessory# off-street parking spaces may be made available for public use. However, parking spaces #accessory# to #residences# shall be made available to the occupant of a #residence# to which it is #accessory# within 30 days after written request is made to the landlord.

139-32
Special Permitted Off-Street Parking Regulations

For portions of an #automated parking facility#, as that term is defined in Section 13-02, each tray upon which a vehicle is stored shall be considered one parking space, regardless of its size. In addition, at a height in excess of 23 feet above #curb level# each parking tray shall be considered #floor area# in an amount of 153 square feet or the size of such lifted tray, whichever is greater.

139-33
Special Loading Regulations

In all districts, the loading regulations of an M1-5 District shall apply, and shall be further modified as follows:

(a) the requirements of Section 44-50 (GENERAL PURPOSES), inclusive, shall not apply to changes of #uses#;

(b) the provisions of Section 44-53 (Special Provisions for a Single Zoning Lot With Uses Subject to Different Loading Requirements), and Sections 36-64 and 44-54 (Wholesale, Manufacturing, or Storage Uses Combined With Other Uses), shall not apply; and

(c) the minimum length requirements for loading berths #accessory# to #commercial uses#, other than funeral establishments, set forth in Section 44-581 (Size of required loading berths) shall be increased to 37 feet.

139-34
Special Curb Cut Regulations

For #zoning lots# existing on or after [date of adoption], with frontage along both a #primary street frontage# and a #secondary street frontage#, as set forth in Section 139-41 (Ground Floor Level Requirements), curb cuts accessing off-street parking spaces and loading berths shall not be permitted along the #primary street frontage#. In addition, no curb cut shall be permitted within 40 feet of a #waterfront public access area#.

Curb cuts prohibited by this Section may be authorized by the City Planning Commission provided the Commission finds that a curb cut at such a location:

(a) is not hazardous to traffic safety;

(b) will not create or contribute to serious traffic congestion, or unduly inhibit vehicular movement;

(c) will not adversely affect pedestrian movement;

(d) will not interfere with the efficient functioning of bus lanes, specially designated streets or public transit facilities; and

(e) will not be inconsistent with the character of the existing streetscape.

The Commission may prescribe appropriate conditions and safeguards to minimize adverse effects on the character of the surrounding area.

139-40
DISTRICT PLAN ELEMENTS

In all Subdistricts, the provisions of this Section shall apply to all #zoning lots#, as specified below.

139-41
Ground Floor Level Requirements

For the purposes of applying the special #ground floor level# streetscape provisions set forth in Section 37-30 to this Chapter, the portion of a #ground floor level street# frontage considered a #primary street frontage# shall be as shown on Map 3 (Ground Floor Use Requirements) in Appendix A of this Chapter. A #ground floor level street# frontage along any other #street# shall be considered a #secondary street frontage#.

The provisions of this Section shall apply to #developments# or #ground floor level enlargements#.

(a) Along #primary street frontages#

(1) Type 1 #primary street frontages#

For #buildings#, or portions thereof, with Type 1 #primary street frontage#, #uses# on the #ground floor level#, to the minimum depth set forth in Section 37-32 (Ground Floor Depth Requirements for Certain Uses), shall be limited to #Gowanus retail and entertainment uses#, except for Type 1 lobbies and entrances

and exits to #accessory# parking spaces provided in accordance with the applicable provisions of Section 37-33 (Maximum Width of Certain Uses). Group parking facilities located on the #ground floor level# shall be wrapped by #floor area# in accordance with the provisions of paragraph (a) of Section 37-35 (Parking Wrap and Screening Requirements). #Ground floor level street walls# shall be glazed in accordance with the provisions set forth in Section 37-34 (Minimum Transparency Requirements).

(2) Type 2 #primary street frontages#

For #buildings#, or portions thereof, with Type 2 #primary street frontage#, #uses# on the #ground floor level#, to the minimum depth set forth in Section 37-32, shall be limited to non-#residential uses#, except for Type 1 lobbies and entrances and exits to #accessory# parking spaces provided in accordance with the applicable provisions of Section 37-33. Group parking facilities located on the #ground floor level# shall be wrapped by #floor area# in accordance with the provisions of paragraph (a) of Section 37-35. #Ground floor level street walls# shall be glazed in accordance with the provisions set forth in Section 37-34.

(b) Along #secondary street frontages#

For #buildings#, or portions thereof, with #secondary street frontage#, all #uses# permitted by the underlying district shall be permitted on the #ground floor level#, provided that any off-street parking spaces on the #ground floor level# shall be wrapped or screened in accordance with Section 37-35. Entrances and exits to accessory parking facilities shall be subject to the provisions of paragraph (b) of Section 37-33.

(c) For blank walls

In all districts, any #street wall# width exceeding 50 feet with no transparent elements on the #ground floor level# shall provide visual mitigation elements in accordance with the provisions of Section 139-411 (Special streetscape provisions for blank walls).

[Note: the following provisions would be relocated to 37-36 upon adoption of Zoning for Coastal Flood Resiliency]

139-411
Special streetscape provisions for blank walls

Where visual mitigation elements are required on a blank wall along the #ground floor level street wall# pursuant to the provisions of Section 139-41(c) (Ground Floor Level Requirements), at least 75 percent of the linear footage of any such blank wall shall be treated by one or more of the following visual mitigation elements which shall be provided on the #zoning lot#, except where such elements are permitted within the #street# under other applicable laws or regulations. Such features, when utilized as visual mitigation elements, shall include:

(a) Planting

Any combination of perennials, annuals, decorative grasses or shrubs shall be provided in planting beds, raised planting beds or planter boxes in front of the #street wall#. Each foot in width of a planting bed, raised planting bed or planter box, as measured parallel to the #street wall#, shall satisfy one linear foot of frontage mitigation requirements. Such planting bed shall extend to a depth of at least three feet, inclusive of any structure containing the planted material. Any individual planted area shall have a width of at least five feet, and the height of such planting, inclusive of any structure containing the planted materials, shall be at least three feet.

Where a blank wall exceeds a #street wall# width of 50 feet, at least 25 percent of such #street wall# width shall be planted in accordance with the provisions of this paragraph.

(b) Benches

Fixed benches with or without backs shall be provided in front of the #street wall#. Unobstructed access shall be provided between such benches and an adjoining sidewalk or required circulation paths. Each linear foot of bench, as measured parallel to the #street wall#, shall satisfy one linear foot of frontage mitigation requirement. Any individual bench shall have a width of at least five feet, and no more than 20 feet of benches may be used to fulfill such requirement per 50 feet of frontage.

(c) Bicycle racks

Bicycle racks, sufficient to accommodate at least two bicycles, shall be provided in front of the #street wall#, and oriented so that the bicycles are placed parallel to the #street wall#. Each bicycle rack so provided shall satisfy five linear feet of frontage mitigation requirement. No more than three bicycle racks may be used to fulfill such requirement per 50 feet of frontage.

(d) Tables and chairs

Fixed tables and chairs shall be provided in front of the #street wall#. Each table shall have a minimum diameter of two feet and have a minimum of two chairs associated with it. Each table and chair set so provided shall satisfy five linear feet of frontage mitigation requirement.

(e) Wall treatment

Wall treatment, in the form of permitted #signs#, graphic or sculptural art, rustication, decorative screening or latticework, or living plant material, shall be provided along the #street wall#. Each linear foot of wall treatment shall constitute one linear foot of frontage mitigation requirement. Such wall treatment shall extend to a height of at least 10 feet, as measured from the level of the adjoining sidewalk or grade, and have a minimum width of 10 feet, as measured parallel to the #street wall#.

Street Tree Requirements

In all districts, all #developments#, or #enlargements# that increase the #floor area# on a #zoning lot# by 20 percent or more, shall provide #street# trees in accordance with Section 26-41 (Street Tree Planting).

In addition, for #zoning lots# with over 100 feet of street frontage, wherever two required street tree pits will be separated by less than 25 feet, such street tree pit shall be combined and designed as a single continuous street tree pit.

139-43
Sidewalk Widening Requirements

For #developments# along the portions of #streets# designated on Map 4 (Sidewalk Widening Lines) in Appendix A of this Chapter, a sidewalk widening shall be required, providing a total sidewalk width, as measured perpendicular from the #street line#, of:

(a) 17 feet along Third Avenue;

(b) 15 feet along Nevins Street; and

(c) 13 feet along Fifth Street.

Such sidewalk shall be improved to Department of Transportation standards and shall be provided at the same level as the adjoining public sidewalk and be accessible to the public at all times.

Awnings and canopies shall be considered permitted obstructions within a sidewalk widening provided that no structural posts or supports may be located within any portion of the sidewalk or such widening.

139-44
Bridge Connection Requirements

For all #zoning lots# abutting bridge structures supporting #streets# which cross the Gowanus Canal at Union Street, Carroll Street, and Third Street, and are subject to #waterfront public access area# requirements, such #waterfront public access area# shall be designed to provide pedestrian connection to the #street# adjacent to the terminus of the bridge structure.

The requirements of this Section may be waived where the New York City Department of Transportation determines that such a pedestrian connection to the #street# would result in a hazard to traffic safety.

139-45
Waterfront Public Access Area Requirements

For all #waterfront zoning lots#, the exemptions from #waterfront public access area# requirements listed in paragraph (a) of Section 62-52 shall not apply.

(a) Reduced requirement for certain manufacturing uses

For #zoning lots# with #developments#, #enlargements#, or #conversions# comprised of #predominantly# Use Group 18 #uses#, as listed in Section 42-15, the reduced design requirements of Section 62-58 (Requirements for Water-Dependent Uses and Other Developments) shall apply to #waterfront public access areas#.

(b) Authorization for incompatible uses

For #zoning lots# comprised #predominantly# of Use Group 16, 17, or 18 #uses#, the City Planning Commission may authorize the waiver of #waterfront public access area# requirements, provided the Commission finds that:

(1) such #uses# produce objectionable effects on its surroundings such that the #uses# are incompatible with a waterfront public access requirement; or

(2) such #uses# have demonstrable operational requirements which would be incompatible with waterfront public access requirements; and

(3) such waiver is the least necessary to accommodate the proposed #uses#.

Such waivers shall be in effect for as long as the proposed #use# remains on the #zoning lot#. Upon #development# of the #zoning lot# following cessation of the #use# for a period of more than two years, full compliance with #waterfront public access area# requirements, as may be modified by future approvals, is required.

139-46
Transit Improvements

139-461
Certification for transit easements

For all #developments#, or #enlargements# involving ground floor level construction, on a #zoning lot# with a #lot area# of 5,000 square feet or greater and wholly or partially located within 50 feet of a subway station, a transit easement volume may be needed on such #zoning lot# for public access between the #street# and the adjacent above- or below-grade subway station, pursuant to paragraph (a) of this Section.

(a) Transit easement volume certification

Prior to filing any application with the Department of Buildings for an excavation permit, foundation permit, new building permit or alteration permit for a #development# or #enlargement#, the owner of the #zoning lot# shall file an application with the Metropolitan Transportation Authority (MTA) and the Chairperson of the City Planning Commission requesting a certification as to whether or not a transit easement volume is needed on the #zoning lot#.

Within 60 days of receipt of such application, the MTA and the Chairperson shall jointly certify whether or not a transit easement volume is needed on the #zoning lot#. Failure to certify within the 60-day period will release the owner from any obligation to provide a transit easement volume on such #zoning lot#.

When the MTA and the Chairperson indicate that a transit easement volume is needed, the MTA shall, in consultation with the owner of the #zoning lot# and the Chairperson, determine the location and appropriate type of transit easement and reasonable dimensions for such transit easement volume, as well as the mechanism for and the terms of the eventual conveyance.

The owner shall submit a site plan showing a proposed location of such transit easement volume that would provide access between the #street# and the adjacent subway station and be compatible with the proposed #development# or #enlargement# on the #zoning lot# for joint approval and final certification by the MTA and the Chairperson. The MTA and the Chairperson shall comment on such site plan within 45 days of its receipt and may, within such 45-day period or following its expiration, permit the granting of an excavation permit while the location and size of the transit easement volume is being finalized. Upon joint approval of a site plan by the MTA and the Chairperson, copies of such certification shall be forwarded by the Chairperson to the Department of Buildings.

Legally enforceable instruments, running with the land, creating a transit easement volume, and setting forth the obligations of either the MTA or the owner and developer, their successors and assigns, to design and construct the improvement, as well as other basic terms of the easement shall be executed and recorded in a form acceptable to the MTA and the Chairperson. The execution and recording of such instruments shall be a precondition to the issuance of any foundation permit, new building permit, or alteration permit by the Department of Buildings allowing such #development# or #enlargement#.

(b) Construction and maintenance

Where a transit easement volume is needed pursuant to this Section, transit access improvements within such volume shall be constructed and maintained either by the MTA or the owner of the #zoning lot# with the #development# or #enlargement#.

(1) Where such mass transit improvement is constructed and maintained by the owner of the #development # or #enlargement#

(i) a transit access improvement shall be provided in accordance with standards set forth by the MTA;

(ii) such improvement shall be accessible to the public at all times, except as otherwise approved by the MTA;

(iii) such improvement shall include #signs# to announce accessibility to the public. Such #signs# shall be exempt from the maximum #surface area# of non-#illuminated signs# permitted by Section 32-642 (Non-illuminated signs); and

(iv) no temporary certificate of occupancy shall be granted by the Department of Buildings for the #building# until the Chairperson of the City Planning Commission, acting in consultation with the MTA, has certified that the improvement is substantially complete and usable by the public.

(2) Where such mass transit improvement is constructed and maintained by the MTA:

(i) Where the construction of the improvement is not contemporaneous with the construction of the #development# or #enlargement#, any underground walls constructed along the #front lot line# adjacent to a below-grade subway station shall include a knockout panel, not less than 12 feet wide, below #curb level# down to the bottom of the easement. The actual location and size of such knockout panel shall be determined through consultation with the MTA.

(ii) Temporary construction access shall be granted to the MTA on portions of the #zoning lot# outside of the transit easement volume, as necessary, to enable construction within and connection to the transit easement volume.

(iii) In the event that the MTA has approved of obstructions associated with the #development# or #enlargement# within the transit easement volume, such as building columns or footings, such construction and maintenance shall exclude any such obstructions within the transit easement volume.

(c) Additional modifications

Where a transit easement volume is needed pursuant to paragraph (a) of this Section, the Chairperson of the City Planning Commission shall certify the following modifications in conjunction with such transit easement volume certification:

(1) the edge of the transit easement volume facing the #street# shall be considered a #street wall# for the purposes of applying the #street wall# location provisions set forth in Section 139-23 (Special Height and Setback Regulations), inclusive, irrespective of whether such volume is incorporated into a #building#;

(2) for #zoning lots# adjacent to a below-grade subway station, the maximum height for the #building# set forth in Section 139-23, inclusive, shall be increased by 10 feet;

(3) the floor space contained within any transit easement volume needed pursuant to this Section shall be excluded from the definition of #floor area#; and

(4) the street frontage of such transit easement volume shall be excluded for the purpose of applying the provisions of Section 139-41 (Ground Floor Level Requirements).

(d) Temporary use

Any easement volume needed on a #zoning lot# pursuant to paragraph (a) of this Section may be temporarily used for any permitted #commercial# or #community facility uses# until such time as needed by the MTA for transit access improvements. The floor space allocated to such temporary #uses# within the transit easement volume shall continue to be exempt from the definition of #floor area# and shall not be included for the purpose of calculating #accessory# off-street parking, bicycle parking, or loading berths.

Improvements or construction of a temporary nature within the easement volume for such temporary #uses# shall be removed by the owner of the #building# or portion of the #zoning lot# within which the easement volume is located prior to the time at which public #use# of the easement area is needed, except as otherwise specified by the MTA. A minimum notice of six months shall be given, in writing, by the MTA to the owner of the #building# or portion of the #zoning lot# to vacate the easement volume.

(e) Termination of an easement volume

In the event that the MTA and the City Planning Commission jointly notify the Department of Buildings and the owner in writing that a transit easement volume is not needed on a #zoning lot# in its final construction plans, the restrictions imposed on such #zoning lot# by the provisions of this Section shall lapse, following receipt of notification thereof by the owner, and the owner shall have the right to record an instrument reciting the consent of the MTA to the extinguishment of the easement volume.

On any #zoning lot# which has been #developed# or #enlarged# in accordance with the provisions of this Section and on which termination of transit easement has been certified, pursuant to this paragraph, any floor space in a previously needed transit easement volume shall continue to be exempt from the definition of #floor area# and shall not be included for the purpose of calculating requirements for #accessory# off-street parking, bicycle parking or loading berths. However, where such previously needed volume is located within a #building#, the ground floor space shall be subject to the provisions of Section 139-41 (Ground Floor Level Requirements).

Certification for transit improvements

In #Commercial Districts# with a residential equivalent of an R9 District, for #developments# on #zoning lots# that are located within 500 feet of the Union Street subway station, the Chairperson of the City Planning Commission may, by certification to the Commissioner of Buildings, allow a #development# to:

(1) receive a #floor area# bonus not to exceed 20 percent of the basic maximum floor area ratio permitted by Section 139-21 (Floor Area Regulations); and

(2) further modify additional height permitted pursuant to paragraph (c)(2) of Section 139-461), provided the total combined modification does not exceed 30 feet;

where a major improvement to the Union Street subway station consisting of one new off-street station entrance with an accessible route for persons with physical disabilities between two levels servicing the southbound platform is provided.

Prior to issuing such a certification, the Chairperson shall be provided with a letter and legal instrument as set forth in paragraph (e) of Section 139-463. The #development# shall also be subject to the recordation and completion procedures set forth in paragraph (f) of Section 139-463.

139-463
Authorization for transit improvements

In #Commercial Districts# with a residential equivalent of an R9 District, for all #developments# or #enlargements# on a #zoning lot# that is wholly or partially located within 500 feet of a subway station, the City Planning Commission may authorize a #floor area# bonus not to exceed 20 percent of the basic maximum floor area ratio permitted by Section 139-21 (Floor Area Regulations), and may modify the maximum #building height# permitted by Section 139-23 (Special Height and Setback Regulations), provided the modification does not exceed 30 feet, and street wall location requirements of Section 139-23 (Special Height and Setback Regulations) and the street wall continuity provisions of Section 139-41 (Ground Floor Level Requirements) where major improvements to adjacent subway stations are provided in accordance with the provisions of this Section.

The selection of subway station improvements shall be on a case-by-case basis and shall be subject to the approval of the Metropolitan Transportation Authority (MTA), and the City Planning Commission. All such improvements shall comply with all applicable design standards of the current station planning guidelines of MTA.

(a) Pre-application requirements

Prior to submitting an application for an authorization pursuant to this Section, the applicant shall submit a schematic or concept plan for the proposed improvement to the MTA and the Chairperson of the City Planning Commission.

(b) Requirements for application

An application for an authorization pursuant to this Section shall include a letter from MTA to the City Planning Commission containing conceptual approval of the improvement and a statement of any special considerations regarding MTA's future operation of the improvement. The applicant shall submit all information and justification sufficient to enable the City Planning Commission to:

(1) evaluate the benefits to the City;

(2) determine the appropriate amount of bonus #floor area#; and

(3) where applicable, assess the advantages and disadvantages of waiving or modifying #street wall# continuity requirements.

(c) Conditions

(1) The additional #floor area# authorized shall not exceed 20 percent of the basic maximum #floor area ratio# established in Row G of the table in Section 139-211 (Basic floor area regulations).

(2) The amount of modification to the maximum #building height# established in Section 139-23 (Special Height and Setback Regulations) shall not exceed 20 percent of the maximum #building height#.

(d) Findings

(1) In determining the amount of #floor area# bonus, the City Planning Commission shall consider the degree to which:

(i) the general accessibility and security of the subway station will be improved by the provision of new connections, additions to or reconfigurations of circulation space, including provision of escalators or elevators; and

(ii) significant improvements to the station's environment by increasing direct daylight access, or improvements to noise control, air quality, lighting or rider orientation and satisfactory integration of the #street# level entryway into the #development# or #enlargement# will occur.

(2) In determining #bulk# modifications, the Ciy Planning Commission shall find that such modifications would not unduly obstruct the light and air of neighboring properties.

(3) In determining modifications to ground floor level requirements, the City Planning Commission shall find that the provisions of a subway improvement cannot be accommodated without modification to these requirements.

(4) In determining modifications to #street wall# provisions, the Commission shall find that the modification will permit the proposed design to provide for access of daylight and air to the subway platform, mezzanine or concourse and that the advantages of such access outweigh the disadvantages incurred by the interruption of #street wall# and retail continuity.

(e) Procedural requirements

Prior to the granting of an authorization, the City Planning Commission shall be provided with the following:

(1) a letter from MTA stating that the drawings and other documents submitted by the applicant have been determined by MTA to be of sufficient scope and detail to fix and describe the size and character of the subway improvement as to architectural, structural, mechanical and electrical systems, materials, relationship to existing site conditions and such other conditions as may be appropriate, and that the construction of the subway improvement in accordance with such submission is feasible; and

(2) a legally enforceable instrument, acceptable ot the Department of City Planning, running with the land and signed by the applicant and all parties in interest, other than parties in interest who have waived and subordinated their interests, containing complete drawings of the improvement and setting forth the obligations of owner and developer, their successors and assigns, to construct and provide capital maintenance for the improvement, establish a construction schedule and provide a performance bond for completion of the improvement.

(f) Recordation and completion procedures

Any instrument creating a transit easement on the #zoning lot# pursuant to paragraph (e)(2) of Section 139-462 shall be recorded against the #zoning lot# receiving the #floor area# bonus in the Office of the Register of the City of New York and a certified copy of the instrument shall be submitted to the City Planning Commission and MTA. The applicant shall not apply for nor accept a temporary certificate of occupancy for the bonus #floor area#, and the Department of Buildings shall not issue such a temporary certificate of occupancy, until MTA has determined that the bonused subway improvement is substantially complete which shall, for this purpose, mean open to and usable by the public.

The applicant shall not apply for or accept a permanent certificate of occupancy for the #development# or #enlargement#, nor shall the Department of Buildings issue such permanent certificate of occupancy, until the bonused subway improvement has been completed in accordance with the approved plans and such completion has been certified by MTA.

The Commission may prescribe additional appropriate conditions and safeguards to enhance the character of the surrounding area.

139-47
Authorization for sites containing schools

For #zoning lots# containing #schools# regulated by the provisions of Section 139-214 (Special provisions for zoning lots containing schools), the City Planning Commission may authorize the modification of any #bulk# regulation, including the amount of floor space exempted from the definition of #floor area# by Section 139-214, in order to better accommodate a #school# upon such #zoning lot#.

(a) Conditions

(1) No modification to the maximum #building# height shall exceed 30 feet; and

(2) No modification to the amount of floor space exempted from the definition of #floor area# shall exceed an additional 60,000 square feet of floor space.

(b) Findings

In determining such modifications, the Commission shall find:

(1) such modification is the least modification required to achieve the purpose for which it is granted;

(2) the proposed modification does not impair the essential character of the surrounding area; and

(3) the proposed modification will not have adverse effects upon light, air, and privacy of adjacent properties and of any existing #buildings# on the #zoning lot#.

Applications for authorizations shall be referred to the affected Community Board for a period of at least 30 days for comment. The Commission shall grant in whole or in part or deny the application within 60 days of the completion of the Community Board review period.

139-48
Authorization for Large Mixed-use Sites

In Subdistrict B, for #developments# on #zoning lots# located in a #Mixed-Use District#, on a #zoning lot# greater than 40,000 square feet in #lot area#, the City Planning Commission may authorize the modification of the regulations set forth in paragraph (a) of this Section to facilitate a #development# that will result in a mix of #predominantly# non-#residential uses# on the #zoning lot#, provided that the findings set forth in paragraph (b) of this Section are met.

(a) Modifications

The Commission may modify the following regulations:

(1) the #use# regulations of this Chapter, limited to ground floor #use# regulations and supplemental #use# regulations;

(2) the #bulk# regulations of this Chapter, except #floor area ratio# regulations, provided that any modifications to height and setback regulations do not exceed the heights permitted in an M1-4 District as set forth in Section 43-43; and

(3) the parking regulations related to the location and spacing of curb cuts.

(b) Findings

In order to grant such authorization, the Commission shall find that:

(1) where modifying #bulk# regulations, such modifications shall result in a superior configuration of non-#residential uses# within the #building# than would be feasible by applying the #Special Gowanus Mixed Use District# regulations;

(3) where modifying ground floor #use# regulations, the advantages of an off-street loading and access outweigh the disadvantages incurred by the interruption of retail continuity; and

(4) where modifying supplemental #use# and curb cut regulations, that such modifications would present a limited interruption and would not create serious vehicular traffic congestion that would adversely affect the surrounding area.

Upon completion of the #development#, the #zoning lot# shall remain occupied by #predominantly# non-#residential use#. Such requirements shall be reflected in a notice of restrictions recorded against all tax lots comprising such #zoning lot#, and a copy of such notice shall be provided to the Department of Buildings.

The Commission may prescribe appropriate conditions and safeguards to minimize adverse effects on the character of the surrounding area.

139-50
GOWANUS CANAL WATERFRONT ACCESS PLAN

The provisions of Article VI, Chapter 2 (Special Regulations Applying in the Waterfront Area), shall apply, except as superseded, supplemented or modified by the provisions of this Section, inclusive.

The boundaries of the area comprising the Gowanus Canal Waterfront Access Plan, and the location of certain features mandated or permitted by the Plan, are shown on the maps in Appendix B of this Chapter.

The waterfront access plan has been divided into Parcels as shown on Map 1 of Appendix B of this Chapter, consisting of tax #blocks# and lots existing on [date of referral], as follows:

Parcel 1:	Block 417, Lots 1, 10, 14, 21
Parcel 2:	Block 424, Lots 1, 20
Parcel 3:	Block 431, Lots 1, 2, 5, 6, 7, 12, 17, 43
Parcel 4:	Block 425, Lot 1
	Block 432, Lots [1], 15, 25
Parcel 5:	Block 439, Lot 1
Parcel 6:	Block 438, Lots 1, 2, 3, 7
	Block 445, Lots 1, 7, 8, 11, 20, 50
Parcel 7:	Block 452, Lots 1, 5, 19
	Block 458, Lot 1
Parcel 8a:	Block 453, Lots 1, 21
Parcel 8b:	Block 453, Lot 26
Parcel 8c:	Block 453, Lots 30, 31, 32, 33, 35, 36, 38, 39, 41, 42, 43, 44, 44, 45, 46, 48, 49, 50, 51
Parcel 8d:	Block 453, Lot 54
Parcel 9:	Block 967, Lot 1
Parcel 10:	Block 967, Lot 24
Parcel 11:	Block 972, Lots 1, 43, 58
Parcel 12:	Block 462, Lots 1, 3, 4, 5, 6, 8, 9, 12, 14, 42, 44, 50, 51
Parcel 13:	Block 466, Lot 19
Parcel 14a:	Block 466, Lots 17, 60
Parcel 14b:	Block 466: Lot 1
Parcel 14c:	Block 466, Lot 46
Parcel 15a:	Block 471, Lot 125
Parcel 15b:	Block 471, Lot 104, 110, 114, 116
Parcel 16:	Block 471, Lots 1,100
Parcel 17:	Block 471, Lot 200

For the purposes of this Section, inclusive, the definition of #development# shall be as set forth in Section 62-11 (Definitions).

139-51
Area-Wide Modifications

The provisions of Article VI, Chapter 2 (Special Regulations Applying in the Waterfront Area) shall be modified in the area comprising the Gowanus Canal Waterfront Access Plan by the provisions of this Section.

(a) All #waterfront public access areas#

(1) Balconies

Balconies complying with the provisions of Section 23-132 (Balconies in R6 through R10 Districts) shall be permitted obstructions in #waterfront public access areas#, provided the depth of obstruction is limited to four feet, and provided they are located at or above the floor level of the third #story# above grade of the #building#.

(2) Sun control devices

Awnings and other sun control devices shall be permitted obstructions in #waterfront public access areas#. However, when located at a level higher than the first #story#, excluding a #basement#, all such devices:

(i) shall be limited to a maximum projection from a #building# wall of 2 feet, 6 inches; and

(ii) shall have solid surfaces that, in aggregate, cover an area no more than 30 percent of the area of the #building# wall (as viewed in elevation) from which they project.

(3) Kiosks

Where a #supplemental public access area# exceeds 15,000 square feet, a kiosk shall be a permitted obstruction in such #supplemental public access area# with an area up to 400 square feet, including roofed areas.

(b) #Shore public walkways#

(1) Width of circulation paths

#Shore public walkways# shall provide a required circulation path with a minimum clear width of 10 feet. Secondary paths, where provided, shall have a minimum clear width of at least 4.5 feet.

(2) Level of circulation paths

At least 80 percent of a required circulation path shall be located at a level no less than six feet above the #shoreline#. However, up to 40 percent of such required circulation path may be provided below such level when providing access to a "get-down" located no more than two feet above the level of the #shoreline#.

(3) Access to circulation paths

The provisions of paragraph (a)(1) of Section 62-62 (Design Requirements for Shore Public Walkways and Supplemental Public Access Areas) shall apply, except that where a #shore public walkway# is on a #zoning lot# that is adjacent

to a #zoning lot# which has not been improved with a #shore public walkway#, the portion of the circulation path that terminates at the common #zoning lot line# may be located within 40 feet of the shoreline.

In addition, for #zoning lots# adjoining #streets# containing bridge structures, the required connection of circulation paths to such a #street# may be waived by certification by the Department of Transportation, pursuant to Section 139-44 (Bridge Connection Requirements).

(4) Grading

The provisions of paragraph (d)(2) of Section 62-61 (General Provisions Applying to Waterfront Public Access Areas) shall be modified so that within five feet of the edge of any planting area, the grade level of such planting area shall be no more than 36 inches higher or lower than the adjoining level of the pedestrian circulation path.

(c) #Supplemental public access areas#

(1) Lawns

The provisions of paragraph (c)(1) of Section 62-62 shall be modified such that a lawn shall only be required where a #supplemental public access area# is greater than 15,000 square feet. The Commission may authorize use of artificial turf within a lawn pursuant to Section 62-822 (Modification of waterfront public access area and visual corridor requirements).

Where required, a lawn may be substituted for a publicly accessible field of equivalent size, which may be unplanted, and shall be suitable for active recreational use.

(2) Comfort stations

Where a publicly-accessible comfort station is provided as part of a #development#, the amount of #supplemental public access area# may be reduced by an amount equal to the size of the comfort station, provided that:

(i) the comfort station has an entrance fronting upon a #waterfront public access area#; and

(ii) a restrictive declaration, acceptable to the Department of City Planning and Department of Parks and Recreation, shall be executed and recorded, binding the owners, successors and assigns to provide and maintain such comfort station for the life of the #development#.

(d) Screening

Wherever a screening buffer is required to be provided, the minimum width of such buffer shall be four feet.

In addition to the waiver allowances of paragraph (c)(2)(iii) of Section 62-62, no screening buffer shall be required along the upland boundary, or portion thereof, which is adjacent to an unenclosed seating area #accessory# to a #Gowanus retail and entertainment use#. Where a screening buffer is so waived, design features shall be utilized to demarcate the #shore public walkway# or #supplemental public access area# from the non-publicly accessible area, which may include, but shall not be limited to, railings, fences, planting boxes, and distinct paving materials.

(e) #Street# treatment

The portion of a #street# that is adjacent to a #shore public walkway# shall be improved as upland access, for a depth equivalent to the adjacent #shore public walkway#. This upland access area shall be designed to include, at a minimum, the following design elements:

(1) a foot path with a minimum clear width of ten feet, providing a connection to both the sidewalk located in the #street# as well as to the adjacent #zoning lot#;

(2) eight linear feet of seating complying with Section 62-652 (Seating) for every 30 feet of #shoreline# upon which the #street# fronts; and

(3) planted areas, containing planting or trees complying with Section 62-655 (Planting and trees) and occupying no less than 25 percent of the continuation area.

(f) Bulkheads

Wherever the United States Environmental Protection Agency requires the installation of a bulkhead in a location seaward of the #zoning lot line#, the area located between the #lot line# and bulkhead may be utilized for the purposes of satisfying the #waterfront public access area# requirements of the #zoning lot#. Where the provisions of this paragraph (f) are utilized, the location of the bulkhead shall be considered the #shoreline# for the purposes of providing the required #waterfront public access areas#.

139-52
Special Public Access Provisions

The provisions of Sections 62-50 (GENERAL REQUIREMENTS FOR VISUAL CORRIDORS AND WATERFRONT PUBLIC ACCESS AREAS) and 62-60 (DESIGN REQUIREMENTS FOR WATERFRONT PUBLIC ACCESS AREAS) are modified at the following designated locations which are shown on Map 1 in Appendix B of this Chapter.

139-521
Parcels 4, 5, 13, 14 and 15

On Parcels 4, 5, 13, 14 and 15, where a #shore public walkway# is required, such #shore public walkway# shall have a minimum width of 30 feet.

139-522
Parcel 8

On Parcels 8a, 8b, and 8d, where a #shore public walkway# is required, such #shore public walkway# shall have a minimum width of 20 feet. In addition, an area equal to at least 25 percent of the area of the #shore public walkway# shall be planted, and one linear foot of seating shall be provided for every 125 feet of frontage along the Gowanus Canal.

139-523
Parcel 12

On Parcel 12, where a #supplemental public access area# adjoining an #upland connection# or #street# is provided, such #supplemental public access area# shall be permitted to be provided with a maximum width to depth ratio of 3:1, and the longest side shall be permitted to adjoin the #street#.

139-524
Parcel 14

On Parcel 14a, a #supplemental public access area# shall be provided along the entire length of the #lot line# adjoining Parcel 13, connecting the #street# to the #shore public walkway#, and shall comply with the design reference standards applicable to a Type 1 #upland connection# set forth in Section 62-64 (Design Requirements for Upland Connections). Such #supplemental public access area# may coincide with a #visual corridor# required pursuant to Section 139-53 (Special Visual Corridor Provisions).

139-525
Parcel 17

On Parcel 17, the total #lot area# utilized in the calculation of required #supplemental public access area# shall include all #zoning lot# portions located within Parcel 17, including portions of a #zoning lot# located within a #street#.

139-53
Special Visual Corridor Provisions

The provisions of Sections 62-512 (Dimension of visual corridors) and 64-82 (Modification of Waterfront Regulations Relating to Level of Yards, Visual Corridors and the Ground Floor) shall be modified by the provisions of this Section.

The lowest level of a #visual corridor# shall be determined by establishing a plane connecting the two points along the #street lines# from which the #visual corridor# emanates at an elevation five feet above #curb level# with the two points where the prolonged #street lines# intersect the #shoreline#, stabilized natural shore, bulkhead, upland edge of a #waterfront yard# raised pursuant to the provisions of paragraph (a) of Section 62-512, or the #base plane# of a #pier# or #platform#, whichever intersection occurs first. Such plane shall then continue horizontally seaward from the line of intersection. #Visual corridors# that are not prolongations of mapped #streets# shall be determined by establishing a plane connecting an elevation five feet above #curb level# at the two points along the #lot line# from which the #visual corridor# emanates with the two points of intersection at the #shoreline#, stabilized natural shore, bulkhead, upland edge of a #waterfront yard# raised pursuant to the provisions of paragraph (a) of Section 62-512, or the #base plane# of a #pier# or #platform#, whichever intersection occurs first.

139-54
Special Design Standards

The design requirements of Section 62-60 (DESIGN REQUIREMENTS FOR WATERFRONT PUBLIC ACCESS AREAS) are modified by the provisions of this Section, inclusive.

139-541
Special design standards for guardrails

In addition to the provisions of paragraph (a) of Section 62-651 (Guardrails, gates and other protective barriers), guardrails shall comply with the illustrations provided in either paragraph (a) or (b) of this Section, or shall be of a comparable design which is the minimum modification needed. Where modification is sought, it shall be deemed suitable by the Chair of the City Planning Commission in consultation with the NYC Department of Parks and Recreation (DPR).

(a) Option 1: vertical bar guardrail

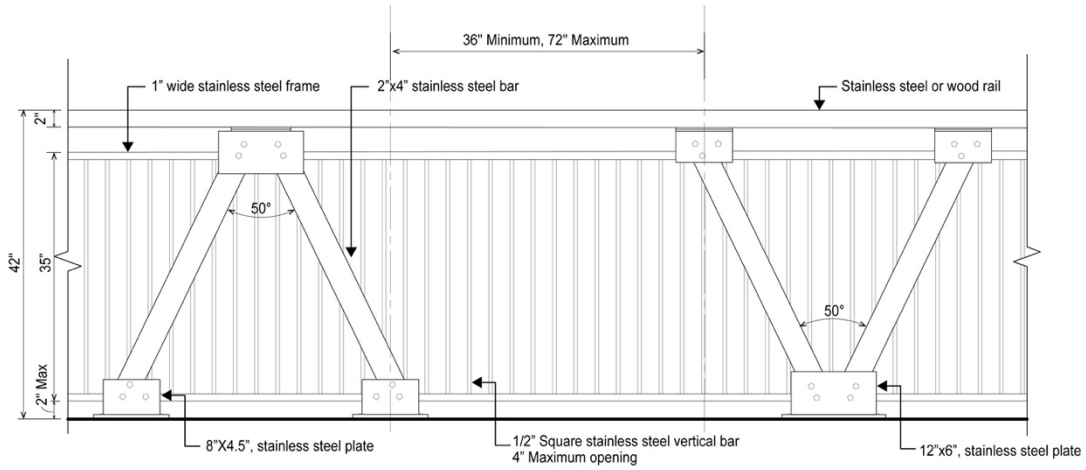

GUARDRAIL (TYPICAL)
Front Elevation

GUARDRAIL TERMINATION
Front Elevation

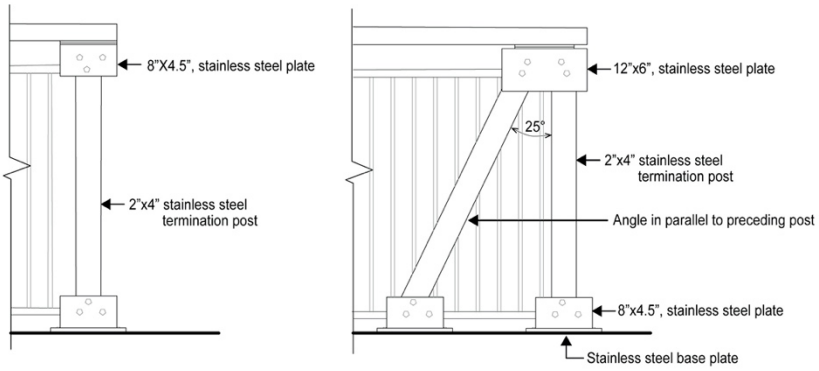

Alternate 1

Alternate 2

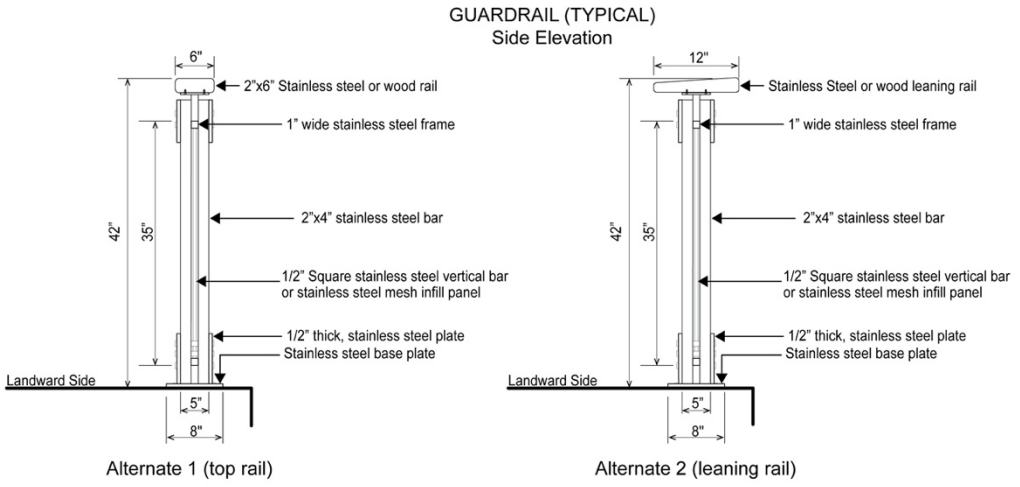

(b) Option 2: mesh guardrail

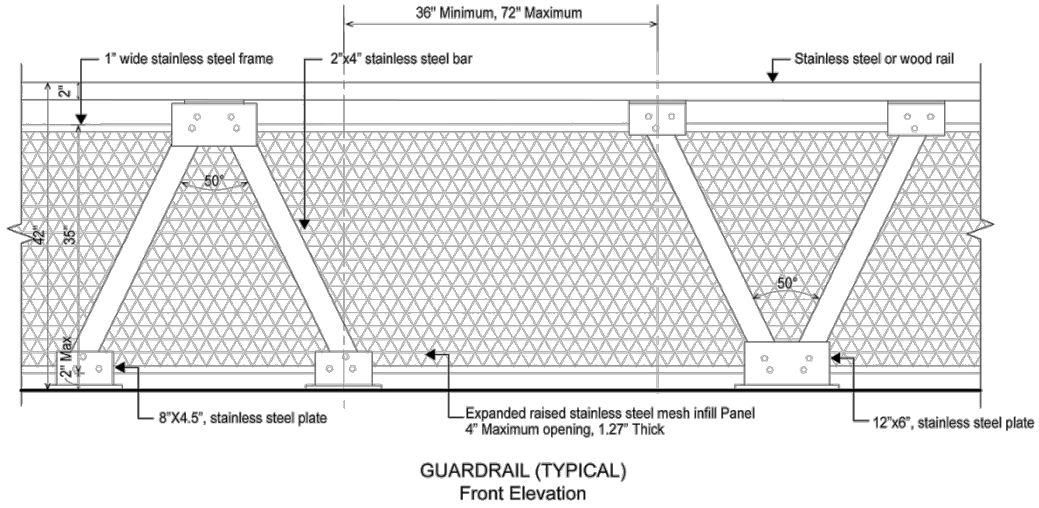

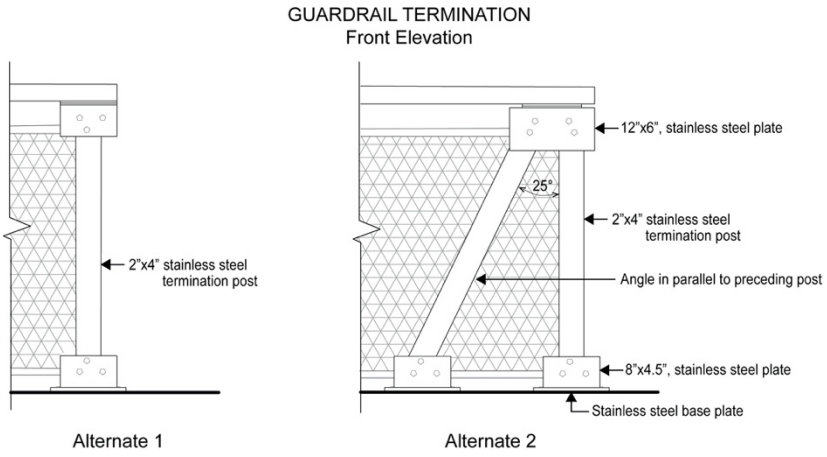

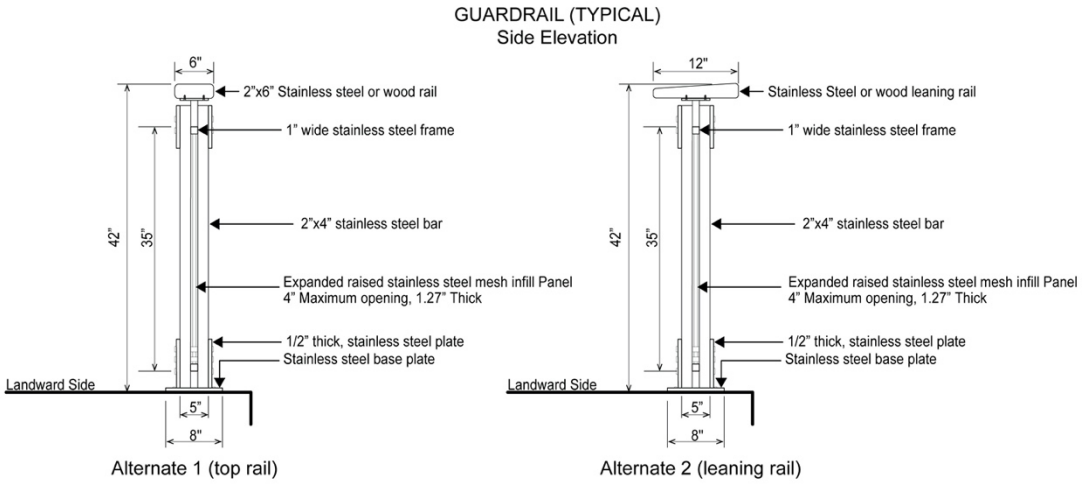

All guardrail components and hardware shall be in unpainted stainless steel and shall conform to any additional standards set forth by DPR.

139-542
Special design standards for seating

The design requirements of paragraph (b) of Section 62-62 (Design Requirements for Shore Public Walkways and Supplemental Public Access Areas) and the design reference standards of 62-652 (Seating) shall be modified as follows:

(a) Design feature seating

Planter ledges, seating walls, and seating steps may be provided, and shall be limited to 50 percent of the required seating. Walls and planter ledges shall be flat and smooth with at least one inch radius rounded edges.

(b) Seating depth

For all #waterfront public access areas#, the minimum seat depth requirement of paragraph (b) of Section 62-652 shall be modified to 16 inches.

139-543
Special design standards for lighting

The lighting requirements of 62-653 (Lighting) shall be modified such that an average maintained level of illumination not less than 0.5 horizontal foot candle (lumens per foot) shall be provided throughout all walkable areas, and the average illumination to minimum foot candle uniformity ratio shall be no greater than 6:1 within any #waterfront public access area#.

In addition, fixtures providing the required lighting along any public access area shall comply with the lightpost illustration in this Section, or shall be of a comparable design which is the minimum modification needed. Where modification is sought, it shall be deemed suitable by the Chair of the City Planning Commission in consultation with the by the New York City Department of Transportation (DOT).

Fixtures providing supplemental lighting beyond the requirements of this Section need not comply with this illustration.

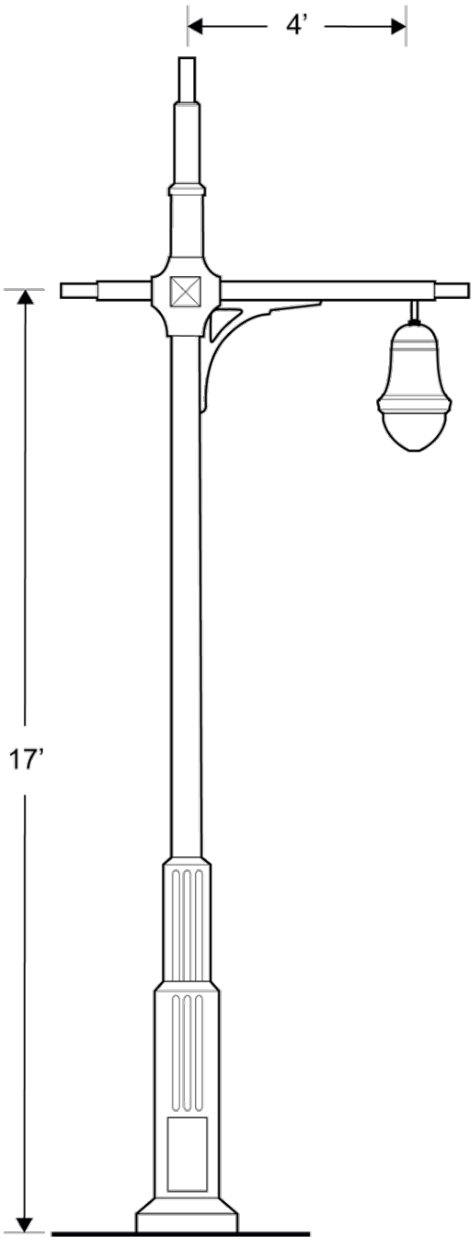

LIGHTPOST
Side Elevation

The lightpost shall conform to the street lighting standard drawings for a 17 foot “TBTA” short pole with “Tear Drop Luminare” set forth by the DOT.

139-544
Special design standards for planting

The design requirements of paragraph (c)(1) of Section 62-62(c)(1) (Design Requirements for Shore Public Walkways and Supplemental Public Access Areas) and the design reference standards of Section 62-655 (Planting and trees) shall be modified as follows:

(a) Reduction in planting requirement

An area equal to at least 35 percent of the area of the #shore public walkway# and #supplemental public access area# shall be planted. Such planting area may be reduced to 30 percent if an amenity is provided in accordance with the following tables:

TABLE 1

Amenity	Reduction per feature (in square feet)
Picnic tables	22 square feet
Historic interpretation elements	20 square feet
Public art pieces	100 square feet
Fountains and water features	150 square feet

TABLE 2

Amenity	Ratio of reduction to size of feature (in square feet)
Active recreation courts	1:1
Tot-lots and playgrounds	1:1
Dog runs	1:1
Boat or kayak launches	1:1.5
Interactive water features	1:1.5

(b) Shade tree substitution

Where shade trees are required, no more than one required shade tree may be substituted by a shading element covering at least 450 square feet, when viewed in plan.

[Note: the provisions of paragraph (c) will be removed upon adoption of identical provisions in Zoning for Coastal Flood Resiliency]

(c) Tidal wetland area

A "tidal wetland area" is an area planted with species tolerant of saline water inundation that is located between the mean low water line and the landward edge of the stabilized

natural shore or bulkhead. A tidal wetland area may satisfy up to 30 percent of the required planting area for #waterfront public access areas#.

Where a tidal wetland area is provided, the depth of the #waterfront yard# may be reduced, up to seven feeet, by one foot for every foot of stabilized natural shore or intertidal planting area beyond the landward edge of the bulkhead, stabilized natural shore or #shoreline#. Such reduction in depth shall not extend along more than 30 percent of the #shoreline# of the #waterfront zoning lot#. In addition, the width of the #shore public walkway# may be reduced, up to seven feet, by one foot for every foot of #tidal wetland area# along the seaward edge of the #waterfront yard#. Such reduction in depth shall not extend along more than 30 percent of the #shoreline# of the #waterfront zoning lot#.

139-545
Special design standards for paving

The design reference standards of Section 62-656 (Paving) shall be modified as follows:

(a) #Upland connections#

Paving for driveways and pedestrian paths located within Type 2 #upland connections# shall be subject to the "shared street" standards of the New York City Department of Transportation for roadbeds and sidewalks.

In addition, where a Type 2 #upland connection# is provided with a vehicular turnaround, the paved area of the vehicular turnaround shall be designed with at least two different paving materials, or a single material with at least two different unit paver or slab sizes.

(b) Dimensional requirements

The maximum sizes for unit pavers or concrete slabs shall not apply.

139-55
Special Signage Regulations

Any #accessory sign# that is provided adjacent to any #waterfront public access area# shall be limited to a single non-illuminated #sign#, indicating only the name or address of the #building# or commercial establishment to which it is #accessory#, not exceeding 16 inches in height.

* * *

APPENDIX A
Special Gowanus Mixed Use District Plan

Map 1: Subdistricts

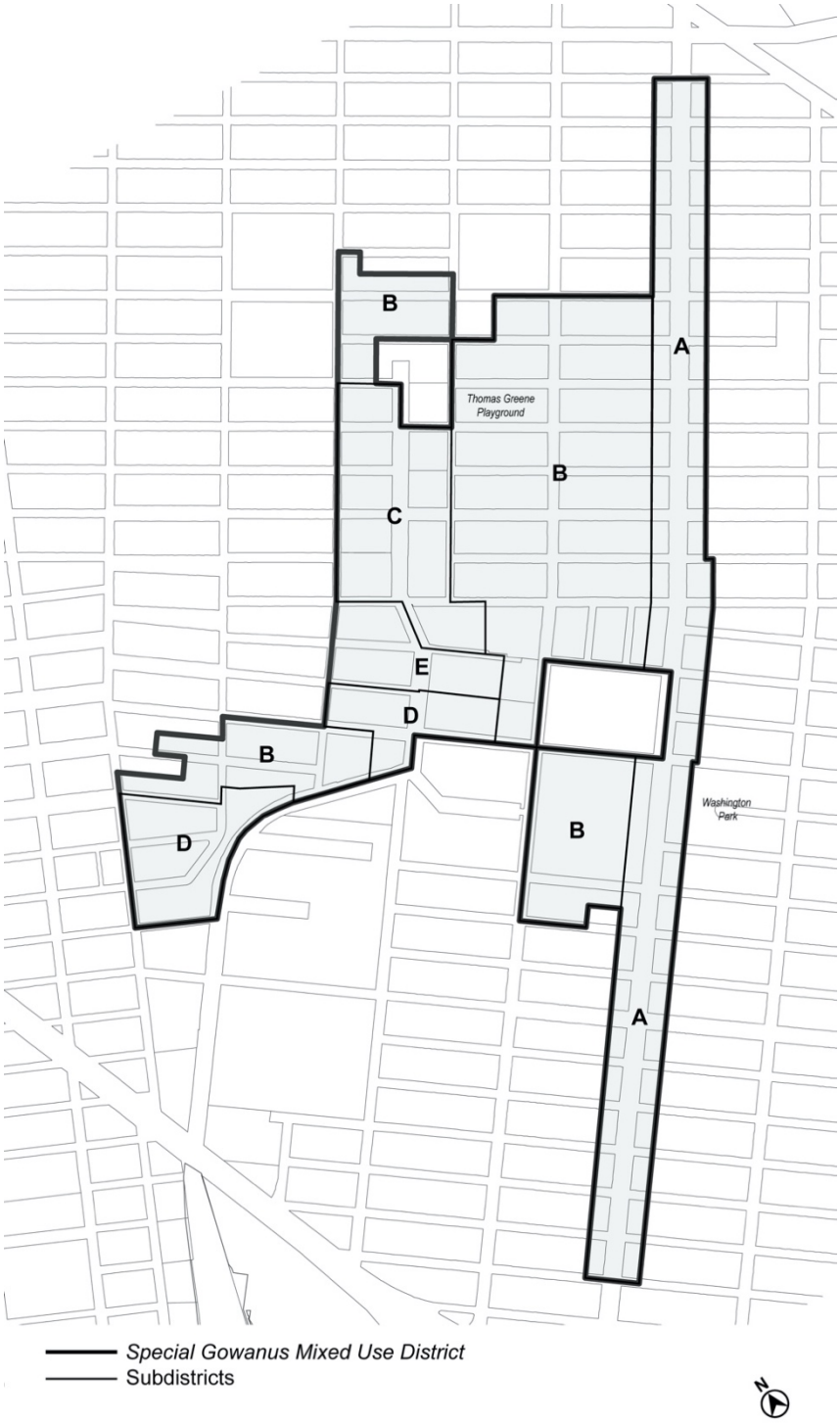

Map 2: Subareas

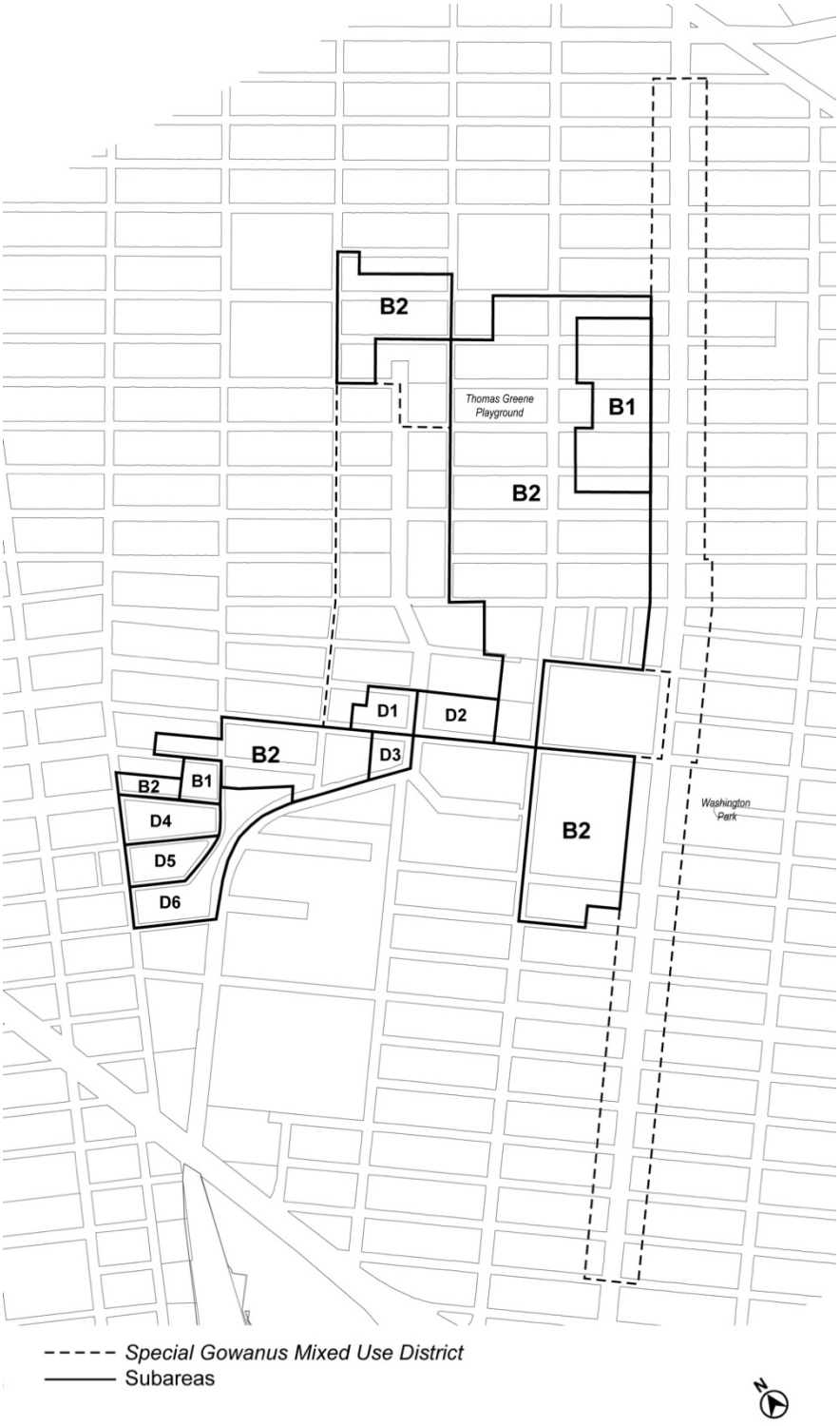

Map 3: Ground Floor Use Requirements



Map 4: Sidewalk Widening Lines



APPENDIX B
Gowanus Canal Waterfront Access Plan

Map 1: Parcel Designation

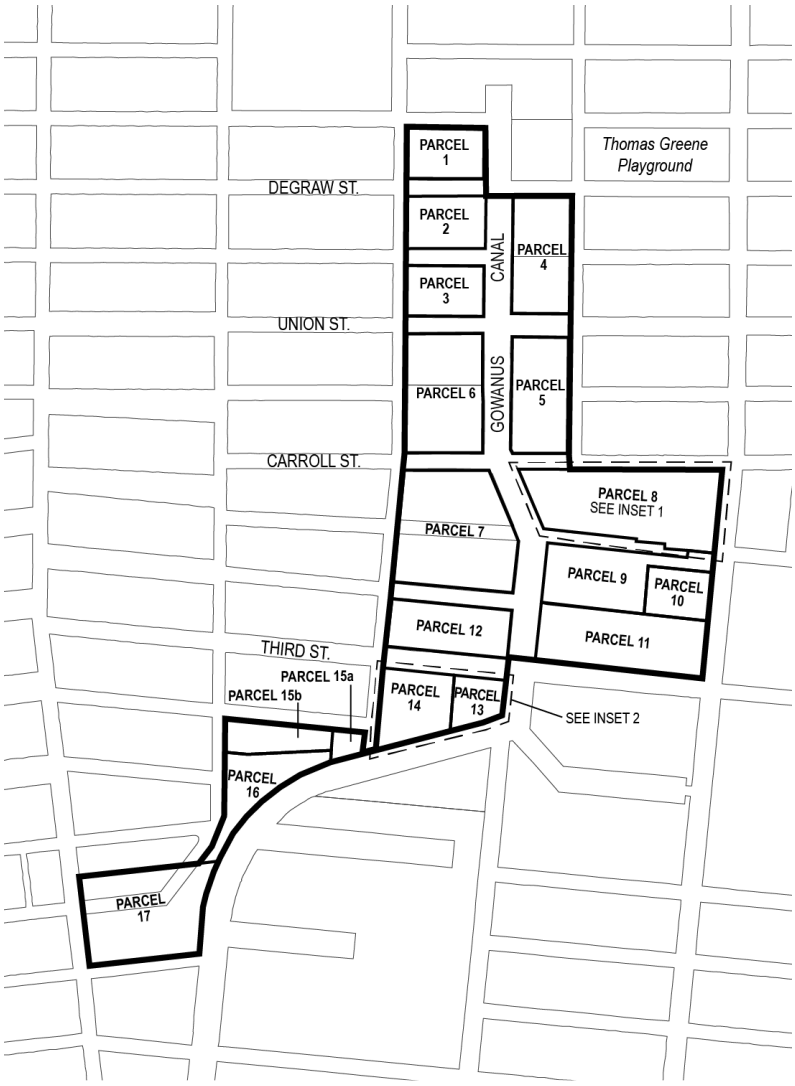

Map 2: Public Access Elements

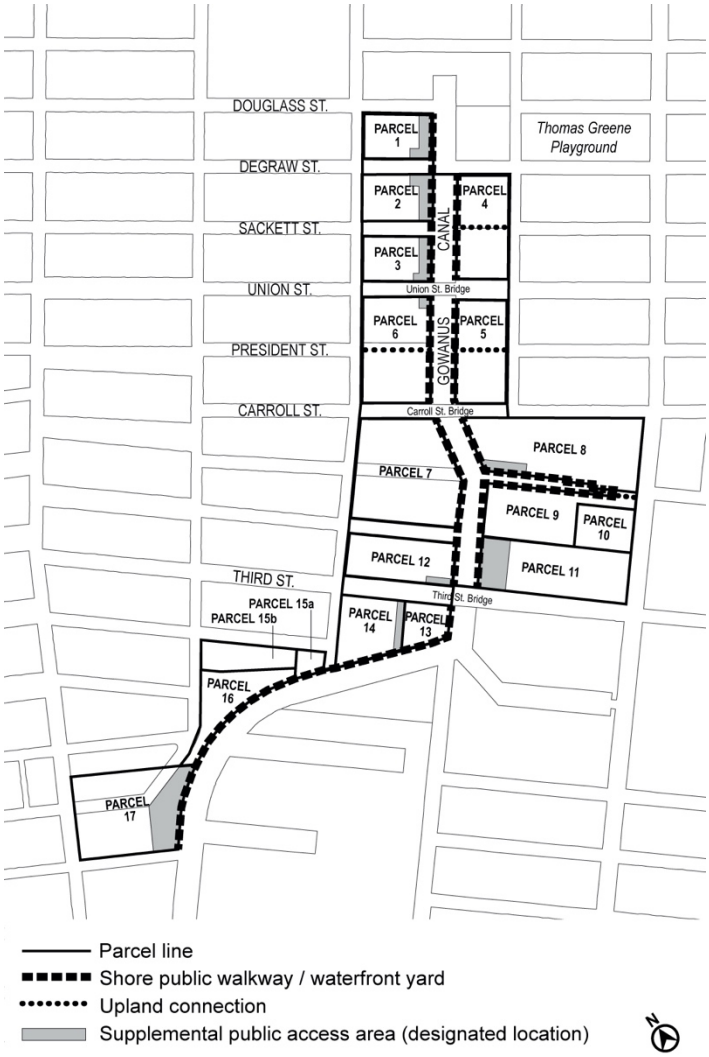

Map 3: Designated Visual Corridors

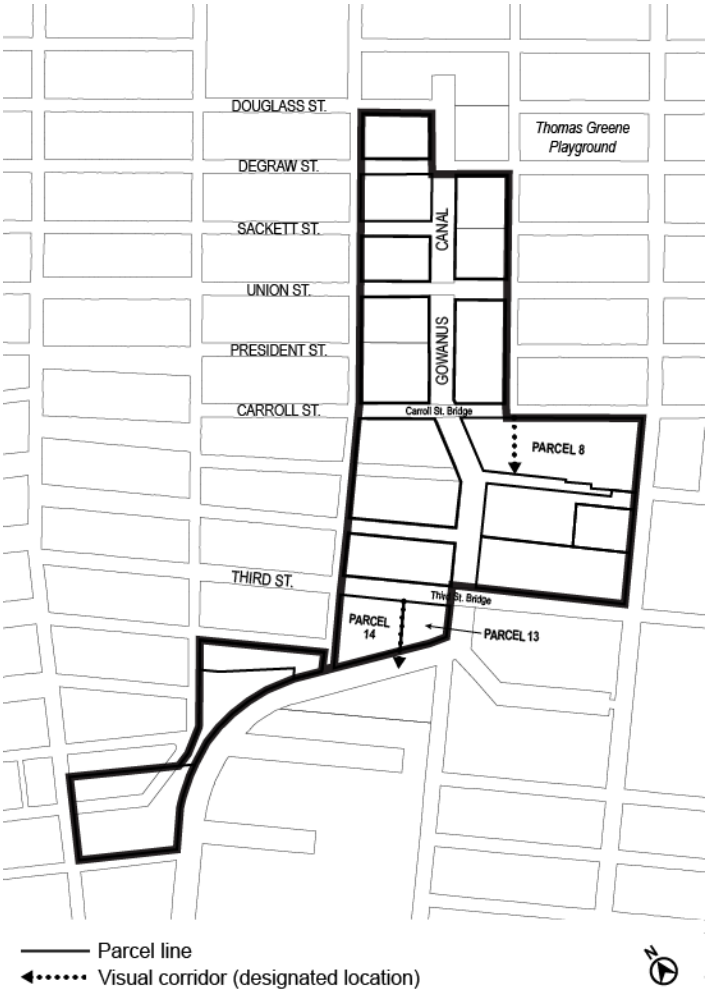

APPENDIX F
Inclusionary Housing Designated Areas and Mandatory Inclusionary Housing Areas

* * *

BROOKLYN

* * *

Brooklyn Community District 6

Map 1 - (~~3/11/09~~ [date of adoption])

[EXISTING MAP TO BE DELETED]

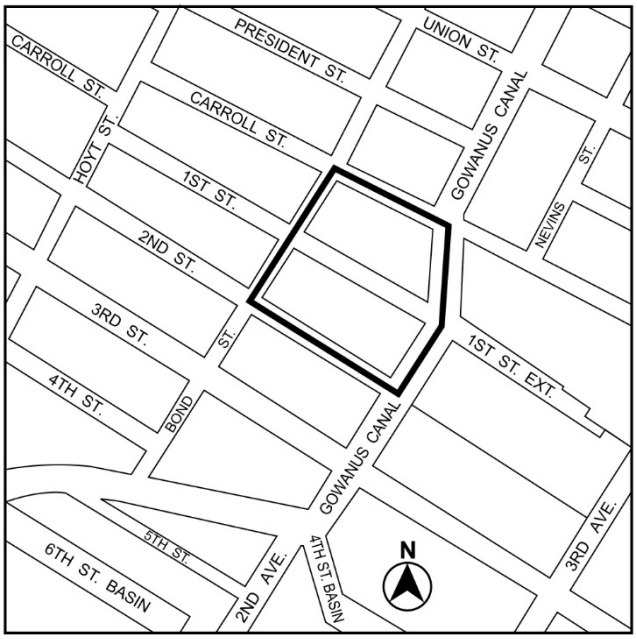

[NEW MAP TO BE ADDED]



Portion of Community District 6, Brooklyn

* * *

[END]