

1 SITE VIEW

SCALE: NTS

LIST OF DRAWINGS

LANDSCAPE ARCHITECTURE DWGS

L-000.00 COVER SHEET
L-000.01 SURVEY
L-001.00 WPAA/ZONING LOT SITE PLAN

Z-01.00 WATERFRONT PUBLIC ACCESS AREA ZONING CALCULATIONS
Z-02.00 WATERFRONT PUBLIC ACCESS AREA ZONING CALCULATIONS
Z-03.00 WATERFRONT PUBLIC ACCESS AREA ZONING CALCULATIONS
Z-04.00 WATERFRONT PUBLIC ACCESS AREA ZONING CALCULATIONS
Z-05.00 WATERFRONT PUBLIC ACCESS AREA ZONING CALCULATIONS

PLANS

L- 100.00 KEY & DIMENSION PLAN

L- 200.00 GRADING PLAN

L- 300.00 PLANTING PLAN
L- 301.00 PLANT PRECEDENT IMAGES

L- 400.00 MATERIALS PLAN

L- 401.00 FURNITURE PLAN
L- 402.00 FURNITURE PLAN

L- 403.00 LIGHTING PLAN/PHOTOMETRIC PLAN

SECTIONS

L-500.00 SECTIONS
L-501.00 SECTIONS
L-502.00 SECTIONS

DETAILS

L-600.00 DETAILS

L-601.00 PLANTING DETAILS

L-602.00 SITE DETAILS

L-603.00 SEATING DETAILS

SYMBOLS

SECTION — SECTION DRAWING LABEL, SHEET PREFERENCE

ELEVATION PREFERENCE — SECTION DRAWING LIMIT, SHEET PREFERENCE

DETAIL DRAWING LABEL, SHEET REFERENCE

AD- AREA DRAIN

PD- PLANTER DRAIN
LD- LAWN DRAIN

WORK POINT OR ELEVATION REFERENCE

REVISION SYMBOL

MATERIAL

- GRANITE OR STONE
- CONCRETE
- PRE-CAST CONCRETE
- FACE BRICK
- AGGREGATE STONE OR GRANITE
- INSULATION
- COMPACTED SUBGRADE
- STRUCTURAL STEEL
- DRAINAGE BOARD

ABBREVIATIONS

℄	CENTERLINE	GR	GRADE
⌀	DIAMETER		
ℙ or DIM	PROPERTY LINE	HT	HEIGHT
@	AT	HP	HIGH POINT
W/	WITH		
W/O	WITHOUT	IN	INCH
		JT	JOINT
AD	AREA DRAIN		
ARCHL	ARCHITECTURAL	LD	LAWN DRAIN
		LP	LOW POINT
BC	BOTTOM OF CURB	LW	LIGHT WEIGHT
BLDG	BUILDING		
BW	BOTTOM OF WALL	MAX	MAXIMUM
		MECH	MECHANICAL
CB	CATCH BASIN	MFR	MANUFACTURER
CIP	CAST IN PLACE	MIN	MINIMUM
		MISC	MISCELLANEOUS
CMU	CONCRETE MASONRY UNIT		
CONC	CONCRETE	NIC	NOT IN CONTRACT
CONT	CONTINOUS	NTS	NOT TO SCALE
CP	CENTER POINT		
		OC	ON CENTER
DIA	DIAMETER	OD	OUTSIDE DIAMETER
DWG	DRAWING		
		PAV'T	PAVEMENT
EA	EACH	PD	PLANTER DRAIN
EJ or EXP JT	EXPANSION JOINT		
EL	ELEVATION	R	RADIUS
ELEC	ELECTRICAL	REF	REFERENCE
EQ	EQUAL	REINF	REINFORCED
EQUIP	EQUIPMENT		
EXIST	EXISTING	SS	STAINLESS STEEL
EW	EACH WAY		
		TC	TOP OF CURB
FG	FINISH GRADE	TW	TOP OF WALL
FFEL	FINISH FLOOR ELEVATION		



OWNER
KENT MEMBER LLC
505 FLUSHING AVE, BROOKLYN, NY 11205

CIVIL / PARKING ENGINEER
PHILIB HABIB AND ASSOCIATES
102 MADISON AVE # 11, NEW YORK, NY 10016

LANDSCAPE ARCHITECT
MPFP
120 BROADWAY 20TH FL, NEW YORK, NY 10271

LIGHTING DESIGNER
ONE LUX STUDIO
158 WEST 29TH STREET, FL 10, NEW YORK, NY 10001

LAND USE CONSULTANT
HERRICK FEINSTEIN LLP
TWO PARK AVENUE, NEW YORK, NY 10016

REV	DATE	DESCRIPTION
	3/24/2021	ULURP SUBMISSION
	11/03/2021	ULURP SUBMISSION
	06/22/2022	ULURP SUBMISSION
	09/08/2022	ULURP SUBMISSION
	01/11/2023	DPR REVIEW
	03/22/2023	ULURP SUBMISSION

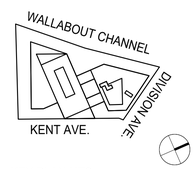

KEY PLAN:NTS

500 KENT

500 KENT AVENUE
BROOKLYN, NY 11249

ID #2019K0330

COVER SHEET

SCALE:

DRAWING #:

L-000.00

___ of ___

DOB JOB:

3/22/2021 7:28:54 PM

© MARVEL ARCHITECTS, PLLC 2018

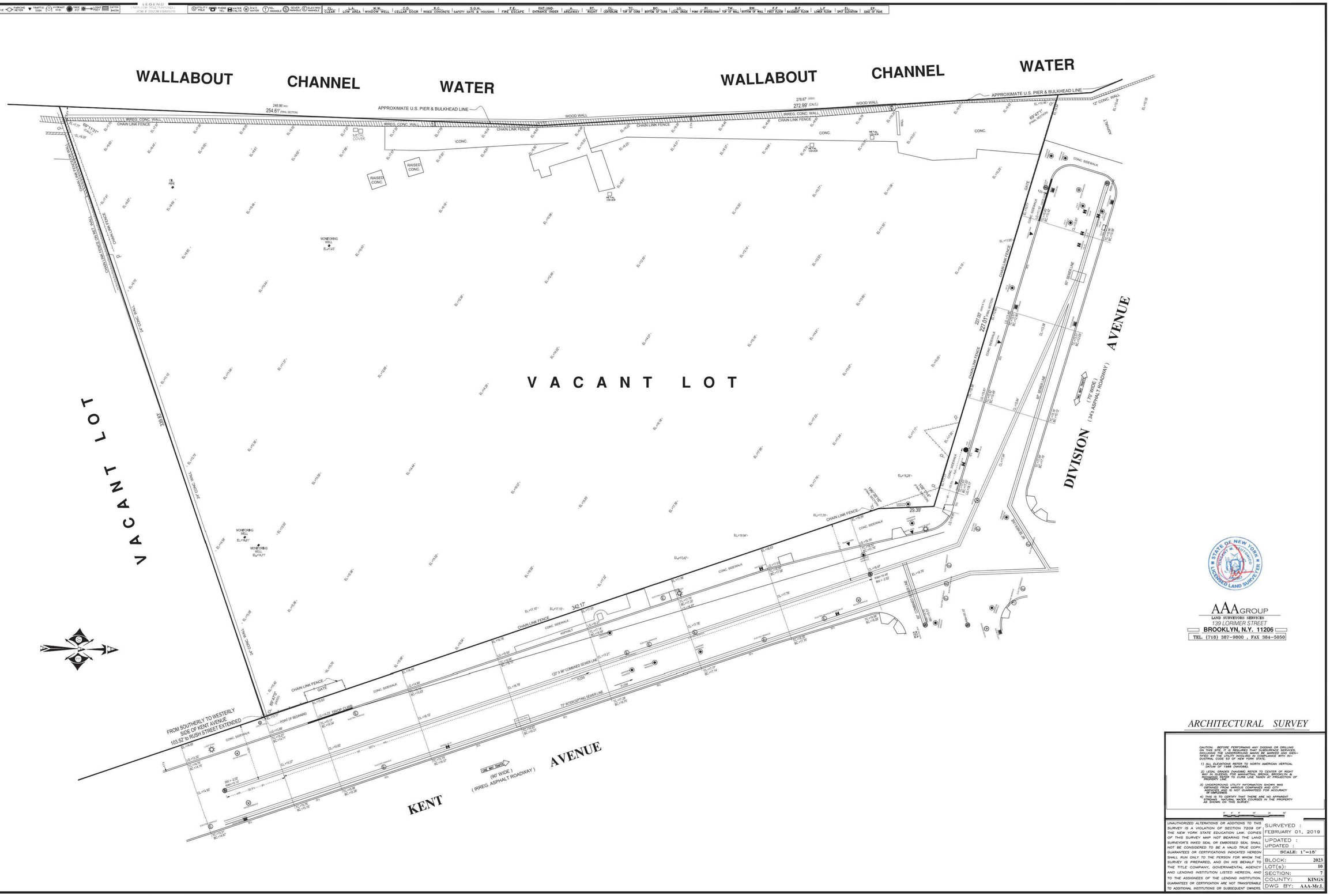
LEGEND
UNDERLINE YELLOW MARKINGS
JOB # 2023K1089570
GAS VALVE
PARKING METER
TRAFFIC SIGN
HYDRANT HYD.
TREE PIT
LIGHT POST
CATCH BASIN
UTILITY POLE
PHONE TEL.
WATER VALVE
D.V.C. WATER
TEL. MANHOLE
SEWER MANHOLE
ELECTRIC MANHOLE
CL: CLEAR
L.A. LOW AREA
W.W. WINDOW WELL
C.D. CELLAR DOOR
R.C. RISED CONCRETE
S.G.H. SAFETY GATE & HOUSING
F.E. FIRE ESCAPE
ENT.UND. ENTRANCE UNDER
A. AREAWAY
RT. RIGHT
CL. CENTERLINE
TC: TOP OF CURB
BC: BOTTOM OF CURB
LG: LEGAL GRADE
PI POINT OF INTERSECTION
TW: TOP OF WALL
BW: BOTTOM OF WALL
F.F. FIRST FLOOR
B.F. BASEMENT FLOOR
L.F. LOWER FLOOR
EL. SPOT ELEVATION
EP: EDGE OF PAVE
WALLABOUT CHANNEL WATER
WALLABOUT CHANNEL WATER
APPROXIMATE U.S. PIER & BULKHEAD LINE
248.96' (MEA) 254.81' (FINAL SECTION)
272.99' (CALC)
WOOD WALL
IRREG. CONC. WALL
CHAIN LINK FENCE
METAL COVER
RAISED CONC.
CONC.
MONITORING WELL
CH PIPE
TWIN CHOKO 24"
24" CONC. WALL
V A C A N T L O T
FROM SOUTHERLY TO WESTERLY SIDE OF KENT AVENUE 103.52' TO RUSH STREET EXTENDED
89°47'0" (RECD)
POINT OF BEGINNING
CONC. CURB
342.1'
CHAIN LINK FENCE
CONC. SIDEWALK
ASPHALT
120" X 96" COMBINED SEWER LINE
72" INTERCEPTING SEWER LINE
FLOW
GATE
ONE WAY TRAFFIC
(60' WIDE)
(IRREG. ASPHALT ROADWAY)
KENT AVENUE
DIVISION AVENUE
(70' WIDE)
(34'± ASPHALT ROADWAY)
227.09' (MEA) 227.01' (FINAL SECTION)
89°47'1" (RECD)
89°47'1" (FINAL SECTION)
12" CONC. WALL
ASPHALT
CONC. SIDEWALK
CHAIN LINK FENCE
8" BRICK LINE
29.39'
29.39'
N89°47'14"E
N89°47'14"W
EL=111.35
EL=17.29'
EL=19.94'
EL=17.42'
EL=17.10'
EL=17.10'
EL=17.78'
EL=18.78'
EL=18.59'
EL=18.63'
EL=18.78'
EL=18.78'
EL=18.78

SITE PLAN LEGEND

- OFFICE ACCESS POINT
- COMMERCIAL ACCESS
- LOADING DOCK UG 6B
- PARKING INGRESS/EGRESS
- BUILDING ENTRANCE POINTS SHOWN FOR ILLUSTRATIVE PURPOSES ONLY
- M1-5 / R7X — ZONING DISTRICT
- 23 — # STORIES
- 4B — # STORIES W/ BASEMENT
- 4S — # STORIES W/ STORE
- 65' — BUILDING HEIGHT
- ROAD DIRECTION
- WPAA BOUNDARY
- ZONING LOT LINE
- ZONING DISTRICT BOUNDARY
- ILLUSTRATIVE BUILDING LINE
- PROPOSED MAXIMUM BUILDING ENVELOPE
- SHORE PUBLIC WALKWAY
- SUPPLEMENTAL PUBLIC ACCESS AREA
- PAA 1
- PAA 2
- VISUAL CORRIDOR
- U.S. PIER & BULKHEAD LINES
- REMOVED LIGHTING POLE
- PROPOSED LIGHTING POLE
- EXISTING LIGHTING POLE
- FIRE HYDRANT
- PROPOSED TREE
- EXISTING TREE
- EXISTING POST
- EXISTING MANHOLE
- EXISTING SIGN
- EXISTING EMERGENCY PHONE
- EXISTING STREET VENT GRILLE
- EXISTING CATCH BASIN
- EXISTING BUS STOP
- HT +0'-0" (HT +0'-0") — PROP. MAX. BLDG. ENVELOPE HEIGHT / ILLUSTRATIVE BUILDING HEIGHT
- PROPOSED BUILDING FOOTPRINT
- CLEAR CIRCULATION PATH

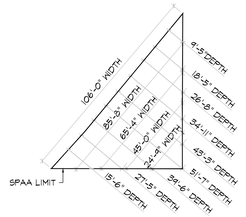

SPAA WEIGHTED AREA CALCULATIONS	
TOTAL AREA	2,714 SF
AVERAGE WIDTH	65'-3"
AVERAGE DEPTH	24'-6"
AVERAGE WIDTH TO DEPTH RATIO	2.2 : 1

ZONING SUMMARY

GENERAL INFORMATION
BLOCK/ LOT(S): 10/2023
ZONING MAP: 12d
ZONING DISTRICT: M1-5

COMMUNITY DISTRICT: BROOKLYN COMMUNITY DISTRICT 2

ZONING LOT AREA: **115,244 SF (ALL UPLAND) 2.64 ACRES**

LOT AREA: **115,244 SF**
TOTAL REQUIRED WPAA AREA (20%) OF 64,264 SF): **23,049 SF**
SPW: **20,466 SF**
UPLAND CONNECTION: **0 SF TOTAL**
WPAA (ONLY WITH SPW): **20,466 SF < 23,049 SF**
SUPPLEMENTAL PAA: **2,714 SF**
TOTAL WPAA (SPW + SPAA): **23,180 SF**

TOTAL PROVIDED PUBLIC ACCESS AREAS
PAA1: **12,220 SF**
PAA2/VISUAL CORRIDOR: **14,053 SF**
TOTAL PAA: **26,783 SF**



OWNER
KENT MEMBER LLC
505 FLUSHING AVE, BROOKLYN, NY 11205

CIVIL / PARKING ENGINEER
PHILIB HABIB AND ASSOCIATES
102 MADISON AVE # 11, NEW YORK, NY 10016

LANDSCAPE ARCHITECT
MPFP
120 BROADWAY 20TH FL, NEW YORK, NY 10271

LIGHTING DESIGNER
ONE LUX STUDIO
158 WEST 29TH STREET, FL 10, NEW YORK, NY 10001

LAND USE CONSULTANT
HERRICK FEINSTEIN LLP
TWO PARK AVENUE, NEW YORK, NY 10016

REV	DATE	DESCRIPTION
	3/24/2021	ULURP SUBMISSION
	11/03/2021	ULURP SUBMISSION
	06/22/2022	ULURP SUBMISSION
	09/08/2022	ULURP SUBMISSION
	01/11/2023	DPR REVIEW
	03/22/2023	ULURP SUBMISSION

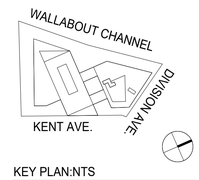

KEY PLAN:NTS

500 KENT

500 KENT AVENUE
BROOKLYN, NY 11249
ID #2019K0330

WPAA/ ZONING LOT SITE PLAN

SCALE: 1/16" = 1'-0"

DRAWING #:
L-00100
___ of ___
DOB JOB:

3/22/2021 7:28:54 PM © MARVEL ARCHITECTS, PLLC 2018

ZONING SECTION	ITEM	ZONING RESOLUTION	REQUIRED	PROVIDED	COMPLIANCE	DWG REF
62-51	APPLICABILITY OF VISUAL CORRIDOR REQUIREMENTS					
		VISUAL CORRIDORS SHALL BE PROVIDED FOR ZONING LOTS DEVELOPED WITHIN WATERFRONT BLOCKS IN ACCORDANCE WITH THE PROVISIONS OF THIS SECTION. EXCEPT FOR: AIRPORTS, HELIPORTS, AND SEAPLANE BASES; DEVELOPMENTS IN C8 OR MANUFACTURING DISTRICTS COMPRISED PREDOMINANTLY OF USES IN USE GROUPS 16, 17, OR 18, EXCEPT FOR DOCKING FACILITIES SERVING PASSENGER OCEAN VESSELS OR SIGHTSEEING, EXCURSION OR SPORT FISHING VESSELS; DEVELOPMENTS IN R1 OR R2 DISTRICTS; DEVELOPMENTS COMPRISED ON SINGLE OR TWO-FAMILY RESIDENCES WITHIN DETACHED, SEMI DETACHED OR ZERO LOT LINE BUILDINGS ON ZONING LOTS LESS THAN 10,000 SF IN ANY DISTRICT; EXTENSIONS; CHANGES OF USE WITHIN EXISTING BUILDINGS OR OTHER STRUCTURES. IN THE EVENT THE VISUAL CORRIDOR REQUIREMENT IMPOSED ON THE ZONING LOT EXCEEDS 50 PERCENT OF THE LOT WIDTH OR THERE IS NO WAY TO PROVIDE A VISUAL CORRIDOR IN COMPLIANCE WITH SECTION 62-511, NO VISUAL CORRIDORS SHALL BE REQUIRED.	VISUAL CORRIDOR MUST BE PROVIDED FOR ZONING LTOS DEVELOPED WITHIN WATERFRONT BLOCKS.	50'-0" VISUAL CORRIDOR PROVIDED	COMPLIES	L-001.00
62-51	LOCATION OF VISUAL CORRIDORS					
62-511(A)		THE STREET LINES OF A STREET SHOWN ON THE CITY MAP WHICH EXTEND SEAWARD OF THE FIRST UPLAND STREET BOUNDING A WATERFRONT BLOCK AND TERMINATE AT A WATERFRONT BLOCK SHALL BE PROLONGED AS A VISUAL CORRIDOR THOUGH ALL INTERVENING ZONING LOTS TO THE WATER IF THE PROLONGED STREET WOULD INTERSECT THE SHORELINE AT AN ANGLE OF 45 DEGREES OR MORE AND THERE ARE NO EXISTING OBSTRUCTIONS BLOCKING 50 PERCENT OR MORE OF THE WIDTH OF THE VISUAL CORRIDOR THAT WOULD RESULT.	N/A	N/A	N/A	N/A
62-511(B)		A VISUAL CORRIDOR DESIGNATED IN A WATERFRONT ACCESS PLAN THAT TRAVERSES THE ZONING LOT SHALL BE MAINTAINED THROUGH THE ZONING LOT IN ACCORDANCE WITH THE PROVISIONS OF SUCH PLAN; AND	N/A	50'-0" VISUAL CORRIDOR PROVIDED	COMPLIES	L-001.00
62-511(C)		THE STREET LINES OF A STREET SHOWN ON THE CITY MAP WHICH TERMINATE AT THE FIRST UPLAND STREET BOUNDING A WATERFRONT BLOCK, AND WHICH STREET WOULD, IF PROLONGED, TRAVERSE THE ZONING LOT AND INTERSECT THE SHORELINE AT AN ANGLE OF 45 DEGREES OR MORE WITHOUT TRAVERSING AN INTERVENING ZONING LOT, SHALL BE PROLONGED AS A VISUAL CORRIDOR IF THERE ARE NO EXISTING OBSTRUCTIONS BLOCKING 50 PERCENT OR MORE OF THE WIDTH OF THE VISUAL CORRIDOR THAT WOULD RESULT.	N/A	N/A	N/A	N/A
62-511		SUCH VISUAL CORRIDOR PURSUANT TO PARAPGRAPH (C) OF THIS SECTION SHALL NOT BE REQUIRED IF ANY OF THE FOLLOWING CONDITIONS EXIST WITHIN 400 FEET, AS MEASURED ALONG THE STREET LINE OF THE FIRST UPLAND STREET BOUNDING THE WATERFRONT BLOCK, AND ITS ELIMINATION DOES NOT RESULT IN A CONDTION WHEREBY VISUAL CORRIDORS THE ZONING LOT OR TO EITHER SIDE OF THE ZONING LOT ARE MORE THAN 600 FEET APART:	NA	N/A	N/A	N/A
62-511(1)		THERE IS AN EXISTING MAPPED STREET EXTENDING TO THE WATER THAT INTERSECTS THE SHORELINE AT AN ANGLE OF 45 DEGREES OF MORE;	NA	DIVISION AVENUE EXTENDS TO THE WATER AND INTERSETCT THE SHORELINE AT AN ANGLE OF 53 DEGREES	COMPLIES	L-001.00
62-511(2)		THERE IS A REQUIRED VISUAL CORRIDOR PURSUANT TO PARAGRAPH (A) OF THIS SECTION;	N/A	N/A	N/A	N/A
62-511(3)		THERE IS AN EXISTING DESIGNATED VISUAL CORRIDOR EITHER PREVIOUSLY RECORDED BY ANOTHER PROPERTY OWNER OR MANDATED IN A WATERFRONT ACCESS PLAN; OR	N/A	N/A	N/A	N/A
62-511(4)		THE PROPERTY OWNER IS CURRENTLY DESIGNATING ANOTHER VISUAL CORRIDOR THROUGH THE ZONING LOT PURSUANT TO PARAGRAPH (C) OF THIS SECTION WHICH IS EQUAL TO OR GREATER IN WIDTH THAN THE VISUAL CORRIDOR THAT WOULD BE ELIMINATED.	N/A	N/A	N/A	N/A
62-512	DIMENSIONS OF VISUAL CORRIDORS					
62-512		THE WIDTH OF A VISUAL CORRIDOR SHALL BE DETERMINED BY THE WIDTH OF THE STREET OF WHICH IT IS THE PROLONGATION BUT IN NO EVENT LESS THAN 50 FEET. VISUAL CORRIDORS THAT ARE NOT THE PROLONGATIONS OF STREETS SHALL BE AT LEAST 50 FEET WIDE. THE LOWEST LEVEL OF A VISUAL CORRIDOR SHALL BE DETERMINED BY A PLANE CONNECTING THE TWO POINTS ALONG THE STREET LINGS FROM WHICH THE VISUAL CORRIDOR EMANATES AT CURB ELEVATION WITH TWO POINTS WHERE THE PROLONGED STREET LINES INTERSECT THE SHORELINE, STABILIZED NATURAL SHORE, BULKHEAD OR THE BASE PLANE OF A PIER OR PLATFORM, WHICHEVER INTERSECTION OCCURS FIRST. NO OBSTRUCTIONS ARE PERMITTED WITHIN A VISUAL CORRIDOR, EXCEPT AS SET FORTH IN SECTIONS 62-513 AND 62-60.	50'-0" MINIMUM VISUAL CORRIDOR	50'-0" VISUAL CORRIDOR PROVIDED	COMPLIES	L-001.00
62-513	PERMITTED OBSTRUCTIONS IN VISUAL CORRIDORS					
62-513		NO BUILDING OR OTHER STRUCTURE SHALL BE ERECTED WITHIN THE WIDTH OF A VISUAL CORRIDOR ABOVE ITS LOWEST LEVEL, AS ESTABLISHED PURSUANT TO SECTION 62-512, EXCEPT AS PROVIDED IN THIS SECTION. PERMITTED OBSTRUCTIONS WITHIN VISUAL CORRIDORS IN ALL DISTRICTS SHALL INCLUDE: A) PERMITTED OBSTRUCTIONS LISTED IN SECTION 62-611, PROVIDED THAT NO SHADE TREES SHALL BE PLANTED WITHIN 15 FEET OF THE CENTERLINE OF A VISUAL CORRIDOR, EXCEPT WHEN PROVIDED WITHIN AN OPEN PARKING LOT; B) PERMITTED OBSTRUCTIONS LISTED IN SECTION 23-44, AS MODIFIED FOR WATERFRONT YARDS IN SECTION 62-332; C) BOATS, SHIPS, OR OTHER VESSELS, AND FLOATING STRUCTURES PERMITTED BY PARAGRAPH (A) OF SECTION 62-25; D) ANY MOVING OR PARKED VEHICLES; E) STREET FURNITURE, INCLUDING BUT NOT LIMITED TO, CARTS AND OPEN DISPLAY BOOTHS; F) SWIMMING POOLS, PROVIDED NO PORTION PROJECTS MORE THAN 18 INCHES ABOVE THE LOWEST LEVEL OF A VISUAL CORRIDOR.	VISUAL CORRIDORS MAY ONLY CONTAIN PERMITTED OBSTRUCTIONS PER SECTION 62-513.	10' CLEAR PEDESTRIAN WALKWAY WITH BENCHES, PLANTER, PLANTER WITH TREE TO REMAIN, TREES, PLANTS, LITTER RECEPTACLES, LIGHT POLES ARE PROPOSED WITHIN THE VISUAL CORRIDOR	COMPLIES	L-001.00
62-53	REQUIREMENTS FOR SHORE PUBLIC WALKWAYS					
62-53 (A) (1)	LOCATION	SUCH SHORE PUBLIC WALKWAY SHALL HAVE A SEAWARD EDGE CONTIGUOUS WITH THE SEAWARD EDGE OF THE WATERFRONT YARD AS ESTABLISHED IN SECTION 62-332 (REAR YARDS AND WATERFRONT YARDS) WITH A MINIMUM WIDTH MEASURED FROM SUCH EDGE AS SET FORTH IN PARAGRAPH (A)(2) OF THIS SECTION, OR FOR FLOATING STRUCTURES, AS SET FORTH IN SECTION 62-55, UNLESS RELOCATION OR MODIFICATION OF WIDTH IS PERMITTED PURSUANT TO THIS SECTION;	SHORE PUBLIC WALKWAY EDGE MUST BE CONTIGUOUS WITH SEAWARD EDGE.	SHORE PUBLIC WALKWAY EDGE CONDITION IS CONTIGUOUS WITH SEAWARD EDGE OF WALLABOUT CHANNEL	COMPLIES	L-001.00
62-53 (A) (2)	WIDTH	SUCH SHORE PUBLIC WALKWAY SHALL HAVE A MINIMUM WIDTH OF 30 FEET FOR ZONING LOTS DEVELOPED WITH PREDOMINANTLY COMMUNITY FACILITY OR COMMERCIAL USES IN R3, R4, R5 AND C3 DISTRICTS, AND SUCH USES IN C1 AND C2 DISTRICTS MAPPED WITHIN R1 THROUGH R5 DISTRICTS. THE MINIMUM WIDTH FOR A SHORE PUBLIC WALKWAY PROVIDED FOR A ZONING LOT DEVELOPED WITH ANY USE IN ALL OTHER DISTRICTS, OTHER THAN R1 AND R2 DISTRICTS, SHALL BE 40 FEET.	SHORE PUBLIC WALKWAY MUST HAVE A MINIMUM WIDTH OF 30 FEET. THE MINIMUM WIDTH FOR A SHORE PUBLIC WALKWAY PROVIDED FOR A ZONING LOT DEVELOPED WITH ANY USE IN ALL OTHER DISTRICTS, OTHER THAN R1 AND R2 DISTRICTS, SHALL BE 40 FEET.	40 FOOT SHORE PUBLIC WALKWAY PROVIDED	COMPLIES	L-001.00
62-53 (A) (3)	WIDTH REDUCTION	THE MINIMUM WIDTH OF THE SHORE PUBLIC WALKWAY SET FORTH IN PARAGRAPH (A)(2) OF THIS SECTION MAY BE REDUCED AT THE FOLLOWING LOCATIONS PROVIDED NO SHORE PUBLIC WALKWAY IS REDUCED TO LESS THAN 10 FEET:	N/A	N/A	N/A	N/A
62-53 (A) (I)		ON SHALLOW PORTIONS OF ZONING LOTS THAT ARE LESS THAN 150 FEET IN DEPTH, THE MINIMUM WIDTH OF A SHORE PUBLIC WALKWAY MAY BE REDUCED BY ONE FOOT FOR EVERY TWO FEET THAT THE LOT DIMENSION, MEASURED FROM SUCH EDGE, IS LESS THAN 150 FEET;	N/A	N/A	N/A	N/A
62-53 (A) (II)		ON NARROW PORTIONS OF PLATFORMS THAT ARE LESS THAN 150 FEET IN DEPTH BETWEEN THE WATER EDGES LOCATED PERPENDICULAR TO THE LANDWARD EDGE OF SUCH PLATFORM, THE MINIMUM WIDTH OF SUCH SHORE PUBLIC WALKWAY ALONG EACH OPPOSITE EDGE MAY BE REDUCED BY ONE FOOT FOR EVERY TWO FEET THAT THE PLATFORM DIMENSIONS IS LESS THAN 150 FEET	N/A	N/A	N/A	N/A
62-53 (A) (III)		ON ZONING LOTS WHERE A TIDAL WETLAND AREA IS PROVIDED, THE WIDTH OF THE SHORE PUBLIC WALKWAY MAY BE REDUCED BY A FOOT FOR EVERY FOOT OF TIDAL WETLAND AREA ALONG THE SEAWARD EDGE OF THE WATERFRONT YARD UP TO SEVEN FEET. SUCH REDUCTION IN DEPTH SHALL NOT EXTEND ALONG MORE THAN 30 PERCENT OF THE SHORELINE OF THE WATERFRONT ZONING LOT.	N/A	N/A	N/A	N/A
62-53 (C)	ACCESSIBILITY FROM SIDEWALK AND ADJACENT ZONING LOTS	SHORE PUBLIC WALKWAYS SHALL BE ACCESSIBLE FROM A PUBLIC SIDEWALK WITHIN A STREET, PUBLIC PARK OR OTHER ACCESSIBLE OPEN PUBLIC PLACE, ACCORDING TO THE PROVISIONS OF SECTION 62-56 (REQUIREMENTS FOR UPLAND CONNECTIONS). SHORE PUBLIC WALKWAYS SHALL CONNECT WITH SHORE PUBLIC WALKWAYS ON ADJOINING ZONING LOTS.	SHORE PUBLIC WALKWAYS MUST BE ACCESSIBLE FROM A PUBLIC SIDEWALK.	SHORE PUBLIC WALKWAY IS ACCESSIBLE FROM DIVISION AVENUE	COMPLIES	L-001.00
62-56	REQUIREMENTS FOR UPLAND CONNECTIONS					
62-56	UPLAND CONNECTIONS	ALL WATERFRONT PUBLIC ACCESS AREAS PROVIDED PURSUANT TO SECTIONS 62-53 (REQUIREMENTS FOR SHORE PUBLIC WALKWAYS), 62-54 (REQUIREMENTS FOR PUBLIC ACCESS ON PIERS) OR 62-55 (REQUIREMENTS FOR PUBLIC ACCESS ON FLOATING STRUCTURES) SHALL BE ACCESSIBLE FROM AN OPEN STREET, PUBLIC PARK OR OTHER PUBLIC PLACE AT INTERVALS ALONG THE SHORE PUBLIC WALKWAY NOT TO EXCEED 600 FEET BY MEANS OF EITHER A DIRECT CONNECTION OR, WHERE NO DIRECT CONNECTION EXISTS, AN UPLAND CONNECTION BETWEEN THE SHORE PUBLIC WALKWAY AND AN ADJOINING PUBLIC SIDEWALK WITHIN AN OPEN STREET, PUBLIC PARK OR OTHER PUBLIC PLACE.	N/A	NO UPLAND CONNECTION REQUIRED	N/A	N/A
62-57	REQUIREMENTS FOR SUPPLEMENTAL PUBLIC ACCESS AREA					
62-57 (A)	AREA CALCULATIONS	IF THE AGGREGATE AREA OF THE REQUIRED SHORE PUBLIC WALKWAYS, UPLAND CONNECTIONS, PUBLIC ACCESS AREAS ON PIERS, AND PUBLIC ACCESS AREAS IN CONJUNCTION WITH FLOATING STRUCTURES ON THE ZONING LOT, IS LESS BY 750 SQUARE FEET OR MORE THAN THE AMOUNT OF WATERFRONT PUBLIC ACCESS AREA REQUIRED BY THE TABLE IN THIS SECTION, THEN SUPPLEMENTAL PUBLIC ACCESS AREAS SHALL BE PROVIDED IN ORDER TO MEET THE TOTAL AMOUNT OF WATERFRONT PUBLIC ACCESS AREA REQUIRED BY THE TABLE. HOWEVER, WHEN A ZONING LOT IS DEVELOPED PREDOMINANTLY AS A PLAYGROUND OR PUBLICLY ACCESSIBLE PRIVATE PARK, THE REQUIREMENTS OF THIS SECTION SHALL BE DEEMED TO BE SATISFIED BY SUCH USE.	LOT AREA: 115,244 SF TOTAL WPAA REQUIRED (20% OF R8) = 23,049 SF	TOTAL WPAA PROVIDED: SHORE PUBLIC WALKWAY AREA: 20,466 SF SUPPLEMENTAL PUBLIC ACCESS AREAS: 2,714 SF TOTAL WPAA (SPW+SPAA): 23,180 SF	COMPLIES	L-001.00
62-57 (B)	SPAA IN WETLANDS	WHERE SUPPLEMENTAL PUBLIC ACCESS AREAS ARE REQUIRED WITHIN NEW YORK STATE-DESIGNATED WETLANDS OR ADJACENT STATE-REGULATED AREAS, THE AREA REQUIREMENTS AND THE DESIGN STANDARDS FOR SUCH SUPPLEMENTAL PUBLIC ACCESS AREAS MAY BE REDUCED OR MODIFIED BY THE NEW YORK STATE DEPARTMENT OF ENVIRONMENTAL CONSERVATION.	N/A	N/A	N/A	N/A
62-57 (C)	DISTRICT BOUNDARY	WHENEVER A ZONING LOT IS DIVIDED BY A BOUNDARY BETWEEN DISTRICTS IN WHICH DIFFERENT THRESHOLDS APPLY PURSUANT TO THE TABLE IN THIS SECTION, THE WATERFRONT PUBLIC ACCESS AREA REQUIREMENT SHALL BE MET FOR THE ENTIRE ZONING LOT, PROVIDED THAT:	N/A	N/A	N/A	N/A
62-57 (C) (1)		THE LOT AREA OR LENGTH OF SHORELINE IN EITHER DISTRICT IS LESS THAN THE MINIMUM THRESHOLD FOR WHICH THERE IS A TOTAL WATERFRONT PUBLIC ACCESS AREA REQUIREMENT	N/A	N/A	N/A	N/A
62-57 (C) (2)		THE TOTAL LOT AREA OR LENGTH OF SHORELINE FOR THE ENTIRE ZONING LOT IS GREATER THAN THE LOWEST THRESHOLD IN EITHER DISTRICT FOR WHICH THERE IS A TOTAL WATERFRONT PUBLIC ACCESS AREA REQUIREMENT.	N/A	N/A	N/A	N/A
62-571	LOCATION AND AREA REQUIREMENTS FOR SUPPLEMENTAL PUBLIC ACCESS AREAS					
62-571		SUPPLEMENTAL PUBLIC ACCESS AREAS SHALL ADJOIN A SHORE PUBLIC WALKWAY IN ACCORDANCE WITH THE REQUIREMENTS OF THIS SECTION, EXCEPT AS MODIFIED BY PARAGRAPHS (A) AND (B) OF SECTION 62-57, AND THE PROVISIONS OF THIS SECTION:	A SUPPLEMENTAL PUBLIC ACCESS AREA MUST ADJOIN A SHORE PUBLIC WALKWAY.	SUPPLEMENTAL PUBLIC ACCESS AREA ADJOINS SHORE PUBLIC WALKWAY	COMPLIES	L-001.00
62-571 (A) (1)	MINIMUM AREA	THE MINIMUM AREA OF THE SUPPLEMENTAL PUBLIC ACCESS AREA: 1) WHEN LOCATED AT THE INTERSECTION OF A SHORE PUBLIC WALKWAY AND AN UPLAND CONNECTION OR STREET, SHALL BE 750 SF, AND HAVE A MINIMUM WIDTH TO DEPTH RATIO OF 1:1 AND A MAXIMUM WIDTH TO DEPTH RATIO OF 3:1. THE LONGEST SIDE SHALL ADJOIN THE SHORE PUBLIC WALKWAY;	N/A	N/A	N/A	N/A
62-571 (A) (2)		THE MINIMUM AREA OF THE SUPPLEMENTAL PUBLIC ACCESS AREA: 2) WHEN LOCATED ADJOINING A SHORE PUBLIC WALKWAY WITHOUT ADJOINING AN UPLAND CONNECTION OR STREET, SHALL BE 1,875 SQUARE FEET AND HAVE A MINIMUM WIDTH TO DEPTH RATIO OF 3:1. THE MINIMUM DEPTH PERPENDICULAR TO THE SHORE PUBLIC WALKWAY, AS A WEIGHTED AVERAGE, SHALL BE 25 FEET	A SUPPLEMENTAL PUBLIC ACCESS AREA MUST BE AT LEAST 1,875 SF AND HAVE A MINIMUM WIDTH TO DEPTH RATIO OF 3:1. THE MINIMUM DEPTH PERPENDICULAR TO THE SHORE PUBLIC WALKWAY SHALL BE AT LEAST 25 FEET.	TOTAL AREA: 2,714 SF AVERAGE WIDTH: 65'-3" AVERAGE DEPTH: 29'-6" AVERAGE WIDTH TO DEPTH RATIO: 2.2:1	COMPLIES	L-001.00
62-571 (B) (1)	WIDENING OF SHORE PUBLIC WALKWAY	A SUPPLEMENTAL PUBLIC ACCESS AREA MAY BE PROVIDED: 1) TO WIDEN THE SHORE PUBLIC WALKWAY, WITH A MINIMUM WIDTH OF 10 FEET RUNNING CONTINUOUSLY ALONG THE SHORE PUBLIC WALKWAY BETWEEN ANY TWO OF THE FOLLOWING: AN UPLAND CONNECTION, OPEN STREET, PUBLIC PARK OR OTHER PUBLIC PLACE;	N/A	N/A	N/A	N/A
62-571 (B) (2)	AS A PEDESTRIAN SIDEWALK	A SUPPLEMENTAL PUBLIC ACCESS AREA MAY BE PROVIDED: 2) AS A PEDESTRIAN SIDEWALK AREA ABUTTING A ROADBED RUNNING ALONG THE SHORELINE, PROVIDED SUCH SIDEWALK HAS A MINIMUM WIDTH OF 13 FEET AND COMPLIES WITH THE PROVISIONS FOR A TYPE 2 UPLAND CONNECTION PURSUANT TO SECTION 62-64. ANY ADDITIONAL SUPPLEMENTAL PUBLIC ACCESS AREA SHALL COMPLY WITH THE REQUIREMENTS OF THIS SECTION; OR	N/A	N/A	N/A	N/A
62-571 (B) (3)	AS A BIKE PATH	A SUPPLEMENTAL PUBLIC ACCESS AREA MAY BE PROVIDED: 3) AS A DEDICATED BICYCLE PATH IF SUCH PATH CONNECTS AT EACH END TO AN OPEN STREET. THE MINIMUM WIDTH OF A BICYCLE PATH SHALL BE 10 FEET, WITH AN ADDITIONAL TWO FOOT CLEARANCE ON EACH SIDE ALONG THE ENTIRE LENGTH OF THE PATH. THERE SHALL BE A PLANTED AREA BETWEEN A BICYCLE PATH AND A PAVED AREA FOR PEDESTRIAN USE, PURSUANT TO THE REQUIREMENTS OF PARAGRAPH (C) OF SECTION 62-62.	N/A	N/A	N/A	N/A
62-61	GENERAL PROVISIONS APPLYING TO WATERFRONT PUBLIC ACCESS AREA					
62-61		WATERFRONT PUBLIC ACCESS AREAS SHALL BE UNOBSTRUCTED FROM THEIR LOWEST LEVEL TO THE SKY EXCEPT THAT THE OBSTRUCTIONS LISTED IN THIS SECTION SHALL BE PERMITTED, AS APPLICABLE. HOWEVER, NO OBSTRUCTIONS OF ANY KIND SHALL BE PERMITTED WITHIN A REQUIRED CIRCULATION PATH, EXCEPT AS SPECIFICALLY SET FORTH HEREIN.	N/A	N/A	N/A	N/A
62-61 (A)	ELEVATED OBSTRUCTIONS	ALL WATERFRONT PUBLIC ACCESS ARES SHALL BE UNOBSTRUCTED FROM THEIR LOWEST LEVEL TO THE SKY. THE LOWEST LEVEL OF ANY PORTION OF A WATERFRONT PUBLIC ACCESS AREA SHALL BE DETERMINED BY THE ELEVATION OF THE ADJOINING PORTION ON THE SAME OR ADJOINING ZONING LOT OR THE PUBLIC SIDEWALK TO WHICH IT CONNECTS. REFERENCE ELEVATIONS SHALL BE ESTABLISHED FROM THE PUBLIC SIDEWALKS, WATERFRONT YARD LEVELS AND THE ELEVATIONS PREVIOUSLY ESTABLISHED BY ADJOINING ZONING LOTS AT LOT LINE INTERSECTIONS OF A WATERFRONT PUBLIC ACCESS NETWORK, AS APPLICABLE	ALL WATERFRONT PUBLIC ACCESS AREAS SHALL BE UNOBSTRUCTED FROM THEIR LOWEST LEVEL TO THE SKY.	NO UN-PERMITTED OBSTRUCTIONS PROVIDED	COMPLIES	L-001.00



OWNER
KENT MEMBER LLC
505 FLUSHING AVE, BROOKLYN, NY 11205

CIVIL / PARKING ENGINEER
PHILIB HABIB AND ASSOCIATES
102 MADISON AVE # 11, NEW YORK, NY 10016

LANDSCAPE ARCHITECT
MPFP
120 BROADWAY 20TH FL, NEW YORK, NY 10271

LIGHTING DESIGNER
ONE LUX STUDIO
158 WEST 29TH STREET, FL 10, NEW YORK, NY 10001

LAND USE CONSULTANT
HERRICK FEINSTEIN LLP
TWO PARK AVENUE, NEW YORK, NY 10016

REV	DATE	DESCRIPTION
	3/24/2021	ULURP SUBMISSION
	11/03/2021	ULURP SUBMISSION
	06/22/2022	ULURP SUBMISSION
	09/08/2022	ULURP SUBMISSION
	01/11/2023	DPR REVIEW
	03/22/2023	ULURP SUBMISSION

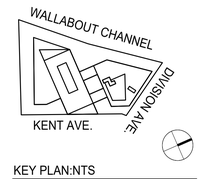

KEY PLAN:NTS

500 KENT

500 KENT AVENUE
BROOKLYN, NY 11249
ID #2019K0330

WATERFRONT PUBLIC ACCESS AREA ZONING CALCULATIONS

SCALE:

DRAWING #:
Z-01 .00
___ of ___

DOB JOB:

3/22/2021 7:28:54 PM © MARVEL ARCHITECTS, PLLC 2018

ZONING SECTION	ITEM	ZONING RESOLUTION	REQUIRED	PROVIDED	COMPLIANCE	DWG REF
62-61 (B)	CONTIGUOUS CIRCULATION PATHS	THE MINIMUM REQUIRED CIRCULATION PATH SHALL BE CONNECTED AND CONTINUOUS THROUGH ALL WATERFRONT PUBLIC ACCESS AREAS ON ADJACENT ZONING LOTS	ALL WATERFRONT PUBLIC ACCESS AREA CIRCULATION PATHS SHALL BE CONTINUOUS	ALL PROVIDED WATERFRONT PUBLIC ACCESS AREA CIRCULATION PATHS ARE CONTINUOUS	COMPLIES	N/A
62-61 (C)	ACCESSIBILITY	WATERFRONT PUBLIC ACCESS AREAS SHALL BE ACCESSIBLE TO PERSONS WITH PHYSICAL DISABILITIES IN ACCORDANCE WITH THE AMERICANS WITH DISABILITIES ACT AND THE AMERICAN NATIONAL STANDARDS INSTITUTE (ANSI) DESIGN GUIDELINES.	ALL WATERFRONT PUBLIC ACCESS AREAS SHALL COMPLY WITH ADA AND ANSI GUIDELINES	ALL PROVIDED WATERFRONT PUBLIC ACCESS AREAS COMPLY WITH ADA AND ANSI GUIDELINES	COMPLIES	L-200.00
62-61 (D) (1) (I)	SITE GRADING	IN REQUIRED CIRULATION PATHS: FOR CROSS-SECTIONAL GRADING REGULATIONS (PERPENDICULAR TO THE GENERAL DIRECTION OF PEDESTRIAN MOVEMENT), THE MINIMUM SLOPE OF A REQUIRED CIRCULATION PATH SHALL BE ONE AND ONE-HALF PERCENT TO ALLOW FOR POSITIVE DRAINAGE AND THE MAXIMUM SLOPE SHALL BE THREE PERCENT. STEPS AND STAIRWAYS ACCOMMODATING A CROSS-SECTIONAL GRADE CHANGE ARE ONLY PERMITTED OUTSIDE OF THE REQUIRED CIRCULATION PATH(S).	ALL CIRCULATION PATHS SHALL HAVE A MINIMUM CROSS SLOPE OF 1.50% AND A MAXIMUM CROSS SLOPE OF 3.00%	ALL PROVIDED CROSS SLOPES RANGE BETWEEN 1.5% AND 3%	COMPLIES	L-200.00
62-61 (D) (1) (II)		FOR LONGITUDINAL GRADING CONTROLS (PARALLEL TO THE GENERAL DIRECTION OF PEDESTRIAN MOVEMENT), GRADE CHANGES SHALL BE PERMITTED ALONG THE LENGTH OF A REQUIRED CIRCULATION PATH BY MEANS OF STEPS OR RAMPS IN COMPLIANCE WITH THE REQUIREMENTS FOR HANDICAPPED ACCESSIBILITY.	LONGITUDINAL SLOPES MUST COMPLY WITH REQUIREMENTS FOR HANDICAPPED ACCESSIBILITY.	LONGITUDINAL SLOPES COMPLY WITH HANDICAPPED ACCESSIBILITY	COMPLIES	L-200.00
62-61 (D) (2)	SITE GRADING IN PLANTING AREAS	IN REQUIRED PLANTING AREAS, INCLUDING SCREENING BUFFERS: WITHIN THREE FEET OF THE EDGE OF ANY PLANTING AREA, THE GRADE LEVEL OF SUCH PLANTING AREA SHALL BE NO MORE THAN THREE FEET HIGHER OR LOWER THAN THE ADJOINING LEVEL OF THE PEDESTRIAN CIRCULATION PATH.	NO PLANTING AREA SHALL BE HIGHER THAN 3 FEET ABOVE FINISHED GRADE AND SHALL NOT BE LOWER THAN THE ADJOINING CIRCULATION PATH	NO PROVIDED PLANTING AREA HIGHER THAN 3 FEET ABOVE FINISHED GRADE	COMPLIES	L-200.00
62-61 (E)	VEHICLE AND EMERGENCY ACCESS	VEHICULAR ACCESS IS PROHIBITED WITHIN WATERFRONT PUBLIC ACCESS AREAS EXCEPT FOR EMERGENCY AND MAINTENANCE VEHICULAR ACCESS. PARKING AREAS, PASSENGER DROP-OFFS, DRIVEWAYS, LOADING BERTHS AND BUILDING TRASH STORAGE FACILITIES ARE NOT PERMITTED WITHIN, OR ALLOWED TO BE ACCESSED OR SERVICED THROUGH, A WATERFRONT PUBLIC ACCESS AREA, EXCEPT FOR VEHICULAR ACCESS TO DROP-OFFS AND OTHER REQUIRED SERVICES ACCESSORY TO DOCKING FACILITIES OR TO DEVELOPMENT ON A PIER OR FLOATING STRUCTURE. SUCH VEHICULAR WAYS SHALL BE USED ONLY TO PROVIDE ACCESS ACROSS THE SHORE PUBLIC WALKWAY. NO SINGLE DRIVEWAY SHALL EXCEED A WIDTH OF 25 FEET. BOLLARDS SHALL BE INSTALLED IN ACCORDANCE WITH SECTION 62-651. A MINIMUM 12 INCH PAVED BORDER SHALL BE INSTALLED ALONG THE DRIVEWAY BOUNDARIES AND SHALL HAVE A COLOR DISTINCT FROM THE PAVING OF THE ADJOINING PAVED SURFACE. VEHICULAR ROADWAYS ARE PERMITTED AS PART OF AN UPLAND CONNECTION IN ACCORDANCE WITH THE REGULATIONS OF SECTION 62-56. ANY VEHICULAR ROADWAY CROSSING A REQUIRED WATERFRONT PUBLIC ACCESS AREA SHALL COMPLY WITH THE REQUIREMENTS FOR PAVING IN SECTION 62-656.	VEHICULAR ACCESS IS PROHIBITED WITHIN WATERFRONT PUBLIC ACCESS AREAS EXCEPT FOR EMERGENCY AND MAINTENANCE VEHICULAR ACCESS	NO VEHICULAR ACCESS EXCEPT FOR EMERGENCY AND MAINTENANCE VEHICLES	COMPLIES	N/A
62-611	PERMITTED OBSTRUCTIONS					
62-611		WATERFRONT PUBLIC ACCESS AREAS SHALL BE UNOBSTRUCTED FROM THEIR LOWEST LEVEL TO THE SKY EXCEPT THAT THE OBSTRUCTIONS LISTED IN THIS SECTION SHALL BE PERMITTED, AS APPLICABLE. HOWEVER, NO OBSTRUCTIONS OF ANY KIND SHALL BE PERMITTED WITHIN A REQUIRED CIRCULATION PATH.	ONLY PERMITTED OBSTRUCTIONS SHALL BE PROVIDED WITHIN WATERFRONT PUBLIC ACCESS AREAS	ONLY PERMITTED OBSTRUCTIONS PROVIDED	COMPLIES	N/A
62-611 (A)	PERMITTED OBSTRUCTIONS IN ALL AREAS	IN ALL AREAS: 1) TREES AND OTHER PLANT MATERIALS, INCLUDING GRASSES, VINES, SHRUBS, AND FLOWERS, WATERING EQUIPMENT, ARBORS, TRELLISES, OBSERVATION DECKS, RETAINING WALLS; 2) SEATING, LITTER RECEPTACLES, DRINKING FOUNTAINS, OTHER OUTDOOR FURNITURE; 3) FOUNTAINS, REFLECTING POOLS, WATERFALLS, SCULPTURES AND OTHER WORKS OF ART, TEMPORARY EXHIBITIONS; 4) GUARDRAILS, BOLLARDS, GATES AND OTHER PROTECTIVE BARRIERS; 5) LIGHTS AND LIGHTING STANCHIONS, FLAG POLES, EXERCISE AND OTHER RECREATIONAL EQUIPMENT; 6) KIOSKS AND OPEN AIR CAFES; 7) STRUCTURAL LANDSCAPED BERMS AND ASSOCIATED FLOOD GATES, PROVIDED THE HEIGHT OF SUCH BERM DOES NOT EXCEED THE FLOOD RESISTANT CONSTRUCTION ELEVATION REQUIRED ON THE ZONING LOT OR FIVE FEET ABOVE THE LOWEST ADJOINING GRADE OF THE WATERFRONT YARD ESTABLISHED, WHICHEVER IS HIGHER; 8) TEMPORARY FLOOD CONTROL DEVISES AND ASSOCIATED PERMANENT FIXTURES, INCLUDING EMERGENCY EGRESS SYSTEMS THAT ARE ASSEMBLED PRIOR TO A STORM AND REMOVED THEREAFTER. PERMANENT FIXTURES FOR SELF-STANDING FLOOD CONTROL DEVISES SHALL BE FLUSH TO GRADE, AND SHALL BE PERMITTED OBSTRUCTIONS WITHIN A REQUIRED CIRCULATION PATH.	N/A	ONLY PERMITTED OBSTRUCTIONS PROVIDED	COMPLIES	N/A
62-611 (B)	PERMITTED OBSTRUCTIONS IN SCREENING BUFFERS	IN SCREENING BUFFERS: 1) PAVED ENTRANCES TO BUILDINGS FRONTING UPON A SCREENING BUFFER, INCLUDING AWNINGS AND CANOPIES OVER SUCH ENTRANCES, SEATING LOCATED WITHIN 42 INCHES OF AN ADJACENT PAVED AREA, BICYCLE RACKS WITHIN SIX FEET OF THE SIDEWALK OF AN OPEN ACCESSIBLE STREET OR WITHIN 10 FEET OF AN UPLAND CONNECTION; 2) SERVICE EQUIPMENT NECESSARY FOR MAINTENANCE OF WATERFRONT PUBLIC ACCESS AREAS OF THE FUNCTIONING OF ADJACENT STRUCTURES SUCH AS WATERING EQUIPMENT, SHEDS FOR TOOL STORAGE, ELECTRICAL TRANSFORMERS OR OTHER MECHANICAL OR ELECTRICAL SERVICE DEVICES, PROVIDED ALL SUCH EQUIPMENT COVERS NO MORE THAN 100 SQUARE FEET IN ANY LOCATION AND HAS A MAXIMUM HEIGHT OF 10 FEET; 3) EXHAUST VENTS LOCATED ON BUILDING WALLS FRONTING ON THE SCREENING BUFFER, ONLY IF THE BUFFER OF SUCH VENT IS A MINIMUM OF 10 FEET ABOVE THE ADJACENT GROUND LEVEL AND PROJECTS NO MORE THAN FOUR INCHES FROM THE BUILDING WALL.	N/A	ONLY PERMITTED OBSTRUCTIONS PROVIDED	COMPLIES	N/A
62-611 (C)	PERMITTED OBSTRUCTIONS BEYOND 20'-0" OF SHORELINE	BEYOND 20 FEET OF THE SHORELINE: TOT-LOTS, PLAYGROUNDS, DOG RUNS, PUBLIC TELEPHONES, TOILETS, BICYCLE RACKS.	N/A	ONLY PERMITTED OBSTRUCTIONS PROVIDED	COMPLIES	N/A
62-62	DESIGN REQUIREMENTS FOR SHORE PUBLIC WALKS AND SUPPLEMENTAL ACCESS AREAS					
62-62		THE DESIGN REQUIREMENTS OF THIS SECTION SHALL APPLY TO SHORE PUBLIC WALKWAYS AND SUPPLEMENTAL PUBLIC ACCESS AREAS.	N/A	N/A	N/A	N/A
62-62 (A) (1)	SHORE PUBLIC WALKWAY CIRCULATION PATH MINIMUM WIDTH AND PROXIMITY TO SHORELINE	CIRCULATION AND ACCESS: 1) IN ALL DISTRICTS, A SHORE PUBLIC WALKWAY SHALL PROVIDE A CIRCULATION PATH WITH A MINIMUM CLEAR WIDTH OF 12 FEET, EXCEPT THAT IN R3, R4, R5, C1, C2, AND C3 DISTRICTS, AND IN C1 OR C2 DISTRICTS MAPPED WITHIN R1 THROUGH R5 DISTRICTS, THE MINIMUM CLEAR WIDTH SHALL BE 10 FEET. SUCH PATH SHALL BE LOCATED WITHIN 10 FEET OF THE SHORELINE FOR AT LEAST 20 PERCENT OF THE LENGTH OF SUCH SHORELINE, AND THE REMAINDER OF THE PATH MAY BE LOCATED ANYWHERE WITHIN THE SHORE PUBLIC WALKWAY OR SUPPLEMENTAL PUBLIC ACCESS AREA. SECONDARY PATHS, WHEN PROVIDED, SHALL BE AT LEAST 6 FEET WIDE. WHEN TWO CIRCULATION PATHS ARE PARALLEL TO EACH OTHER, THEY SHALL BE CONNECTED BY OTHER PATHS OR ACCESSIBLE LAWN AT INTERVALS NOT TO EXCEED 200 FEET. IN ORDER TO FACILITATE THE FUTURE CONNECTION OF PEDESTRIAN CIRCULATION PATHS, WHERE A SHORE PUBLIC WALKWAY IS ON A ZONING LOT THAT IS ADJACENT TO A ZONING LOT WITHIN A SHORE PUBLIC WALKWAY, THE PROPORTION OF THE CIRCULATION PATH THAT TERMINATES AT THE COMMON ZONING LOT LINE SHALL BE LOCATED WITHIN 30 FEET OF THE SHORELINE.	SHORE PUBLIC WALKWAYS SHALL PROVIDE A 12 FOOT MINIMUM CLEAR CIRCULATION PATH AND SUCH PATH SHALL BE LOCATED WITHIN 10 FEET OF THE SHORELINE FOR AT LEAST 20 PERCENT OF THE LENGTH OF THE SHORELINE. SECONDARY PATHS SHALL BE AT LEAST 6 FEET WIDE.	12 FOOT MINIMUM CLEAR CIRCULATION PATH PROVIDED TOTAL LENGTH OF SHORELINE = 523 FEET X 20 PERCENT = 104,5 REQUIRED WITHIN 10 FEET OF SHORELINE 253 FEET OF CIRCULATION PATH PROVIDED WITHIN 10' OF SHORELINE, GET DOWN INCLUDED. 6 FOOT CLEAR MINIMUM SECONDARY CIRCULATION PATH PROVIDED	COMPLIES	L-100.00
62-62 (A) (2)	SUPPLEMENTAL ACCESS AREA CIRCULATION PATH MINIMUM WIDTH	2) A SUPPLEMENTAL PUBLIC ACCESS AREA SHALL PROVIDE AT LEAST ONE CIRCULATION PATH WITH A MINIMUM CLEAR WIDTH OF SIX FEET THAT PROVIDES ACCESS THROUGHOUT THE SUPPLEMENTAL PUBLIC ACCESS AREA	SUPPLEMENTAL PUBLIC ACCESS AREA SHALL PROVIDE A 6 FOOT CLEAR MINIMUM CIRCULATION PATH	6 FOOT CLEAR MINIMUM SECONDARY CIRCULATION PATH PROVIDED	COMPLIES	L-100.00
62-62 (B)	SEATING	ONE LINEAR FOOT OF SEATING SHALL BE PROVIDED FOR EVERY 75 SQUARE FEET OF SHORE PUBLIC WALKWAY AND SUPPLEMENTAL PUBLIC ACCESS AREA. SUCH SEATING MAY BE LOCATED ANYWHERE WITHIN SUCH PUBLIC ACCESS AREAS AND SHALL COMPLY WITH THE STANDARDS OF SECTION 62-652. IN ADDITION, UP TO 25 PERCENT OF REQUIRED SEATING MAY BE LOCATED SEAWARD OF THE SHORE PUBLIC WALKWAY AND SHALL BE SUBJECT TO THE PROVISIONS OF SECTION 62-652, PARAGRAPH (H).	SHORE PUBLIC WALKWAY AND SUPPLEMENTAL PUBLIC ACCESS AREA SHALL PROVIDE ONE LINEAR FOOT OF SEATING FOR EVERY 75 SF OF SHORE PUBLIC WALKWAY AND SUPPLEMENTAL PUBLIC ACCESS TOTAL REQUIRED SEATING: 23,180 SF / 75 SF = 309 LF OF SEATING	TOTAL SEATING PROVIDED: 369.684 LF OF SEATING	COMPLIES	L-401.00 & L-402.00
62-62 (C) (1)	PLANTING AREAS	1) PLANTING AREAS: AN AREA EQUAL TO AT LEAST 35 PERCENT OF THE AREA OF THE SHORE PUBLIC WALKWAY AND SUPPLEMENTAL PUBLIC ACCESS AREA SHALL BE PLANTED.	AT LEAST 35 PERCENT OF THE SHORE PUBLIC WALKWAY AND SUPPLEMENTAL PUBLIC ACCESS AREA SHALL BE PLANTED. TOTAL REQUIRED PLANTING: 23,180 SF X 35% = 8,113 SF OF PLANTING	TOTAL PLANTING PROVIDED: 8,632.38 SF (37.24% OF 23,180 SF)	COMPLIES	L-300.00 & L-301.00
62-62 (C) (1) (I)	LAWN AREA	I) WHERE A SUPPLEMENTAL PUBLIC ACCESS AREA IS GREATER THAN 1,875 SQUARE FEET, AT LEAST 15 PERCENT OF THE REQUIRED PLANTING AREA OF THE SHORE PUBLIC WALKWAY AND SUPPLEMENTAL PUBLIC ACCESS AREA #, COMBINED, SHALL BE PROVIDED AS LAWN	AT LEAST 15 PERCENT OF THE SHORE PUBLIC WALKWAY AND SUPPLEMENTAL PUBLIC ACCESS AREA PLANTING AREA SHALL BE PROVIDED AS LAWN AREA TOTAL REQUIRED LAWN: 8,113 SF X 15% = 1,216.95 SF OF LAWN AREA	TOTAL PROVIDED LAWN AREA: 2,305.73 SF (28.40% OF 8,113 SF)	COMPLIES	L-300.00 & L-301.00
62-62 (C) (1) (II)	PLANTING SEAWARD OF SHORE PUBLIC WALKWAY	II) UP TO 15 PERCENT OF THE REQUIRED PLANTING AREA MAY BE LOCATED SEAWARD OF A SHORE PUBLIC WALKWAY AND SHALL BE MEASURED IN PLAN VIEW AND NOT ALONG THE PLANTED SLOPE; OR	N/A	N/A	N/A	N/A
62-62 (C) (1) (III)	BIKE PATH AND PLANTING	III) WHEN A DEDICATED BICYCLE PATH IS PROVIDED WITHIN A SUPPLEMENTAL PUBLIC ACCESS AREA, A PLANTING AREA WITH A WIDTH OF AT LEAST FIVE FEET SHALL BE PROVIDED BETWEEN THE BICYCLE PATH AND ANY PAVED AREA FOR PEDESTRIAN USE. FOR THE PURPOSE OF CALCULATING PLANTING REQUIREMENTS, THE AREA OF THE BICYCLE PATH MAY BE DEDUCTED FROM THE COMBINED AREA OF THE SHORE PUBLIC WALKWAY OR SUPPLEMENTAL PUBLIC ACCESS AREA.	N/A	N/A	N/A	N/A
62-62 (C) (2) (I)	SCREENING BUFFER REQUIREMENTS	I) A SCREENING BUFFER SHALL BE PROVIDED WITHIN THE SHORE PUBLIC WALKWAY OR THE SUPPLEMENTAL PUBLIC ACCESS AREA, RUNNING ALONG THE ENTIRE UPLAND BOUNDARY OF SUCH AREA WHERE IT ABUTS NON-PUBLICLY ACCESSIBLE AREAS OF THE ZONING LOT, EXCEPT AS WAIVED PURSUANT TO PARAGRAPH (C) (2)(III) OR THIS SECTION. ANY SCREENING BUFFER PROVIDED PURSUANT TO THIS SECTION MAY BE USED TO MEET THE PLANTING REQUIREMENTS OF PARAGRAPH (C)(1) OF THIS SECTION.	N/A	N/A	N/A	N/A
62-62 (C) (2) (II)	SCREENING BUFFER MINIMUM WIDTH	II) THE MINIMUM WIDTH OF THE SCREENING BUFFER SHALL BE 6 FEET. ON SHALLOW LOTS WHERE THE WIDTH OF THE SHORE PUBLIC WALKWAY MAY BE REDUCED PURSUANT TO SECTION 62-53, THE WIDTH OF THE SCREENING BUFFER MAY BE REDUCED PROPORTIONALLY BUT SHALL NOT BE LESS THAN 4 FEET.	N/A	N/A	N/A	N/A
62-62 (C) (2) (III)	SCREENING BUFFER EXEMPTIONS	III) NO SCREENING BUFFER SHALL BE REQUIRED: A) ADJACENT TO A PRIVATE DRIVE, A STREET, OR AT THE ENTRANCES TO BUILDINGS; B) FOR A COMMERCIAL OR COMMUNITY FACILITY USE WITHIN A DISTANCE OF 15 FEET FROM THE SIDEWALK OR WATERFRONT PUBLIC ACCESS AREA, TTHAT IS GLAZED WITH WINDOWS, TRANSOMS OR GLAZED PORTIONS OF DOORS IN ACCORDANCE WITH THE PROVISIONS OF SECTION 37-34 (MINIMUM TRANSPARENCY REQUIREMENTS).	N/A	N/A	N/A	N/A
62-62 (C) (3) (I)	CANOPY TREES	A MINIMUM OF ONE CANOPY TREE SHALL BE PROVIDED FOR EVERY 2,000 SQUARE FEET OF SHORE PUBLIC WALKWAY AND SUPPLEMENTAL PUBLIC ACCESS AREA. IN NO EVENT MAY A SHORE PUBLIC WALKWAY HAVE LESS THAN TWO CANOPY TREES FOR EVERY 100 FEET OF SHORELINE. REQUIRED: 23,180 SF / 2,000 SF = 12 TREES REQUIRED	ONE CANOPY TREE SHALL BE PROVIDED FOR EVERY 2,000 SF OF SHORE PUBLIC WALKWAY AND SUPPLEMENTAL PUBLIC ACCESS AREA TOTAL REQUIRED CANOPY TREES: 23,180 SF / 2,000 SF = 12 CANOPY TREES REQUIRED	TOTAL PROVIDED CANOPY TREES: 17 CANOPY TREES PROVIDED	COMPLIES	L-300.00 & L-301.00
62-62 (C) (3) (II)	ADDITIONAL PLANTING	IN ADDITION TO THE TREES REQUIRED PURSUANT TO PARAGRAPH (C)(3)(I) OF THIS SECTION, FOR EVERY 1,250 SQUARE FEET OF SHORE PUBLIC WALKWAY AND SUPPLEMENTAL PUBLIC ACCESS AREA, ONE OF THE FOLLOWING MUST BE PROVIDED: A CANOPY TREE, AN ORNAMENTAL TREE OR A MULTI-STEMMED EQUIVALENT, 60 SQUARE FEET OF PLANTING BEDS OR 110 SQUARE FEET OF ACCESSIBLE LAWN. REQUIRED: 23,180 SF / 1,250 SF = 19 ADDITIONAL TREES REQUIRED	A CANOPY TREE, AND ORNAMENTAL TREE, OR A MULTI-STEMMED EQUIVALENT, 60 SF OF PLANTINGS BEDS, OR 110 SF OF ACCESSIBLE LAWN SHALL BE PROVIDED FOR EVERY 1,250 SF OF SHORE PUBLIC WALKWAY AND SUPPLEMENTAL PUBLIC ACCESS AREA TOTAL REQUIRED ADDITIONAL TREES: 23,180 SF / 1,250 SF = 19 ADDITIONAL TREES REQUIRED	TOTAL PROVIDED ADDITIONAL TREES: 27 ADDITIONAL TREES, 27 ORNAMENTAL TREES & 17 CANOPY TREES PROPOSED	COMPLIES	L-300.00 & L-301.00



OWNER
KENT MEMBER LLC
505 FLUSHING AVE, BROOKLYN, NY 11205

CIVIL / PARKING ENGINEER
PHILIB HABIB AND ASSOCIATES
102 MADISON AVE # 11, NEW YORK, NY 10016

LANDSCAPE ARCHITECT
MPFP
120 BROADWAY 20TH FL, NEW YORK, NY 10271

LIGHTING DESIGNER
ONE LUX STUDIO
158 WEST 29TH STREET, FL 10, NEW YORK, NY 10001

LAND USE CONSULTANT
HERRICK FEINSTEIN LLP
TWO PARK AVENUE, NEW YORK, NY 10016

REV	DATE	DESCRIPTION
	3/24/2021	ULURP SUBMISSION
	11/03/2021	ULURP SUBMISSION
	06/22/2022	ULURP SUBMISSION
	09/08/2022	ULURP SUBMISSION
	01/11/2023	DPR REVIEW
	03/22/2023	ULURP SUBMISSION

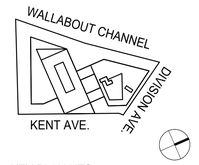

KEY PLAN:NTS

500 KENT

500 KENT AVENUE
BROOKLYN, NY 11249

ID #2019K0330

WATERFRONT PUBLIC ACCESS AREA ZONING CALCULATIONS

SCALE:

DRAWING #:
Z-02 .00
___ of ___

DOB JOB:

3/22/2021 7:28:54 PM

© MARVEL ARCHITECTS, PLLC 2019

ZONING SECTION	ITEM	ZONING RESOLUTION	REQUIRED	PROVIDED	COMPLIANCE	DWG REF
62-62 (C) (4)	REDUCTION IN MINIMUM REQUIRED PLANTING AREA	THE MINIMUM PLANTING AREA, REQUIRED BY PARAGRAPH (C)(1) OF THIS SECTION, MAY BE REDUCED BY 10 SQUARE FEET FOR EVERY LINEAR FOOT OF:	N/A	N/A	N/A	N/A
62-62 (C) (4) (I)		SHORELINE IMPROVED FOR BOAT LAUNCHING OR MOORING OR DESIGNED WITH ARCHITECTURAL FEATURES TO FACILITATE DIRECT ACCESS TO THE WATER, SUCH AS STEPS OR OTHER FORMS OF "GET-DOWNS," EXCEPT THAT RIP-RAP USED AS STABILIZED SHORE SHALL NOT QUALIFY FOR A PLANTING REDUCTION; OR	N/A	N/A	N/A	N/A
62-62 (C) (4) (II)		WE USES WITH FRONTAGE ADJOINING, AND HAVING A PUBLIC ENTRANCE ON, THE SHORE PUBLIC WALKWAY OR SUPPLEMENTAL PUBLIC ACCESS AREA, PROVIDED THAT THE SCREENING BUFFER FOR SUCH SHORE PUBLIC WALKWAY OR SUPPLEMENTAL PUBLIC ACCESS AREA IS WAIVED PURSUANT TO THE CONDITIONS OF PARAGRAPH (C)(2)(III) OF THIS SECTION.	N/A	N/A	N/A	N/A
62-62 (D)	BICYCLE PARKING	BICYCLE RACKS SUFFICIENT TO PROVIDE AT LEAST FOUR BICYCLE PARKING SPACES SHALL BE PROVIDED WITHIN A WATERFRONT PUBLIC ACCESS AREA. FURTHERMORE, WHEN THE COMBINED AREA OF THE SHORE PUBLIC WALKWAY AND SUPPLEMENTAL PUBLIC ACCESS AREA IS GREATER THAN 8,000 SQUARE FEET, TWO ADDITIONAL BICYCLE PARKING SPACES SHALL BE PROVIDED FOR EVERY ADDITIONAL 2,000 SQUARE FEET OF SHORE PUBLIC WALKWAY OR SUPPLEMENTAL PUBLIC ACCESS AREA. BICYCLE RACKS SHALL BE ADJACENT TO A CIRCULATION PATH AND AT LEAST 20 FEET FROM THE SHORELINE. SUCH BICYCLE RACKS MAY BE LOCATED IN PUBLIC SIDEWALKS ADJACENT TO THE ZONING LOT. ALL BICYCLE RACKS SHALL COMPLY WITH THE STANDARDS OF SECTION 62-657.	AT LEAST 4 BICYCLE RACKS SHALL BE PROVIDED WITHIN A WATERFRONT PUBLIC ACCESS AREA AND AN ADDITIONAL 2 BICYCLE RACKS SHALL BE PROVIDED FOR EVERY ADDITIONAL 2,000 SF OVER 8,000 SF OF COMBINED SHORE PUBLIC WALKWAY AND SUPPLEMENTAL PUBLIC ACCESS AREA TOTAL REQUIRED BICYCLE PARKING SPACES: 12 BICYCLE PARKING SPACES	TOTAL PROVIDED BICYCLE PARKING SPACES PROVIDED: 12 BICYCLE PARKING SPACES	COMPLIES	L-401.00
62-62 (E)	TRASH RECEPTACLES	ONE TRASH RECEPTACLE SHALL BE PROVIDED FOR EVERY 4,000 SQUARE FEET OF SHORE PUBLIC WALKWAY AND SUPPLEMENTAL PUBLIC ACCESS AREA, AND ALL TRASH RECEPTACLES SHALL BE LOCATED IN VISIBLE AND CONVENIENT LOCATIONS. ALL TRASH RECEPTACLES SHALL COMPLY WITH THE STANDARDS OF SECTION 62-658.	ONE TRASH RECEPTACLE SHALL BE PROVIDED FOR EVERY 4,000 SF OF SHORE PUBLIC WALKWAY AND SUPPLEMENTAL PUBLIC ACCESS AREA TOTAL REQUIRED TRASH RECEPTACLES: 23,180 SF / 4,000 SF = 6 TRASH RECEPTACLES	TOTAL PROVIDED TRASH RECEPTACLES: 6 TRASH RECEPTACLES (5 WITHIN SHORE PUBLIC WALKWAY AND 1 WITHIN SPAA)	COMPLIES	L-401.00
62-64	DESIGN REQUIREMENTS FOR UPLAND CONNECTIONS	UPLAND CONNECTIONS SHALL BE IMPROVED IN ACCORDANCE WITH PROVISIONS OF SECTION 62-64.	UPLAND CONNECTIONS ARE NOT REQUIRED	NO UPLAND CONNECTIONS PROVIDED	N/A	
62-65	PUBLIC ACCESS DESIGN REFERENCE STANDARDS					
62-65		THE STANDARDS OF THIS SECTION, INCLUSIVE, SHALL BE APPLICABLE TO ALL WATERFRONT PUBLIC ACCESS AREAS AND VISUAL CORRIDORS. NO HOLLOW PLASTIC MATERIAL, SUCH AS PVC OR SIMILAR MATERIAL SHALL BE PERMITTED IN GUARDRAILS, FENCES, SEATING, TRASH RECEPTACLES, OR OTHER SIMILAR FURNITURE WITHIN A WATERFRONT PUBLIC ACCESS AREA. HOWEVER, HIGH-DENSITY POLYETHYLENE SHALL BE PERMITTED.	N/A	N/A	N/A	N/A
62-651	GUARDRAIL GATES AND OTHER PROTECTIVE BARRIERS					
62-651 (A)	GUARDRAILS REQUIRMENTS	A) FOR THE PURPOSES OF THIS PARAGRAPH, (A), THE TERM "GUARDRAIL" SHALL REFER ONLY TO FENCING OR SIMILAR STRUCTURES PROVIDED ALONG A BULKHEAD, STABILIZED SHORE OR THE WATER EDGES OF A PIER OR PLATFORM. WHEN THE GUARDRAIL IS PROVIDED, IT SHALL HAVE A MAXIMUM HEIGHT OF 42 INCHES MEASURED FROM THE ADJOINING GRADE LEVEL, AND SHALL BE AT LEAST 70 PERCENT OPEN. GUARDRAILS MAY BE MOUNTED ON A SOLID CURB NOT HIGHER THAN 6 INCHES. A GUARDRAIL MAY BE SUBSTITUTED FOR A WALL, PURSUANT TO PARAGRAPH (C)(3) OF THIS SECTION.	GUARDRAILS SHALL HAVE A MAXIMUM HEIGHT OF 42 INCHES AND SHALL BE AT LEAST 70 PERCENT OPEN	42 INCH HIGH STAINLESS STEEL MESH GUARDRAIL WITH A MINIMUM OPENING OF 70 PERCENT PROVIDED	COMPLIES	L-602.00.00
62-651 (B)	BOLLARDS	B) BOLLARDS. 1) BOLLARDS SHALL BE LIMITED TO THE FOLLOWING LOCATIONS: I) ALONG THE BULKHEAD, STABILIZED SHORE OR THE WATER EDGES OF A PIER OR PLATFORM; II) ALONG A ZONING LOT LINE ADJACENT TO, AND LIMITING ACCESS FROM AN UPLAND STREET; AND III) ALONG THE BOUNDARIES OF A ROADWAY WITHIN AN UPLAND CONNECTION. 2)BOLLARDS SHALL NOT EXCEED 30 INCHES IN HEIGHT AND SHALL BE BETWEEN 6 AND 15 INCHES IN WIDTH. THE TOP OF BOLLARDS SHALL NOT CONSIST OF ANY SHARP EDGES. THE MINIMUM CLEARANCE BETWEEN TWO BOLLARDS SHALL BE 5 FEET.	N/A	N/A	N/A	N/A
62-651 (C) (1)	FENCE AND WALL LOCATIONS	C) 1) FENCES AND WALLS, WHEN PROVIDED, SHALL BE LIMITED TO THE FOLLOWING LOCATIONS: I) ALONG THE BOUNDARY OF A WATERFRONT PUBLIC ACCESS AREA AND AN ADJOINING PRIVATE ARE ON THE ZONING LOT; II) AROUND THE PERIMETER OF A PLAYGROUND, TOT-LOT OR DOG-RUN; III) ADJOINING WD USES; IV) WITHIN A VISUAL CORRIDOR; AND V) ALONG ANY GRADE LEVEL CHANGE OF 30 INCHES OR GREATER.	ALL FENCES, AND WALLS SHALL BE PROVIDED ONLY IN PERMITTED AREAS	NO UN-PERMITTED WALLS OR FENCES PROVIDED	COMPLIES	N/A
62-651 (C) (2)		2) FENCES SHALL HAVE A MAXIMUM HEIGHT OF 36 INCHES MEASURED FROM THE ADJOINING GRADE LEVEL, AND BE AT LEAST 70 PERCENT OPEN. FENCES MAY BE MOUNTED ON A SOLID CURB NOT HIGHER THAN SIX INCHES.	FENCES SHALL NOT EXCEED A HEIGHT OF 36 INCHES AND SHALL BE AT LEAST 70 PERCENT OPEN	NO UN-PERMITTED FENCES PROVIDED	COMPLIES	L-200.00
62-651 (C) (3)		3) WALLS SHALL NOT EXCEED A HEIGHT OF 21 INCHES, AND MAY BE FULLY OPAQUE.	WALLS SHALL NOT EXCEED A HEIGHT OF 21 INCHES, AND MAY BE FULLY OPAQUE	NO UN-PERMITTED WALLS PROVIDED	COMPLIES	L-200.00
62-651 (C) (4)		4) CHAIN LINK FENCING OR BARBED OR RAZOR WIRE SHALL NOT BE PERMITTED.	CHAIN LINK, BARBED, OR RAZOR WIRE IS PROHIBITED	NO UN-PERMITTED WALLS OR FENCES PROVIDED	COMPLIES	N/A
62-651 (D)	GATES	GATES ATTACHED TO FENCES AND WALLS THAT LIMIT PHYSICAL ACCESS TO WATERFRONT PUBLIC ACCESS AREAS FROM STREETS, PUBLIC PARKS, OR OTHER PUBLIC WAYS, OR FROM ADJACENT WATERFRONT PUBLIC ACCESS AREAS ON ADJOINING ZONING LOTS, SHALL COMPLY WITH THE PROVISIONS OF THIS PARAGRAPH (D). SUCH GATES SHALL BE PERMITTED ONLY AT THE BOUNDARIES OF WATERFRONT PUBLIC ACCESS AREAS AND SUCH ADJACENT PUBLICLY ACCESSIBLE AREAS, EXCEPT THAT IN TYPE 1 UPLAND CONNECTIONS GATES MAY BE LOCATED AT THE SEAWARD BOUNDARY OF THE ENTRY AREA. GATES SHALL NOT INTRUDE INTO ANY PLANTING AREA. GATES MAY BE CLOSED ONLY PURSUANT OF SECTION 62-71.	ALL GATES SHALL BE PROVIDED ONLY IN PERMITTED AREAS	N/A	N/A	N/A
62-652	SEATING					
62-652		ALL REQUIRED SEATING SHALL COMPLY WITH THE FOLLOWING STANDARDS:	N/A	N/A	N/A	N/A
62-652 (A)	SEATING WITH BACKS	A) SEATING WITH BACKS. AT LEAST 50 PERCENT OF THE REQUIRED SEATING SHALL HAVE BACKS, AND AT LEAST 50 PERCENT OF SUCH SEATING SHALL FACE IN THE GENERAL DIRECTION OF THE WATER. SEAT BACKS SHALL BE AT LEAST 14 INCHES HIGH. WALLS LOCATED ADJACENT TO A SEATING SURFACE SHALL NOT COUNT AS SEAT BACKS. ALL SEAT BACKS MUST EITHER BE CONTOURED IN FORM FOR COMFORT OR SHALL BE RECLINED FROM THE VERTICAL BETWEEN 10 TO 15 DEGREES.	50 PERCENT OF REQUIRED SEATING SHALL HAVE BACKS AND AT LEAST 50 PERCENT OF BACKED SEATING SHALL FACE IN THE GENERAL DIRECTION OF THE WATER. TOTAL REQUIRED SEATING: 309 LF OF SEATING TOTAL REQUIRED BACKED SEATING: 154.50 LF OF BACKED SEATING TOTAL REQUIRED BACKED SEATING FACING WATER: 77.25 LF OF BACKED SEATING FACING WATER	TOTAL PROVIDED SEATING: 369.684 LF OF SEATING TOTAL BACKED SEATING PROVIDED: 156.81 LF OF BACKED SEATING TOTAL BACKED SEATING PROVIDED FACING WATER: 113.99 LF OF BACKED SEATING FACING WATER	COMPLIES	L-401.00 & L-402.00
62-652 (B)	SEATING DEPTH	B) DEPTH. SEATING WITH OR WITHOUT BACKS SHALL HAVE A DEPTH OF NOT LESS THAN 18 INCHES, AND FOR SEATING WITH BACKS, SUCH DEPTH SHALL NOT BE GREATER THAN 20 INCHES. SEATING WITH A DEPTH OF AT LEAST 36 INCHES, AND ACCESSIBLE FROM BOTH SIDES, MAY BE CREDITED AS DOUBLE SEATING. WHEN SEATING IS PROVIDED ON A PLANTER LEDGE, SUCH LEDGE MUST HAVE A MINIMUM DEPTH OF 22 INCHES.	ALL SEATING SHALL HAVE A MINIMUM DEPTH OF 18 INCHES AND ALL BACKED SEATING SHALL HAVE A MAXIMUM DEPTH OF 20 INCHES. WHEN SEATING IS PROVIDED ON A PLANTER LEDGE, IT SHALL HAVE A MINIMUM DEPTH OF 22 INCHES.	ALL PROVIDED SEATING DEPTHS RANGES BETWEEN 18 AND 24 INCHES	COMPLIES	L-603.00
62-652 (C)	SEATING HEIGHT	C) HEIGHT. AT LEAST 75 PERCENT OF THE REQUIRED SEATING SHALL HAVE A HEIGHT NOT LESS THAN 16 INCHES NOR GREATER THAN 20 INCHES ABOVE THE LEVEL OF THE ADJACENT GRADE. SEATING HIGHER THAN 36 INCHES OR LOWER THAN 12 INCHES SHALL NOT QUALIFY TOWARD THE SEATING REQUIREMENTS. SEATING MAY BE MOUNTED ON A SOLID CURB NOT HIGHER THAN SIX INCHES.	AT LEAST 75 PERCENT OF REQUIRED SEATING SHALL HAVE A MINIMUM HEIGHT OF 16 INCHES AND A MAXIMUM HEIGHT OF 20 INCHES.	ALL PROVIDED SEATING HEIGHTS RANGE BETWEEN 16 AND 20 INCHES	COMPLIES	L-603.00
62-652 (D)	SEATING CLEARANCE	D) CLEARANCE. SEATING SHALL BE LOCATED A MINIMUM OF 22 INCHES FROM ANY CIRCULATION PATH OR PERMITTED OBSTRUCTION ALONG THE ACCESSIBLE SIDE OF SUCH SEATING, EXCEPT THAT SEATING WITHOUT BACKS MAY BE AS CLOSE TO A GUARDRAIL AS 12 INCHES.	SEATING SHALL BE LOCATED 22 INCHES FROM ANY CIRCULATION PATH OR PERMITTED OBSTRUCTION, EXCEPT FOR SEATING WITHOUT BACKS	ALL SEATING PROVIDES A MINIMUM 22 INCH CLEARANCE FROM CIRCULATION PATHS AND PERMITTED OBSTRUCTIONS	COMPLIES	L-100.00
62-652 (E)	TYPES OF SEATING	E) IN SHORE PUBLIC WALKWAYS AND SUPPLEMENTAL PUBLIC ACCESS AREAS, AT LEAST TWO OF THE FOLLOWING TYPES OF SEATING ARE REQUIRED: MOVEABLE SEATING, FIXED INDIVIDUAL SEATS, FIXED BENCHES WITH BACKS WITHOUT BACKS, LOUNGING CHAIRS AND DESIGN FEATURE SEATING.	N/A	N/A	N/A	N/A
62-652 (E) (1)		1) DESIGN FEATURE SEATING. PLANTER LEDGES, SEATING WALLS, AND SEATING STEPS MAY BE PROVIDED, AND SHALL BE LIMITED TO 25 PERCENT OF THE REQUIRED SEATING. WALLS AND PLANTER LEDGES SHALL BE FLAT AND SMOOTH WITH AT LEAST ONE INCH RADIUS ROUNDED EDGES.	PROVIDED PLANTER LEDGES, SEATING WALLS, AND SEATING STEPS SHALL BE NO MORE THAN 25 PERCENT OF REQUIRED SEATING	NO UN-PERMITTED SEATING PROVIDED	COMPLIES	L-402.00
62-652 (E) (2)		2) MOVEABLE SEATING. MOVEABLE CHAIRS, EXCLUDING THOSE IN OPEN AIR CAFES, MAY BE CREDITED AS 18 INCHES OF LINEAR SEATING PER CHAIR; HOWEVER, NOT MORE THAN 50 PERCENT OF REQUIRED LINEAR SEATING MAY BE IN MOVEABLE CHAIRS. MOVEABLE CHAIRS MAY BE PLACED IN STORAGE OUTSIDE OF THE REQUIRED HOURS OF OPERATION, PURSUANT TO SECTION 62-71, PARAGRAPH (A). ALL MOVEABLE CHAIRS MUST HAVE BACKS. MOVEABLE CHAIRS SHALL NOT BE CHAINED, FIXED, OR OTHERWISE SECURED WHILE THE WATERFRONT PUBLIC ACCESS AREA IS OPEN TO THE PUBLIC.	NO MORE THAN 50 PERCENT OF REQUIRED LINEAR SEATING MAY BE MOVEABLE CHAIRS	NO UN-PERMITTED MOVEABLE CHAIRS PROVIDED TOTAL PROVIDED LF OF MOVEABLE CHAIRS: 36 LF OF MOVEABLE CHAIRS OR 11.65% OF REQUIRED SEATING	COMPLIES	L-402.00
62-652 (E) (3)		3) SEATING STEPS. SEATING STEPS SHALL NOT INCLUDE ANY STEPS INTENDED FOR CIRCULATION AND MUST HAVE A HEIGHT NOT LESS THAN 12 INCHES NOR GREATER THAN 30 INCHES AND A DEPTH NOT LESS THAN 18 INCHES.	SEATING STEPS MAY NOT BE INTENDED FOR CIRCULATION. PROVIDED SEATING STEPS SHALL HAVE A MINIMUM HEIGHT OF 12 INCHES, A MAXIMUM HEIGHT OF 30 INCHES, AND A MINIMUM DEPTH OF 18 INCHES	NO UN-PERMITTED SEATING STEPS PROVIDED TOTAL PROVIDED LF OF SEATING STEPS: 49.496 LF OF SEATING STEPS	COMPLIES	L-402.00
62-652 (E) (4)		4) LOUNGE CHAIRS. LOUNGE CHAIRS SHALL ALLOW FOR A RECLINED POSITION SUPPORTING THE BACK AS WELL AS THE LEGS. LOUNGE CHAIRS MAY BE CREDITED AS 36 INCHES OF LINEAR SEATING PER CHAIRS.	LOUNGE CHAIR SEATING SHALL ALLOW FOR A RECLINED BACK AND LEG POSITION	NO UN-PERMITTED LOUNGE CHAIRS PROVIDED TOTAL PROVIDED LF OF LOUNGE CHAIRS: 21 LF OF LOUNGE CHAIRS	COMPLIES	L-402.00
62-652 (F)	SOCIAL SEATING	F) AT LEAST 25 PERCENT OF REQUIRED SEATING SHALL BE SOCIAL SEATING, CONSISTING OF SEATS THAT ARE PLACED IN CLOSE PROXIMITY AND AT ANGLES TO ONE ANOTHER OR IN FACING CONFIGURATIONS THAT FACILITATE SOCIAL INTERACTION. A MINIMUM OF TWO SQUARE FEET OF TABLES SHALL BE REQUIRED FOR EVERY THREE LINEAR FEET OF SOCIAL SEATING. HOWEVER, ANY REQUIREMENT FOR TABLES THAT, IN TOTAL, IS LESS THAN 10 SQUARE FEET SHALL BE WAIVED, AND NO MORE THAN 150 SQUARE FEET OF TABLES SHALL BE REQUIRED IN ANY SITE.	AT LEAST 25 PERCENT OF REQUIRED SEATING SHALL BE SOCIAL SEATING AND A MINIMUM OF 2 SF OF TABLES SHALL BE REQUIRED FOR EVERY 3 LF OF SOCIAL SEATING TOTAL REQUIRED SOCIAL SEATING: 25% X 309 LF = 77.25 LF REQUIRED SOCIAL SEATING TOTAL REQUIRED TABLES: (77.25 LF / 3 LF) X 2 SF = 51.50 SF REQUIRED TABLES	TOTAL PROVIDED LF OF SOCIAL SEATING: 78.25 LF OF SOCIAL SEATING TOTAL PROVIDED SF OF TABLES PROVIDED: 50 SF OF TABLES	COMPLIES	L-402.00
62-652 (G)	SHADED SEATING	AT LEAST 20 PERCENT OF REQUIRED SEATING SHALL BE SHADED. SEATING SHALL BE CONSIDERED SHADED IF IT IS LOCATED UNDER A CANOPY TREE OR SHADE STRUCTURE, OR ON THE EASTERN SIDE AND WITHIN 45 FEET OF THE TRUNK OF A CANOPY TREE OR OF A SHADE STRUCTURE.	AT LEAST 20 PERCENT OF REQUIRED SEATING SHALL BE SHADED TOTAL REQUIRED SHADED SEATING: 20% X 309 LF = 61.80 LF OF SHADED SEATING	TOTAL PROVIDED LF OF SHADED SEATING: 230.184 LF OF SHADED SEATING	COMPLIES	L-402.00
62-652 (H)	SEAWARD SEATING	UP TO 25 PERCENT OF TOTAL SEATING MAY BE SEAWARD OF SHORE PUBLIC WALKWAY.	25 PERCENT OF TOTAL SEATING MAY BE SEAWARD	N/A	N/A	N/A



OWNER
KENT MEMBER LLC
505 FLUSHING AVE, BROOKLYN, NY 11205

CIVIL / PARKING ENGINEER
PHILIB HABIB AND ASSOCIATES
102 MADISON AVE # 11, NEW YORK, NY 10016

LANDSCAPE ARCHITECT
MPFP
120 BROADWAY 20TH FL, NEW YORK, NY 10271

LIGHTING DESIGNER
ONE LUX STUDIO
158 WEST 29TH STREET, FL 10, NEW YORK, NY 10001

LAND USE CONSULTANT
HERRICK FEINSTEIN LLP
TWO PARK AVENUE, NEW YORK, NY 10016

REV	DATE	DESCRIPTION
	3/24/2021	ULURP SUBMISSION
	11/03/2021	ULURP SUBMISSION
	06/22/2022	ULURP SUBMISSION
	09/08/2022	ULURP SUBMISSION
	01/11/2023	DPR REVIEW
	03/22/2023	ULURP SUBMISSION

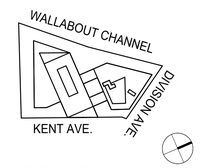

KEY PLAN:NTS

500 KENT

500 KENT AVENUE
BROOKLYN, NY 11249
ID #2019K0330

WATERFRONT PUBLIC ACCESS AREA ZONING CALCULATIONS

SCALE:

DRAWING #:
Z-03 .00
___ of ___

DOB JOB:

3/22/2021 7:28:54 PM

© MARVEL ARCHITECTS, PLLC 2018

ZONING SECTION	ITEM	ZONING RESOLUTION	REQUIRED	PROVIDED	COMPLIANCE	DWG REF
62-653	LIGHTING					
62-653	LIGHTING	ALL WATERFRONT PUBLIC ACCESS AREAS SHALL PROVIDE LIGHTING IN ACCORDANCE WITH THE FOLLOWING REQUIREMENTS: AN AVERAGE MAINTAINED LEVEL OF ILLUMINATION OF NOT LESS THAN ONE HORIZONTAL FOOT CANDLE (LUMENS PER FOOT) THROUGHOUT ALL WALKABLE AREAS, AND A MINIMUM LEVEL OF ILLUMINATION OF NOT LESS THAN 0.2 HORIZONTAL FOOT CANDLES (LUMENS PER FOOT) THROUGHOUT ALL OTHER AREAS, SHALL BE REQUIRED. SUCH LEVEL OF ILLUMINATION SHALL BE MAINTAINED FROM ONE-HALF HOUR BEFORE SUNSET TO ONE-HALF HOUR AFTER SUNRISE. THE AVERAGE ILLUMINATION TO MINIMUM FOOT CANDLE UNIFORMITY RATIO SHALL BE NO GREATER THAN 10:1 WITHIN A WATERFRONT PUBLIC ACCESS AREA. GLARE SHALL BE CONTROLLED TO A SEMI-CUTOFF STANDARD (NOT MORE THAN FIVE PERCENT OF PEAK FOOT CANDLE INTENSITY RADIATING ABOVE 90 DEGREES AND 20 PERCENT OF PEAK INTENSITY ABOVE 80 DEGREES). THE LUMINAIRE SHALL BE EQUIPPED WITH LAMPS WITH A COLOR TEMPERATURE RANGE OF 3000 K TO 4100 K WITH A MINIMUM COLOR RENDERING INDEX OF 65. ALL LENSES AND GLOBES SHALL BE POLYCARBONATE OR EQUIVALENT. ALL LIGHTING SOURCES THAT ILLUMINATE A WATERFRONT PUBLIC ACCESS AREA AND ARE MOUNTED ON OR LOCATED WITHIN BUILDINGS ADJACENT TO THE WATERFRONT PUBLIC ACCESS AREA SHALL BE SHIELDED FROM DIRECT VIEW. IN ADDITION, ALL LIGHTING WITHIN THE WATERFRONT PUBLIC ACCESS AREA SHALL BE SHIELDED TO MINIMIZE ANY ADVERSE EFFECT ON SURROUNDING BUILDINGS CONTAINING RESIDENCES.	N/A	ALL LIGHTING REQUIREMENTS ARE MET THROUGH PROVIDED LIGHTING	COMPLIES	L-403.00
62-654	SIGNAGE	THE PROVISIONS OF THIS SECTION SHALL APPLY TO SIGNS REQUIRED IN WATERFRONT PUBLIC ACCESS AREAS. ALL SUCH SIGNS SHALL BE LOCATED IN DIRECTLY VISIBLE LOCATIONS, WITHOUT ANY OBSTRUCTION AT ANY TIME. SUCH SIGNS SHALL BE FULLY OPAQUE, NON-REFLECTIVE AND CONSTRUCTED OF PERMANENT, HIGHLY DURABLE MATERIALS, SUCH AS METAL OR STONE. ALL LETTERING SHALL BE IN A CLEAR, SANS-SERIF, NON-NARROW FONT SUCH AS ARIAL, HELVETICA, OR VERDANA, SOLID IN COLOR WITH A MINIMUM HEIGHT OF ONE-QUARTER INCH, UNLESS OTHERWISE SPECIFIED IN THIS SECTION, AND SHALL HIGHLY CONTRAST WITH THE BACKGROUND COLOR. DRAWINGS DOCUMENTING THE SIZE, FORMAT, AND ORIENTATION OF ALL THE REQUIRED SIGNS SHALL BE INCLUDED IN THE APPLICATION OR CERTIFICATION, PURSUANT TO SECTION 62-80. SUCH DRAWINGS SHALL INCLUDE DETAILED INFORMATION ABOUT DIMENSIONS OF THE SIGN, LETTERING SIZE, COLOR AND MATERIALS.	N/A	ALL REQUIREMENTS ARE MET FOR SIGNAGE	COMPLIES	L-602.00
62-654 (A)	ENTRY SIGNAGE	ALL WATERFRONT PUBLIC ACCESS AREAS SHALL CONTAIN AN ENTRY SIGN MOUNTED ON A PERMANENT STRUCTURE. SUCH SIGN SHALL BE LOCATED WITHIN FIVE FEET OF THE BOUNDARY OF THE ENTRANCE FROM A STREET, PUBLIC PARK OR OTHER PUBLIC WAY. REQUIRED SIGNAGE SHALL CONTAIN:	N/A	ALL REQUIREMENTS ARE MET FOR ENTRY SIGNAGE PROVIDED: 3 FREE STANDING ENTRY SIGNS (2 WITHIN SHORE PUBLIC WALKWAY AND 1 WITHIN SPAA)	COMPLIES	L-602.00
62-654 (A) (1)		(1) THE NEW YORK CITY WATERFRONT SYMBOL, 12 INCHES SQUARE IN DIMENSION, AS PROVIDED IN THE REQUIRED SIGNAGE SYMBOLS FILE AT THE DEPARTMENT OF CITY PLANNING WEBSITE AND THE "THE NEW YORK WATERFRONT SYMBOL STANDARDS AND SPECIFICATIONS	N/A	ALL REQUIREMENTS ARE MET FOR SIGNAGE	COMPLIES	L-602.00
62-654 (A) (2)		(2) LETTERING AT LEAST ONE-AND ONE-HALF INCHES IN HEIGHT, STATING "OPEN TO PUBLIC" IN BOLD TYPE;	N/A	ALL REQUIREMENTS ARE MET FOR SIGNAGE	COMPLIES	L-602.00
62-654 (A) (3)		(3) LETTERING AT LEAST ONE-HALF INCH IN HEIGHT STATING THE APPROVED HOURS OF OPERATION AS REQUIRED PURSUANT TO SECTION 62-71 (OPERATIONAL REQUIREMENTS), PARAGRAPH (A);	N/A	ALL REQUIREMENTS ARE MET FOR SIGNAGE	COMPLIES	L-602.00
62-654 (A) (4)		(4) LETTERING AT LEAST ONE-HALF INCH IN HEIGHT STATING "DO NOT ENTER OUTSIDE OF HOURS OF OPERATION";	N/A	ALL REQUIREMENTS ARE MET FOR SIGNAGE	COMPLIES	L-602.00
62-654 (A) (5)		(5) THE INTERNATIONAL SYMBOL OF ACCESS FOR PERSONS WITH PHYSICAL DISABILITIES, AT LEAST THREE INCHES SQUARE, OR THE STATEMENT: "THIS PUBLIC ACCESS AREA IS ACCESSIBLE TO PERSONS WITH PHYSICAL DISABILITIES";	N/A	ALL REQUIREMENTS ARE MET FOR SIGNAGE	COMPLIES	L-602.00
62-654 (A) (6)		(6) THE ADDRESS OF THE PROPERTY WHERE THE WATERFRONT PUBLIC ACCESS AREA IS LOCATED;	N/A	ALL REQUIREMENTS ARE MET FOR SIGNAGE	COMPLIES	L-602.00
62-654 (A) (7)		(7) THE NAME OF THE CURRENT OWNER AND THE NAME, PHONE NUMBER AND EMAIL ADDRESS OF THE PERSON DESIGNATED TO MAINTAIN THE WATERFRONT PUBLIC ACCESS AREA;	N/A	ALL REQUIREMENTS ARE MET FOR SIGNAGE	COMPLIES	L-602.00
62-654 (A) (8)		(8) THE STATEMENT: "FOR COMPLAINTS OR QUESTIONS: CALL 311";	N/A	ALL REQUIREMENTS ARE MET FOR SIGNAGE	COMPLIES	L-602.00
62-654 (A) (9)		(9) THE STATEMENT: "FOR MORE INFORMATION GO TO HTTP://NYC.GOV/PLANNING"; AND	N/A	ALL REQUIREMENTS ARE MET FOR SIGNAGE	COMPLIES	L-602.00
62-654 (A) (10)		(10) RULES OF CONDUCT AS SPECIFIED IN SECTION 62-71, PARAGRAPH (B). INFORMATION IN PARAGRAPHS (A)(1) AND (A)(2) MAY BE INSCRIBED IN PAVEMENT OR ON ANY PERMITTED APPROPRIATE AMENITY, SUCH AS A SEATING WALL OR SCULPTURE. ALL INFORMATION REQUIRED IN THIS PARAGRAPH, (A), SHALL BE INCLUDED ON SIGNS WITH A MAXIMUM DIMENSION IN ONE DIRECTION OF 16 INCHES. THE MAXIMUM HEIGHT OF A SIGN ABOVE THE ADJOINING GRADE SHALL BE THREE FEET FOR A HORIZONTAL SIGN AND FIVE FEET FOR A VERTICAL SIGN. THE BOTTOM OF ALL SIGNS SHALL BE AT LEAST EIGHTEEN INCHES ABOVE ADJOINING GRADE, EXCEPT FOR SIGNS ANGLED 45 DEGREES OR LESS AS MEASURED FROM ADJACENT GRADE. HOWEVER, THE WATERFRONT SYMBOL REQUIRED PURSUANT TO PARAGRAPH (A)(1) NEED NOT BE INCLUDED IN SUCH SIGNAGE IF SUCH SYMBOL IS INSCRIBED NEARBY IN PAVEMENT OR ANY APPROPRIATE AMENITY.	N/A	ALL REQUIREMENTS ARE MET FOR SIGNAGE	COMPLIES	L-602.00
62-654(B)	SIGNAGE AT ZONING LOT LINE	A SIGN SHALL BE REQUIRED TO BE LOCATED WITHIN FIVE FEET OF ANY ZONING LOT LINE ADJACENT TO ANOTHER ZONING LOT WITHIN A SHORE PUBLIC WALKWAY AND AT A DISTANCE NO GREATER THAN FIVE FEET FROM THE REQUIRED CIRCULATION PATH. ALL INFORMATION REQUIRED IN PARAGRAPH (A) OF THIS SECTION SHALL BE INCLUDED ON SIGNS WITH A MAXIMUM DIMENSION IN ONE DIRECTION OF 16 INCHES. THE MAXIMUM HEIGHT OF A SIGN ABOVE ADJOINING GRADE SHALL BE THREE FEET. THE BOTTOM OF ALL SIGNS SHALL BE AT LEAST 18 INCHES ABOVE ADJOINING GRADE, EXCEPT FOR SIGNS ANGLED 45 DEGREES OR LESS, AS MEASURED FROM ADJACENT GRADE. HOWEVER, THE WATERFRONT SYMBOL REQUIRED PURSUANT TO PARAGRAPH (A)(1) OF THIS SECTION NEED NOT BE INCLUDED IN SUCH SIGNAGE IF SUCH SYMBOL IS INSCRIBED NEARBY IN PAVEMENT OR ANY APPROPRIATE AMENITY, SUCH AS A SEATING WALL OR SCULPTURE. HOWEVER, THE WATERFRONT SYMBOL REQUIRED PURSUANT TO PARAGRAPH (A)(1) SHALL BE NO LARGER THAN FOUR INCHES SQUARE, OR 12 INCHES SQUARE IF INSCRIBED IN PAVEMENT OR ANY APPROPRIATE AMENITY, AND THE INFORMATION REQUIRED IN PARAGRAPH (A)(2) OF THIS SECTION SHALL BE ONE INCH HIGH. THE INFORMATION REQUIRED IN PARAGRAPHS (A)(1) AND (A)(2) MAY BE INSCRIBED IN PAVEMENT OR ON ANY PERMITTED APPROPRIATE AMENITY	ALL SIGNS SHALL BE LOCATED WITHIN 5 FEET OF ANY ZONING LOT LINE AND NO GREATER THAN 5 FEET FROM THE REQUIRED CIRCULATION PATH	ALL REQUIREMENTS ARE MET FOR PUBLIC ACCESS SIGNAGE	COMPLIES	L-602.00
62-654 (C)	OTHER SIGNAGE	SEATING AREAS WITHIN WATERFRONT PUBLIC ACCESS AREAS ALLOWED PURSUANT TO PARAGRAPH (B) OF SECTION 62-62 (DESIGN REQUIREMENTS FOR SHORE PUBLIC WALKWAYS AND SUPPLEMENTAL PUBLIC ACCESS AREAS) SHALL BE IDENTIFIED BY A SIGN WITH THE WORDS "SEATING OPEN TO PUBLIC" IN LETTERING AT LEAST ONE INCH HIGH. SUCH SIGN SHALL BE CLEARLY VISIBLE FROM THE WATERFRONT PUBLIC ACCESS AREA. IN ADDITION, SUCH SIGN SHALL BE NO GREATER THAN 60 SQUARE INCHES, NO HIGHER THAN 18 INCHES ABOVE ADJACENT GRADE, AND ANGLED FOR VISIBILITY. THE REQUIRED SIGN MAY BE FREESTANDING OR ATTACHED TO A PERMITTED AMENITY WITHIN THE WATERFRONT PUBLIC ACCESS AREA NO ADVERTISING SIGNS MAY BE LOCATED WITHIN A WPAA.	SEATING AREAS SHALL BE INDICATED ON SIGN	2 FREE STANDING SEATING SIGNS PROVIDED (1 WITHIN SHORE PUBLIC WALKWAY AND 1 WITHIN SPAA) BOTH ADJACENT TO ENTRY SIGNAGE	COMPLIES	L-400.00 - L-401.00
62-655	PLANTING AND TREES					
62-655		WITHIN WATERFRONT PUBLIC ACCESS AREAS AND PARKING AREAS WHERE PLANTING OR SCREENING IS REQUIRED, THE DESIGN STANDARDS OF THIS SECTION SHALL APPLY. A DETAILED LANDSCAPE PLAN PREPARED BY A REGISTERED LANDSCAPE ARCHITECT SHALL BE SUBMITTED TO THE DEPARTMENT OF PARKS AND RECREATION PRIOR TO SEEKING CERTIFICATION BY THE CHAIRPERSON OF THE CITY PLANNING COMMISSION, PURSUANT TO THE REQUIREMENTS OF SECTION 62-80. SUCH PLANS SHALL INCLUDE PLANTS SUITED FOR WATERFRONT CONDITIONS AND INCLUDE A DIVERSITY OF SPECIES WITH EMPHASIS ON NATIVE PLANTS, SPECIES THAT ARE TOLERANT OF SALT, SEDIMENT, HIGH SEASONAL WATER FLOW, AND HIGH WINDS, AS APPLICABLE TO THE LOCATION AND FACILITATION OF SUSTAINABLE WILDLIFE HABITATS, WHERE APPROPRIATE. NO SPECIES LISTED ON QUARANTINE OR AS A HOST SPECIES FOR ANY DISEASE LISTED BY THE DEPARTMENT OF PARKS OF RECREATION AT THE TIME OF APPLICATION SHALL BE INCLUDED. ALL LANDSCAPED AREAS SHALL CONTAIN A BUILT-IN IRRIGATION SYSTEM OR CONTAIN HOSE BIBS WITHIN 100 FEET OF ALL PLANTING AREAS.	N/A	ALL REQUIREMENTS ARE MET FOR PLANTING AND TREES	COMPLIES	L-300.00
62-655	IRRIGATION	ALL LANDSCAPED AREAS SHALL CONTAIN A BUILT-IN IRRIGATION SYSTEM	ALL LANDSCAPED AREAS SHALL BE IRRIGATED	BUILT-IN IRRIGATION SYSTEM PROVIDED IN ALL PLANTING LOCATIONS	COMPLIES	N/A
62-655 (A)	PLANTING AREAS	WHEREVER A MINIMUM PERCENTAGE OF PLANTING AREA IS SPECIFIED FOR A WATERFRONT PUBLIC ACCESS AREA, SUCH REQUIREMENTS SHALL BE MET ONLY THROUGH THE PROVISIONS OF THE TYPES OF PLANTING AREAS LISTED IN PARAGRAPHS (A)(1) THROUGH (A)(7) OF THIS SECTION. A CURB WITH A MAXIMUM HEIGHT OF SIX INCHES IS PERMITTED ALONG THE PERIMETER OF ANY PLANTING AREA. ANY EDGING HIGHER THAN SIX INCHES ABOVE ADJACENT GRADE SHALL BE CONSIDERED A RETAINING WALL. RETAINING WALLS SHALL NOT EXCEED A MAXIMUM HEIGHT OF THREE FEET, AS MEASURED FROM THE LEVEL OF THE ADJOINING GRADE OR PLANTED AREA BELOW SUCH WALL SO THAT NO MORE THAN THREE FEET OF SUCH RETAINING WALL IS VISIBLE FROM THE WATERFRONT PUBLIC ACCESS AREAS. WHERE NOT SPECIFICALLY INDICATED, THE MINIMUM PLANTING STANDARD FOR REQUIRED PLANTING AREAS SHALL BE TURF GRASS, OTHER NATURAL GRASSES OR GROUNDCOVER. ALL PLANTING AREAS SHALL BE LOCATED ON UNDISTURBED SUBSOIL OR CLEAN FILL.	N/A	ALL REQUIREMENTS ARE MET FOR PLANTING AREAS	COMPLIES	L-300.00
62-655 (A) (1)	SINGLE TREE PITS	A SINGLE TREE PIT SHALL HAVE A MINIMUM DIMENSION OF FIVE FEET WITH A MINIMUM AREA OF 30 SQUARE FEET AND A MINIMUM DEPTH OF 3 FEET, 6 INCHES. ONLY TREE PITS PLANTED WITH GROUND COVER SHALL COUNT TOWARDS MEETING A MINIMUM PLANTING AREA REQUIREMENT.	ALL PLANTING DEPTHS SHALL BE A MINIMUM OF 3'-6" & PROVIDE A MINIMUM AREA OF 30 SQUARE FEET FOR EACH TREE	ALL PLANTING DEPTHS ARE MINIMUM OF 3'-6" & A MINIMUM AREA OF 30 SQUARE FEET FOR EACH TREE IS PROVIDED	COMPLIES	L-601.00
62-655 (A) (2)	CONTINUOUS TREE PITS	A CONTINUOUS TREE PIT IS A PLANTING AREA CONTAINING TWO OR MORE TREES. CONTINUOUS TREE PITS SHALL HAVE A MINIMUM WIDTH OF FIVE FEET AND A MINIMUM DEPTH OF 3 FEET, 6 INCHES, AND A LENGTH AS REQUIRED TO MEET A MINIMUM OF FIVE FEET FROM THE TRUNK OF THE TREE TO THE END OF THE TREE PIT.	ALL PLANTING DEPTHS SHALL BE A MINIMUM OF 3'-6" & PROVIDE A MINIMUM AREA OF 30 SQUARE FEET FOR EACH TREE	ALL PLANTING DEPTHS ARE MINIMUM OF 3'-6" & A MINIMUM AREA OF 30 SQUARE FEET FOR EACH TREE IS PROVIDED	COMPLIES	L-601.00
62-655 (A) (3)	PLANTING BED SQUARE FOOTAGE	PLANTING BEDS FOR TURF GRASS OR GROUNDCOVERS SHALL HAVE MINIMUM DIMENSIONS OF TWO FEET IN ANY DIRECTION AND A MINIMUM DEPTH OF TWO FEET. PLANTING BEDS FOR SHRUBS SHALL HAVE MINIMUM DIMENSIONS OF THREE FEET BY THREE FEET FOR EACH SHRUB AND A MINIMUM DEPTH OF 2 FEET, 6 INCHES. PLANTING BEDS CONTAINING TREES SHALL HAVE A MINIMUM DIMENSION OF FIVE FEET AND A MINIMUM AREA OF 30 SQUARE FEET FOR EACH TREE, WITH A MINIMUM DEPTH OF 3 FEET, 6 INCHES. TREES, SHRUBS OR GROUNDCOVERS MAY BE COMBINED IN A SINGLE PLANTING BED ONLY IF SUCH BED MEETS THE MINIMUM DEPTH REQUIRED FOR THE LARGEST PLANT. RETAINING WALLS ARE PERMITTED ALONG THE PERIMETER OF A PLANTING BED IN ACCORDANCE WITH THE REGULATIONS FOR PLANTING AREAS IN PARAGRAPH (A) OF THIS SECTION.	PLANTING BEDS FOR TURF OR GROUND COVER SHALL HAVE MINIMUM DIMENSIONS OF 2 FEET IN ANY DIRECTION AND A MINIMUM DEPTH OF 2 FEET. PLANTING BEDS FOR SHRUBS SHALL HAVE MINIMUM DIMENSIONS OF 3 FEET BY 3 FEET FOR EACH SHRUB AND A MINIMUM DEPTH OF 2 FEET, SIX INCHES. PLANTING BEDS CONTAINING TREES SHALL HAVE A MINIMUM DIMENSIONS OF FIVE FEET AND A MINIMUM AREA OF 30 SF FOR EACH TREE	MINIMUM 2'-0" DEPTH PROVIDED FOR GROUNDCOVER MINIMUM 2'-6" DEPTH PROVIDED FOR SHRUBS MINIMUM 3'-6" DEPTH PROVIDED FOR TREES	COMPLIES	L-601.00
62-655 (A) (4)	TERRACED PLANTING AREAS	A "TERRACED PLANTING AREA" IS A PLANTING AREA WITH TWO OR MORE PLANTING BEDS INCORPORATING RETAINING WALLS ON A SLOPE WITH A GRADE CHANGE GREATER THAN OR EQUAL TO THREE FEET. A TERRACED PLANTING AREA SHALL COMPLY WITH THE DIMENSIONAL STANDARDS FOR A PLANTING BED EXCEPT THAT THE AVERAGE DEPTH OF THE INDIVIDUAL PLANTING BEDS BETWEEN THE TWO RETAINING WALLS SHALL NOT BE LESS THAN THREE FEET, AS MEASURED PERPENDICULAR TO THE EDGE OF THE RETAINING WALL. IN ADDITION, FOR RETAINING WALLS BETWEEN TWO OR MORE PLANTING BEDS, THEIR HEIGHT MAY EXCEED THREE FEET, PROVIDED THAT THE FRONT OF SUCH RETAINING WALLS IS SCREENED BY PLANT MATERIAL.	N/A	N/A	N/A	N/A
62-655 (A) (5)	BERMS	A "BERM" IS A PLANTING AREA WITH SLOPED GRADE STABILIZED PRIMARILY BY PLANT MATERIALS RATHER THAN RETAINING WALLS OR OTHER SIMILAR BUILT STRUCTURES. A BERM SHALL COMPLY WITH THE DIMENSIONAL STANDARDS FOR A PLANTING BED EXCEPT THAT THE HEIGHT FROM THE ADJACENT GRADE TO THE TOP OF THE BERM SHALL NOT EXCEED 60 INCHES.	N/A	N/A	N/A	N/A



OWNER
KENT MEMBER LLC
505 FLUSHING AVE, BROOKLYN, NY 11205

CIVIL / PARKING ENGINEER
PHILIB HABIB AND ASSOCIATES
102 MADISON AVE # 11, NEW YORK, NY 10016

LANDSCAPE ARCHITECT
MPFP
120 BROADWAY 20TH FL, NEW YORK, NY 10271

LIGHTING DESIGNER
ONE LUX STUDIO
158 WEST 29TH STREET, FL 10, NEW YORK, NY 10001

LAND USE CONSULTANT
HERRICK FEINSTEIN LLP
TWO PARK AVENUE, NEW YORK, NY 10016

REV	DATE	DESCRIPTION
	3/24/2021	ULURP SUBMISSION
	11/03/2021	ULURP SUBMISSION
	06/22/2022	ULURP SUBMISSION
	09/08/2022	ULURP SUBMISSION
	01/11/2023	DPR REVIEW
	03/22/2023	ULURP SUBMISSION

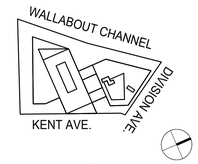

KEY PLAN:NTS

500 KENT

500 KENT AVENUE
BROOKLYN, NY 11249

ID #2019K0330

WATERFRONT PUBLIC ACCESS AREA ZONING CALCULATIONS

SCALE:

DRAWING #:
Z-04 .00
___ of ___

DOB JOB:

© MARVEL ARCHITECTS, PLLC 2018

ZONING SECTION	ITEM	ZONING RESOLUTION	REQUIRED	PROVIDED	COMPLIANCE	DWG REF
62-655 (A) (6)	LAWNS	A "LAWN" IS AN AREA PLANTED WITH TURF GRASS HAVING A MINIMUM SOIL DEPTH OF 2 FEET, 6 INCHES. ALONG AT LEAST 60 PERCENT OF THE PERIMETER, A LAWN SHALL HAVE A GRADE LEVEL WITHIN SIX INCHES OF THE ADJACENT GRADE PROVIDING UNOBSTRUCTED PEDESTRIAN ACCESS. ANY REQUIRED LAWN SHALL HAVE A MINIMUM AREA OF 500 SQUARE FEET AND NO DIMENSION LESS THAN 18 FEET.	LAWNS SHALL HAVE A MINIMUM SOIL DEPTH OF 2 FEET, 6 INCHES AND HAVE A MINIMUM AREA OF 500 SF	ALL REQUIREMENTS ARE MET FOR LAWN PLANTING TOTAL PROVIDED LAWN AREA: 2,305.74 SF OF LAWN	COMPLIES	L-300.00
62-655 (A) (7)	SCREENING	SCREENING IS INTENDED TO CREATE A LANDSCAPED BUFFER BETWEEN THE WATERFRONT PUBLIC ACCESS AREAS AND ADJOINING NON-PUBLIC USES TO PROTECT THE PRIVACY OR MINIMIZE THE VISUAL IMPACT OF BLANK WALLS, EQUIPMENT, LOADING AND PARKING AREAS OR SIMILAR CONDITIONS.	N/A	N/A	N/A	N/A
62-655 (A) (7) (I)		(I) SCREENING BUFFERS SCREENING BUFFERS REQUIRED PURSUANT TO PARAGRAPH (C)(2) OF SECTION 62-62 (DESIGN REQUIREMENTS FOR SHORE PUBLIC WALKWAYS AND SUPPLEMENTAL PUBLIC ACCESS AREAS) SHALL CONSIST OF DENSELY PLANTED SHRUBS OR MULTI-STEMMED SCREENING PLANTS, WITH AT LEAST 50 PERCENT BEING EVERGREEN SPECIES. SHRUBS SHALL HAVE A HEIGHT OF AT LEAST FOUR FEET AT THE TIME OF PLANTING. THE REQUIREMENTS OF THIS PARAGRAPH, (A)(7)(I), MAY ALSO BE SATISFIED BY THE REQUIREMENTS OF PARAGRAPH (A)(7)(II) OF THIS SECTION.	N/A	N/A	N/A	N/A
62-655 (A) (7) (II)		(II) BLANK WALLS AND SERVICE AREAS BLANK WALLS HIGHER THAN FOUR FEET MEASURED FROM AN ADJACENT GRADE LEVEL AND SERVICE AREAS ANYWHERE WITHIN A WATERFRONT PUBLIC ACCESS AREA SHALL BE SCREENED WITH ANY COMBINATION OF EVERGREEN TREES, VINES OR ESPALIERED TREES OR SHRUBS, AND AN ARCHITECTURAL TREATMENT SUCH AS A PERGOLA, STONE RUSTICATION, GRILLS OR SCULPTURAL FEATURES.	N/A	N/A	N/A	N/A
62-655 (A) (7) (III)		(III) PARKING GARAGE SCREENING OPEN PARKING AREAS ON ANY ZONING LOT FRONTING ON AN UPLAND CONNECTION OR STREET ON ANY WATERFRONT BLOCK, NOTWITHSTANDING THE USE ON SUCH LOT, SHALL REQUIRE SCREENING PURSUANT TO SECTION 37-921 (PERIMETER LANDSCAPING). SCREENING REQUIRED PURSUANT TO SECTION 62-453 SHALL CONSIST OF A PLANTING STRIP AT LEAST FOUR FEET WIDE. PLANTS SHALL BE AT LEAST FOUR FEET HIGH AT THE TIME OF PLANTING AND 50 PERCENT OF THEM SHALL BE EVERGREEN SHRUBS. ALL REQUIRED SCREENING MAY BE INTERRUPTED BY VEHICULAR OR PEDESTRIAN ENTRANCES.	N/A	N/A	N/A	N/A
62-655 (B)	TREES	B) TREES	N/A	ALL REQUIREMENTS ARE MET FOR TREES	COMPLIES	L-300.00
62-655 (B) (1)		(1) TREE CALIPER AT TIME OF PLANTING, CANOPY TREES SHALL BE A MINIMUM OF THREE INCHES CALIPER AND ORNAMENTAL TREES SHALL BE A MINIMUM OF TWO INCHES CALIPER.	CANOPY TREES SHALL BE A MINIMUM OF 3 INCHES CALIPER AND ORNAMENTAL TREES SHALL BE A MINIMUM OF 2 INCHES CALIPER	ALL REQUIREMENTS ARE MET FOR TREES	COMPLIES	N/A
62-655 (B) (2)		(2) TREES IN SINGLE TREE PITS ONE OF THE PROCEDURES IN THIS PARAGRAPH, (B)(2), SHALL BE EMPLOYED TO PROTECT TREES PLANTED AT GRADE:	N/A	ALL REQUIREMENTS ARE MET FOR TREES	COMPLIES	N/A
62-655 (B) (2) (I)		(I) GRANITE OR CAST CONCRETE BLOCK PAVERS WITH A MINIMUM FOUR INCH DEPTH SHALL BE INSTALLED IN ACCORDANCE WITH NEW YORK CITY DEPARTMENT OF PARKS AND RECREATION (DPR) STANDARDS FOR STREET TREES;	PAVERS WITH A MINIMUM 4 INCH DEPTH SHALL BE INSTALLED	ALL REQUIREMENTS ARE MET FOR TREES	COMPLIES	N/A
62-655 (B) (2) (II)		(II) A GRATE SHALL BE INSTALLED OVER THE ROOT ZONE, SUPPORTED AT ITS EDGES AND SET FLUSH WITH THE ADJACENT PAVEMENT FOR PEDESTRIAN SAFETY, IN ACCORDANCE WITH DPR STANDARDS FOR STREET TREES FOR GRATE SIZE; OR	A GRATE SHALL BE INSTALLED OVER THE ROOT ZONE	ALL REQUIREMENTS ARE MET FOR TREES	COMPLIES	N/A
62-655 (B) (2) (III)		(III) THE ROOT ZONE SHALL BE SURROUNDED WITH BARRIER HEDGE PLANTING.	N/A	ALL REQUIREMENTS ARE MET FOR TREES	COMPLIES	N/A
62-656	PAVING					
62-656 (A) (1)	PAVING WITHIN REQ. CIRCULATION PATHS	ALL PAVING MATERIAL FOR A REQUIRED CIRCULATION PATH SHALL BE PERMANENT, DURABLE, ACCESSIBLE TO PERSONS WITH PHYSICAL DISABILITIES, AND SHALL CONSIST OF ONE OR A COMBINATION OF THE FOLLOWING:	PAVING MATERIAL SHALL BE PERMANENT, DURABLE, AND ACCESSIBLE	ALL REQUIREMENTS ARE MET FOR PAVERS	COMPLIES	L-400.00
62-656 (A) (1) (I)		(I) UNIT PAVERS CONSTITUTED OF STONE, CONCRETE, GRANITE, ASPHALT OR A MIX OF THESE MATERIALS WITH OTHER AGGREGATES;	ALL PAVERS MUST BE STONE, CONCRETE, GRANITE, ASPHALT, OR A MIX OF THESE MATERIALS	ASPHALT/PRECAST PAVERS PROVIDED	COMPLIES	L-400.00
62-656 (A) (1) (II)		(II) CONCRETE, PREFABRICATED, POURED OR PERMEABLE;	N/A	N/A	N/A	N/A
62-656 (A) (1) (III)		(III) WOOD PLANKS FOR BOARDWALK OR DECKING, EXCEPT THAT TROPICAL HARDWOOD SHALL NOT BE PERMITTED;	N/A	N/A	N/A	N/A
62-656 (A) (1) (IV)		(IV) SOLID PLASTIC, SUCH AS “PLASTIC LUMBER,” HIGH DENSITY POLYETHYLENE, WOOD COMPOSITE PLASTIC OR FIBER-REINFORCED PLASTIC.	N/A	N/A	N/A	N/A
62-656 (A) (2)	PAVING OTHER THAN WITHIN REQ. CIRCULATION PATHS	IN ADDITION TO THE PERMITTED PAVING MATERIALS OF PARAGRAPH (A)(1) OF THIS SECTION, THE FOLLOWING MATERIALS SHALL BE PERMITTED ANYWHERE IN A WATERFRONT PUBLIC ACCESS AREA:	N/A	ASPHALT/PRECAST PAVERS, BRICK PAVING, AND TINTED CONCRETE PAVING	COMPLIES	L-400.00
62-656 (A) (2) (I)		(I) BLOCKS SUCH AS BELGIAN BLOCKS, COBBLE STONES, CONCRETE COBBLES OR EUROCOBBLE;	N/A	ALL REQUIREMENTS ARE MET FOR PAVERS	COMPLIES	L-400.00
62-656 (A) (2) (II)		(II) GRAVEL, LOOSE, INSTALLED OVER A SOLID SURFACE OR GLUED WITH RESIN;	N/A	ALL REQUIREMENTS ARE MET FOR PAVERS	COMPLIES	L-400.00
62-656 (A) (2) (III)		(III) WOOD CHIPS OR OTHER SIMILAR MATERIAL;	N/A	ALL REQUIREMENTS ARE MET FOR PAVERS	COMPLIES	L-400.00
62-656 (A) (2) (IV)		(IV) METAL GRATING, LIMITED TO LOCATIONS THAT REQUIRE DRAINAGE AND FOR PLATFORMS;	N/A	ALL REQUIREMENTS ARE MET FOR PAVERS	COMPLIES	L-400.00
62-656 (A) (2) (V)		(V) ASPHALT, IMPERMEABLE OR POROUS, WHICH MAY BE IMPRINTED WITH THERMOPLASTIC PATTERNS.	N/A	ALL REQUIREMENTS ARE MET FOR PAVERS	COMPLIES	L-400.00
62-656 (B)	DIMENSIONAL REQUIREMENTS	DIMENSIONAL REQUIREMENTS	N/A	ALL REQUIREMENTS ARE MET FOR PAVERS	COMPLIES	L-400.00
62-656 (B) (1)		(1) ALL UNIT PAVERS SHALL HAVE A MINIMUM THICKNESS DIMENSION OF TWO INCHES FOR PEDESTRIAN USE AND THREE INCHES FOR VEHICULAR USE AND SHALL NOT EXCEED A MAXIMUM OF FOUR SQUARE FEET IN AREA.	ALL PAVERS SHALL BE A MINIMUM 2 INCHES THICK FOR PEDESTRIAN USE AND 3 INCHES FOR VEHICULAR USE	ALL PAVERS ARE 3" THICK MIN.	COMPLIES	L-400.00
62-656 (B) (2)		(2) WOOD PLANKS OR PLASTIC LUMBER FOR BOARDWALK OR DECKING SHALL BE A MINIMUM OF THREE INCHES THICK (NOMINAL DIMENSION). THE DIRECTION OF PLANKS SHALL NOT BE PARALLEL TO THE DIRECTION OF TRAFFIC.	N/A	N/A	N/A	N/A
62-656 (B) (3)		(3) CONCRETE SLABS, OTHER THAN IN UPLAND CONNECTIONS, SHALL BE A MAXIMUM OF TWO FEET IN ANY ONE DIMENSION.	CONCRETE SLABS SHALL BE A MAXIMUM OF 2 FEET IN ANY ONE DIMENSION	ALL REQUIREMENTS ARE MET FOR PAVERS	COMPLIES	N/A
62-657	BICYCLE RACKS					
62-657		EACH BICYCLE RACK SHALL ALLOW FOR THE BICYCLE FRAME AND ONE WHEEL TO BE LOCKED TO THE RACK. IF BICYCLES CAN BE LOCKED TO EACH SIDE OF THE RACK, EACH SIDE MAY BE COUNTED AS A REQUIRED SPACE. THIRTY INCHES OF MANEUVERABLE SPACE SHALL BE PROVIDED BETWEEN PARALLEL BICYCLE RACKS AND AN EIGHT FOOT WIDE AISLE SHALL BE PROVIDED BETWEEN BICYCLE RACK AREAS.	EACH BIKE RACK PROVIDED SHALL PROVIDE PARKING ON BOTH SIDES OF RACK WITH 30" OF MANEUVERABLE SPACE BETWEEN PARALLEL BICYCLE RACKS AND AN EIGHT FOOT WIDE MIN. AISLE WIDTH BETWEEN BICYCLE RACK AREAS.	EACH BIKE RACK PROVIDES PARKING ON BOTH SIDES OF RACK WITH 30" OF MANEUVERABLE SPACE BETWEEN PARALLEL BICYCLE RACKS AND AN EIGHT FOOT WIDE MIN. AISLE WIDTH BETWEEN BICYCLE RACK AREAS.	COMPLIES	L-602.00
62-658	TRASH RECEPTACLES					
62-658		TRASH RECEPTACLES SHALL BE PLACED WITHIN 50 FEET OF A SEATING AREA, HAVE A MINIMUM CAPACITY OF 25 GALLONS AND HAVE EITHER TOP OPENINGS THAT MEASURE AT LEAST 12 INCHES WIDE OR SIDE OPENINGS THAT INSCRIBE A RECTANGLE MEASURING AT LEAST 12 INCHES WIDE AND SIX INCHES HIGH. TRASH RECEPTACLES SHALL BE ABLE TO USE STANDARD BAGS USED TO COLLECT TRASH.	TRASH RECEPTACLES SHALL BE LOCATED WITHIN 50' OF SEATING AREA AND HAVE A CAPACITY FOR 32 GALLONS WITH TOP OPENINGS THAT MEASURE AT LEAST 12 INCHES WIDE. TRASH RECEPTACLES SHALL BE ABLE TO USE STANDARD BAGS TO COLLECT TRASH.	TRASH RECEPTACLES ARE LOCATED WITHIN 50' OF SEATING AREA AND HAVE A CAPACITY FOR 32 GALLONS WITH TOP OPENINGS THAT MEASURE AT LEAST 12 INCHES WIDE. TRASH RECEPTACLES ARE ABLE TO USE STANDARD BAGS TO COLLECT TRASH.	COMPLIES	L-602.00

PUBLIC ACCESS AREA 1 (PAA) = 12,200 SF

ITEM	PROVIDED	DRAWING REFERENCE
CIRCULATION PATH		
CIRCULATION PATH MINIMUM WIDTH	10' MINIMUM CLEAR CIRCULATION PATH	L-100.00
SEATING		
SEATING LINEAR FOOTAGE	130.73 LF OF BACKLESS SEATING	L-401.00
SEATING DEPTH	20" SEATING DEPTH	L-600.00
SEATING HEIGHT	16" SEATING HEIGHT	L-600.00
SEATING CLEARANCE	MINIMUM 22" CLEAR PROVIDED FROM 12' WIDE CIRCULATION PLAN	L-100.00 & L-401.00
PLANTING		
PLANTING AREAS	2,925 SF OF PLANTING	L-301.00
CANOPY TREES	14 TREES	L-300.00
TREE CALIPER	ALL TREES PROVIDED WITH 3" MIN. CALIPER OR EQUIVALENT HEIGHT FOR MULTI STEM	L-601.00
SINGLE TREE PITS	MIN. 3'-6" DEPTH PROVIDED FOR TREES, MIN. 2'-6" DEPTH PROVIDED FOR SHRUBS, & MIN. 2'-0" DEPTH PROVIDED FOR GROUNDCOVER	L-601.00
CONTINUOUS TREE PITS	MIN. 3'-6" DEPTH PROVIDED FOR TREES, MIN. 2'-6" DEPTH PROVIDED FOR SHRUBS, & MIN. 2'-0" DEPTH PROVIDED FOR GROUNDCOVER	L-601.00
PLANTING BED SQUARE FOOTAGE	ALL PLANTING DEPTHS ARE MINIMUM OF 3'-6" & A MINIMUM AREA OF 30 SQUARE FEET FOR EACH TREE IS PROVIDED	L-601.00
RAISED PLANTING BEDS	24" MAX.	L-200.00
IRRIGATION	BUILT-IN IRRIGATION SYSTEM PROVIDED	N/A
SITE AMENITIES		
TRASH RECEPTACLES	2 TRASH RECEPTACLES	L-401.00 & L-402.00
LIGHTING		
LIGHTING AT WALKABLE AREAS	LIGHTING AT ALL WALKABLE AREAS SHALL BE MIN. OF 1 HORIZONTAL FOOT CANDLES	L-403.00
LIGHTING AT ALL OTHER AREAS	LIGHTING AT ALL OTHER AREAS SHALL BE MIN. OF 0.2 HORIZONTAL FOOT CANDLES	L-403.00
PAVING		
PAVING WITHIN REQ. CIRCULATION PATHS	ASPHALT / PRECAST UNIT PAVERS	L-600.00
PAVING OTHER THAN WITHIN REQ. CIRCULATION PATHS	SQUARE ASPHALT UNIT PAVERS / EXTERIOR BRICK/ TINTED CONCRETE	L-600.00
UNIT PAVER THICKNESS	PEDESTRIAN AND VEHICULAR PAVERS ARE 3" THICK	L-600.00

PUBLIC ACCESS AREA 2 (PAA) = 14,053 SF

ITEM	PROVIDED	DRAWING REFERENCE
CIRCULATION PATH		
CIRCULATION PATH MINIMUM WIDTH	10' MINIMUM CLEAR CIRCULATION PATH	L-100.00
SEATING		
SEATING LINEAR FOOTAGE	187.22 LF OF BACKED SEATING	L-402.00
SEATING DEPTH	20" SEATING DEPTH	L-600.00
SEATING HEIGHT	16" SEATING HEIGHT	L-600.00
SEATING CLEARANCE	MINIMUM 22" CLEAR PROVIDED FROM 12' WIDE CIRCULATION PLAN	L-100.00
PLANTING		
PLANTING AREAS	7,508 SF OF PLANTING	L-301.00
CANOPY TREES	29 TREES	L-300.00
TREE CALIPER	ALL TREES PROVIDED WITH 3" MIN. CALIPER OR EQUIVALENT HEIGHT FOR MULTI STEM	L-601.00
SINGLE TREE PITS	MIN. 3'-6" DEPTH PROVIDED FOR TREES, MIN. 2'-6" DEPTH PROVIDED FOR SHRUBS, & MIN. 2'-0" DEPTH PROVIDED FOR GROUNDCOVER	L-601.00
CONTINUOUS TREE PITS	MIN. 3'-6" DEPTH PROVIDED FOR TREES, MIN. 2'-6" DEPTH PROVIDED FOR SHRUBS, & MIN. 2'-0" DEPTH PROVIDED FOR GROUNDCOVER	L-601.00
PLANTING BED SQUARE FOOTAGE	ALL PLANTING DEPTHS ARE MINIMUM OF 3'-6" & A MINIMUM AREA OF 30 SQUARE FEET FOR EACH TREE IS PROVIDED	L-601.00
RAISED PLANTING BEDS	24" MAX.	L-200.00
IRRIGATION	BUILT-IN IRRIGATION SYSTEM PROVIDED	N/A
SITE AMENITIES		
TRASH RECEPTACLES	2 TRASH RECEPTACLES	L-401.00 & L-402.00
LIGHTING		
LIGHTING AT WALKABLE AREAS	LIGHTING AT ALL WALKABLE AREAS SHALL BE MIN. OF 1 HORIZONTAL FOOT CANDLES	L-403.00
LIGHTING AT ALL OTHER AREAS	LIGHTING AT ALL OTHER AREAS SHALL BE MIN. OF 0.2 HORIZONTAL FOOT CANDLES	L-403.00
PAVING		
PAVING WITHIN REQ. CIRCULATION PATHS	ASPHALT / PRECAST UNIT PAVERS	L-600.00
PAVING OTHER THAN WITHIN REQ. CIRCULATION PATHS	SQUARE ASPHALT UNIT PAVERS / EXTERIOR BRICK/ TINTED CONCRETE	L-600.00
UNIT PAVER THICKNESS	PEDESTRIAN AND VEHICULAR PAVERS ARE 3" THICK	L-600.00



OWNER
KENT MEMBER LLC
505 FLUSHING AVE, BROOKLYN, NY 11205

CIVIL / PARKING ENGINEER
PHILIB HABIB AND ASSOCIATES
102 MADISON AVE # 11, NEW YORK, NY 10016

LANDSCAPE ARCHITECT
MPFP
120 BROADWAY 20TH FL, NEW YORK, NY 10271

LIGHTING DESIGNER
ONE LUX STUDIO
158 WEST 29TH STREET, FL 10, NEW YORK, NY 10001

LAND USE CONSULTANT
HERRICK FEINSTEIN LLP
TWO PARK AVENUE, NEW YORK, NY 10016

REV	DATE	DESCRIPTION
	3/24/2021	ULURP SUBMISSION
	11/03/2021	ULURP SUBMISSION
	06/22/2022	ULURP SUBMISSION
	09/08/2022	ULURP SUBMISSION
	01/11/2023	DPR REVIEW
	03/22/2023	ULURP SUBMISSION

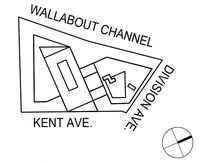

KEY PLAN:NTS

500 KENT

500 KENT AVENUE
BROOKLYN, NY 11249

ID #2019K0330

WATERFRONT PUBLIC ACCESS AREA ZONING CALCULATIONS

SCALE:

DRAWING #:
Z-05 .00
___ of ___

DOB JOB:

3/22/2021 7:28:54 PM

© MARVEL ARCHITECTS, PLLC 2018

LEGEND

- PROPERTY LINE
- SHORE PUBLIC WALKWAY ZR 62-62
- SUPPLEMENTAL PUBLIC ACCESS AREA ZR 62-64
- VISUAL CORRIDOR ZR 62-51
- PAA 2
- PAA 1
- MPAA BOUNDARY
- ILLUSTRATIVE BUILDING LINE
- U.S. PIER & BULKHEAD LINES
- PROPOSED BUILDING FOOTPRINT
- CLEAR PATH CIRCULATION PATH
- EXTERIOR BRICK PAVERS (1/L600)
- ASPHALT PAVERS (2/L600)
- CONCRETE PAVING (3/L600)
- VEHICULAR ASPHALT (4/L600)
- FIRE HYDRANT
- EXISTING POST
- EXISTING MANHOLE
- EXISTING SIGN
- EXISTING EMERGENCY PHONE
- OFFICE ACCESS POINT
- COMMERCIAL ACCESS
- LOADING DOCK UG 6B
- PARKING INGRESS/EGRESS
- EXISTING STREET VENT GRILLE
- EXISTING CATCH BASIN
- EXISTING BUS STOP
- EXISTING TREE
- PROPOSED TREE (1/L601)
- BIKE RACK (4/L602)
- TRASH RECEPTACLE (3/L602)
- PROPOSED LIGHTPOLE (6/L602)
- PROPOSED WHEELCHAIR SEATING
- BENCH TYP. (4/L602)
- BULKHEAD WITH GUARDRAIL (7/L602)
- STAIRS (7/L600)
- CONCRETE WALL OR SEATWALL (5 & 6/L600)
- TABLE AND CHAIRS (1&2/L603)
- CHAISE LOUNGE (3/L603)

625 KENT AVE.
LOT:1
BLOCK 2023

VACANT LAND

OFFICE

COVERED ADDITIONAL OPEN SPACE

RETAIL

BACK OF HOUSE

MECHANICAL

LOADING

BUILDING LOBBY

PARKING

ADDITIONAL OPEN SPACE

10'-0" VC/ PAA 2 CLEAR PATH TYP.

6'-0" SPAA CLEAR PATH TYP.

6'-0" PAA 1 CLEAR PATH TYP.

CENTER LINE OF VISUAL CORRIDOR

50'-0" VISUAL CORRIDOR

15' CLEAR AREA

KENT AVENUE

DIVISION AVENUE

CONC. SIDEWALK



OWNER
KENT MEMBER LLC
505 FLUSHING AVE, BROOKLYN, NY 11205

CIVIL / PARKING ENGINEER
PHILIB HABIB AND ASSOCIATES
102 MADISON AVE # 11, NEW YORK, NY 10016

LANDSCAPE ARCHITECT
MPFP
120 BROADWAY 20TH FL, NEW YORK, NY 10271

LIGHTING DESIGNER
ONE LUX STUDIO
158 WEST 29TH STREET, FL 10, NEW YORK, NY 10001

LAND USE CONSULTANT
HERRICK FEINSTEIN LLP
TWO PARK AVENUE, NEW YORK, NY 10016

REV	DATE	DESCRIPTION
	3/24/2021	ULURP SUBMISSION
	11/03/2021	ULURP SUBMISSION
	06/22/2022	ULURP SUBMISSION
	09/08/2022	ULURP SUBMISSION
	01/11/2023	DPR REVIEW
	03/22/2023	ULURP SUBMISSION

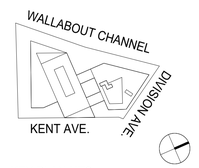

KEY PLAN:NTS

500 KENT

500 KENT AVENUE
BROOKLYN, NY 11249
ID #2019K0330

KEY & DIMENSION PLAN

SCALE: 1/16" = 1'-0"

DRAWING #:
L-100.00
___ of ___
DOB JOB:

3/22/2021 7:28:54 PM © MARVEL ARCHITECTS, PLLC 2018

GRADING LEGEND

FFE 13.00'	FINISH FLOOR ELEVATION
+ 13.00'	FINISH GRADE SPOT ELEVATION
BW 13.00'	BOTTOM OF WALL
TW 13.00'	TOP OF WALL
BC 13.00'	BOTTOM OF CURB
TC 13.00'	TOP OF CURB

LEGEND

- PROPERTY LINE
- SHORE PUBLIC WALKWAY ZR 62-62
- SUPPLEMENTAL PUBLIC ACCESS AREA ZR 62-64
- VISUAL CORRIDOR ZR 62-51
- PAA 2
- PAA 1
- WPAA BOUNDARY
- ILLUSTRATIVE BUILDING LINE
- U.S. PIER & BULKHEAD LINES
- PROPOSED BUILDING FOOTPRINT
- CLEAR PATH CIRCULATION PATH
- EXTERIOR BRICK PAVERS (1 / L600)
- ASPHALT PAVERS (2 / L600)
- CONCRETE PAVING (3 / L600)
- VEHICULAR ASPHALT (4 / L600)
- FIRE HYDRANT
- EXISTING POST
- EXISTING MANHOLE
- EXISTING SIGN
- EXISTING EMERGENCY PHONE
- OFFICE ACCESS POINT
- COMMERCIAL ACCESS
- LOADING DOCK UG 6B
- PARKING INGRESS/EGRESS
- EXISTING STREET VENT GRILLE
- EXISTING CATCH BASIN
- EXISTING BUS STOP
- EXISTING TREE
- PROPOSED TREE (1 / L601)
- BIKE RACK (4 / L602)
- TRASH RECEPTACLE (3 / L602)
- PROPOSED LIGHTPOLE (6 / L602)
- PROPOSED WHEELCHAIR SEATING
- BENCH TYP. (4 / L602)
- BULKHEAD WITH GUARDRAIL (7 / L602)
- STAIRS (7 / L600)
- CONCRETE WALL OR SEATWALL (5 & 6 / L600)
- TABLE AND CHAIRS (1&2 / L603)
- CHAISE LOUNGE (3 / L603)

625 KENT AVE.
LOT:1
BLOCK 2023

VACANT LAND

CENTER LINE OF VISUAL CORRIDOR

15' CLEAR AREA

OFFICE

COVERED ADDITIONAL OPEN SPACE
FFE 17.00'

BACK OF HOUSE

MECHANICAL

LOADING

ADDITIONAL OPEN SPACE

BUILDING LOBBY
FFE 17.00'

LOADING

COVERED ADDITIONAL OPEN SPACE

RETAIL
FFE 12.00'

COVERED ADDITIONAL OPEN SPACE
FFE 12.00'

RETAIL

BUILDING LOBBY
+ FFE 16.00'

PARKING

RETAIL
+ FFE 18.00'

ADDITIONAL OPEN SPACE

KENT AVENUE

DIVISION AVENUE

SONIC BOARDWALK

WALLABOUT CHANNEL

DIVISION AVE.

KENT AVE.



OWNER
KENT MEMBER LLC
505 FLUSHING AVE, BROOKLYN, NY 11205

CIVIL / PARKING ENGINEER
PHILIB HABIB AND ASSOCIATES
102 MADISON AVE # 11, NEW YORK, NY 10016

LANDSCAPE ARCHITECT
MPFP
120 BROADWAY 20TH FL, NEW YORK, NY 10271

LIGHTING DESIGNER
ONE LUX STUDIO
158 WEST 29TH STREET, FL 10, NEW YORK, NY 10001

LAND USE CONSULTANT
HERRICK FEINSTEIN LLP
TWO PARK AVENUE, NEW YORK, NY 10016

REV	DATE	DESCRIPTION
	3/24/2021	ULURP SUBMISSION
	11/03/2021	ULURP SUBMISSION
	06/22/2022	ULURP SUBMISSION
	09/08/2022	ULURP SUBMISSION
	01/11/2023	DPR REVIEW
	03/22/2023	ULURP SUBMISSION

KEY PLAN:NTS

500 KENT

500 KENT AVENUE
BROOKLYN, NY 11249
ID #2019K0330

GRADING PLAN

SCALE: 1/16" = 1'-0"

DRAWING #:
L-200.00
___ of ___
DOB JOB:

3/22/2021 7:28:54 PM © MARVEL ARCHITECTS, PLLC 2018

LEGEND

- PROPERTY LINE
- SHORE PUBLIC WALKWAY ZR 62-62
- SUPPLEMENTAL PUBLIC ACCESS AREA ZR 62-64
- VISUAL CORRIDOR ZR 62-51
- PAA 2
- PAA 1
- WPAA BOUNDARY
- ILLUSTRATIVE BUILDING LINE
- U.S. PIER & BULKHEAD LINES
- OFFICE ACCESS POINT
- COMMERCIAL ACCESS
- LOADING DOCK UG 6B
- PARKING INGRESS/EGRESS
- EXISTING STREET VENT GRILLE
- EXISTING CATCH BASIN
- EXISTING BUS STOP
- EXISTING TREE
- PROPOSED TREE (L601)
- BIKE RACK (4 / L602)
- TRASH RECEPTACLE (3 / L602)
- PROPOSED LIGHTPOLE (6 / L602)
- PROPOSED WHEELCHAIR SEATING
- BENCH TYP. (4 / L602)
- BULKHEAD WITH GUARDRAIL (7 / L602)
- STAIRS (7 / L600)
- CONCRETE WALL OR SEATWALL (5 & 6 / L600)

PLANTING LEGEND

- PLANTER BED
- LM- BIG BLUE LIRIOPE
- LAWN
- SS -LITTLE BLUE STEM
- AG- BIG BLUE STEM
- PO- KARLEY ROSE FOUNDATION GRASS
- PV- SWITCHGRASS
- PAA 1/ PAA 2/ VISUAL CORRIDOR PLANTING



OWNER
KENT MEMBER LLC
505 FLUSHING AVE, BROOKLYN, NY 11205

CIVIL / PARKING ENGINEER
PHILIB HABIB AND ASSOCIATES
102 MADISON AVE # 11, NEW YORK, NY 10016

LANDSCAPE ARCHITECT
MPFP
120 BROADWAY 20TH FL, NEW YORK, NY 10271

LIGHTING DESIGNER
ONE LUX STUDIO
158 WEST 29TH STREET, FL 10, NEW YORK, NY 10001

LAND USE CONSULTANT
HERRICK FEINSTEIN LLP
TWO PARK AVENUE, NEW YORK, NY 10016

REV	DATE	DESCRIPTION
	3/24/2021	ULURP SUBMISSION
	11/03/2021	ULURP SUBMISSION
	06/22/2022	ULURP SUBMISSION
	09/08/2022	ULURP SUBMISSION
	01/11/2023	DPR REVIEW
	03/22/2023	ULURP SUBMISSION

625 KENT AVE.
LOT:1
BLOCK 2023

VACANT LAND

OFFICE

COVERED ADDITIONAL OPEN SPACE

BACK OF HOUSE

MECHANICAL

LOADING

BUILDING LOBBY

RETAIL

PARKING

ADDITIONAL OPEN SPACE

CENTER LINE OF VISUAL CORRIDOR

15' CLEAR AREA

50'-0" VISUAL CORRIDOR

KENT AVENUE

DIVISION AVENUE

WALLABOUT CHANNEL

KENT AVE.

KEY PLAN:NTS

500 KENT

500 KENT AVENUE
BROOKLYN, NY 11249

ID #2019K0330

PLANTING PLAN

SCALE: 1/16" = 1'-0"

DRAWING #:

L-300.00

___ of ___

DOB JOB:

3/22/2021 7:28:54 PM

© MARVEL ARCHITECTS, PLLC 2018



NEW HORIZON ELM



HERITAGE RIVER BIRCH

1 TREES PRECEDENT

SCALE: NTS



BIG BLUE LILYTURF



GRO-LOW SUMAC



COMMON BEARBERRY



RUGOSA ROSE



SWITCH GRASS



KARLEY ROSE FOUNTAIN GRASS



LITTLE BLUE STEM



SWITCH GRASS



BROOMSEDGE



SLIM STEM REEDGRASS

2 SHRUBS, GRASSES, & GROUNDCOVERS PRECEDENT

SCALE: NTS

WATERFRONT SPA + SPAA PLANTING SCHEDULE

KEY	BOTANICAL NAME	COMMON NAME	QTY.	SIZE	ROOT	SPACING	COMMENTS	NATIVE PLANTS
TREES								
BH	BETULA NIGRA 'HERITAGE'	HERITAGE RIVER BIRCH	26	16'-18' HT	B&B	AS SHOWN	3 STEM MIN	YES
UN	ULMUS 'NEW HORIZON'	NEW HORIZON ELM	17	4-4½" CAL	B&B	AS SHOWN		NO
ORNAMENTAL GRASSES								
AG	ANDROPOGON GERARDII	BIG BLUESTEM GRASS	382	5 GAL.	CONT.	24" O.C.		YES
PO	PENNISETUM ORIENTALE	KARLEY ROSE FOUNTAIN GRASS	531	5 GAL	CONT.	24" O.C.		NO
PV	PANICUM VIRGATUM	SWITCHGRASS	405	5 GAL	CONT.	16" O.C.		YES
SS	SCHIZACHYRIUM SCOPARIUM	LITTLE BLUESTEM GRASS	1498	3 GAL.	CONT.	12" O.C.		YES
GROUNDCOVER								
LM	LIRIOPE MUSCARI 'BIG BLUE'	BIG BLUE LILY TURF	1881	2 GAL.	CONT.	12" O.C.		NO

PAA 1 TREE PLANTING SCHEDULE

KEY	BOTANICAL NAME	COMMON NAME	QTY.	SIZE	ROOT	SPACING	COMMENTS	NATIVE PLANTS
TREES								
BH	BETULA NIGRA 'HERITAGE'	HERITAGE RIVER BIRCH	10	16'-18' HT	B&B	AS SHOWN	3 STEM MIN	YES
UN	ULMUS 'NEW HORIZON'	NEW HORIZON ELM	4	4-4½" CAL	B&B	AS SHOWN		NO

VISUAL CORRIDOR/PAA 2 TREE PLANTING SCHEDULE

KEY	BOTANICAL NAME	COMMON NAME	QTY.	SIZE	ROOT	SPACING	COMMENTS	NATIVE PLANTS
TREES								
BH	BETULA NIGRA 'HERITAGE'	HERITAGE RIVER BIRCH	19	16'-18' HT	B&B	AS SHOWN	3 STEM MIN	YES
UN	ULMUS 'NEW HORIZON'	NEW HORIZON ELM	10	4-4½" CAL	B&B	AS SHOWN		NO

SHORE PUBLIC WALKWAY
SPA 1 = 412 SF
SPA 2 = 438 SF
SPA 3 = 85 SF
SPA 4 = 190 SF
SPA 5 = 637 SF
SPA 6 = 38 SF
SPA 7 = 323 SF
SPA 8 = 33 SF
SPA 9 = 428 SF
SPA 10 = 230 SF
SPA 11 = 172 SF
SPA 12 = 575 SF
SPA 13 = 317 SF
SPA 14 = 602 SF
SPA 15 = 801 SF
SPA 16 = 872 SF
SPA 17 = 24 SF
SPA 18 = 83 SF
SPA 19 = 717 SF
SPA 20 = 70 SF
SPA 21 = 243 SF

TOTAL = 7,295 SF

SUPPLEMENTAL PUBLIC ACCESS AREA
SPAA 1 = 642 SF
SPAA 2 = 352 SF
SPAA 3 = 524 SF

TOTAL = 1,518 SF

PAA 1
PAA 1, 1 = 662 SF
PAA 1, 2 = 345 SF
PAA 1, 3 = 307 SF
PAA 1, 4 = 284 SF
PAA 1, 5 = 163 SF
PAA 1, 6 = 192 SF
PAA 1, 7 = 630 SF
PAA 1, 8 = 217 SF
PAA 1, 9 = 125 SF

TOTAL = 2,925 SF

VISUAL CORRIDOR/ PAA 2
VC/PAA 2, 1 = 3,503 SF
VC/PAA 2, 2 = 3,705 SF
VC/PAA 2, 3 = 300 SF

TOTAL = 7,508 SF



OWNER
KENT MEMBER LLC
505 FLUSHING AVE, BROOKLYN, NY 11205

CIVIL / PARKING ENGINEER
PHILIB HABIB AND ASSOCIATES
102 MADISON AVE # 11, NEW YORK, NY 10016

LANDSCAPE ARCHITECT
MPFP
120 BROADWAY 20TH FL, NEW YORK, NY 10271

LIGHTING DESIGNER
ONE LUX STUDIO
158 WEST 29TH STREET, FL 10, NEW YORK, NY 10001

LAND USE CONSULTANT
HERRICK FEINSTEIN LLP
TWO PARK AVENUE, NEW YORK, NY 10016

REV	DATE	DESCRIPTION
	3/24/2021	ULURP SUBMISSION
	11/03/2021	ULURP SUBMISSION
	06/22/2022	ULURP SUBMISSION
	09/08/2022	ULURP SUBMISSION
	01/11/2023	DPR REVIEW
	03/22/2023	ULURP SUBMISSION

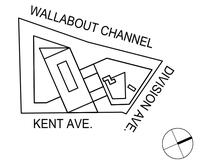

KEY PLAN:NTS

500 KENT

500 KENT AVENUE
BROOKLYN, NY 11249

ID #2019K0330

PLANT PRECEDENT IMAGES

SCALE:

DRAWING #:
L-301.00
___ of ___

DOB JOB:

3/22/2021 7:28:54 PM © MARVEL ARCHITECTS, PLLC 2018

MATERIALS LEGEND

	1 / L600 ASPHALT/PRECAST PAVERS SIZE: 12" X 6" X 3"	MANUFACTURER: HANOVER NUMBER: A80046 FINISH: GROUND
	10 / L600 EXTERIOR BRICK PAVING SIZE: 3"x11" MANUFACTURER: BELDEN BRICK MODEL CC/354 BLACK METALLIC	
	a / L600 TINTED CONCRETE PAVING SIZE: 5' X 5'	
	VEHICULAR ASPHALT	
	2&3 / L601 SHRUBS, GRASSES & GROUNDCOVERS	
	4 / L601 LAWN	

LEGEND

- PROPERTY LINE
- SHORE PUBLIC WALKWAY ZR 62-62
- SUPPLEMENTAL PUBLIC ACCESS AREA ZR 62-64
- VISUAL CORRIDOR ZR 62-51
- PAA 2
- PAA 1
- WPAA BOUNDARY
- ILLUSTRATIVE BUILDING LINE
- U.S. PIER & BULKHEAD LINES
- PROPOSED BUILDING FOOTPRINT
- OFFICE ACCESS POINT
- COMMERCIAL ACCESS
- LOADING DOCK I/G 6B
- PARKING INGRESS/EGRESS
- EXISTING STREET VENT GRILLE
- EXISTING CATCH BASIN
- EXISTING BUS STOP
- EXISTING TREE
- PROPOSED TREE 1 / L601
- BIKE RACK 4 / L602
- TRASH RECEPTACLE 3 / L602
- PROPOSED LIGHTPOLE 6 / L602
- PROPOSED WHEELCHAIR SEATING
- BENCH TYP. 4 / L602
- BULKHEAD WITH GUARDRAIL 7 / L602
- STAIRS 7 / L600

625 KENT AVE.
LOT:1
BLOCK 2023

VACANT LAND

OFFICE

BACK OF HOUSE

MECHANICAL

LOADING

BUILDING LOBBY

RETAIL

PARKING

ASPHALT /PRECAST PAVERS 1 / L600

TINTED CONCRETE PAVING a / L600

EXTERIOR BRICK PAVING 10 / L600

PRECAST STAIRS 8 / L600

COVERED ADDITIONAL OPEN SPACE

ADDITIONAL OPEN SPACE

6'-0" SPAA CLEAR PATH TYP.

10'-0" VC/ PAA 2 CLEAR PATH TYP.

50'-0" VISUAL CORRIDOR

CENTER LINE OF VISUAL CORRIDOR

15' CLEAR AREA

KENT AVENUE

DIVISION AVENUE

10' CONC. SIDEWALK

WALLABOUT CHANNEL

DIVISION AVE.

KENT AVE.



OWNER
KENT MEMBER LLC
505 FLUSHING AVE, BROOKLYN, NY 11205

CIVIL / PARKING ENGINEER
PHILIB HABIB AND ASSOCIATES
102 MADISON AVE # 11, NEW YORK, NY 10016

LANDSCAPE ARCHITECT
MPFP
120 BROADWAY 20TH FL, NEW YORK, NY 10271

LIGHTING DESIGNER
ONE LUX STUDIO
158 WEST 29TH STREET, FL 10, NEW YORK, NY 10001

LAND USE CONSULTANT
HERRICK FEINSTEIN LLP
TWO PARK AVENUE, NEW YORK, NY 10016

REV	DATE	DESCRIPTION
	3/24/2021	ULURP SUBMISSION
	11/03/2021	ULURP SUBMISSION
	06/22/2022	ULURP SUBMISSION
	09/08/2022	ULURP SUBMISSION
	01/11/2023	DPR REVIEW
	03/22/2023	ULURP SUBMISSION

KEY PLAN:NTS

500 KENT

500 KENT AVENUE
BROOKLYN, NY 11249
ID #2019K0330

MATERIALS PLAN

SCALE: 1/16" = 1'-0"

DRAWING #:
L-400.00
___ of ___
DOB JOB:

3/22/2021 7:28:54 PM

© MARVEL ARCHITECTS, PLLC 2018

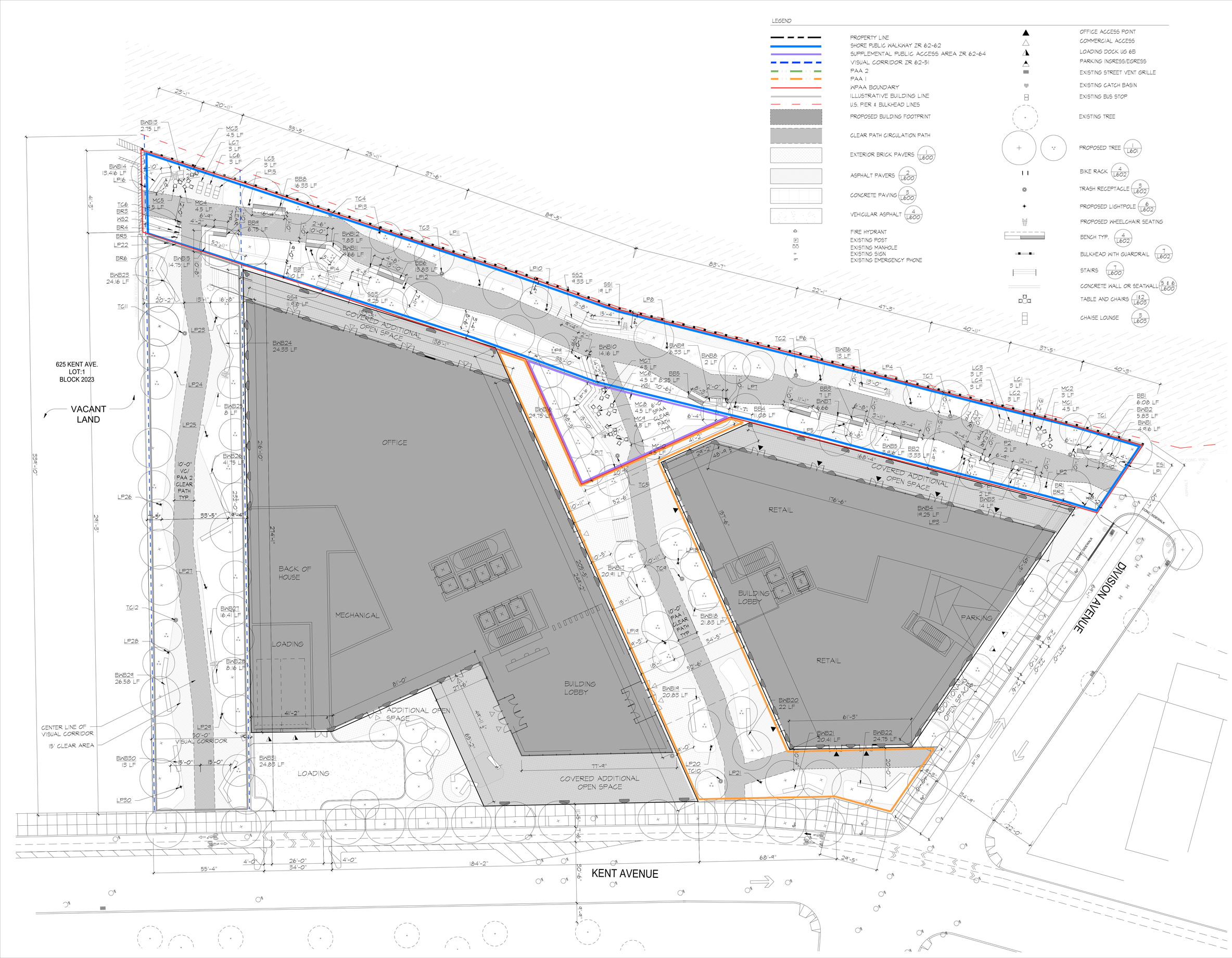



OWNER
KENT MEMBER LLC
505 FLUSHING AVE, BROOKLYN, NY 11205

CIVIL / PARKING ENGINEER
PHILIB HABIB AND ASSOCIATES
102 MADISON AVE # 11, NEW YORK, NY 10016

LANDSCAPE ARCHITECT
MPFP
120 BROADWAY 20TH FL, NEW YORK, NY 10271

LIGHTING DESIGNER
ONE LUX STUDIO
158 WEST 29TH STREET, FL 10, NEW YORK, NY 10001

LAND USE CONSULTANT
HERRICK FEINSTEIN LLP
TWO PARK AVENUE, NEW YORK, NY 10016

REV	DATE	DESCRIPTION
	3/24/2021	ULURP SUBMISSION
	11/03/2021	ULURP SUBMISSION
	06/22/2022	ULURP SUBMISSION
	09/08/2022	ULURP SUBMISSION
	01/11/2023	DPR REVIEW
	03/22/2023	ULURP SUBMISSION

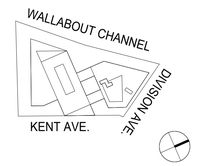

KEY PLAN:NTS

500 KENT

500 KENT AVENUE
BROOKLYN, NY 11249
ID #2019K0330

FURNITURE PLAN

SCALE: 1/16" = 1'-0"

DRAWING #:
L-401.00
___ of ___
DOB JOB:

3/22/2021 7:28:54 PM © MARVEL ARCHITECTS, PLLC 2018

SHORE PUBLIC WALKWAY AREA SEATING SCHEDULE

ID / TAG	TYPE	QTY.	SEATING TOTAL
BB1	BACKED BENCH	1	6.08 LF BACKED
BB2	BACKED BENCH	1	13.33 LF BACKED
BB3	BACKED BENCH	1	6.66 LF BACKED
BB4	BACKED BENCH	1	11.08 LF BACKED
BB5	BACKED BENCH	1	8.25 LF BACKED
BB6	BACKED BENCH	1	13.83 LF BACKED
BB7	BACKED BENCH	1	10 LF BACKED
BB8	BACKED BENCH	1	16.33 LF BACKED
BB9	BACKED BENCH	1	6.75 LF BACKED
TOTAL		9	92.31 LF OF BACKED BENCH
BWB1	BACKLESS BENCH	1	4.916 LF BACKLESS BENCH
BWB2	BACKLESS BENCH	1	5.83 LF BACKLESS BENCH
BWB3	BACKLESS BENCH	1	14 LF BACKLESS BENCH
BWB4	BACKLESS BENCH	1	19.25 LF BACKLESS BENCH
BWB5	BACKLESS BENCH	1	3.916 LF BACKLESS BENCH
BWB6	BACKLESS BENCH	1	13 LF BACKLESS BENCH
BWB7	BACKLESS BENCH	1	6.66 LF BACKLESS BENCH
BWB8	BACKLESS BENCH	1	2 LF BACKLESS BENCH
BWB9	BACKLESS BENCH	1	6.33 LF BACKLESS BENCH
BWB10	BACKLESS BENCH	1	14.16 LF BACKLESS BENCH
BWB11	BACKLESS BENCH	1	4.66 LF BACKLESS BENCH
BWB12	BACKLESS BENCH	1	7.83 LF BACKLESS BENCH
BWB13	BACKLESS BENCH	1	2.75 LF BACKLESS BENCH
BWB14	BACKLESS BENCH	1	13.416 LF BACKLESS BENCH
BWB15	BACKLESS BENCH	1	10.66 LF BACKLESS BENCH
TOTAL		15	129.378 LF OF BACKLESS BENCH
MC1	MOVABLE CHAIR	3	4.5 LF MOVABLE CHAIR
MC2	MOVABLE CHAIR	3	3 LF MOVABLE CHAIR
MC3	MOVABLE CHAIR	3	4.5 LF MOVABLE CHAIR
MC4	MOVABLE CHAIR	3	4.5 LF MOVABLE CHAIR
MC5	MOVABLE CHAIR	3	4.5 LF MOVABLE CHAIR
TOTAL		15	21.00 LF MOVABLE CHAIR
LC1	LOUNGE CHAIR	1	3 LF LOUNGE CHAIR
LC2	LOUNGE CHAIR	1	3 LF LOUNGE CHAIR
LC3	LOUNGE CHAIR	1	3 LF LOUNGE CHAIR
LC4	LOUNGE CHAIR	1	3 LF LOUNGE CHAIR
LC5	LOUNGE CHAIR	1	3 LF LOUNGE CHAIR
LC6	LOUNGE CHAIR	1	3 LF LOUNGE CHAIR
LC7	LOUNGE CHAIR	1	3 LF LOUNGE CHAIR
TOTAL		7	21 LF LOUNGE CHAIR
SS1	SEATING STEP	1	19 LF SEATING STEP
SS2	SEATING STEP	1	9.33 LF SEATING STEP
SS3	SEATING STEP	1	9.25 LF SEATING STEP
SS4	SEATING STEP	1	11.916 LF SEATING STEP
TOTAL			49.496 LF SEATING STEP
P1	SEATING POD	1	2 LF POD
P2	SEATING POD	1	2 LF POD
TOTAL		2	4 LF POD

SHORE PUBLIC WALKWAY FURNISHING & SIGNAGE SCHEDULE

ID / TAG	TYPE	QTY.
TC1	TRASH CAN	1
TC2	TRASH CAN	1
TC3	TRASH CAN	1
TC4	TRASH CAN	1
TC6	TRASH CAN	1
TC7	TRASH CAN	1
TOTAL		6
ES1	ENTRY SIGN	1
WS2	WPAA SIGN	1
TOTAL		2
BR1	DOUBLE SIDED BIKE RACK	1
BR2	DOUBLE SIDED BIKE RACK	1
BR3	DOUBLE SIDED BIKE RACK	1
BR4	DOUBLE SIDED BIKE RACK	1
BR5	DOUBLE SIDED BIKE RACK	1
BR6	DOUBLE SIDED BIKE RACK	1
TOTAL		5
LP1	LIGHTPOLE	1
LP2	LIGHTPOLE	1
LP3	LIGHTPOLE	1
LP4	LIGHTPOLE	1
LP5	LIGHTPOLE	1
LP6	LIGHTPOLE	1
LP7	LIGHTPOLE	1
LP8	LIGHTPOLE	1
LP9	LIGHTPOLE	1
LP10	LIGHTPOLE	1
LP11	LIGHTPOLE	1
LP12	LIGHTPOLE	1
LP13	LIGHTPOLE	1
LP14	LIGHTPOLE	1
LP15	LIGHTPOLE	1
LP16	LIGHTPOLE	1
TOTAL		16

SHORE PUBLIC WALKWAY & SUPPLEMENTAL PUBLIC ACCESS AREA SEATNG REQUIRMENTS

SEATING REQ.	REQUIRED	PROVIDED	TYPES
TOTAL SEATING	309 LF	369.684 LF	
SEATING W/ BACKS	154.5 LF	156.81 LF	BB, MC, LC
SOCIAL SEATING	77.25 LF	68.50 LF	MC, LC, P
TABLES	51.50 SF	50 SF	
SHADED SEATING	61.80 LF	230.184	BB, BWB, SS,

SUPPLEMENTAL PUBLIC ACCESS AREA SEATING SCHEDULE

ID / TAG	TYPE	QTY.	SEATING TOTAL
BWB16	BACKLESS BENCH	1	30 LF BACKLESS BENCH
TOTAL		1	30 LF BACKLESS BENCH
MC6	MOVABLE CHAIR	3	4.5 LF MOVABLE CHAIR
MC7	MOVABLE CHAIR	3	4.5 LF MOVABLE CHAIR
MC8	MOVABLE CHAIR	3	4.5 LF MOVABLE CHAIR
MC9	MOVABLE CHAIR	3	4.5 LF MOVABLE CHAIR
MC10	MOVABLE CHAIR	3	4.5 LF MOVABLE CHAIR
TOTAL		15	22.5 LF MOVABLE CHAIR

SUPPLEMENTAL PUBLIC ACCESS FURNISHING & SIGNAGE SCHEDULE

ID / TAG	TYPE	QTY.
TC5	TRASH CAN	1
TOTAL		1
WS1	WPAA SIGN	1
TOTAL		1
LP17	LIGHTPOLE	1
TOTAL		1

VISUAL CORRIDOR/ PUBLICLY ACCESSIBLE AREA 2 SEATING SCHEDULE

ID / TAG	TYPE	QTY.	SEATING TOTAL
BWB23	BACKLESS BENCH	1	24.16 LF BACKLESS BENCH
BWB24	BACKLESS BENCH	1	24.33 LF BACKLESS BENCH
BWB25	BACKLESS BENCH	1	8 LF BACKLESS BENCH
BWB26	BACKLESS BENCH	1	41.75 LF BACKLESS BENCH
BWB27	BACKLESS BENCH	1	16.41 LF BACKLESS BENCH
BWB28	BACKLESS BENCH	1	8.16 LF BACKLESS BENCH
BWB29	BACKLESS BENCH	1	26.58 LF BACKLESS BENCH
BWB30	BACKLESS BENCH	1	13 LF BACKLESS BENCH
BWB31	BACKLESS BENCH	1	24.83 LF BACKLESS BENCH
TOTAL		9	187.22 LF BACKLESS BENCH

VISUAL CORRIDOR/ PUBLICLY ACCESSIBLE AREA 2 FURNISHING

ID / TAG	TYPE	QTY.
TC11	TRASH CAN	1
TC12	TRASH CAN	1
TOTAL		2
LP22	LIGHTPOLE	1
LP23	LIGHTPOLE	1
LP24	LIGHTPOLE	1
LP25	LIGHTPOLE	1
LP26	LIGHTPOLE	1
LP27	LIGHTPOLE	1
LP28	LIGHTPOLE	1
LP29	LIGHTPOLE	1
LP30	LIGHTPOLE	1
TOTAL		9

PUBLICLY ACCESSIBLE AREA 1 SEATING SCHEDULE

ID / TAG	TYPE	QTY.	SEATING TOTAL
BWB17	BACKLESS BENCH	1	20.91 LF BACKLESS BENCH
BWB18	BACKLESS BENCH	1	21.83 LF BACKLESS BENCH
BWB19	BACKLESS BENCH	1	20.83 LF BACKLESS BENCH
BWB20	BACKLESS BENCH	1	22 LF BACKLESS BENCH
BWB21	BACKLESS BENCH	1	20.41 LF BACKLESS BENCH
BWB22	BACKLESS BENCH	1	24.75 LF BACKLESS BENCH
TOTAL		6	130.73 LF BACKLESS BENCH

ACCESSIBLE AREA 1 FURNISHING SCHEDULE

ID / TAG	TYPE	QTY.
TC9	TRASH CAN	1
TC10	TRASH CAN	1
TOTAL		2
LP18	LIGHTPOLE	1
LP19	LIGHTPOLE	1
LP20	LIGHTPOLE	1
LP21	LIGHTPOLE	1
TOTAL		4



OWNER
KENT MEMBER LLC
505 FLUSHING AVE, BROOKLYN, NY 11205

CIVIL / PARKING ENGINEER
PHILIB HABIB AND ASSOCIATES
102 MADISON AVE # 11, NEW YORK, NY 10016

LANDSCAPE ARCHITECT
MPFP
120 BROADWAY 20TH FL, NEW YORK, NY 10271

LIGHTING DESIGNER
ONE LUX STUDIO
158 WEST 29TH STREET, FL 10, NEW YORK, NY 10001

LAND USE CONSULTANT
HERRICK FEINSTEIN LLP
TWO PARK AVENUE, NEW YORK, NY 10016

REV	DATE	DESCRIPTION
	3/24/2021	ULURP SUBMISSION
	11/03/2021	ULURP SUBMISSION
	06/22/2022	ULURP SUBMISSION
	09/08/2022	ULURP SUBMISSION
	01/11/2023	DPR REVIEW
	03/22/2023	ULURP SUBMISSION

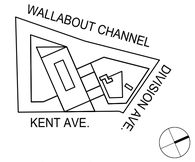

KEY PLAN:NTS

500 KENT

500 KENT AVENUE
BROOKLYN, NY 11249

ID #2019K0330

FURNITURE PLAN

SCALE:

DRAWING #:

L-402.00

___ of ___

DOB JOB:

3/22/2021 7:28:54 PM © MARVEL ARCHITECTS, PLLC 2018

LIGHTING LEGEND

XA — POLE LIGHT

CALCULATION SUMMARY				
LABEL	AVG/FC	MAX/FC	MIN/FC	AVG/MIN
SHORE PUBLIC WALKWAY	2.33	7.2	0.3	7.77
PEDESTRIAN PATHWAY	1.73	3.4	0.2	8.65
VISUAL CORRIDOR	2.01	4.1	0.3	6.70
REQUIREMENT			>=0.2	<=10

LEGEND

- PROPERTY LINE
- SHORE PUBLIC WALKWAY ZR 62-62
- SUPPLEMENTAL PUBLIC ACCESS AREA ZR 62-64
- VISUAL CORRIDOR ZR 62-51
- PAA 2
- PAA 1
- WPAA BOUNDARY
- ILLUSTRATIVE BUILDING LINE
- U.S. PIER & BULKHEAD LINES
- PROPOSED BUILDING FOOTPRINT
- CLEAR PATH CIRCULATION PATH
- EXTERIOR BRICK PAVERS (1 L600)
- ASPHALT PAVERS (2 L600)
- CONCRETE PAVING (3 L600)
- VEHICULAR ASPHALT (4 L600)
- FIRE HYDRANT
- EXISTING POST
- EXISTING MANHOLE
- EXISTING SIGN
- EXISTING EMERGENCY PHONE
- OFFICE ACCESS POINT
- COMMERCIAL ACCESS
- LOADING DOCK UG 6B
- PARKING INGRESS/EGRESS
- EXISTING STREET VENT GRILLE
- EXISTING CATCH BASIN
- EXISTING BUS STOP
- EXISTING TREE
- PROPOSED TREE (1 L601)
- BIKE RACK (4 L602)
- TRASH RECEPTACLE (3 L602)
- PROPOSED LIGHTPOLE (6 L602)
- PROPOSED WHEELCHAIR SEATING
- BENCH TYP. (4 L602)
- BULKHEAD WITH GUARDRAIL (7 L602)
- STAIRS (7 L600)
- CONCRETE WALL OR SEATWALL (5 & 6 L600)
- TABLE AND CHAIRS (142 L603)
- CHAISE LOUNGE (3 L603)

625 KENT AVE.
LOT:1
BLOCK 2023

VACANT LAND

OFFICE

COVERED ADDITIONAL OPEN SPACE

RETAIL

BACK OF HOUSE

MECHANICAL

LOADING

BUILDING LOBBY

PARKING

ADDITIONAL OPEN SPACE

10'-0" VC/ PAA 2 CLEAR PATH TYP.

6'-0" PAA CLEAR PATH TYP.

CENTER LINE OF VISUAL CORRIDOR

50'-0" VISUAL CORRIDOR

15' CLEAR AREA

DIVISION AVENUE

KENT AVENUE

WALLABOUT CHANNEL

KENT AVE.



OWNER
KENT MEMBER LLC
505 FLUSHING AVE, BROOKLYN, NY 11205

CIVIL / PARKING ENGINEER
PHILIB HABIB AND ASSOCIATES
102 MADISON AVE # 11, NEW YORK, NY 10016

LANDSCAPE ARCHITECT
MPFP
120 BROADWAY 20TH FL, NEW YORK, NY 10271

LIGHTING DESIGNER
ONE LUX STUDIO
158 WEST 29TH STREET, FL 10, NEW YORK, NY 10001

LAND USE CONSULTANT
HERRICK FEINSTEIN LLP
TWO PARK AVENUE, NEW YORK, NY 10016

REV	DATE	DESCRIPTION
	3/24/2021	ULURP SUBMISSION
	11/03/2021	ULURP SUBMISSION
	06/22/2022	ULURP SUBMISSION
	09/08/2022	ULURP SUBMISSION
	01/11/2023	DPR REVIEW
	03/22/2023	ULURP SUBMISSION

KEY PLAN:NTS

500 KENT

500 KENT AVENUE
BROOKLYN, NY 11249
ID #2019K0330

LIGHTING / PHOTOMETRIC PLAN

SCALE: 1/16" = 1'-0"

DRAWING #:
L-403.00
___ of ___
DOB JOB:

3/22/2021 7:28:54 PM © MARVEL ARCHITECTS, PLLC 2018

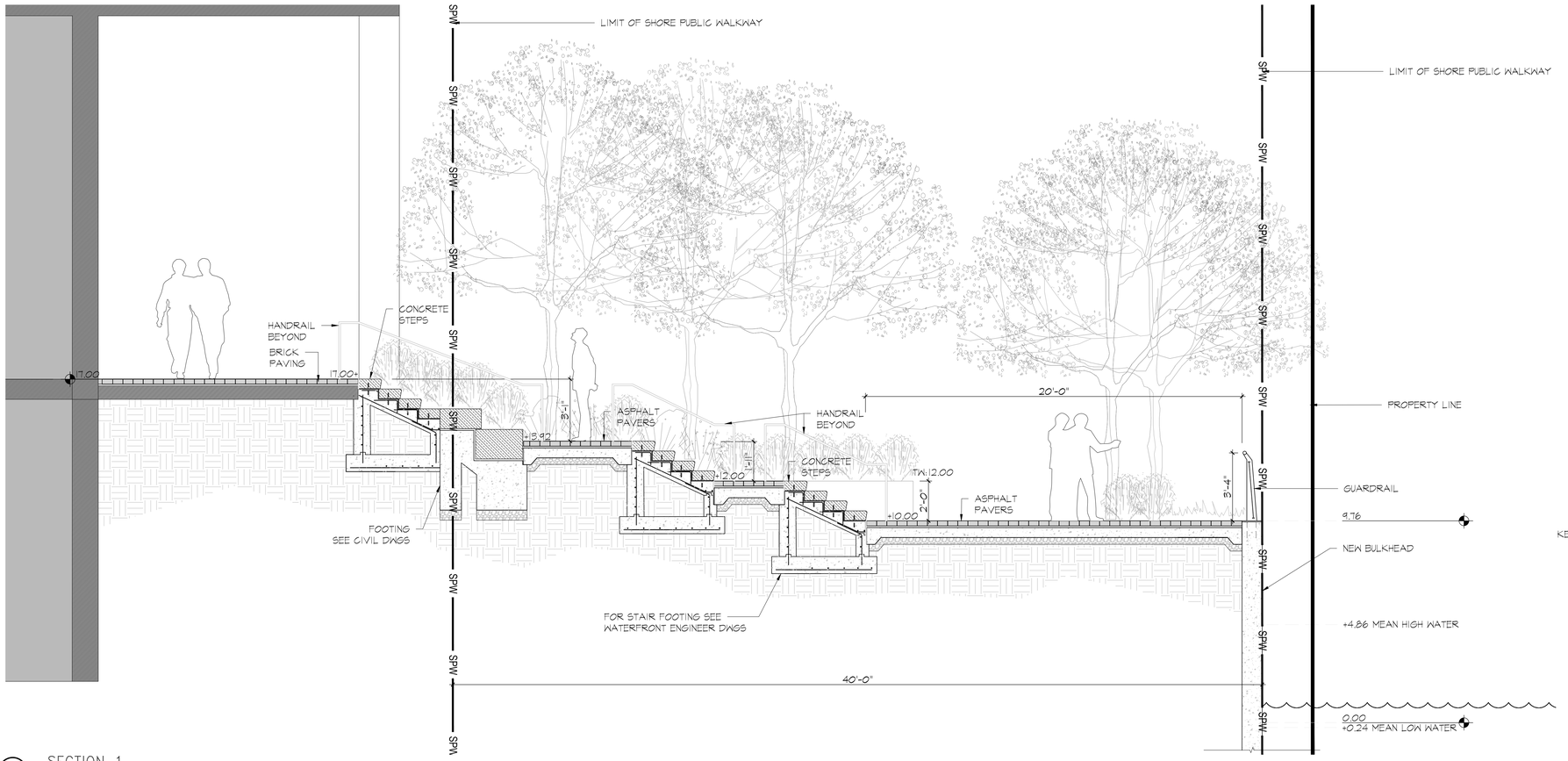

1 SECTION 1

SCALE: 3/8" = 1'-0"

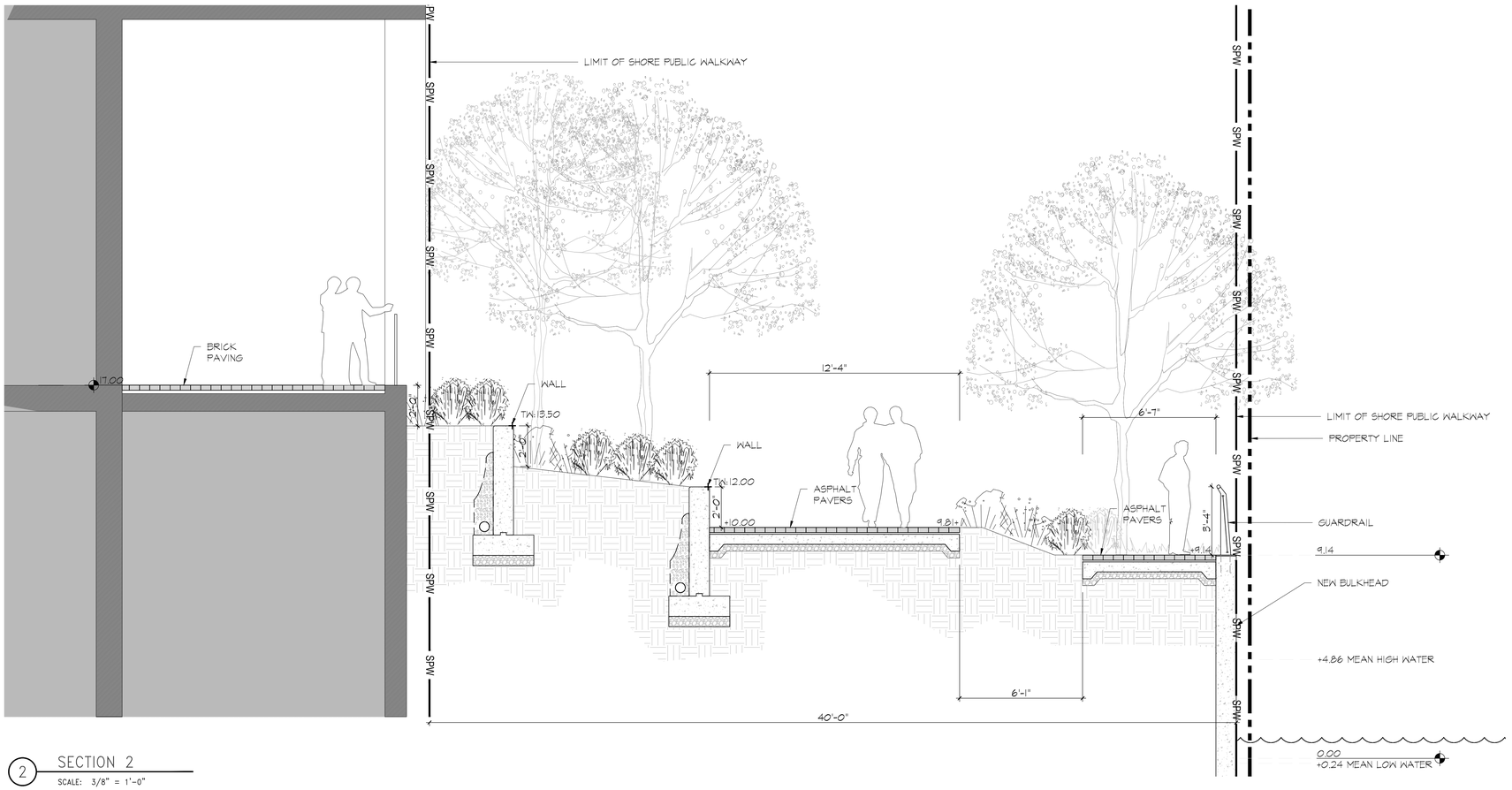

2 SECTION 2

SCALE: 3/8" = 1'-0"

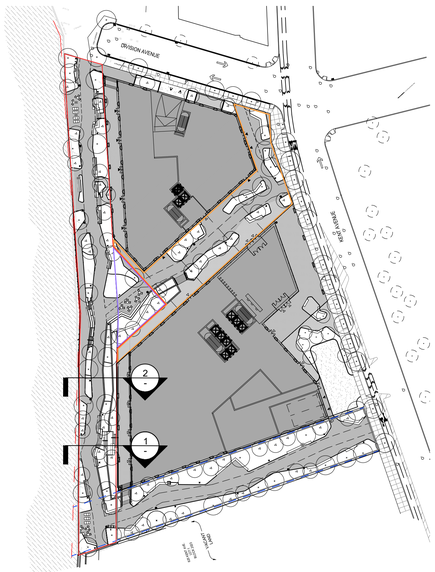

KEY PLAN



OWNER
KENT MEMBER LLC
505 FLUSHING AVE, BROOKLYN, NY 11205

CIVIL / PARKING ENGINEER
PHILIB HABIB AND ASSOCIATES
102 MADISON AVE # 11, NEW YORK, NY 10016

LANDSCAPE ARCHITECT
MPFP
120 BROADWAY 20TH FL, NEW YORK, NY 10271

LIGHTING DESIGNER
ONE LUX STUDIO
158 WEST 29TH STREET, FL 10, NEW YORK, NY 10001

LAND USE CONSULTANT
HERRICK FEINSTEIN LLP
TWO PARK AVENUE, NEW YORK, NY 10016

REV	DATE	DESCRIPTION
	3/24/2021	ULURP SUBMISSION
	11/03/2021	ULURP SUBMISSION
	06/22/2022	ULURP SUBMISSION
	09/08/2022	ULURP SUBMISSION
	01/11/2023	DPR REVIEW
	03/22/2023	ULURP SUBMISSION

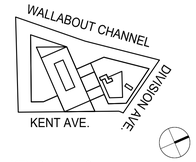

KEY PLAN:NTS

500 KENT

500 KENT AVENUE
BROOKLYN, NY 11249

ID #2019K0330

SECTIONS

SCALE:

DRAWING #:

L-500.00

___ of ___

DOB JOB:

3/22/2021 7:28:54 PM

© MARVEL ARCHITECTS, PLLC 2018

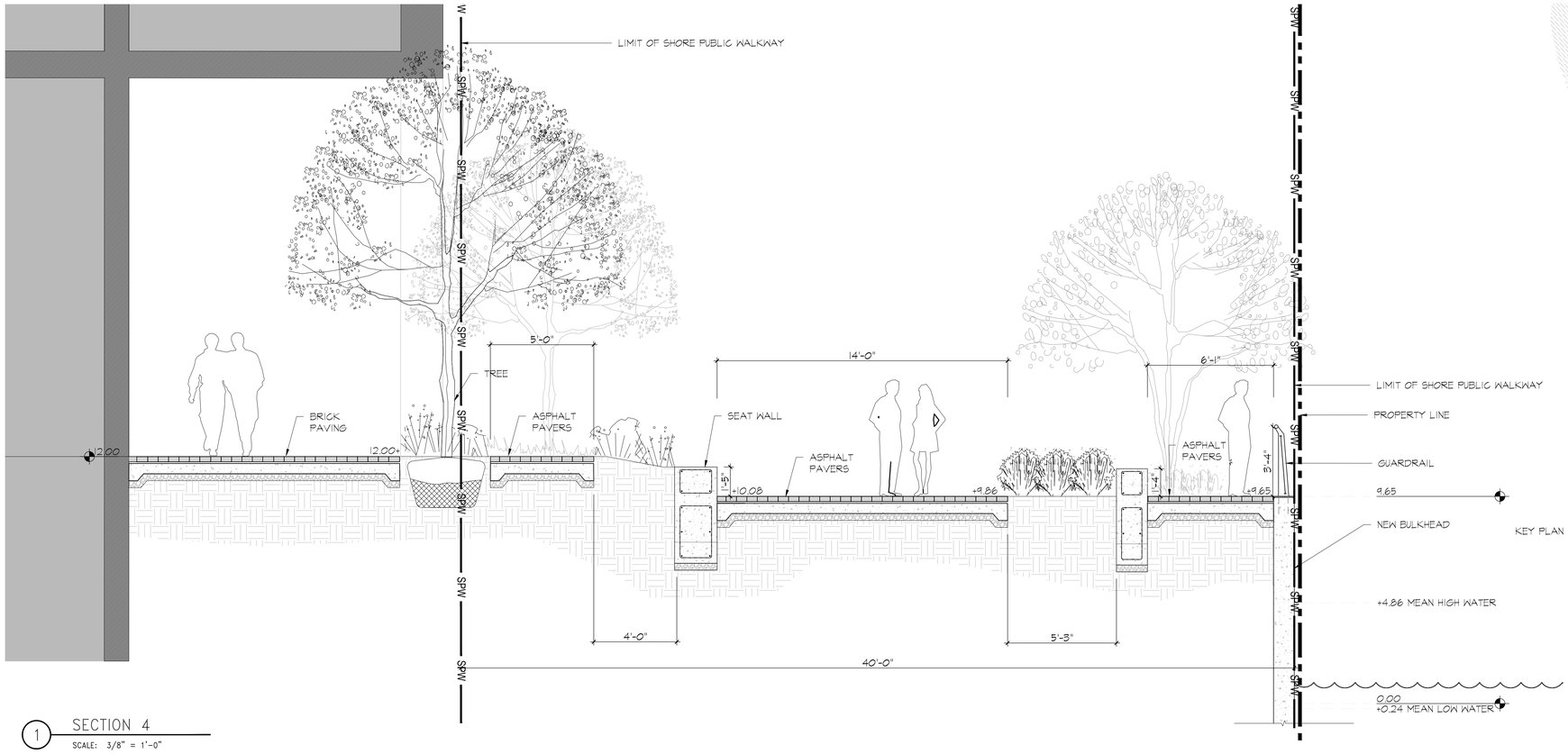

1 SECTION 4

SCALE: 3/8" = 1'-0"

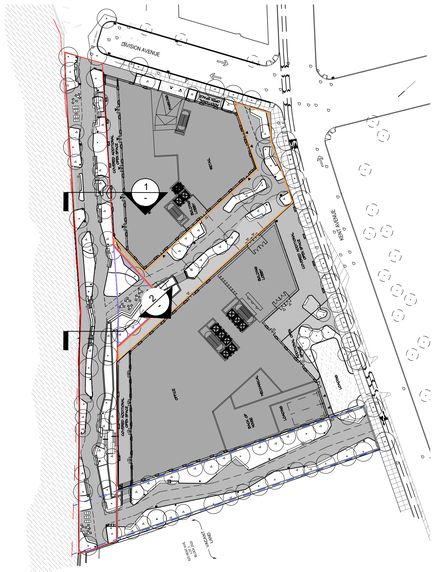

KEY PLAN

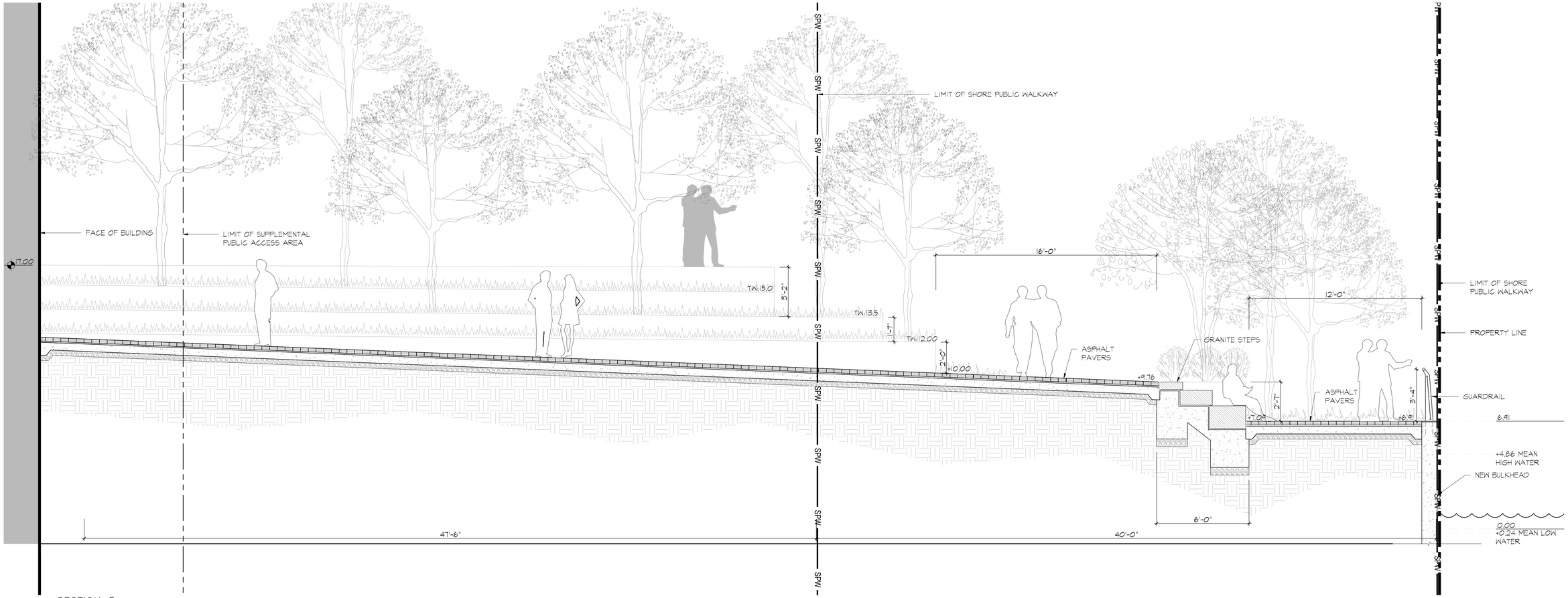

2 SECTION 3

SCALE: 3/8" = 1'-0"



OWNER
KENT MEMBER LLC
505 FLUSHING AVE, BROOKLYN, NY 11205

CIVIL / PARKING ENGINEER
PHILIB HABIB AND ASSOCIATES
102 MADISON AVE # 11, NEW YORK, NY 10016

LANDSCAPE ARCHITECT
MPFP
120 BROADWAY 20TH FL, NEW YORK, NY 10271

LIGHTING DESIGNER
ONE LUX STUDIO
158 WEST 29TH STREET, FL 10, NEW YORK, NY 10001

LAND USE CONSULTANT
HERRICK FEINSTEIN LLP
TWO PARK AVENUE, NEW YORK, NY 10016

REV	DATE	DESCRIPTION
	3/24/2021	ULURP SUBMISSION
	11/03/2021	ULURP SUBMISSION
	06/22/2022	ULURP SUBMISSION
	09/08/2022	ULURP SUBMISSION
	01/11/2023	DPR REVIEW
	03/22/2023	ULURP SUBMISSION

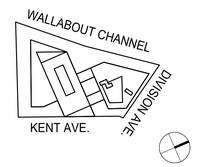

KEY PLAN:NTS

500 KENT

500 KENT AVENUE
BROOKLYN, NY 11249
ID #2019K0330

SECTIONS

SCALE:

DRAWING #:
L-501.00
___ of ___

DOB JOB:

3/22/2021 7:28:54 PM

© MARVEL ARCHITECTS, PLLC 2018

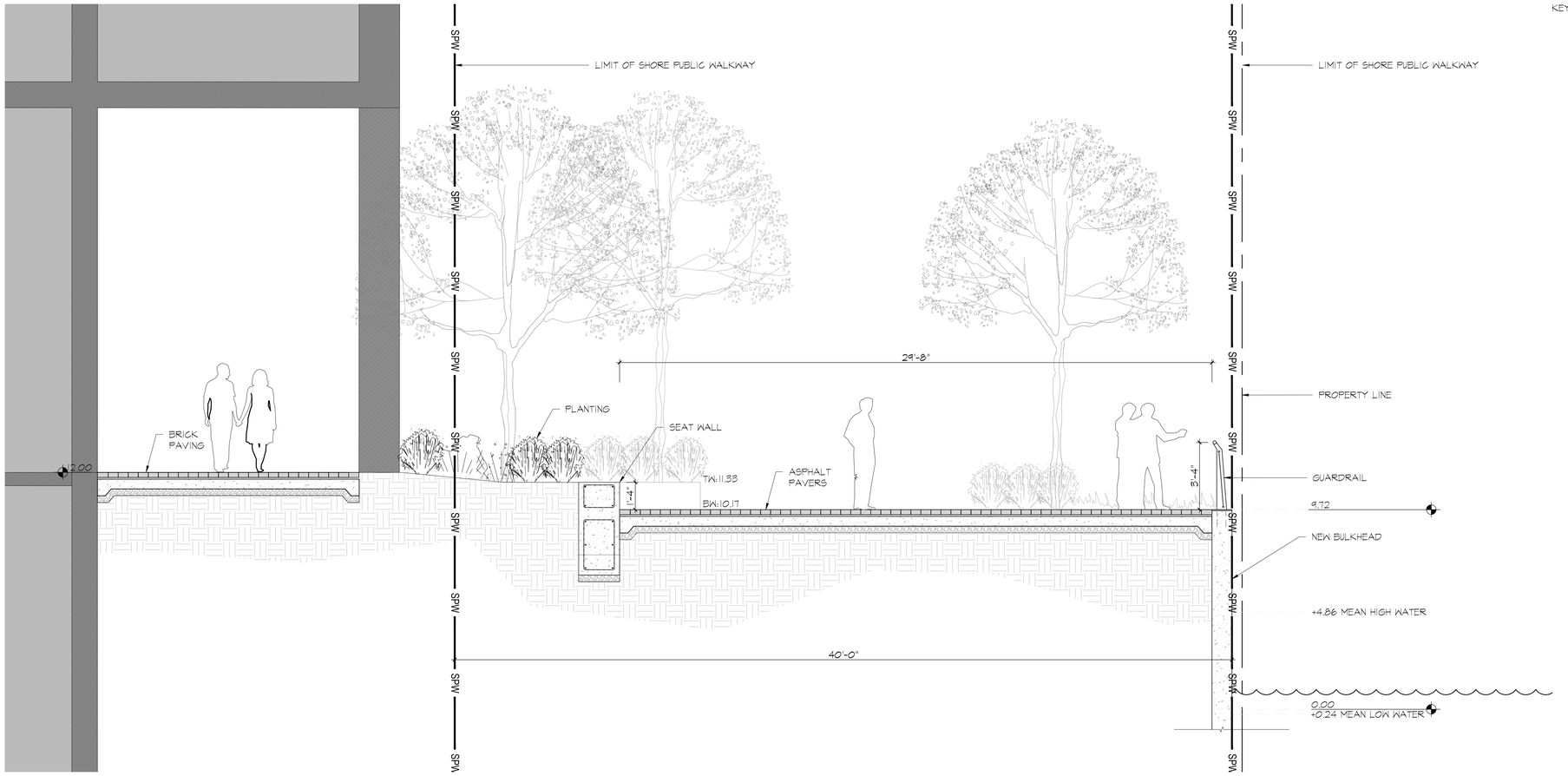

1 SECTION 5

SCALE: 3/8" = 1'-0"

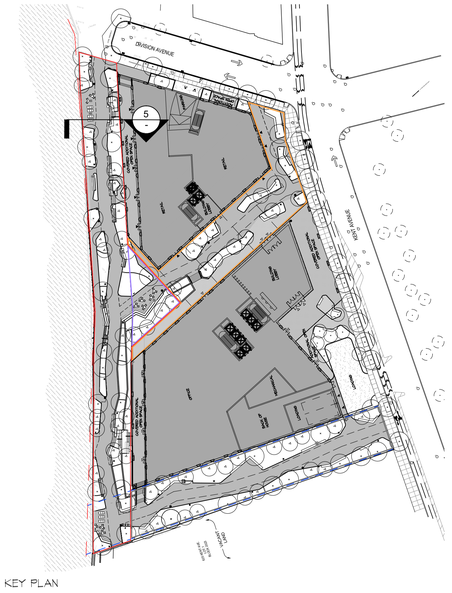

KEY PLAN



OWNER
KENT MEMBER LLC
505 FLUSHING AVE, BROOKLYN, NY 11205

CIVIL / PARKING ENGINEER
PHILIB HABIB AND ASSOCIATES
102 MADISON AVE # 11, NEW YORK, NY 10016

LANDSCAPE ARCHITECT
MPFP
120 BROADWAY 20TH FL, NEW YORK, NY 10271

LIGHTING DESIGNER
ONE LUX STUDIO
158 WEST 29TH STREET, FL 10, NEW YORK, NY 10001

LAND USE CONSULTANT
HERRICK FEINSTEIN LLP
TWO PARK AVENUE, NEW YORK, NY 10016

REV	DATE	DESCRIPTION
	3/24/2021	ULURP SUBMISSION
	11/03/2021	ULURP SUBMISSION
	06/22/2022	ULURP SUBMISSION
	09/08/2022	ULURP SUBMISSION
	01/11/2023	DPR REVIEW
	03/22/2023	ULURP SUBMISSION

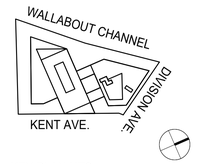

KEY PLAN:NTS

500 KENT

500 KENT AVENUE
BROOKLYN, NY 11249
ID #2019K0330

SECTIONS

SCALE:

DRAWING #:
L-502.00
___ of ___
DOB JOB:

3/22/2021 7:28:54 PM

© MARVEL ARCHITECTS, PLLC 2018

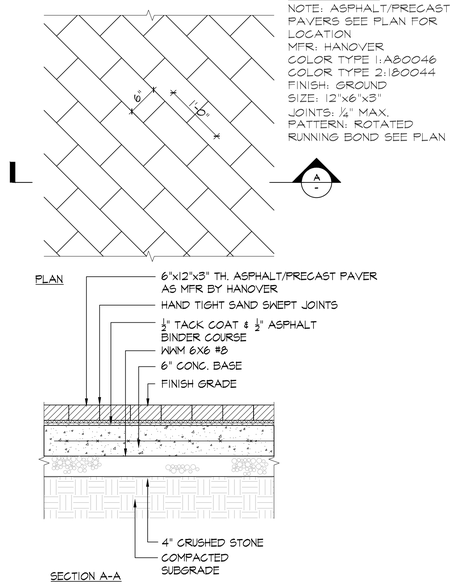

1 PAVERS ON GRADE DETAIL

SCALE: 1"=1'-0"

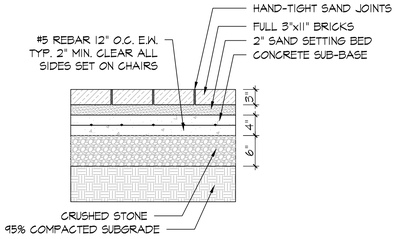

2 BRICK PAVING DETAIL

SCALE: 1"=1'-0"

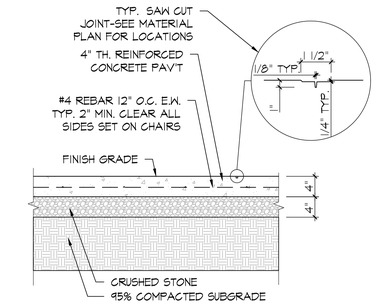

3 PEDESTRIAN CONCRETE DETAIL

SCALE: 1"=1'-0"

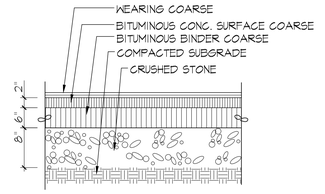

4 ASPHALT PAVING DETAIL

SCALE: 1"=1'-0"

5 WALL DETAIL

SCALE: 1"=1'-0"

6 SEAT WALL @ LAWN DETAIL

SCALE: 1"=1'-0"

7 TYP. STAIR DETAIL

SCALE: 1"=1'-0"



OWNER
KENT MEMBER LLC
505 FLUSHING AVE, BROOKLYN, NY 11205

CIVIL / PARKING ENGINEER
PHILIB HABIB AND ASSOCIATES
102 MADISON AVE # 11, NEW YORK, NY 10016

LANDSCAPE ARCHITECT
MPFP
120 BROADWAY 20TH FL, NEW YORK, NY 10271

LIGHTING DESIGNER
ONE LUX STUDIO
158 WEST 29TH STREET, FL 10, NEW YORK, NY 10001

LAND USE CONSULTANT
HERRICK FEINSTEIN LLP
TWO PARK AVENUE, NEW YORK, NY 10016

REV	DATE	DESCRIPTION
	3/24/2021	ULURP SUBMISSION
	11/03/2021	ULURP SUBMISSION
	06/22/2022	ULURP SUBMISSION
	09/08/2022	ULURP SUBMISSION
	01/11/2023	DPR REVIEW
	03/22/2023	ULURP SUBMISSION

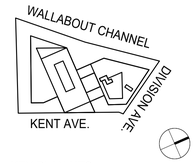

KEY PLAN:NTS

500 KENT

500 KENT AVENUE
BROOKLYN, NY 11249

ID #2019K0330

DETAILS

SCALE:

DRAWING #:

L-600.00

___ of ___

DOB JOB:

3/22/2021 7:28:54 PM

© MARVEL ARCHITECTS, PLLC 2018

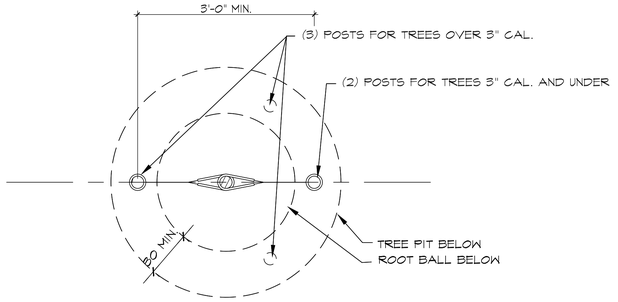

1 TREE PLANTING DETAIL ON GRADE

SCALE: 3/4"=1'-0"

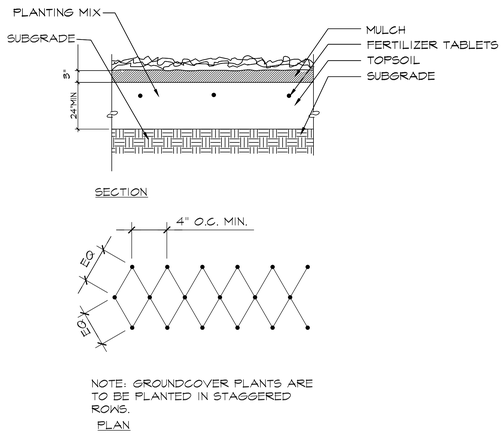

2 GROUNDCOVER PLANTING DETAIL

SCALE: 3/4"=1'-0"

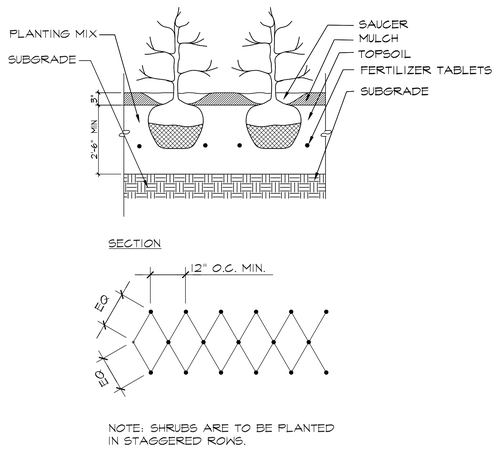

3 SHRUB PLANTING DETAIL

SCALE: 3/4"=1'-0"

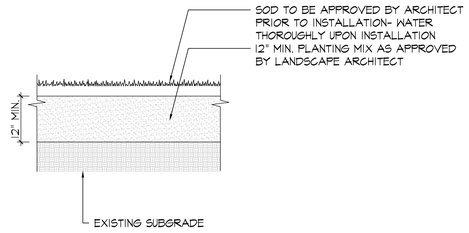

4 LAWN PLANTING DETAIL

SCALE: 3/4"=1'-0"

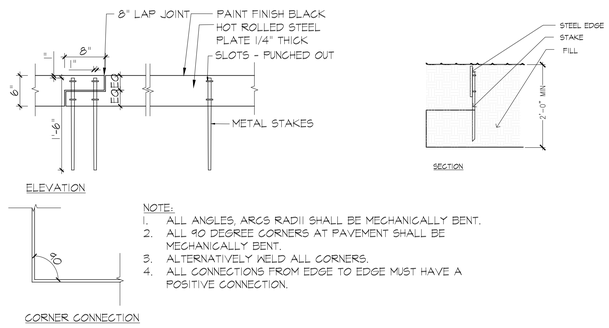

5 STEEL EDGE

SCALE: 1"=1'-0"



OWNER
KENT MEMBER LLC
505 FLUSHING AVE, BROOKLYN, NY 11205

CIVIL / PARKING ENGINEER
PHILIB HABIB AND ASSOCIATES
102 MADISON AVE # 11, NEW YORK, NY 10016

LANDSCAPE ARCHITECT
MPFP
120 BROADWAY 20TH FL, NEW YORK, NY 10271

LIGHTING DESIGNER
ONE LUX STUDIO
158 WEST 29TH STREET, FL 10, NEW YORK, NY 10001

LAND USE CONSULTANT
HERRICK FEINSTEIN LLP
TWO PARK AVENUE, NEW YORK, NY 10016

REV	DATE	DESCRIPTION
	3/24/2021	ULURP SUBMISSION
	11/03/2021	ULURP SUBMISSION
	06/22/2022	ULURP SUBMISSION
	09/08/2022	ULURP SUBMISSION
	01/11/2023	DPR REVIEW
	03/22/2023	ULURP SUBMISSION

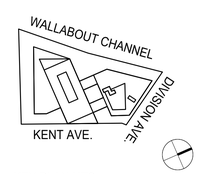

KEY PLAN:NTS

500 KENT

500 KENT AVENUE
BROOKLYN, NY 11249

ID #2019K0330

PLANTING DETAILS

SCALE:

DRAWING #:

L-601.00

___ of ___

DOB JOB:

3/22/2021 7:28:54 PM

© MARVEL ARCHITECTS, PLLC 2018

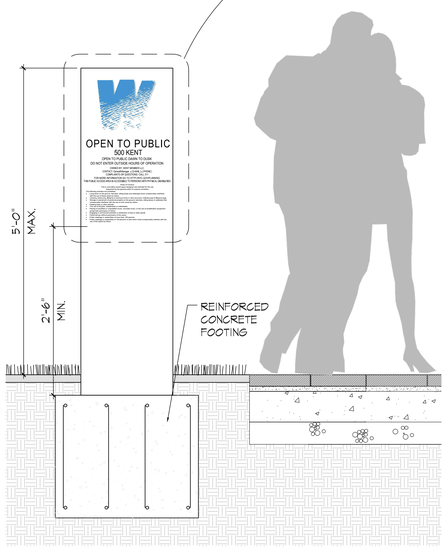

1 OPEN SPACE SIGN DETAIL

SCALE: 1"=1'-0"



6 LIGHTPOLE MOUNTING DETAIL

SCALE: 1"=1'-0"



MFG: BY LUMEC
MODEL: CANDELA POLE HEAD
COLOR: POWER COAT FINISH RAL 9006 (MATTE/SILVER)



OPEN TO PUBLIC

500 KENT

OPEN TO PUBLIC 6 AM TO 1 AM

DO NOT ENTER OUTSIDE HOURS OF OPERATION

OWNED BY: KENT MEMBER LLC

CONTACT: General Manager • [E-MAIL] • [PHONE]

COMPLAINTS OR QUESTIONS: CALL 311

FOR MORE INFORMATION GO TO HTTP://NYC.GOV/PLANNING

THIS PUBLIC ACCESS AREA IS ACCESSIBLE TO PERSONS WITH PHYSICAL DISABILITIES

Rules of Conduct

This is a privately owned space designed and intended for the use enjoyment by the general public for passive recreation.

The following activities are prohibited:

- Lying down on the ground, benches, sitting areas and walkways which unreasonably interferes with the use of these areas by others
- Camping, barbecuing, sleeping or erecting of tents or other structures, including tarps & sleeping bags
- Storage or placement of personal property on the ground, benches, sitting areas or walkways that unreasonably interferes with the use of such areas by others
- Feeding birds or other animals
- The use of bicycles, skateboards or rollerblades
- Playing of amplified or unamplified music, recorded music, or the use of amplification equipment except with permission of Owner
- Engaging in commercial activities or distribution of food or other goods.
- Performances without permission of the owner
- Public meetings or assemblies of more than 100 persons
- Public meetings or assemblies of 100 persons or less which could unreasonably interfere with the use of this space by others

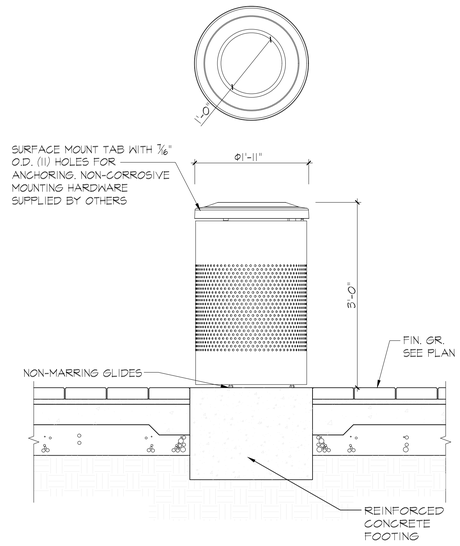

3 DPR PREFERRED TRASH RECEPTACLE ON GRADE

SCALE: 1"=1'-0"



SURFACE MOUNTED LITTER RECEPTACLE
MFR: MAGLIN
MODEL: 600
GALLONS: 32
COLOR: SILVER 14 GLOSS



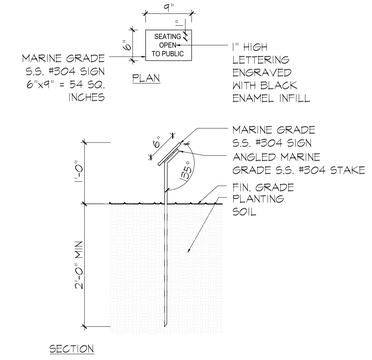

2 SEATING SIGN DETAIL

SCALE: 1"=1'-0"

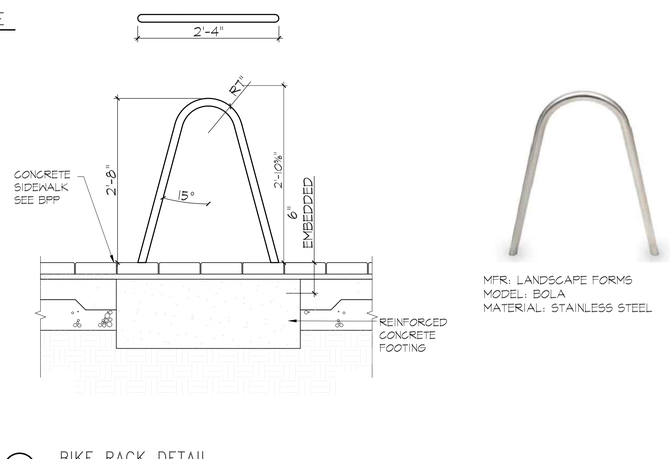

MFR: LANDSCAPE FORMS
MODEL: BOLA
MATERIAL: STAINLESS STEEL

4 BIKE RACK DETAIL

SCALE: 1"=1'-0"

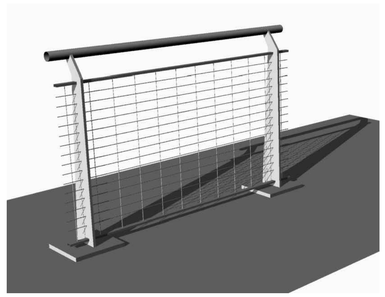

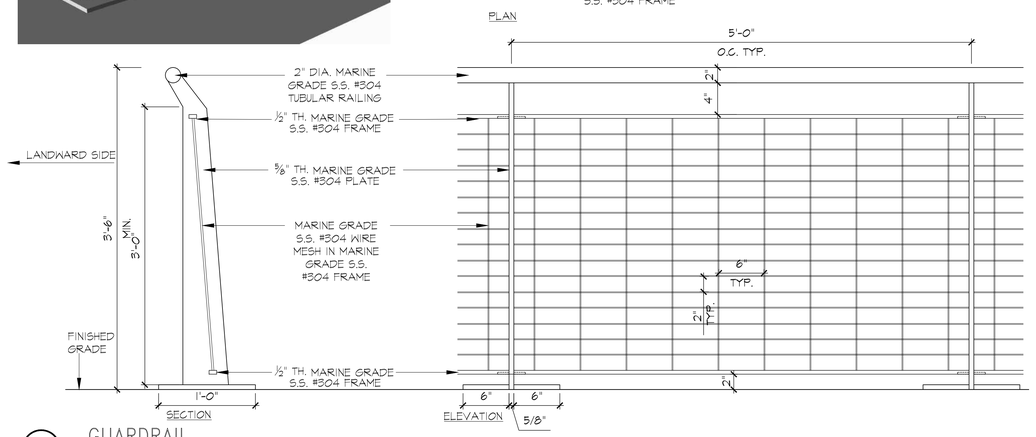

7 GUARDRAIL

SCALE: 1-1/2"=1'-0"

OWNER
KENT MEMBER LLC
505 FLUSHING AVE, BROOKLYN, NY 11205

CIVIL / PARKING ENGINEER
PHILIB HABIB AND ASSOCIATES
102 MADISON AVE # 11, NEW YORK, NY 10016

LANDSCAPE ARCHITECT
MPFP
120 BROADWAY 20TH FL, NEW YORK, NY 10271

LIGHTING DESIGNER
ONE LUX STUDIO
158 WEST 29TH STREET, FL 10, NEW YORK, NY 10001

LAND USE CONSULTANT
HERRICK FEINSTEIN LLP
TWO PARK AVENUE, NEW YORK, NY 10016

REV	DATE	DESCRIPTION
	3/24/2021	ULURP SUBMISSION
	11/03/2021	ULURP SUBMISSION
	06/22/2022	ULURP SUBMISSION
	09/08/2022	ULURP SUBMISSION
	01/11/2023	DPR REVIEW
	03/22/2023	ULURP SUBMISSION



KEY PLAN:NTS

500 KENT

500 KENT AVENUE
BROOKLYN, NY 11249

ID #2019K0330

SITE DETAILS

SCALE:

DRAWING #:

L-602.00

___ of ___

DOB JOB:

3/22/2021 7:28:54 PM

© MARVEL ARCHITECTS, PLLC 2018

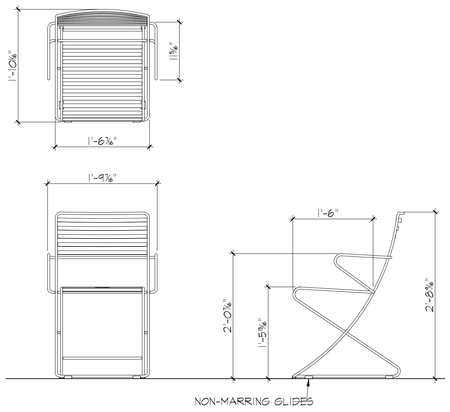

MOVEABLE CHAIRS
MODEL: PARC CENTRE
FIN: STEEL
MANUFACTURE:
Landscape Forms, Inc.
431 Lawndale Ave. Kalamazoo, MI 49048
269.381.3455 fax 800.521.2546 phone
www.landscapeforms.com

NOTE:
1. CHAIRS TO BE TETHERED TO TABLE

1 MOVEABLE CHAIRS

SCALE: 1"=1'-0"

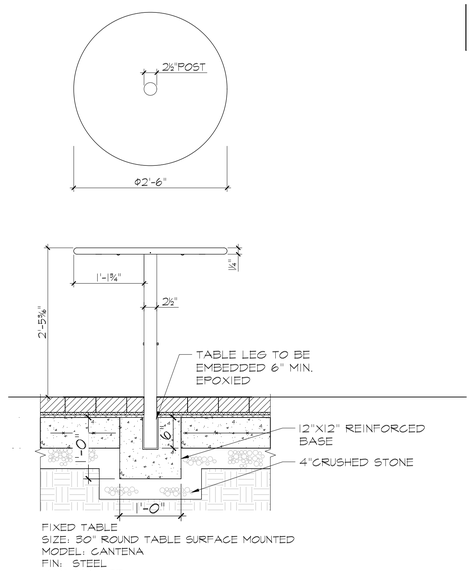

FIXED TABLE
SIZE: 30" ROUND TABLE SURFACE MOUNTED
MODEL: CANTENA
FIN: STEEL
MANUFACTURE:
Landscape Forms, Inc.
431 Lawndale Ave. Kalamazoo, MI 49048
269.381.3455 fax 800.521.2546 phone
www.landscapeforms.com

2 FIXED TABLES

SCALE: 1"=1'-0"

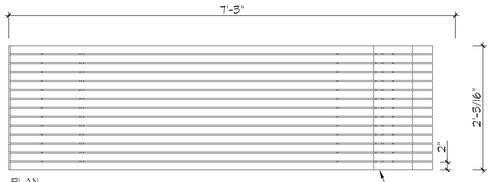

PLAN

NOTE:
1. POWDERCOAT FINISH ON T-BRACKETS COLOR SILVER
2. ALL FASTENERS SHALL BE STAINLESS STEEL
3. WOOD SPECIES FSC CERTIFIED IPE, FINISH NATURAL

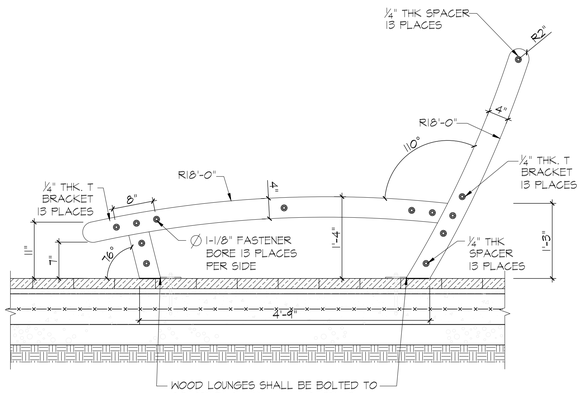

SECTION

3 CHAISE LOUNGE

SCALE: 1"=1'-0"

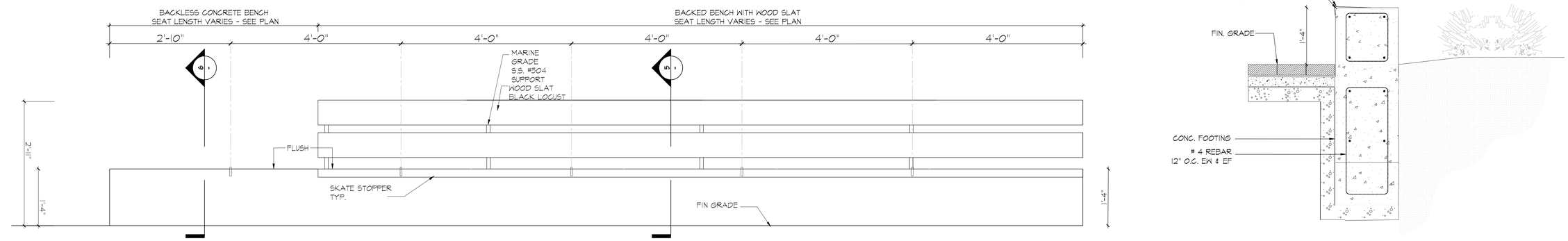

4 BENCH ELEVATION

SCALE: 1"=1'-0"

5 BACKLESS BENCH SECTION

SCALE: 1"=1'-0"

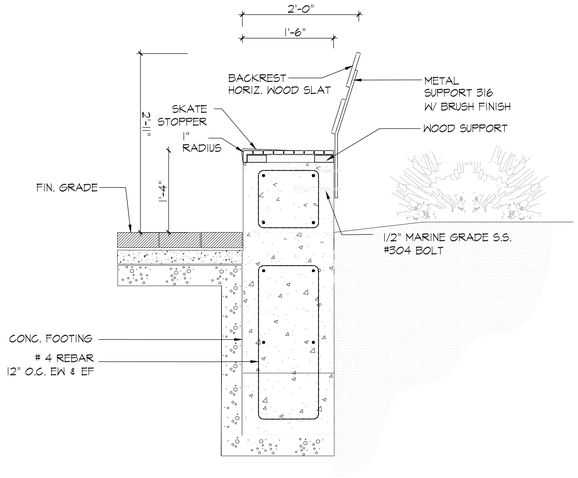

6 BACKED BENCH SECTION

SCALE: 1"=1'-0"

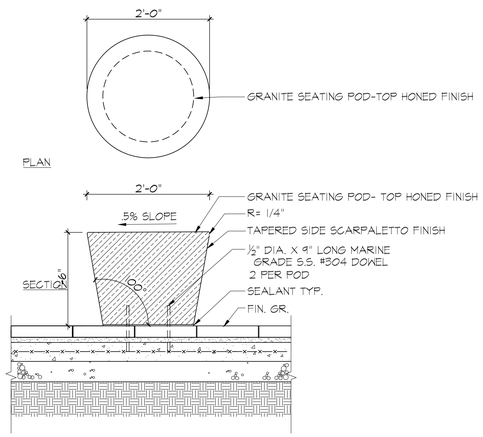

7 SEATING POD

SCALE: 1"=1'-0"

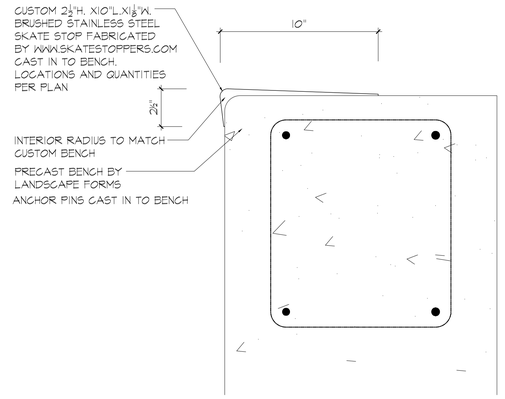

8 SKATE STOPPER DETAIL

SCALE: 3"=1'-0"



OWNER
KENT MEMBER LLC
505 FLUSHING AVE, BROOKLYN, NY 11205

CIVIL / PARKING ENGINEER
PHILIB HABIB AND ASSOCIATES
102 MADISON AVE # 11, NEW YORK, NY 10016

LANDSCAPE ARCHITECT
MPFP
120 BROADWAY 20TH FL, NEW YORK, NY 10271

LIGHTING DESIGNER
ONE LUX STUDIO
158 WEST 29TH STREET, FL 10, NEW YORK, NY 10001

LAND USE CONSULTANT
HERRICK FEINSTEIN LLP
TWO PARK AVENUE, NEW YORK, NY 10016

REV	DATE	DESCRIPTION
	3/24/2021	ULURP SUBMISSION
	11/03/2021	ULURP SUBMISSION
	06/22/2022	ULURP SUBMISSION
	09/08/2022	ULURP SUBMISSION
	01/11/2023	DPR REVIEW
	03/22/2023	ULURP SUBMISSION

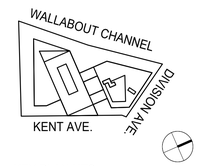

KEY PLAN:NTS

500 KENT

500 KENT AVENUE
BROOKLYN, NY 11249
ID #2019K0330

SEATING DETAILS

SCALE:

DRAWING #:
L-603.00
___ of ___
DOB JOB:

3/22/2021 7:28:54 PM

© MARVEL ARCHITECTS, PLLC 2018