

1 SITE VIEW
SCALE: NTS

LIST OF DRAWINGS

LANDSCAPE ARCHITECTURE DWGS

L-000.00 COVER SHEET
L-000.01 SURVEY
L-001.00 WPAA/ZONING LOT SITE PLAN

Z-01.00 WATERFRONT PUBLIC ACCESS AREA ZONING CALCULATIONS
Z-02.00 WATERFRONT PUBLIC ACCESS AREA ZONING CALCULATIONS
Z-03.00 WATERFRONT PUBLIC ACCESS AREA ZONING CALCULATIONS
Z-04.00 WATERFRONT PUBLIC ACCESS AREA ZONING CALCULATIONS
Z-05.00 WATERFRONT PUBLIC ACCESS AREA ZONING CALCULATIONS
Z-06.00 WATERFRONT PUBLIC ACCESS AREA ZONING CALCULATIONS
Z-07.00 WATERFRONT PUBLIC ACCESS AREA ZONING CALCULATIONS

PLANS

L- 100.00 KEY & DIMENSION PLAN

L- 200.00 GRADING PLAN

L- 300.00 PLANTING PLAN
L- 301.00 PLANT PRECEDENT IMAGES

L- 400.00 MATERIALS PLAN

L- 401.00 FURNITURE PLAN
L- 402.00 FURNITURE PLAN

L- 403.00 LIGHTING PLAN/PHOTOMETRIC PLAN

SECTIONS

L-500.00 SECTIONS
L-501.00 SECTIONS
L-502.00 SECTIONS

DETAILS

L-600.00 DETAILS

L-601.00 PLANTING DETAILS

L-602.00 SITE DETAILS

L-603.00 SEATING DETAILS

SYMBOLS

SECTION — SECTION DRAWING LABEL / SHEET PREFERENCE
ELEVATION PREFERENCE — SECTION DRAWING LIMIT / SHEET PREFERENCE
DETAIL DRAWING LABEL / SHEET REFERENCE
AD- AREA DRAIN
PD- PLANTER DRAIN / LD- LAWN DRAIN
WORK POINT OR ELEVATION REFERENCE
REVISION SYMBOL

MATERIAL

GRANITE OR STONE
CONCRETE
PRE-CAST CONCRETE
FACE BRICK
AGGREGATE STONE OR GRANITE
INSULATION
COMPACTED SUBGRADE
STRUCTURAL STEEL
DRAINAGE BOARD

ABBREVIATIONS

℄	CENTERLINE
∅	DIAMETER
P or DIM	PROPERTY LINE
@	AT
W/	WITH
W/O	WITHOUT
AD	AREA DRAIN
ARCHL	ARCHITECTURAL
BC	BOTTOM OF CURB
BLDG	BUILDING
BW	BOTTOM OF WALL
CB	CATCH BASIN
CIP	CAST IN PLACE
CMU	CONCRETE MASONRY UNIT
CONC	CONCRETE
CONT	CONTINOUS
CP	CENTER POINT
DIA	DIAMETER
DWG	DRAWING
EA	EACH
EJ or EXP JT	EXPANSION JOINT
EL	ELEVATION
ELEC	ELECTRICAL
EQ	EQUAL
EQUIP	EQUIPMENT
EXIST	EXISTING
EW	EACH WAY
FG	FINISH GRADE
FFEL	FINISH FLOOR ELEVATION
GR	GRADE
HT	HEIGHT
HP	HIGH POINT
IN	INCH
JT	JOINT
LD	LAWN DRAIN
LP	LOW POINT
LW	LIGHT WEIGHT
MAX	MAXIMUM
MECH	MECHANICAL
MFR	MANUFACTURER
MIN	MINIMUM
MISC	MISCELLANEOUS
NIC	NOT IN CONTRACT
NTS	NOT TO SCALE
OC	ON CENTER
OD	OUTSIDE DIAMETER
PAVT	PAVEMENT
PD	PLANTER DRAIN
R	RADIUS
REF	REFERENCE
REINF	REINFORCED
SS	STAINLESS STEEL
TC	TOP OF CURB
TW	TOP OF WALL



OWNER
KENT MEMBER LLC
505 FLUSHING AVE, BROOKLYN, NY 11205

CIVIL / PARKING ENGINEER
PHILIB HABIB AND ASSOCIATES
102 MADISON AVE # 11, NEW YORK, NY 10016

LANDSCAPE ARCHITECT
MPFP
120 BROADWAY 20TH FL, NEW YORK, NY 10271

LIGHTING DESIGNER
ONE LUX STUDIO
158 WEST 29TH STREET, FL 10, NEW YORK, NY 10001

LAND USE CONSULTANT
HERRICK FEINSTEIN LLP
TWO PARK AVENUE, NEW YORK, NY 10016

REV	DATE	DESCRIPTION
	3/24/2021	ULURP SUBMISSION
	11/03/2021	ULURP SUBMISSION
	06/22/2022	ULURP SUBMISSION
	09/08/2022	ULURP SUBMISSION
	01/11/2023	DPR REVIEW
	03/22/2023	ULURP SUBMISSION
	07/14/2023	ULURP SUBMISSION
	10/2/2023	ULURP SUBMISSION
	10/20/23	ULURP SUBMISSION

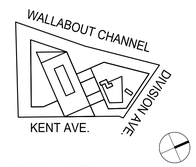

KEY PLAN:NTS

500 KENT

500 KENT AVENUE
BROOKLYN, NY 11249
ID #2019K0330

COVER SHEET

SCALE:

DRAWING #:

L-000.00

LEGEND

GAS VALVE | PARKING METER | TRAFFIC SIGN | HYDRANT H.B. | TREE PIT | LIGHT POST | CATCH BASIN | UTILITY POLE | PHONE TEL. | WATER VALVE | S.W.T. WATER | TEL. MANHOLE | SEWER MANHOLE | ELECTRIC MANHOLE

CL CLEAR | L.A. LOW AREA | W.W. WINDOW WELL | C.D. CELLAR DOOR | R.C. RISED CONCRETE | S.G.H. SAFETY GATE & HOUSING | F.E. FIRE ESCAPE | ENT./UND. ENTRANCE UNDER | A. AREAWAY | RT. RIGHT | CL. CENTERLINE | TC. TOP OF CURB | BC. BOTTOM OF CURB | LG. LEGAL GRADE | PI. POINT OF INTERSECTION | TW. TOP OF WALL | BW. BOTTOM OF WALL | F.F. FIRST FLOOR | B.F. BASEMENT FLOOR | L.F. LOWER FLOOR | EL. SPOT ELEVATION | EP. EDGE OF PAVE

PROPOSED DEVELOPMENT
JOB # 2023K10495570

WALLABOUT CHANNEL WATER

WALLABOUT CHANNEL WATER

APPROXIMATE U.S. PIER & BULKHEAD LINE

248.98' (REC) 254.61' (FINAL SECTION)

276.67' (FIELD) 272.99' (CALC.)

WOOD WALL

IRREG. CONC. WALL
CHAIN LINK FENCE

CONC.

METAL COVER

RAISED CONC.

MONITORING WELL EL=7.20

V A C A N T L O T

V A C A N T L O T

TWIN CONC. WALL

CHAIN LINK FENCE

CONC. SIDEWALK

ASPHALT

GATE

69'-47½" (FIELD MEASURED)

12" CONC. WALL

227.00' (RECORD) 227.01' (FIELD MEASURED)

8" SEWER LINE

130' X 99' COMBINED SEWER LINE

77' INTERCEPTING SEWER LINE

342.17'

29.39'

N 69°-47½" E 109.00' (RECORD)

S 69°-47½" W 109.00' (RECORD)

S 20°-12½" W 100.00' (RECORD)

N 20°-12½" E 100.00' (RECORD)

FROM SOUTHERLY TO WESTERLY SIDE OF KENT AVENUE 103.52' TO RUSH STREET EXTENDED

POINT OF BEGINNING

KENT AVENUE

ONE WAY TRAFFIC (60' WIDE) (IRREG. ASPHALT ROADWAY)

DIVISION AVENUE

ONE WAY TRAFFIC (70' WIDE) (34± ASPHALT ROADWAY)

STATE OF NEW YORK — LICENSED LAND SURVEYOR

AAA GROUP
LAND SURVEYORS SERVICES
139 LORIMER STREET
BROOKLYN, N.Y. 11206
TEL. (718) 387-9800 , FAX 384-5050

ARCHITECTURAL SURVEY

CAUTION: BEFORE PERFORMING ANY DIGGING OR DRILLING ON THIS SITE, IT IS REQUIRED THAT SUBSURFACE SERVICES, INCLUDING THE UNDERGROUND MAINS BE MARKED AND IDENTIFIED BY THE UTILITY INVOLVED IN COMPLIANCE WITH INDUSTRIAL CODE 53 OF NEW YORK STATE.

1) ALL ELEVATIONS REFER TO NORTH AMERICAN VERTICAL DATUM OF 1988 (NAVD88).

2) LEGAL ORDICE (NAVD88) REFER TO CENTER OF RIGHT OF WAY. ALL OTHER DIMENSIONS AND DISTANCES ARE MEASURED. REFER TO CURB LINE TAKEN AT PROJECTION OF PROPERTY.

3) UNDERGROUND UTILITY INFORMATION SHOWN WAS OBTAINED FROM VARIOUS COMPANIES AND CITY SERVICES AND IS NOT GUARANTEED FOR ACCURACY OR COMPLETENESS.

4) THIS IS TO CERTIFY THAT THERE ARE NO APPARENT VIOLATIONS OF ZONING COURSES IN THE PROPERTY AS SHOWN ON THIS SURVEY.

0' 8' 16' 24' 32'

UNAUTHORIZED ALTERATIONS OR ADDITIONS TO THIS SURVEY IS A VIOLATION OF SECTION 7209 OF THE NEW YORK STATE EDUCATION LAW. COPIES OF THIS SURVEY MAP NOT BEARING THE LAND SURVEYOR'S INKED SEAL OR EMBOSSED SEAL SHALL NOT BE CONSIDERED TO BE A VALID TRUE COPY. GUARANTEES OR CERTIFICATIONS INDICATED HEREON SHALL RUN ONLY TO THE PERSON FOR WHOM THE SURVEY IS PREPARED, AND ON HIS BEHALF TO THE TITLE COMPANY, GOVERNMENTAL AGENCY AND LENDING INSTITUTION LISTED HEREON, AND TO THE ASSIGNEES OF THE LENDING INSTITUTION. GUARANTEES OR CERTIFICATION ARE NOT TRANSFERABLE TO ADDITIONAL INSTITUTIONS OR SUBSEQUENT OWNERS.

SURVEYED :	FEBRUARY 01, 2019
UPDATED :	
UPDATED :	
SCALE:	1"=15'
BLOCK:	2023
LOT(s):	10
SECTION:	7
COUNTY:	KINGS
DWG BY:	AAA-Mr.L

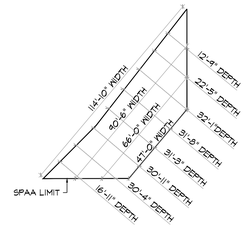

SPAA WEIGHTED AREA CALCULATIONS	
TOTAL AREA	2,584 SF
AVERAGE WIDTH	79'-6"
AVERAGE DEPTH	26'-0"
AVERAGE WIDTH TO DEPTH RATIO	3:1

ZONING SUMMARY

GENERAL INFORMATION	
BLOCK/ LOT(S):	10/2023
ZONING MAP:	12d
ZONING DISTRICT:	M1-5
COMMUNITY DISTRICT:	BROOKLYN COMMUNITY DISTRICT 2
ZONING LOT AREA:	**115,244 SF (ALL UPLAND) 2.64 ACRES**
LOT AREA:	**115,244 SF**
TOTAL REQUIRED WPAA AREA (20%) OF 115,244 SF):	**23,049 SF**
SPW:	**20,466 SF**
UPLAND CONNECTION:	**0 SF TOTAL**
WPAA (ONLY WITH SPW):	**20,466 SF < 23,049 SF**
SUPPLEMENTAL PAA:	**2,584 SF**
TOTAL WPAA (SPW + SPAA):	**23,050 SF**
TOTAL PROVIDED PUBLIC ACCESS AREAS	
PAA1:	**12,350 SF**
PAA2/VISUAL CORRIDOR:	**14,053 SF**
TOTAL PAA:	**26,403 SF**

SITE PLAN LEGEND

- OFFICE ACCESS POINT
- COMMERCIAL ACCESS
- LOADING DOCK UG 6B
- PARKING INGRESS/EGRESS (BUILDING ENTRANCE POINTS SHOWN FOR ILLUSTRATIVE PURPOSES ONLY)
- M1-5/R7X ZONING DISTRICT
- # STORIES
- # STORIES W/ BASEMENT
- # STORIES W/ STORE
- 65' BUILDING HEIGHT
- ROAD DIRECTION
- ZONING LOT LINE
- ZONING DISTRICT BOUNDARY
- ILLUSTRATIVE BUILDING LINE
- PROPOSED MAXIMUM BUILDING BUILDING ENVELOPE
- TOTAL SPW & SPAA (WPAA)
- VISUAL CORRIDOR
- PAA 1
- PAA 2
- SHORE PUBLIC WALKWAY (SPW)
- SUPPLEMENTAL PUBLIC ACCESS AREA (SPAA)
- U.S. PIER & BULKHEAD LINES
- EXISTING LIGHTING POLE
- PROPOSED LIGHTING POLE
- FIRE HYDRANT
- EXISTING TREE
- PROPOSED CANOPY TREE
- PROPOSED ORNAMENTAL TREE
- EXISTING MANHOLE
- EXISTING SIGN
- EXISTING EMERGENCY PHONE
- EXISTING STREET VENT GRILLE
- EXISTING CATCH BASIN
- EXISTING BUS STOP
- EXISTING POST
- PROP. MAX. BLDG. ENVELOPE HEIGHT ILLUSTRATIVE BUILDING HEIGHT
- PROPOSED BUILDING FOOTPRINT
- CLEAR CIRCULATION PATH
- ASPAHLT PAVERS (1/L600)
- CONCRETE PAVING (2/L600)
- VEHICULAR ASPHALT (3/L600)
- BIKE RACK (3/L602)
- TRASH RECEPTACLE (5/L602)
- PROPOSED ACCESSIBLE SEATING
- BENCH, TYP. (4/L602)
- BULKHEAD WITH GUARDRAIL (6/L602)
- STAIRS (5/L600)
- CONCRETE WALL (4/L600)
- PUBLIC SPACE SIGN (1/L602)
- PUBLIC SEATING SPACE SIGN (2/L602)
- TABLE AND CHAIRS (12/L603)
- CHAISE LOUNGE (3/L603)



OWNER
KENT MEMBER LLC
505 FLUSHING AVE, BROOKLYN, NY 11205

CIVIL / PARKING ENGINEER
PHILIB HABIB AND ASSOCIATES
102 MADISON AVE # 11, NEW YORK, NY 10016

LANDSCAPE ARCHITECT
MPFP
120 BROADWAY 20TH FL, NEW YORK, NY 10271

LIGHTING DESIGNER
ONE LUX STUDIO
158 WEST 29TH STREET, FL 10, NEW YORK, NY 10001

LAND USE CONSULTANT
HERRICK FEINSTEIN LLP
TWO PARK AVENUE, NEW YORK, NY 10016

REV	DATE	DESCRIPTION
	3/24/2021	ULURP SUBMISSION
	11/03/2021	ULURP SUBMISSION
	06/22/2022	ULURP SUBMISSION
	09/08/2022	ULURP SUBMISSION
	01/11/2023	DPR REVIEW
	03/22/2023	ULURP SUBMISSION
	07/14/2023	ULURP SUBMISSION
	10/2/2023	ULURP SUBMISSION
	10/20/23	ULURP SUBMISSION

625 KENT AVE.
LOT:1
BLOCK 2023

VACANT LAND

HT + 65' - 0" (HT + 63'-11 1/2") 4
HT + 130'-0" (HT + 127'-0") 8
HT + 65' - 0" (HT + 63'-11 1/2") 4
HT + 95'-0" (HT + 80'-11 1/2") 5
HT + 355' - 0" HT + 352' - 0" 23
HT + 130'-0" (HT + 127'-0") 8
HT + 65'-0" (HT + 63'-11 1/2") 4

TOP OF SCREENED MECHANICAL BULKHEAD

BULKHEAD HT + 395'

SUPPLEMENTAL PUBLIC ACCESS AREA

TRUCK MANUEVERING AREA FOR LOADING

50'-0" VISUAL CORRIDOR

10'-0" VC/PAA 2 CLEAR PATH TYP.

10'-0" PAA 1 CLEAR PATH TYP.

6'-0" SPAA CLEAR PATH TYP.

40'-0" SPW CLEAR PATH MIN. TYP.

12'-0" SPW CLEAR PATH

SPW 40'-0" WIDE STREET

DIVISION AVENUE (70' - NARROW ST.)

KENT AVENUE
KENT AVENUE (90' -WIDE ST.)

M2-1 M1-5 R7X

M1-5 R7X

R7-3/C2-4 DISTRICT

R6 DISTRICT

WALLABOUT CHANNEL
DIVISION AVE.
KENT AVE.

KEY PLAN:NTS

500 KENT

500 KENT AVENUE
BROOKLYN, NY 11249
ID #2019K0330

WPAA/ ZONING LOT SITE PLAN

SCALE: 1/16" = 1'-0"

DRAWING #:
L-001.00

ZONING SECTION	ITEM	ZONING RESOLUTION REQUIREMENT	PROVIDED	COMPLIANCE	DWG REF
62-33	**SPECIAL YARD REGULATIONS ON WATERFRONT BLOCKS**				
62-331	**FRONT YARDS AND SIDE YARDS**				
62-331 (a)	**REAR LOT LINE**	FRONT YARDS AND SIDE YARDS SHALL BE PROVIDED ON ZONING LOTS WITHIN WATERFRONT BLOCKS IN ACCORDANCE WITH APPLICABLE DISTRICT REGULATIONS, EXCEPT THAT: **(A)** ANY REAR LOT LINE OF A WATERFRONT ZONING LOT THAT INTERSECTS THE SHORELINE SHALL BE DEEMED TO BE A SIDE LOT LINE AND BE SUBJECT TO SIDE YARD REGULATIONS; AND	N/A	N/A	N/A
62-331 (b)	**SIDE LOT LINE**	**(B)** SIDE YARD REGULATIONS SHALL BE INAPPLICABLE ALONG SIDE LOT LINES THAT ARE COINCIDENT WITH OR SEAWARD OF THE SHORELINE. IN LIEU THEREOF, A WATERFRONT YARD SHALL BE PROVIDED IN ACCORDANCE WITH THE PROVISIONS OF SECTION 62-332.	N/A	N/A	N/A
62-332	**REAR YARDS AND WATERFRONT YARDS**				
62-332 (a)	**DEPTH OF THE WATERFRONT YARD**	REAR YARD REGULATIONS SHALL BE INAPPLICABLE ON WATERFRONT ZONING LOTS. IN LIEU THEREOF, A WATERFRONT YARD SHALL BE PROVIDED ALONG THE ENTIRE LENGTH OF THE SHORELINE, BULKHEAD OR STABILIZED NATURAL SHORE, WHICHEVER IS FURTHEST LANDWARD. IN ADDITION, THE FOLLOWING RULES SHALL APPLY TO THE WATERFRONT YARD: **(A)** WHERE A PLATFORM PROJECTS FROM THE SHORELINE, STABILIZED NATURAL SHORE, OR BULKHEAD (SEE ILLUSTRATION BELOW OF WATERFRONT YARD), SUCH WATERFRONT YARD SHALL, IN LIEU OF FOLLOWING THE SHORE AT THAT PORTION, CONTINUE ALONG THE WATER EDGE OF SUCH PLATFORM UNTIL IT AGAIN INTERSECTS THE SHORELINE, STABILIZED NATURAL SHORE, OR BULKHEAD, AT WHICH POINT IT SHALL RESUME FOLLOWING THE SHORELINE, STABILIZED NATURAL SHORE, OR BULKHEAD.	WATERFRONT YARD WITH A MINIMUM DEPTH OF 40 FEET PER COLUMN B OF THE WATERFRONT YARD DEPTH TABLE IN 62-332(A) IS PROVIDED N/A	COMPLIES N/A	L-100.00 N/A
62-332(a)(1)	**MINIMUM DEPTH REDUCTION FOR NARROW SHORELINE AND LOT PORTIONS**	**(A)(1)** ALONG THOSE PORTIONS OF THE LANDWARD EDGE OF STABILIZED SHORE, BULKHEAD, NATURAL SHORELINE OR ALONG THOSE PORTIONS OF THE WATER EDGE OF A PLATFORM, HAVING A LOT DIMENSION, MEASURED PERPENDICULAR TO AND LANDWARD FROM SUCH EDGE, THAT IS LESS THAN 70 FEET IN THE CASE OF DISTRICTS IN COLUMN A OR 80 FEET IN THE CASE OF DISTRICTS IN COLUMN B. FOR SUCH SHALLOW PORTIONS OF LOTS, THE MINIMUM DEPTH MAY BE REDUCED BY ONE FOOT FOR EACH FOOT THAT THE LOT DIMENSION MEASURED FROM SUCH EDGE IS LESS THAN 70 OR 80 FEET, AS APPLICABLE.	N/A	N/A	N/A
62-332(a)(2)	**MINIMUM DEPTH REDUCTION FOR NARROW WATER EDGE PLATFORMS**	**(A)(2)** ALONG THOSE PORTIONS OF THE WATER EDGE OF A PLATFORM HAVING A DIMENSION, MEASURED PERPENDICULAR FROM SUCH WATER EDGE TO AN OPPOSITE WATER EDGE THAT IS LESS THAN 100 FEET IN THE CASE OF DISTRICTS IN COLUMN A OR 120 FEET IN THE CASE OF DISTRICTS IN COLUMN B. FOR SUCH NARROW PORTIONS OF PLATFORMS, THE MINIMUM DEPTH ALONG EACH OPPOSITE EDGE MAY BE REDUCED BY ONE-HALF FOOT FOR EACH FOOT THAT THE PLATFORM DIMENSION IS LESS THAN 100 OR 120 FEET, AS APPLICABLE.	N/A	N/A	N/A
62-332(a)(3)	**DEPTH REDUCTION IN WATERFRONT YARDS FOR TIDAL WETLAND AREAS**	**(A)(3)** WHERE A TIDAL WETLAND AREA IS PROVIDED, THE DEPTH OF THE WATERFRONT YARD MAY BE REDUCED BY A FOOT FOR EVERY FOOT OF STABILIZED NATURAL SHORE OR INTERTIDAL PLANTING AREA BEYOND THE LANDWARD EDGE OF THE BULKHEAD, STABILIZED NATURAL SHORE OR SHORELINE UP TO SEVEN FEET. SUCH REDUCTION IN DEPTH SHALL NOT EXTEND ALONG MORE THAN 30 PERCENT OF THE SHORELINE OF THE WATERFRONT ZONING LOT.	N/A	N/A	N/A
62-332(b)	**THE LEVEL OF THE WATERFRONT YARD**	**(B)** THE LEVEL OF REQUIRED WATERFRONT YARDS SHALL NOT BE HIGHER THAN THE ELEVATION OF THE TOP OF THE ADJOINING EXISTING BULKHEAD, EXISTING STABILIZED NATURAL SHORE OR MEAN HIGH WATER LINE, AS APPLICABLE, EXCEPT THAT NATURAL GRADE LEVEL NEED NOT BE DISTURBED IN ORDER TO COMPLY WITH THIS REQUIREMENT. THE LEVEL OF THE PORTION OF A WATERFRONT YARD ON A PLATFORM SHALL NOT BE MORE THAN THREE FEET HIGHER THAN THE ABUTTING LEVEL OF THE NON-PLATFORMED PORTION OF THE WATERFRONT YARD, OF WHICH IT IS THE CONTINUATION, EXCEPT THAT THE LEVEL OF A PLATFORM EXISTING ON OCTOBER 25, 1993 NEED NOT BE ALTERED IN ORDER TO COMPLY WITH THIS REQUIREMENT.	WATERFRONT YARD ELEVATION IS NOT HIGHER THAN THE ELEVATION OF THE TOP OF THE ADJOINING BUILKHEAD	COMPLIES	L-200.00
62-332(b)(1)(I)	**WATERFRONT YARD LEVEL OPTIONS FOR EXEMPT ZONING LOTS**	**(B)(1)(I)** FOR ZONING LOTS NOT REQUIRED TO PROVIDE WATERFRONT PUBLIC ACCESS AREAS PURSUANT TO SECTION 62-52, THE LEVEL OF WATERFRONT YARDS MAY BE RAISED EITHER TO: THE FLOOD-RESISTANT CONSTRUCTION ELEVATION OR SIX FEET ABOVE SHORELINE, WHICHEVER IS HIGHER; OR	N/A	N/A	N/A
62-332(b)(1)(II)	**WATERFRONT YARD LEVEL OPTIONS FOR EXEMPT ZONING LOTS**	**(B)(1)(II)** FOR ZONING LOTS NOT REQUIRED TO PROVIDE WATERFRONT PUBLIC ACCESS AREAS PURSUANT TO SECTION 62-52, THE LEVEL OF WATERFRONT YARDS MAY BE RAISED EITHER TO: A HIGHER ELEVATION, PROVIDED THAT THE WATERFRONT YARD COMPLIES WITH THE APPLICABLE PROVISIONS OF PARAGRAPH (B)(2) OF THIS SECTION, DEPENDING ON THE CONDITION OF THE SHARED LOT LINE.	N/A	N/A	N/A
62-332(b)(2)(I)	**WATERFRONT YARD ELEVATION REGULATIONS FOR PUBLIC ACCESS AREAS**	**(B)(2)(I)** FOR ZONING LOTS WITH REQUIRED WATERFRONT PUBLIC ACCESS AREAS PURSUANT TO SECTION 62-52, THE LEVEL OF WATERFRONT YARDS MAY BE RAISED TO A HIGHER ELEVATION, PROVIDED THAT SUCH ELEVATED WATERFRONT YARD COMPLIES WITH THE FOLLOWING PROVISIONS, DEPENDING ON THE CONDITION OF THE ADJACENT ZONING LOT: WHERE A WATERFRONT YARD ADJOINS A *STREET*, PUBLIC PARK, OR WATERFRONT PUBLIC ACCESS AREA ON AN ADJACENT ZONING LOT, THE LEVEL OF THE WATERFRONT YARD WITHIN 15 FEET OF THE SHARED LOT LINE SHALL NOT EXCEED THREE FEET ABOVE THE LEVEL OF THE ADJOINING STREET, PUBLIC PARK OR WATERFRONT PUBLIC ACCESS AREA, AND THE WIDTH OF THE CIRCULATION PATH AT THE LOT LINE IS GREATER THAN THAT REQUIRED BY PARAGRAPH (A) OF SECTION 62-62 (DESIGN REQUIREMENTS FOR SHORE PUBLIC WALKWAYS AND SUPPLEMENTAL PUBLIC ACCESS AREAS). HOWEVER, THE ELEVATION OF THE REQUIRED CIRCULATION PATH SHALL BE NO HIGHER THAN THE GRADE OF THE ADJACENT STREET, PUBLIC PARK, OR ZONING LOT AT THE LOT LINE.	WATERFRONT YARD DOES NOT EXCEED 3'-0" ABOVE ADJOINING STREET OR ADJACENT ZONING LOT. THE REQUIRED CIRCULATION PATH MEETS FLUSH WITH THE ADJACENT STREET.	COMPLIES	L-200.00
62-332(b)(2)(II)	**WATERFRONT YARD ELEVATION REGULATIONS FOR PUBLIC ACCESS AREAS**	**(B)(2)(II)** FOR ZONING LOTS WITH REQUIRED WATERFRONT PUBLIC ACCESS AREAS PURSUANT TO SECTION 62-52, THE LEVEL OF WATERFRONT YARDS MAY BE RAISED TO A HIGHER ELEVATION, PROVIDED THAT SUCH ELEVATED WATERFRONT YARD COMPLIES WITH THE FOLLOWING PROVISIONS, DEPENDING ON THE CONDITION OF THE ADJACENT ZONING LOT: WHERE A WATERFRONT YARD DOES NOT ADJOIN A STREET, PUBLIC PARK, OR WATERFRONT PUBLIC ACCESS AREA ON AN ADJACENT ZONING LOT, THE LEVEL OF THE WATERFRONT YARD AT THE SHARED *LOT LINE*, MAY EXCEED THE LEVEL OF THE ADJACENT ZONING LOT:	N/A	N/A	N/A
62-332(b)(2)(II)(a)	**WATERFRONT YARD ELEVATION REGULATIONS FOR PUBLIC ACCESS AREAS**	**(B)(2)(II)(A)** UP TO A MAXIMUM OF SIX FEET ABOVE THE SHORELINE;	N/A	N/A	N/A
62-332(c)	**PERMITTED OBSTRUCTIONS**	**(C)** NO BUILDING OR OTHER STRUCTURE SHALL BE ERECTED ABOVE THE LOWEST LEVEL OF A WATERFRONT YARD. PERMITTED OBSTRUCTIONS IN WATERFRONT YARDS IN ALL DISTRICTS SHALL INCLUDE PERMITTED OBSTRUCTIONS AS LISTED IN SECTIONS 23-44 AND 62-611, EXCEPT THAT ENCLOSED ACCESSORY OFF-STREET PARKING SPACES AND WALLS EXCEEDING FOUR FEET IN HEIGHT SHALL NOT BE PERMITTED. WHERE ANY POWER SYSTEMS, INCLUDING, BUT NOT LIMITED TO, GENERATORS, SOLAR ENERGY SYSTEMS, FUEL CELLS, BATTERIES AND OTHER ENERGY STORAGE SYSTEMS, ARE LOCATED IN A FRONT YARD, THE ENTIRE WIDTH OF THE PORTION OF SUCH EQUIPMENT FACING A STREET, WHETHER OPEN OR ENCLOSED, SHALL BE FULLY SCREENED BY VEGETATION.	ONLY PERMITTED OBSTRUCTIONS INCLUDING TREES, PLANT MATERIAL AND THEIR RETAINING WALLS, SEATING, LITTER RECEPTACLES, AND OTHER OUTDOOR FURNITURE, GUARDRAILS AND LIGHTPOLES, BICYCLE RACKS SHALL BE LOCATED WITHIN THE WATERFRONT YARD	COMPLIES	L-200.00
62-51	APPLICABILITY OF VISUAL CORRIDOR REQUIREMENTS				
62-51 (a)	**APPLICABILITY OF VISUAL CORRIDOR REQUIREMENTS**	VISUAL CORRIDORS SHALL BE PROVIDED FOR ZONING LOTS DEVELOPED WITHIN WATERFRONT BLOCKS IN ACCORDANCE WITH THE PROVISIONS OF THIS SECTION. IN THE EVENT THE VISUAL CORRIDOR REQUIREMENT IMPOSED ON THE ZONING LOT EXCEEDS 50 PERCENT OF THE *LOT WIDTH* OR THERE IS NO WAY TO PROVIDE A VISUAL CORRIDOR IN COMPLIANCE WITH SECTION 62-511, NO VISUAL CORRIDORS SHALL BE REQUIRED.	50'-0" VISUAL CORRIDOR PROVIDED	COMPLIES	L-001.00
62-511	LOCATION OF VISUAL CORRIDORS				
62-511 (a)	**VISUAL CORRIDOR EXTENSION ALONG STREET LINES**	**(A)** THE STREET LINES OF A STREET SHOWN ON THE CITY MAP WHICH EXTEND SEAWARD OF THE FIRST UPLAND STREET BOUNDING A WATERFRONT BLOCK AND TERMINATE AT A WATERFRONT BLOCK SHALL BE PROLONGED AS A VISUAL CORRIDOR THROUGH ALL INTERVENING ZONING LOTS TO THE WATER IF THE PROLONGED STREET WOULD INTERSECT THE SHORELINE AT AN ANGLE OF 45 DEGREES OR MORE AND THERE ARE NO EXISTING OBSTRUCTIONS BLOCKING 50 PERCENT OR MORE OF THE WIDTH OF THE VISUAL CORRIDOR THAT WOULD RESULT;	DIVISION AVENUE EXTENDS TO THE WATER AND INTERSECTS THE SHORELINE AT AN ANGLE OF 53 DEGREES	COMPLIES	L-100.00
62-511 (b)	**VISUAL CORRIDOR MAINTENANCE**	**(B)** A VISUAL CORRIDOR DESIGNATED IN A WATERFRONT ACCESS PLAN THAT TRAVERSES THE ZONING LOT SHALL BE MAINTAINED THROUGH THE ZONING LOT IN ACCORDANCE WITH THE PROVISIONS OF SUCH PLAN; AND	N/A	N/A	N/A
62-511 (c)	**VISUAL CORRIDOR CLASSIFICATION**	**(C)** THE STREET LINES OF A STREET SHOWN ON THE CITY MAP WHICH TERMINATE AT THE FIRST UPLAND STREET BOUNDING A WATERFRONT BLOCK, AND WHICH STREET WOULD, IF PROLONGED, TRAVERSE THE ZONING LOT AND INTERSECT THE SHORELINE AT AN ANGLE OF 45 DEGREES OR MORE WITHOUT TRAVERSING AN INTERVENING ZONING LOT, SHALL BE PROLONGED AS A VISUAL CORRIDOR IF THERE ARE NO EXISTING OBSTRUCTIONS BLOCKING 50 PERCENT OR MORE OF THE WIDTH OF THE VISUAL CORRIDOR THAT WOULD RESULT.	N/A	N/A	
62-511 (c)(1)	**VISUAL CORRIDOR CLASSIFICATION**	**(C)(1)** THERE IS AN EXISTING MAPPED STREET EXTENDING TO THE WATER THAT INTERSECTS THE SHORELINE AT AN ANGLE OF 45 DEGREES OR MORE;	N/A	N/A	N/A
62-511 (c)(2)	**VISUAL CORRIDOR CLASSIFICATION**	**(C)(2)** THERE IS A REQUIRED VISUAL CORRIDOR PURSUANT TO PARAGRAPH (A) OF THIS SECTION;	N/A	N/A	N/A
62-511 (c)(3)	**VISUAL CORRIDOR CLASSIFICATION**	**(C)(3)** THERE IS AN EXISTING DESIGNATED VISUAL CORRIDOR EITHER PREVIOUSLY RECORDED BY ANOTHER PROPERTY OWNER OR MANDATED IN A WATERFRONT ACCESS PLAN; OR	N/A	N/A	
62-511 (c)(4)	**VISUAL CORRIDOR CLASSIFICATION**	**(C)(4)** THE PROPERTY OWNER IS CURRENTLY DESIGNATING ANOTHER VISUAL CORRIDOR THROUGH THE ZONING LOT PURSUANT TO PARAGRAPH (C) OF THIS SECTION WHICH IS EQUAL TO OR GREATER IN WIDTH THAN THE VISUAL CORRIDOR THAT WOULD BE ELIMINATED. IN THE EVENT THE METHODOLOGY OF THIS SECTION RESULTS IN A CONDITION WHEREBY VISUAL CORRIDORS THROUGH THE ZONING LOT OR TO EITHER SIDE OF THE ZONING LOT ARE MORE THAN 600 FEET APART, AS MEASURED ALONG THE STREET LINE OF THE FIRST UPLAND STREET BOUNDING THE WATERFRONT BLOCK, ADDITIONAL VISUAL CORRIDORS SHALL BE PROVIDED AT LOCATIONS THAT WOULD MAINTAIN A MAXIMUM SPACING OF 600 FEET WITHOUT TRAVERSING AN INTERVENING ZONING LOT. SUCH SPACING MAY BE INCREASED ONLY WHERE AN INTERVENING ZONING LOT OR AN EXISTING BUILDING OR OTHER STRUCTURE ON THE ZONING LOT PREVENTS COMPLIANCE AND ONLY TO THE MINIMUM DIMENSION NECESSARY TO CLEAR THE INTERVENING ZONING LOT OR EXISTING BUILDING OR OTHER STRUCTURE. HOWEVER, NO VISUAL CORRIDOR SHALL BE REQUIRED WHERE SUCH INCREASED SPACING WOULD PLACE IT WITHIN 200 FEET OF ANOTHER VISUAL CORRIDOR. IN ORDER TO DETERMINE THE LOCATION OF THE NEAREST VISUAL CORRIDORS, THE METHODOLOGY OF PARAGRAPHS (A),(B), AND (C) OF THIS SECTION SHALL BE APPLIED TO THE ADJOINING PORTIONS OF THE BLOCK FRONTAGE TO EITHER SIDE OF THE ZONING LOT. AS MEASURED ALONG THE STREET LINE OF THE FIRST UPLAND STREET BOUNDING THE WATERFRONT BLOCK, THERE ARE NO VISUAL CORRIDORS WITHIN 600 FEET. THEREFORE, A VISUAL CORRIDOR IS REQUIRED WITHIN THE ZONING LOT.	**5**0'-0" VISUAL CORRIDOR PROVIDED	COMPLIES	L-001.00



OWNER
KENT MEMBER LLC
505 FLUSHING AVE, BROOKLYN, NY 11205

CIVIL / PARKING ENGINEER
PHILIB HABIB AND ASSOCIATES
102 MADISON AVE # 11, NEW YORK, NY 10016

LANDSCAPE ARCHITECT
MPFP
120 BROADWAY 20TH FL, NEW YORK, NY 10271

LIGHTING DESIGNER
ONE LUX STUDIO
158 WEST 29TH STREET, FL 10, NEW YORK, NY 10001

LAND USE CONSULTANT
HERRICK FEINSTEIN LLP
TWO PARK AVENUE. NEW YORK, NY 10016

REV	DATE	DESCRIPTION
	3/24/2021	ULURP SUBMISSION
	11/03/2021	ULURP SUBMISSION
	06/22/2022	ULURP SUBMISSION
	09/08/2022	ULURP SUBMISSION
	01/11/2023	DPR REVIEW
	03/22/2023	ULURP SUBMISSION
	07/14/2023	ULURP SUBMISSION
	10/2/2023	ULURP SUBMISSION
	10/20/23	ULURP SUBMISSION

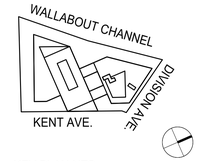

KEY PLAN:NTS

500 KENT

500 KENT AVENUE
BROOKLYN, NY 11249

ID #2019K0330

WATERFRONT PUBLIC ACCESS AREA ZONING CALCULATIONS

SCALE:

DRAWING #:
Z-01.00

ZONING SECTION	ITEM	ZONING RESOLUTION REQUIREMENT	PROVIDED	COMPLIANCE	DWG REF
62-512	**DIMENSIONS OF VISUAL CORRIDORS**				
62-512	**DIMENSIONS OF VISUAL CORRIDORS**	THE WIDTH OF A VISUAL CORRIDOR SHALL BE DETERMINED BY THE WIDTH OF THE STREET OF WHICH IT IS THE PROLONGATION BUT IN NO EVENT LESS THAN 50 FEET. VISUAL CORRIDORS THAT ARE NOT THE PROLONGATIONS OF STREETS SHALL BE AT LEAST 50 FEET WIDE. FOR THE PURPOSES OF ESTABLISHING THE WIDTH, VEHICULAR TURNAROUNDS AT THE TERMINATIONS OF SUCH STREETS, INCLUDING CURVED OR FLANGED TREATMENTS AT INTERSECTIONS, SHALL BE OMITTED. THE LEVEL OF A VISUAL CORRIDOR SHALL BE DETERMINED BY ESTABLISHING A PLANE CONNECTING THE TWO POINTS ALONG THE STREET LINES FROM WHICH THE VISUAL CORRIDOR EMANATES AT AN ELEVATION FIVE FEET ABOVE CURB ELEVATION WITH THE TWO POINTS WHERE THE PROLONGED STREET LINES INTERSECT THE SHORELINE, STABILIZED NATURAL SHORE, BULKHEAD, OR UPLAND EDGE OF A WATERFRONT YARD, OR THE BASE PLANE OF A PIER OR PLATFORM, WHICHEVER INTERSECTION OCCURS FIRST. SUCH PLANE SHALL THEN CONTINUE HORIZONTALLY SEAWARD FROM THE LINE OF INTERSECTION. VISUAL CORRIDORS THAT ARE NOT PROLONGATIONS OF MAPPED STREETS SHALL BE DETERMINED BY ESTABLISHING A PLANE CONNECTING AN ELEVATION FIVE FEET ABOVE CURB ELEVATION AT THE TWO POINTS ALONG THE LOT LINE FROM WHICH THE VISUAL CORRIDOR EMANATES WITH THE TWO POINTS OF INTERSECTION AT THE SHORELINE, STABILIZED NATURAL SHORE, BULKHEAD, UPLAND EDGE OF A WATERFRONT YARD, OR THE BASE PLANE OF A PIER OR PLATFORM, WHICHEVER INTERSECTION OCCURS FIRST. NO OBSTRUCTIONS ARE PERMITTED WITHIN A VISUAL CORRIDOR, EXCEPT AS SET FORTH IN SECTIONS 62-513 AND 62-60, INCLUSIVE, WHEN A VISUAL CORRIDOR COINCIDES WITH AN UPLAND CONNECTION.	50'0" VISUAL CORRIDOR PROVIDED THE PLANE REPRESENTING THE LEVEL OF VISUAL CORRIDOR EXTENDS FROM THE LOT LINE CURB AT 2 POINTS , THE ELEVATIONS OF WHICH ARE 20.28' AND 21.28' TO THE INTERSECTION AT THE BULK HEAD WHICH ARE 14.00' AND 14.50'.	COMPLIES COMPLIES	L-001.00 L-200.00
62-513	**PERMITTED OBSTRUCTIONS IN VISUAL CORRIDORS**				
62-513 (a)	**PERMITTED OBSTRUCTIONS IN VISUAL CORRIDORS**	NO BUILDING OR OTHER STRUCTURE SHALL BE ERECTED WITHIN THE WIDTH OF A VISUAL CORRIDOR ABOVE ITS LOWEST LEVEL, AS ESTABLISHED PURSUANT TO SECTION 62-512 (DIMENSIONS OF VISUAL CORRIDORS), EXCEPT AS PROVIDED IN THIS SECTION. PERMITTED OBSTRUCTIONS WITHIN VISUAL CORRIDORS IN ALL DISTRICTS SHALL INCLUDE: **(A)** PERMITTED OBSTRUCTIONS LISTED IN SECTION 62-611, PROVIDED THAT NO SHADE TREES SHALL BE PLANTED WITHIN 15 FEET OF THE CENTERLINE OF A VISUAL CORRIDOR, EXCEPT WHEN PROVIDED WITHIN AN OPEN PARKING LOT;	NO SHADE TREES WITHIN 15 FEET OF THE CENTERLINE OF THE VISUAL CORRIDOR	COMPLIES	L-001.00
62-513 (b)	**PERMITTED OBSTRUCTIONS IN VISUAL CORRIDORS**	**(B)** PERMITTED OBSTRUCTIONS LISTED IN SECTION 23-44, AS MODIFIED FOR WATERFRONT YARDS IN SECTION 62-332;	ONLY PERMITTED OBSTRUCTIONS PROVIDED WITHIN THE VISUAL CORRIDOR: SEATING, PLANTERS, PLANTERS WITH TREES, PLANTING, LITTER RECEPTACLES, AND LIGHT POLES.	COMPLIES	L-001.00
62-513 (c)	**PERMITTED OBSTRUCTIONS IN VISUAL CORRIDORS**	**(C)** BOATS, SHIPS OR OTHER VESSELS, AND FLOATING STRUCTURES PERMITTED BY PARAGRAPH (A) OF SECTION 62-25;	N/A	N/A	N/A
62-513 (d)	**PERMITTED OBSTRUCTIONS IN VISUAL CORRIDORS**	**(D)** ANY MOVING OR PARKED VEHICLES;	N/A	N/A	N/A
62-513 (e)	**PERMITTED OBSTRUCTIONS IN VISUAL CORRIDORS**	**(E)** STREET FURNITURE, INCLUDING BUT NOT LIMITED TO, CARTS AND OPEN DISPLAY BOOTHS; AND	N/A	N/A	N/A
62-513 (f)	**PERMITTED OBSTRUCTIONS IN VISUAL CORRIDORS**	**(F)** SWIMMING POOLS, PROVIDED NO PORTION PROJECTS MORE THAN 18 INCHES ABOVE THE LOWEST LEVEL OF A VISUAL CORRIDOR.	N/A	N/A	N/A
62-53	**REQUIREMENTS FOR SHORE PUBLIC WALKWAYS**				
62-53 (a)(1)	**SEAWARD EDGE REQUIREMENTS**	**(A)(1)** SUCH SHORE PUBLIC WALKWAY SHALL HAVE A SEAWARD EDGE CONTIGUOUS WITH THE SEAWARD EDGE OF THE WATERFRONT YARD AS ESTABLISHED IN SECTION 62-332 (REAR YARDS AND WATERFRONT YARDS) WITH A MINIMUM WIDTH MEASURED FROM SUCH EDGE AS SET FORTH IN PARAGRAPH (A)(2) OF THIS SECTION, OR FOR FLOATING STRUCTURES, AS SET FORTH IN SECTION 62-55, UNLESS RELOCATION OR MODIFICATION OF WIDTH IS PERMITTED PURSUANT TO THIS SECTION;	SHORE PUBLIC WALKWAY EDGE CONDITION IS CONTIGUOUS WITH SEAWARD EDGE OF WALLABOUT CHANNEL	COMPLIES	L-001.00
62-53 (a)(2)	**MINIMUM WIDTH REQUIREMENTS**	**(A)(2)** SUCH SHORE PUBLIC WALKWAY SHALL HAVE A MINIMUM WIDTH OF 30 FEET FOR ZONING LOTS DEVELOPED WITH PREDOMINANTLY COMMUNITY FACILITY OR COMMERCIAL USES IN R3, R4, R5 AND C3 DISTRICTS, AND SUCH USES IN C1 AND C2 DISTRICTS MAPPED WITHIN R1 THROUGH R5 DISTRICTS. THE MINIMUM WIDTH FOR A SHORE PUBLIC WALKWAY PROVIDED FOR A ZONING LOT DEVELOPED WITH ANY USE IN ALL OTHER DISTRICTS, OTHER THAN R1 AND R2 DISTRICTS, SHALL BE 40 FEET.	40'-0" SHORE PUBLIC WALKWAY PROVIDED	COMPLIES	L-001.00
62-53 (a)(3)	**WIDTH REDUCTION**	**(A)(3)** THE MINIMUM WIDTH OF THE SHORE PUBLIC WALKWAY SET FORTH IN PARAGRAPH (A)(2) OF THIS SECTION MAY BE REDUCED AT THE FOLLOWING LOCATIONS PROVIDED NO SHORE PUBLIC WALKWAY IS REDUCED TO LESS THAN 10 FEET:	N/A	N/A	N/A
62-53 (a)(3)(I)	**WIDTH REDUCTION ON SHALLOW PORTIONS**	**(A)(3)(I)** ON SHALLOW PORTIONS OF ZONING LOTS THAT ARE LESS THAN 150 FEET IN DEPTH, THE MINIMUM WIDTH OF A SHORE PUBLIC WALKWAY MAY BE REDUCED BY ONE FOOT FOR EVERY TWO FEET THAT THE LOT DIMENSION, MEASURED FROM SUCH EDGE, IS LESS THAN 150 FEET;	N/A	N/A	N/A
62-53 (a)(3)(II)	**WIDTH REDUCTION ON NARROW PORTIONS**	**(A)(3)(II)** ON NARROW PORTIONS OF PLATFORMS THAT ARE LESS THAN 150 FEET IN DEPTH BETWEEN THE WATER EDGES LOCATED PERPENDICULAR TO THE LANDWARD EDGE OF SUCH PLATFORM, THE MINIMUM WIDTH OF SUCH SHORE PUBLIC WALKWAY ALONG EACH OPPOSITE EDGE MAY BE REDUCED BY ONE FOOT FOR EVERY TWO FEET THAT THE PLATFORM DIMENSION IS LESS THAN 150 FEET;	N/A	N/A	N/A
62-53 (c)	**ACCESSIBILITY AND CONNECTIVITY**	**(C)** SHORE PUBLIC WALKWAYS SHALL BE ACCESSIBLE FROM A PUBLIC SIDEWALK WITHIN A STREET, PUBLIC PARK, OR OTHER ACCESSIBLE OPEN PUBLIC PLACE, ACCORDING TO THE PROVISIONS OF SECTION 62-56. SHORE PUBLIC WALKWAYS SHALL CONNECT WITH SHORE PUBLIC WALKWAYS ON ADJOINING ZONING LOTS.	SHORE PUBLIC WALKWAY IS ACCESSIBLE FROM DIVISION AVENUE	COMPLIES	L-001.00
62-56	**REQUIREMENTS FOR UPLAND CONNECTIONS**				
62-56	**UPLAND CONNECTIONS**	ALL WATERFRONT PUBLIC ACCESS AREAS PROVIDED PURSUANT TO SECTIONS 62-53, 62-54 OR 62-55 SHALL BE ACCESSIBLE FROM AN OPEN STREET, PUBLIC PARK OR OTHER PUBLIC PLACE AT INTERVALS ALONG THE SHORE PUBLIC WALKWAY NOT TO EXCEED 600 FEET BY MEANS OF EITHER A DIRECT CONNECTION OR, WHERE NO DIRECT CONNECTION EXISTS, AN UPLAND CONNECTION BETWEEN THE SHORE PUBLIC WALKWAY AND AN ADJOINING PUBLIC SIDEWALK WITHIN AN OPEN STREET, PUBLIC PARK OR OTHER PUBLIC PLACE.	NO UPLAND CONNECTION REQUIRED	N/A	N/A
62-57	**REQUIREMENTS FOR SUPPLEMENTAL PUBLIC ACCESS AREAS**				
62-57 (a)	**AREA CALCULATIONS**	**(A)** IF THE AGGREGATE AREA OF THE REQUIRED SHORE PUBLIC WALKWAYS, UPLAND CONNECTIONS, PUBLIC ACCESS AREAS ON PIERS, AND PUBLIC ACCESS AREAS IN CONJUNCTION WITH FLOATING STRUCTURES ON THE ZONING LOT, IS LESS BY 750 SQUARE FEET OR MORE THAN THE AMOUNT OF WATERFRONT PUBLIC ACCESS AREA REQUIRED BY THE TABLE IN THIS SECTION, THEN SUPPLEMENTAL PUBLIC ACCESS AREAS SHALL BE PROVIDED IN ORDER TO MEET THE TOTAL AMOUNT OF WATERFRONT PUBLIC ACCESS AREA REQUIRED BY THE TABLE. HOWEVER, WHEN A ZONING LOT IS DEVELOPED PREDOMINANTLY AS A PLAYGROUND OR PUBLICLY ACCESSIBLE PRIVATE PARK, THE REQUIREMENTS OF THIS SECTION SHALL BE DEEMED TO BE SATISFIED BY SUCH USE. **REQUIRED:** **LOT AREA: 115,244 SF X 20% = 23,049 SF REQUIRED WPAA**	PROVIDED: SHORE PUBLIC WALKWAY: 20,466 SF SUPPLEMENTAL PUBLIC ACCESS AREA: 2,584 SF TOTAL WPAA (SPW+SPAA): 23,050 SF	COMPLIES	L-001.00
62-57 (b)	**SPAA IN WETLANDS**	**(B)** WHERE SUPPLEMENTAL PUBLIC ACCESS AREAS ARE REQUIRED WITHIN NEW YORK STATE-DESIGNATED WETLANDS OR ADJACENT STATEREGULATED AREAS, THE AREA REQUIREMENTS AND THE DESIGN STANDARDS FOR SUCH SUPPLEMENTAL PUBLIC ACCESS AREAS MAY BE REDUCED OR MODIFIED BY THE NEW YORK STATE DEPARTMENT OF ENVIRONMENTAL CONSERVATION.	N/A	N/A	N/A
62-57 (c)	**DISTRICT BOUNDARY**	**(C)** WHENEVER A ZONING LOT IS DIVIDED BY A BOUNDARY BETWEEN DISTRICTS IN WHICH DIFFERENT THRESHOLDS APPLY PURSUANT TO THE TABLE IN THIS SECTION, THE WATERFRONT PUBLIC ACCESS AREA REQUIREMENT SHALL BE MET FOR THE ENTIRE ZONING LOT, PROVIDED THAT:	N/A	N/A	N/A
62-57 (c)(1)	**DISTRICT BOUNDARY**	**(C)(1)** THE TOTAL LOT AREA OR LENGTH OF SHORELINE FOR THE ENTIRE ZONING LOT IS GREATER THAN THE LOWEST THRESHOLD IN EITHER DISTRICT FOR WHICH THERE IS A TOTAL WATERFRONT PUBLIC ACCESS AREA REQUIREMENT.	N/A	N/A	N/A
62-57 (c)(2)	**DISTRICT BOUNDARY**	**(C)(2)** THE TOTAL LOT AREA OR LENGTH OF SHORELINE FOR THE ENTIRE ZONING LOT IS GREATER THAN THE LOWEST THRESHOLD IN EITHER DISTRICT FOR WHICH THERE IS A TOTAL WATERFRONT PUBLIC ACCESS AREA REQUIREMENT.	N/A	N/A	N/A
62-571	**LOCATION AND AREA REQUIREMENTS FOR SUPPLEMENTAL PUBLIC ACCESS AREAS**				
62-571 (a)(1)	**MINIMUM AREA**	**(A)(1)** THE MINIMUM AREA OF THE SUPPLEMENTAL PUBLIC ACCESS AREA: WHEN LOCATED AT THE INTERSECTION OF A SHORE PUBLIC WALKWAY AND AN UPLAND CONNECTION OR STREET, SHALL BE 750 SF, HAVE A MINIMUM WIDTH TO DEPTH RATIO OF 1:1 AND A MAXIMUM WIDTH TO DEPTH RATIO OF 3:1. THE LONGEST SIDE SHALL ADJOIN THE SHORE PUBLIC WALKWAY; OR	N/A	N/A	N/A
62-571 (a)(2)	**MINIMUM AREA**	**(A)(2)** THE MINIMUM AREA OF THE SUPPLEMENTAL PUBLIC ACCESS AREA: WHEN LOCATED ADJOINING A SHORE PUBLIC WALKWAY WITHOUT ADJOINING AN UPLAND CONNECTION OR STREET, SHALL BE 1,875 SF AND HAVE A MINIMUM WIDTH TO DEPTH RATIO OF 3:1. THE MINIMUM DEPTH PERPENDICULAR TO THE SHORE PUBLIC WALKWAY, AS A WEIGHTED AVERAGE, SHALL BE 25 FEET. **REQUIRED:** **TOTAL AREA REQUIRED: 1,875 SF** **WIDTH TO DEPTH RATIO: 3:1** **AVERAGE DEPTH: 25'-0"**	PROVIDED: TOTAL AREA: 2,584 SF AVERAGE WIDTH: 79'-6" AVERAGE DEPTH: 26'-0" WIDTH TO DEPTH RATIO: 3:1	COMPLIES	L-001.00
62-571 (b)(1)	**OPTIONS FOR PROVIDING SUPPLEMENTAL PUBLIC ACCESS AREAS**	**(B)(1)** A SUPPLEMENTAL PUBLIC ACCESS AREA MAY BE PROVIDED: TO WIDEN THE SHORE PUBLIC WALKWAY, WITH A MINIMUM WIDTH OF 10 FEET RUNNING CONTINUOUSLY ALONG THE SHORE PUBLIC WALKWAY BETWEEN ANY TWO OF THE FOLLOWING: AN UPLAND CONNECTION, OPEN STREET, PUBLIC PARK OR OTHER PUBLIC PLACE;	N/A	N/A	N/A
62-571 (b)(2)	**OPTIONS FOR PROVIDING SUPPLEMENTAL PUBLIC ACCESS AREAS**	**(B)(2)** A SUPPLEMENTAL PUBLIC ACCESS AREA MAY BE PROVIDED: AS A PEDESTRIAN SIDEWALK AREA ABUTTING A ROADBED RUNNING ALONG THE SHORELINE, PROVIDED SUCH SIDEWALK HAS A MINIMUM WIDTH OF 13 FEET AND COMPLIES WITH THE PROVISIONS FOR A TYPE 2 UPLAND CONNECTION PURSUANT TO SECTION 62-64. ANY ADDITIONAL SUPPLEMENTAL PUBLIC ACCESS AREA SHALL COMPLY WITH THE REQUIREMENTS OF THIS SECTION; OR	N/A	N/A	N/A
62-571 (b)(3)	**OPTIONS FOR PROVIDING SUPPLEMENTAL PUBLIC ACCESS AREAS**	**(B)(3)** A SUPPLEMENTAL PUBLIC ACCESS AREA MAY BE PROVIDED: AS A DEDICATED BICYCLE PATH IF SUCH PATH CONNECTS AT EACH END TO AN OPEN STREET. THE MINIMUM WIDTH OF A BICYCLE PATH SHALL BE 10 FEET, WITH AN ADDITIONAL TWO FOOT CLEARANCE ON EACH SIDE ALONG THE ENTIRE LENGTH OF THE PATH. THERE SHALL BE A PLANTED AREA BETWEEN A BICYCLE PATH AND A PAVED AREA FOR PEDESTRIAN USE, PURSUANT TO THE REQUIREMENTS OF PARAGRAPH (C) OF SECTION 62-62.	N/A	N/A	N/A
62-61	**GENERAL PROVISIONS APPLYING TO WATERFRONT PUBLIC ACCESS AREAS**				
62-61 (a)	**ELEVATED OBSTRUCTIONS**	**(A)** ALL WATERFRONT PUBLIC ACCESS AREAS SHALL BE UNOBSTRUCTED FROM THEIR LOWEST LEVEL TO THE SKY, EXCEPT AS SET FORTH IN SECTION 62-611. THE LOWEST LEVEL OF ANY PORTION OF A WATERFRONT PUBLIC ACCESS AREA SHALL BE DETERMINED BY THE ELEVATION OF THE ADJOINING PORTION ON THE SAME OR AN ADJOINING ZONING LOT OR THE PUBLIC SIDEWALK TO WHICH IT CONNECTS. REFERENCE ELEVATIONS SHALL BE ESTABLISHED FROM THE PUBLIC SIDEWALKS, WATERFRONT YARD LEVELS AND THE ELEVATIONS PREVIOUSLY ESTABLISHED BY ADJOINING ZONING LOTS AT LOT LINE INTERSECTIONS OF A WATERFRONT PUBLIC ACCESS NETWORK, AS APPLICABLE.	PROVIDED WATERFRONT PUBLIC ACCESS AREA IS UNOBSTRUCTED EXCEPT AS SET FORTH IN SECTION 62-611 (PERMITTED OBSTRUCTIONS)	COMPLIES	L-001.00
62-61 (b)	**CONTIGUOUS CIRCULATION PATHS**	**(B)** THE MINIMUM REQUIRED CIRCULATION PATH SHALL BE CONNECTED AND CONTINUOUS THROUGH ALL WATERFRONT PUBLIC ACCESS AREAS ON ADJACENT ZONING LOTS.	ALL PROVIDED CIRCULATION PATHS ARE CONNECTED AND CONTINUOUS THROUGH WATERFRONT PUBLIC ACCESS AREAS ON ADJACENT ZONING LOTS	COMPLIES	L-100.00
62-61 (c)	**ACCESSIBILITY**	**(C)** WATERFRONT PUBLIC ACCESS AREAS SHALL BE ACCESSIBLE TO PERSONS WITH PHYSICAL DISABILITIES IN ACCORDANCE WITH THE AMERICANS WITH DISABILITIES ACT AND THE AMERICAN NATIONAL STANDARDS INSTITUTE (ANSI) DESIGN GUIDELINES.	ALL PROVIDED WATERFRONT PUBLIC ACCESS AREAS COMPLY WITH ADA AND ANSI GUIDELINES	COMPLIES	L-200.00



OWNER
KENT MEMBER LLC
505 FLUSHING AVE, BROOKLYN, NY 11205

CIVIL / PARKING ENGINEER
PHILIB HABIB AND ASSOCIATES
102 MADISON AVE # 11, NEW YORK, NY 10016

LANDSCAPE ARCHITECT
MPFP
120 BROADWAY 20TH FL, NEW YORK, NY 10271

LIGHTING DESIGNER
ONE LUX STUDIO
158 WEST 29TH STREET, FL 10, NEW YORK, NY 10001

LAND USE CONSULTANT
HERRICK FEINSTEIN LLP
TWO PARK AVENUE. NEW YORK, NY 10016

REV	DATE	DESCRIPTION
	3/24/2021	ULURP SUBMISSION
	11/03/2021	ULURP SUBMISSION
	06/22/2022	ULURP SUBMISSION
	09/08/2022	ULURP SUBMISSION
	01/11/2023	DPR REVIEW
	03/22/2023	ULURP SUBMISSION
	07/14/2023	ULURP SUBMISSION
	10/2/2023	ULURP SUBMISSION
	10/20/23	ULURP SUBMISSION

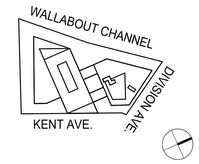

KEY PLAN:NTS

500 KENT

500 KENT AVENUE
BROOKLYN, NY 11249

ID #2019K0330

WATERFRONT PUBLIC ACCESS AREA ZONING CALCULATIONS

SCALE:

DRAWING #:
Z-02.00

ZONING SECTION	ITEM	ZONING RESOLUTION REQUIREMENT	PROVIDED	COMPLIANCE	DWG REF
62-61 (d)(1)(i)	**SITE GRADING**	**(D)(1)(I)** FOR CROSS-SECTIONAL GRADING REGULATIONS (PERPENDICULAR TO THE GENERAL DIRECTION OF PEDESTRIAN MOVEMENT), THE MINIMUM SLOPE OF A REQUIRED CIRCULATION PATH SHALL BE ONE AND ONE-HALF PERCENT TO ALLOW FOR POSITIVE DRAINAGE AND THE MAXIMUM SLOPE SHALL BE THREE PERCENT. STEPS AND STAIRWAYS ACCOMMODATING A CROSS-SECTIONAL GRADE CHANGE ARE ONLY PERMITTED OUTSIDE OF THE REQUIRED CIRCULATION PATH(S).	ALL PROVIDED CROSS SLOPES RANGE BETWEEN MINIMUM 1.50% AND MAXIMUM 3.00%	COMPLIES	L-200.00
62-61 (d)(1)(ii)	**SITE GRADING**	**(D)(1)(II)** FOR LONGITUDINAL GRADING CONTROLS (PARALLEL TO THE GENERAL DIRECTION OF PEDESTRIAN MOVEMENT), GRADE CHANGES SHALL BE PERMITTED ALONG THE LENGTH OF A REQUIRED CIRCULATION PATH BY MEANS OF STEPS OR RAMPS IN COMPLIANCE WITH THE REQUIREMENTS FOR HANDICAPPED ACCESSIBILITY.	LONGITUDINAL SLOPES COMPLY WITH HANDICAPPED ACCESSIBILITY	COMPLIES	L-200.00
62-61 (d)(2)	**SITE GRADING IN PLANTING AREAS**	**(D)(2)** WITHIN THREE FEET OF THE EDGE OF ANY PLANTING AREA, THE GRADE LEVEL OF SUCH PLANTING AREA SHALL BE NO MORE THAN THREE FEET HIGHER OR LOWER THAN THE ADJOINING LEVEL OF THE PEDESTRIAN CIRCULATION PATH.	NO PROVIDED PLANTING AREA HIGHER THAN 3 FEET ABOVE FINISHED GRADE	COMPLIES	L-200.00
62-61 (e)	**VEHICLE AND EMERGENCY ACCESS**	**(E)** VEHICULAR ACCESS IS PROHIBITED WITHIN WATERFRONT PUBLIC ACCESS AREAS EXCEPT FOR EMERGENCY AND MAINTENANCE VEHICULAR ACCESS. PARKING AREAS, PASSENGER DROP-OFFS, DRIVEWAYS, LOADING BERTHS AND BUILDING TRASH STORAGE FACILITIES ARE NOT PERMITTED WITHIN, OR ALLOWED TO BE ACCESSED OR SERVICED THROUGH, A WATERFRONT PUBLIC ACCESS AREA, EXCEPT FOR VEHICULAR ACCESS TO DROP-OFFS AND OTHER REQUIRED SERVICES ACCESSORY TO DOCKING FACILITIES OR TO DEVELOPMENT ON A PIER OR FLOATING STRUCTURE. SUCH VEHICULAR WAYS SHALL BE USED ONLY TO PROVIDE ACCESS ACROSS THE SHORE PUBLIC WALKWAY. NO SINGLE DRIVEWAY SHALL EXCEED A WIDTH OF 25 FEET. BOLLARDS SHALL BE INSTALLED IN ACCORDANCE WITH SECTION 62-651. A MINIMUM 12 INCH PAVED BORDER SHALL BE INSTALLED ALONG THE DRIVEWAY BOUNDARIES AND SHALL HAVE A COLOR DISTINCT FROM THE PAVING OF THE ADJOINING PAVED SURFACE. VEHICULAR ROADWAYS ARE PERMITTED AS PART OF AN UPLAND CONNECTION IN ACCORDANCE WITH THE REGULATIONS OF SECTION 62-56. ANY VEHICULAR ROADWAY CROSSING A REQUIRED WATERFRONT PUBLIC ACCESS AREA SHALL COMPLY WITH THE REQUIREMENTS FOR PAVING IN SECTION 62-656.	NO VEHICULAR ACCESS EXCEPT FOR EMERGENCY AND MAINTENANCE VEHICLES	COMPLIES	L-100.00
62-611	**PERMITTED OBSTRUCTIONS**				
62-611 (a)(1)	**PERMITTED OBSTRUCTIONS IN ALL AREAS**	WATERFRONT PUBLIC ACCESS AREAS SHALL BE UNOBSTRUCTED FROM THEIR LOWEST LEVEL TO THE SKY EXCEPT THAT THE OBSTRUCTIONS LISTED IN THIS SECTION SHALL BE PERMITTED, AS APPLICABLE. HOWEVER, NO OBSTRUCTIONS OF ANY KIND SHALL BE PERMITTED WITHIN A REQUIRED CIRCULATION PATH, EXCEPT AS SPECIFICALLY SET FORTH HEREIN. **(A)(1)** TREES AND OTHER PLANT MATERIALS, INCLUDING GRASSES, VINES, SHRUBS AND FLOWERS, WATERING EQUIPMENT, ARBORS,TRELLISES, OBSERVATION DECKS, RETAINING WALLS;	TREES, OTHER PLANT MATERIALS, WATERING EQUIPMENT, AND RETAINING WALLS PROVIDED	COMPLIES	L-001.00
62-611 (a)(2)	**PERMITTED OBSTRUCTIONS IN ALL AREAS**	**(A)(2)** SEATING, LITTER RECEPTACLES, DRINKING FOUNTAINS, OTHER OUTDOOR FURNITURE;	SEATING, LITTER RECEPTACLES, AND OTHER OUTDOOR FURNITURE PROVIDED	COMPLIES	L-400.00
62-611 (a)(3)	**PERMITTED OBSTRUCTIONS IN ALL AREAS**	**(A)(3)** FOUNTAINS, REFLECTING POOLS, WATERFALLS, SCULPTURES AND OTHER WORKS OF ART, TEMPORARY EXHIBITIONS;	NO FOUNTAINS, REFLECTING POOLS, WATERFALLS, SCULPTURES, OR TEMPORARY EXHIBITIONS PROVIDED	COMPLIES	N/A
62-611 (a)(4)	**PERMITTED OBSTRUCTIONS IN ALL AREAS**	**(A)(4)** GUARDRAILS, BOLLARDS, GATES AND OTHER PROTECTIVE BARRIERS, IN ACCORDANCE WITH SECTION 62-651;	GUARDRAILS AND BOLLARDS PROVIDED	COMPLIES	L-100.00
62-611 (a)(5)	**PERMITTED OBSTRUCTIONS IN ALL AREAS**	**(A)(5)** LIGHTS AND LIGHTING STANCHIONS, FLAG POLES, EXERCISE AND OTHER RECREATIONAL EQUIPMENT;	LIGHTS AND LIGHTING STANCHIONS PROVIDED	COMPLIES	L-403.00
62-611 (a)(6)	**PERMITTED OBSTRUCTIONS IN ALL AREAS**	**(A)(6)** KIOSKS AND OPEN AIR CAFES	NO KIOSKS OR OPEN AIR CAFES PROVIDED	COMPLIES	N/A
62-611 (a)(7)	**PERMITTED OBSTRUCTIONS IN ALL AREAS**	**(A)(7)** STRUCTURAL LANDSCAPED BERMS AND ASSOCIATED FLOOD GATES, INCLUDING EMERGENCY EGRESS SYSTEMS THAT ARE ASSEMBLED PRIOR TO A STORM AND REMOVED THEREAFTER, PROVIDED THE HEIGHT OF SUCH BERM DOES NOT EXCEED THE FLOOD-RESISTANT CONSTRUCTION ELEVATION REQUIRED ON THE ZONING LOT OR FIVE FEET ABOVE THE LOWEST ADJOINING GRADE OF THE WATERFRONT YARD ESTABLISHED PURSUANT TO SECTION 62-332 (REAR YARDS AND WATERFRONT YARDS), WHICHEVER IS HIGHER;	NO STRUCTURAL LANDSCAPED BERMS OR ASSOCIATED FLOOD GATES	COMPLIES	N/A
62-611 (a)(8)	**PERMITTED OBSTRUCTIONS IN ALL AREAS**	**(A)(8)** TEMPORARY FLOOD CONTROL DEVICES AND ASSOCIATED PERMANENT FIXTURES, INCLUDING EMERGENCY EGRESS SYSTEMS THAT ARE ASSEMBLED PRIOR TO A STORM AND REMOVED THEREAFTER. PERMANENT FIXTURES FOR SELF-STANDING FLOOD CONTROL DEVICES SHALL BE FLUSH-TO-GRADE, AND SHALL BE PERMITTED OBSTRUCTIONS WITHIN A REQUIRED CIRCULATION PATH.	NO TEMPORARY FLOOD CONTROL DEVICES OR ASSOCIATED PERMANENT FIXTURES PROVIDED	COMPLIES	N/A
62-611 (b)(1)	**PERMITTED OBSTRUCTIONS IN SCREENING BUFFERS**	**(B)(1)** IN SCREENING BUFFERS: PAVED ENTRANCES TO BUILDINGS FRONTING UPON A SCREENING BUFFER, INCLUDING AWNINGS AND CANOPIES OVER SUCH ENTRANCES, SEATING LOCATED WITHIN 42 INCHES OF AN ADJACENT PAVED AREA, BICYCLE RACKS WITHIN SIX FEET OF THE SIDEWALK OF AN OPEN ACCESSIBLE STREET OR WITHIN 10 FEET OF AN UPLAND CONNECTION;	N/A	N/A	N/A
62-611 (b)(2)	**PERMITTED OBSTRUCTIONS IN SCREENING BUFFERS**	**(B)(2)** IN SCREENING BUFFERS: SERVICE EQUIPMENT NECESSARY FOR MAINTENANCE OF WATERFRONT PUBLIC ACCESS AREAS OR THE FUNCTIONING OF ADJACENT STRUCTURES SUCH AS WATERING EQUIPMENT, SHEDS FOR TOOL STORAGE, ELECTRICAL TRANSFORMERS OR OTHER MECHANICAL OR ELECTRICAL SERVICE DEVICES, PROVIDED ALL SUCH EQUIPMENT COVERS NO MORE THAN 100 SQUARE FEET IN ANY LOCATION AND HAS A MAXIMUM HEIGHT OF 10 FEET. SUCH OBSTRUCTIONS SHALL BE SCREENED IN ACCORDANCE WITH SECTION 62-655 (PLANTING AND TREES);	N/A	N/A	N/A
62-611 (b)(3)	**PERMITTED OBSTRUCTIONS IN SCREENING BUFFERS**	**(B)(3)** IN SCREENING BUFFERS: EXHAUST VENTS LOCATED ON BUILDING WALLS FRONTING ON THE SCREENING BUFFER, ONLY IF THE BOTTOM OF SUCH VENT IS A MINIMUM OF 10 FEET ABOVE THE ADJACENT GROUND LEVEL AND PROJECTS NO MORE THAN FOUR INCHES FROM THE BUILDING WALL.	N/A	N/A	N/A
62-611 (c)	**PERMITTED OBSTRUCTIONS BEYOND 20'-0" OF SHORELINE**	**(C)** BEYOND 20 FEET OF THE SHORELINE: TOT-LOTS, PLAYGROUNDS, DOG RUNS, PUBLIC TELEPHONES, TOILETS, BICYCLE RACKS.	ONLY PERMITTED OBSTRUCTIONS PROVIDED BEYOND 20 FEET OF SHORELINE	COMPLIES	L-001.00
62-62	**DESIGN REQUIREMENTS FOR SHORE PUBLIC WALKWAYS AND SUPPLEMENTAL PUBLIC ACCESS AREAS**				
62-62 (a)(1)	**SHORE PUBLIC WALKWAY CIRCULATION PATH MINIMUM WIDTH AND PROXIMITY TO SHORELINE**	**(A)(1)** IN ALL DISTRICTS, A SHORE PUBLIC WALKWAY SHALL PROVIDE A CIRCULATION PATH WITH A MINIMUM CLEAR WIDTH OF 12 FEET, EXCEPT THAT IN R3, R4, R5, C1, C2 AND C3 DISTRICTS, AND IN C1 OR C2 DISTRICTS MAPPED WITHIN R1 THROUGH R5 DISTRICTS, THE MINIMUM CLEAR WIDTH SHALL BE 10 FEET. SUCH PATH SHALL BE LOCATED WITHIN 10 FEET OF THE SHORELINE FOR AT LEAST 20 PERCENT OF THE LENGTH OF SUCH SHORELINE, AND THE REMAINDER OF THE PATH MAY BE LOCATED ANYWHERE WITHIN THE SHORE PUBLIC WALKWAY OR SUPPLEMENTAL PUBLIC ACCESS AREA. SECONDARY PATHS, WHEN PROVIDED, SHALL BE AT LEAST SIX FEET WIDE. WHEN TWO CIRCULATION PATHS ARE PARALLEL TO EACH OTHER, THEY SHALL BE CONNECTED BY OTHER PATHS OR ACCESSIBLE LAWN AT INTERVALS NOT TO EXCEED 200 FEET. IN ORDER TO FACILITATE THE FUTURE CONNECTION OF PEDESTRIAN CIRCULATION PATHS, WHERE A SHORE PUBLIC WALKWAY IS ON A ZONING LOT THAT IS ADJACENT TO A ZONING LOT WITHOUT A SHORE PUBLIC WALKWAY, THE PORTION OF THE CIRCULATION PATH THAT TERMINATES AT THE COMMON ZONING LOT LINE SHALL BE LOCATED WITHIN 30 FEET OF THE SHORELINE. **REQUIRED:** **523 LINEAR FEET OF SHORELINE X 20% = 104.60 LF OF CIRCULATION PATH REQUIRED WITHIN 10 FEET OF SHORELINE** **6 FOOT CLEAR MINIMUM SECONDARY CIRCULATION PATH**	PROVIDED: 253 LF (48% OF SHORELINE LENGTH) OF CIRCULATION PATH PROVIDED WITHIN 10 FEET OF SHORELINE, GETDOWN INCLUDED. 6 FOOT CLEAR MINIMUM SECONDARY CIRCULATION PATH PROVIDED	COMPLIES COMPLIES	L-100.00 L-100.00
62-62 (a)(2)	**SUPPLEMENTAL ACCESS AREA CIRCULATION PATH MINIMUM WIDTH**	**(A)(2)** A SUPPLEMENTAL PUBLIC ACCESS AREA SHALL PROVIDE AT LEAST ONE CIRCULATION PATH WITH A MINIMUM CLEAR WIDTH OF SIX FEET THAT PROVIDES ACCESS THROUGHOUT THE SUPPLEMENTAL PUBLIC ACCESS AREA. THIS REQUIREMENT MAY BE MET BY A CIRCULATION PATH OF THE SHORE PUBLIC WALKWAY THAT TRAVERSES THE SUPPLEMENTAL PUBLIC ACCESS AREA;	6 FOOT CLEAR CIRCULATION PATH THROUGH SPAA PROVIDED	COMPLIES	L-100.00
62-62 (b)	**SEATING**	**(B)** ONE LINEAR FOOT OF SEATING SHALL BE PROVIDED FOR EVERY 75 SQUARE FEET OF SHORE PUBLIC WALKWAY AND SUPPLEMENTAL PUBLIC ACCESS AREA. SUCH SEATING MAY BE LOCATED ANYWHERE WITHIN SUCH PUBLIC ACCESS AREAS AND SHALL COMPLY WITH THE STANDARDS OF SECTION 62-652. IN ADDITION, UP TO 25 PERCENT OF REQUIRED SEATING MAY BE LOCATED SEAWARD OF THE SHORE PUBLIC WALKWAY AND SHALL BE SUBJECT TO THE PROVISIONS OF SECTION 62-652, PARAGRAPH (H). **REQUIRED:** **23,050 SF WPAA (**SPW + SPAA**) / 75 SF = 307.33 LF REQUIRED SEATING**	PROVIDED: 378.684 LF SEATING PROVIDED	COMPLIES	L-401.00
62-62 (c)(1)	**PLANTING AREAS**	**(C)(1)** AN AREA EQUAL TO AT LEAST 35 PERCENT OF THE AREA OF THE SHORE PUBLIC WALKWAY AND SUPPLEMENTAL PUBLIC ACCESS AREA SHALL BE PLANTED. **REQUIRED:** **23,050 SF WPAA (**SPW + SPAA**) X 35% = 8,067.50 SF REQUIRED PLANTING**	PROVIDED: 8,787.38 SF PLANTING PROVIDED	COMPLIES	L-300.00
62-62 (c)(1)(i)	**LAWN AREAS**	**(C)(1)(I)** WHERE A SUPPLEMENTAL PUBLIC ACCESS AREA IS GREATER THAN 1,875 SQUARE FEET, AT LEAST 15 PERCENT OF THE REQUIRED PLANTING AREA OF THE SHORE PUBLIC WALKWAY AND SUPPLEMENTAL PUBLIC ACCESS AREA, COMBINED, SHALL BE PROVIDED AS LAWN; **REQUIRED:** **8,067.50 LF REQUIRED PLANTING X 15% = 1,210.12 SF REQUIRED LAWN**	PROVIDED: 2,305.73 SF LAWN PROVIDED	COMPLIES	L-300.00
62-62 (c)(1)(ii)	**PLANTING SEAWARD OF SHORE PUBLIC WALKWAY**	**(C)(1)(II)** UP TO 30 PERCENT OF THE REQUIRED PLANTING AREA MAY BE PROVIDED AS TIDAL WETLAND AREA AND SHALL BE MEASURED IN PLAN VIEW AND NOT ALONG THE PLANTED SLOPE; OR	N/A	N/A	N/A
62-62 (c)(1)(III)	**PLANTING NEAR BICYCLE PATHS**	**(C)(1)(III)** WHEN A DEDICATED BICYCLE PATH IS PROVIDED WITHIN A SUPPLEMENTAL PUBLIC ACCESS AREA, A PLANTING AREA WITH A WIDTH OF AT LEAST FIVE FEET SHALL BE PROVIDED BETWEEN THE BICYCLE PATH AND ANY PAVED AREA FOR PEDESTRIAN USE. FOR THE PURPOSE OF CALCULATING PLANTING REQUIREMENTS, THE AREA OF THE BICYCLE PATH MAY BE DEDUCTED FROM THE COMBINED AREA OF THE SHORE PUBLIC WALKWAY OR SUPPLEMENTAL PUBLIC ACCESS AREA.	N/A	N/A	N/A
62-62 (c)(2)(i)	**SCREENING BUFFER REQUIREMENTS**	**(C)(2)(I)** A SCREENING BUFFER SHALL BE PROVIDED WITHIN THE SHORE PUBLIC WALKWAY OR THE SUPPLEMENTAL PUBLIC ACCESS AREA, RUNNING ALONG THE ENTIRE UPLAND BOUNDARY OF SUCH AREA WHERE IT ABUTS NON-PUBLICLY ACCESSIBLE AREAS OF THE ZONING LOT, EXCEPT AS WAIVED PURSUANT TO PARAGRAPH (C)(2)(III) OF THIS SECTION. ANY SCREENING BUFFER PROVIDED PURSUANT TO THIS SECTION MAY BE USED TO MEET THE PLANTING REQUIREMENTS OF PARAGRAPH (C)(1) OF THIS SECTION.	N/A	N/A	N/A
62-62 (c)(2)(ii)	**SCREENING BUFFER MINIMUM WIDTH**	**(C)(2)(II)** THE MINIMUM WIDTH OF THE SCREENING BUFFER SHALL BE SIX FEET. ON SHALLOW LOTS WHERE THE WIDTH OF THE SHORE PUBLIC WALKWAY MAY BE REDUCED PURSUANT TO SECTION 62-53, THE WIDTH OF THE SCREENING BUFFER MAY BE REDUCED PROPORTIONALLY BUT SHALL NOT BE LESS THAN FOUR FEET.	N/A	N/A	N/A
62-62 (c)(2)(iii)(a)	**SCREENING BUFFER EXEMPTIONS**	**(C)(2)(III)(A)** NO SCREENING BUFFER SHALL BE REQUIRED: ADJACENT TO A PRIVATE DRIVE, A STREET OR AT THE ENTRANCES TO BUILDINGS; OR	N/A	N/A	N/A
62-62 (c)(2)(iii)(b)	**SCREENING BUFFER EXEMPTIONS**	**(C)(2)(III)(B)** NO SCREENING BUFFER SHALL BE REQUIRED: FOR A COMMERCIAL OR COMMUNITY FACILITY USE WITHIN A DISTANCE OF 15 FEET FROM THE SIDEWALK OR WATERFRONT PUBLIC ACCESS AREA, THAT IS GLAZED WITH WINDOWS, TRANSOMS OR GLAZED PORTIONS OF DOORS IN ACCORDANCE WITH THE PROVISIONS OF SECTION 37-34 (MINIMUM TRANSPARENCY REQUIREMENTS).	N/A	N/A	N/A



OWNER
KENT MEMBER LLC
505 FLUSHING AVE, BROOKLYN, NY 11205

CIVIL / PARKING ENGINEER
PHILIB HABIB AND ASSOCIATES
102 MADISON AVE # 11, NEW YORK, NY 10016

LANDSCAPE ARCHITECT
MPFP
120 BROADWAY 20TH FL, NEW YORK, NY 10271

LIGHTING DESIGNER
ONE LUX STUDIO
158 WEST 29TH STREET, FL 10, NEW YORK, NY 10001

LAND USE CONSULTANT
HERRICK FEINSTEIN LLP
TWO PARK AVENUE. NEW YORK, NY 10016

REV	DATE	DESCRIPTION
	3/24/2021	ULURP SUBMISSION
	11/03/2021	ULURP SUBMISSION
	06/22/2022	ULURP SUBMISSION
	09/08/2022	ULURP SUBMISSION
	01/11/2023	DPR REVIEW
	03/22/2023	ULURP SUBMISSION
	07/14/2023	ULURP SUBMISSION
	10/2/2023	ULURP SUBMISSION
	10/20/23	ULURP SUBMISSION

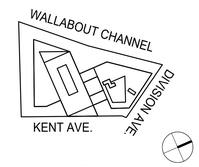

KEY PLAN:NTS

500 KENT

500 KENT AVENUE
BROOKLYN, NY 11249

ID #2019K0330

WATERFRONT PUBLIC ACCESS AREA ZONING CALCULATIONS

SCALE:

DRAWING #:

Z-03.00

ZONING SECTION	ITEM	ZONING RESOLUTION REQUIREMENT	PROVIDED	COMPLIANCE	DWG REF
62-62 (c)(3)(i)	**CANOPY TREES**	**(C)(3)(I)** A MINIMUM OF ONE CANOPY TREE SHALL BE PROVIDED FOR EVERY 2,000 SQUARE FEET OF SHORE PUBLIC WALKWAY AND SUPPLEMENTAL PUBLIC ACCESS AREA. IN NO EVENT MAY A SHORE PUBLIC WALKWAY HAVE LESS THAN TWO CANOPY TREES FOR EVERY 100 FEET OF SHORELINE. **REQUIRED:** **23,050 SF WPAA (**SPW + SPAA**) / 2,000 SF = 12 CANOPY TREES REQUIRED**	PROVIDED: 17 CANOPY TREES PROVIDED 42 TREES PROVIDED TOTAL	COMPLIES	L-301.00
62-62 (c)(3)(ii)	**ADDITIONAL PLANTING**	**(C)(3)(II)** IN ADDITION TO THE TREES REQUIRED PURSUANT TO PARAGRAPH (C)(3)(I) OF THIS SECTION, FOR EVERY 1,250 SQUARE FEET OF SHORE PUBLIC WALKWAY AND SUPPLEMENTAL PUBLIC ACCESS AREA, ONE OF THE FOLLOWING MUST BE PROVIDED: A CANOPY TREE, AN ORNAMENTAL TREE OR A MULTI-STEMMED EQUIVALENT, 60 SQUARE FEET OF PLANTING BEDS OR 110 SQUARE FEET OF ACCESSIBLE LAWN. TREES AND ADDITIONAL PLANTING AREAS MAY BE LOCATED ANYWHERE WITHIN THE SHORE PUBLIC WALKWAY OR SUPPLEMENTAL PUBLIC ACCESS AREA AND SHALL COMPLY WITH THE STANDARDS OF SECTION 62-655. **REQUIRED:** **23,050 SF WPAA (**SPW + SPAA**) / 1,250 SF = 18 ADDITIONAL TREES REQUIRED**	PROVIDED: 25 ADDITIONAL TREES PROVIDED 42 TREES PROVIDED TOTAL	COMPLIES	L-301.00
62-62 (c)(4)(i)	**PLANTING REDUCTIONS**	**(C)(4)(I)** THE MINIMUM PLANTING AREA, REQUIRED BY PARAGRAPH (C)(1) OF THIS SECTION, MAY BE REDUCED BY 10 SQUARE FEET FOR EVERY LINEAR FOOT OF: SHORELINE IMPROVED FOR BOAT LAUNCHING OR MOORING OR DESIGNED WITH ARCHITECTURAL FEATURES TO FACILITATE DIRECT ACCESS TO THE WATER, SUCH AS STEPS OR OTHER FORMS OF "GET-DOWNS," EXCEPT THAT RIP-RAP USED AS STABILIZED SHORE SHALL NOT QUALIFY FOR A PLANTING REDUCTION; OR	N/A	N/A	N/A
62-62 (c)(4)(II)	**PLANTING REDUCTIONS**	**(C)(4)(II)** THE MINIMUM PLANTING AREA, REQUIRED BY PARAGRAPH (C)(1) OF THIS SECTION, MAY BE REDUCED BY 10 SQUARE FEET FOR EVERY LINEAR FOOT OF: WE USES WITH FRONTAGE ADJOINING, AND HAVING A PUBLIC ENTRANCE ON, THE SHORE PUBLIC WALKWAY OR SUPPLEMENTAL PUBLIC ACCESS AREA, PROVIDED THAT THE SCREENING BUFFER FOR SUCH SHORE PUBLIC WALKWAY OR SUPPLEMENTAL PUBLIC ACCESS AREA IS WAIVED PURSUANT TO THE CONDITIONS OF PARAGRAPH (C)(2)(III) OF THIS SECTION.	N/A	N/A	N/A
62-62 (d)	**BICYCLE PARKING**	BICYCLE RACKS SUFFICIENT TO PROVIDE AT LEAST FOUR BICYCLE PARKING SPACES SHALL BE PROVIDED WITHIN A WATERFRONT PUBLIC ACCESS AREA. FURTHERMORE, WHEN THE COMBINED AREA OF THE SHORE PUBLIC WALKWAY AND SUPPLEMENTAL PUBLIC ACCESS AREA IS GREATER THAN 8,000 SQUARE FEET, TWO ADDITIONAL BICYCLE PARKING SPACES SHALL BE PROVIDED FOR EVERY ADDITIONAL 2,000 SQUARE FEET OF SHORE PUBLIC WALKWAY OR SUPPLEMENTAL PUBLIC ACCESS AREA. BICYCLE RACKS SHALL BE ADJACENT TO A CIRCULATION PATH AND AT LEAST 20 FEET FROM THE SHORELINE. SUCH BICYCLE RACKS MAY BE LOCATED IN PUBLIC SIDEWALKS ADJACENT TO THE ZONING LOT. ALL BICYCLE RACKS SHALL COMPLY WITH THE STANDARDS OF SECTION 62-657. **REQUIRED:** **4 BICYCLE PARKING SPACES FOR WPAA GREATER THAN 8,000 SF** **AN TWO ADDITIONAL BICYCLE PARKING SPACES FOR EVERY ADDITIONAL 2,000 SF OF WPAA** **WPAA AREA: 23,050 SF = 4 BICYCLE PARKING SPACES** **23,050 SF - 8 ,000 SF = 15,050 SF / 2,000 SF =** **15,050 SF / 2,000 SF = 7 ADDITIONAL BICYCLE PARKING SPACES**	PROVIDED: 12 BICYCLE PARKING SPACES	COMPLIES	L-401.00
62-62 (e)	**TRASH RECEPTACLES**	ONE TRASH RECEPTACLE SHALL BE PROVIDED FOR EVERY 4,000 SF OF SHORE PUBLIC WALKWAY AND SUPPLEMENTAL PUBLIC ACCESS AREA, AND ALL TRASH RECEPTACLES SHALL BE LOCATED IN VISIBLE AND CONVENIENT LOCATIONS. ALL TRASH RECEPTACLES SHALL COMPLY WITH THE STANDARDS OF SECTION 62-658. **REQUIRED:** **23,050 SF / 4,000 SF = 6 TRASH RECEPTACLES REQUIRED**	REQUIRED: 6 TRASH RECEPTACLES PROVIDED (5 WITHIN SHORE PUBLIC WALKWAY AND 1 WITHIN SUPPLEMENTAL PUBLIC ACCESS AREA	COMPLIES	L-401.00
62-64	**DESIGN REQUIREMENTS FOR UPLAND CONNECTIONS**				
62-64	**UPLAND CONNECTIONS**	UPLAND CONNECTIONS SHALL BE IMPROVED IN ACCORDANCE WITH PROVISIONS OF SECTION 62-64	NO UPLAND CONNECTION REQUIRED	N/A	N/A
62-65	**PUBLIC ACCESS DESIGN REFERENCE STANDARDS**				
62-65	**DESIGN REFERENCE STANDARDS**	THE STANDARDS OF THIS SECTION, INCLUSIVE, SHALL BE APPLICABLE TO ALL WATERFRONT PUBLIC ACCESS AREA AND VISUAL CORRIDORS. NO HOLLOW PLASTIC MATERIAL, SUCH AS PVC OR SIMILAR MATERIAL SHALL BE PERMITTED IN GUARDRAILS, FENCES, SEATING, TRASH RECEPTACLES, OR OTHER SIMILAR FURNITURE WITHIN A WATERFRONT PUBLIC ACCESS AREA. HOWEVER, HIGH DENSITY POLYETHYLENE SHALL BE PERMITTED	NO HOLLOW PLASTIC (OR SIMILAR) MATERIAL PROVIDED	COMPLIES	L-400.00
62-651	**GUARDRAIL GATES AND OTHER PROTECTIVE BARRIERS**				
62-651 (a)	**GUARDRAILS**	**(A)** FOR THE PURPOSES OF THIS PARAGRAPH, (A), THE TERM "GUARDRAIL" SHALL REFER ONLY TO FENCING OR SIMILAR STRUCTURES PROVIDED ALONG A BULKHEAD, STABILIZED SHORE OR THE WATER EDGES OF A PIER OR PLATFORM. WHEN A GUARDRAIL IS PROVIDED, IT SHALL HAVE A MAXIMUM HEIGHT OF 42 INCHES MEASURED FROM THE ADJOINING GRADE LEVEL, AND SHALL BE AT LEAST 70 PERCENT OPEN. GUARDRAILS MAY BE MOUNTED ON A SOLID CURB NOT HIGHER THAN SIX INCHES. A GUARDRAIL MAY BE SUBSTITUTED FOR A WALL, PURSUANT TO PARAGRAPH (C)(3) OF THIS SECTION. **REQUIRED:** **GUARDRAILS SHALL HAVE A MAXIMUM HEIGHT OF 42 INCHES** **GUARDRAILS SHALL BE AT LEAST 70 PERCENT OPEN**	PROVIDED: 42" HIGH STAINLESS STEEL MESH GUARDRAIL WITH A MINIMUM OPENING OF 70 PERCENT PROVIDED	COMPLIES	L-602.00
62-651 (b)(1)	**BOLLARDS**	**(B)(1)** BOLLARDS SHALL BE LIMITED TO THE FOLLOWING LOCATIONS:	NO BOLLARDS PROVIDED	N/A	N/A
62-651 (b)(1)(i)	**BOLLARDS**	**(B)(1)(I)** ALONG THE BULKHEAD, STABILIZED SHORE OR THE WATER EDGE OF A PIER OF PLATFORM;	N/A	N/A	N/A
62-651 (b)(1)(ii)	**BOLLARDS**	**(B)(1)(ii)** ALONG THE ZONING LOT LINE ADJACENT TO, AND LIMITING ACCESS FROM AN UPLAND STREET; AND	N/A	N/A	N/A
62-651 (b)(1)(iii)	**BOLLARDS**	**(B)(1)(iii)** ALONG THE BOUNDARIES OF A ROADWAY WITHIN AN UPLAND CONNECTION.	N/A	N/A	N/A
62-651 (c)(1)	**FENCES AND WALLS**	**(C)(1)** FENCES AND WALLS, WHEN PROVIDED, SHALL BE LIMITED TO THE FOLLOWING LOCATIONS:	NO FENCES OR WALLS PROVIDED		N/A
62-651 (c)(1)(i)	**FENCES AND WALLS**	**(C)(1)(I)** ALONG THE BOUNDARY OF A WATERFRONT PUBLIC ACCESS AREA AND AN ADJOINING PRIVATE AREA ON THE ZONING LOT;	N/A	N/A	N/A
62-651 (c)(1)(ii)	**FENCES AND WALLS**	**(C)(1)(II)** AROUND THE PERIMETER OF A PLAYGROUND, TOT-LOT OR DOG-RUN;	N/A	N/A	N/A
62-651 (c)(1)(iii)	**FENCES AND WALLS**	**(C)(1)(III)** ADJOINING WD USES	N/A	N/A	N/A
62-651 (c)(1)(iv)	**FENCES AND WALLS**	**(C)(1)(IV)** WITHIN A VISUAL CORRIDOR; AND	N/A	N/A	N/A
62-651 (c)(1)(v)	**FENCES AND WALLS**	**(C)(1)(V)** ALONG ANY GRADE LEVEL CHANGE OF 30 INCHES OR GREATER.	N/A	N/A	N/A
62-651 (c)(2)	**FENCES AND WALLS**	**(C)(2)** FENCES SHALL HAVE A MAXIMUM HEIGHT OF 36 INCHES MEASURED FROM THE ADJOINING GRADE LEVEL, AND BE AT LEAST 70 PERCENT OPEN. FENCES MAY BE MOUNTED ON A SOLID CURB NOT HIGHER THAN SIX INCHES.	N/A	N/A	N/A
62-651 (c)(3)	**FENCES AND WALLS**	**(C)(3)** WALLS SHALL NOT EXCEED A HEIGHT OF 21 INCHES, AND MAY BE FULLY OPAQUE.	N/A	N/A	N/A
62-651 (c)(4)	**FENCES AND WALLS**	GATES ATTACHED TO FENCES AND WALLS THAT LIMIT PHYSICAL ACCESS TO WATERFRONT PUBLIC ACCESS AREAS FROM STREETS, PUBLIC PARKS OR OTHER PUBLIC WAYS, OR FROM ADJACENT WATERFRONT PUBLIC ACCESS AREAS ON ADJOINING ZONING LOTS, SHALL COMPLY WITH THE PROVISIONS OF THIS PARAGRAPH (D). SUCH GATES SHALL BE PERMITTED ONLY AT THE BOUNDARIES OF WATERFRONT PUBLIC ACCESS AREAS AND SUCH ADJACENT PUBLICLY ACCESSIBLE AREAS, EXCEPT THAT IN TYPE 1 UPLAND CONNECTIONS GATES MAY BE LOCATED AT THE SEAWARD BOUNDARY OF THE ENTRY AREA. GATES SHALL NOT INTRUDE INTO ANY PLANTING AREA. GATES MAY BE CLOSED ONLY PURSUANT TO SECTION 62-71 THE MAXIMUM HEIGHT OF A GATE SHALL BE FOUR FEET ABOVE THE ADJOINING GRADE LEVEL. GATES SHALL BE NO MORE THAN 30 PERCENT OPAQUE. WHEN OPENED FOR ACCESS, 70 PERCENT OF THE TOTAL WIDTH, IN AGGREGATE, OF THE WATERFRONT PUBLIC ACCESS AREA SHALL BE FREE OF OBSTRUCTIONS ASSOCIATED WITH THE GATE, AND THERE SHALL BE A MINIMUM CLEAR DISTANCE OF AT LEAST 16 FEET BETWEEN ANY TWO OBSTRUCTIONS OF THE GATE. IN ADDITION, IN ITS OPEN POSITION, THE GATE AND ITS SUPPORT STRUCTURES SHALL NOT OBSTRUCT:	N/A	N/A	N/A
62-651 (d)	**FENCES AND WALLS**	GATES ATTACHED TO FENCES AND WALLS THAT LIMIT PHYSICAL ACCESS TO WATERFRONT PUBLIC ACCESS AREAS FROM STREETS, PUBLIC PARKS OR OTHER PUBLIC WAYS, OR FROM ADJACENT WATERFRONT PUBLIC ACCESS AREAS ON ADJOINING ZONING LOTS, SHALL COMPLY WITH THE PROVISIONS OF THIS PARAGRAPH (D). SUCH GATES SHALL BE PERMITTED ONLY AT THE BOUNDARIES OF WATERFRONT PUBLIC ACCESS AREAS AND SUCH ADJACENT PUBLICLY ACCESSIBLE AREAS, EXCEPT THAT IN TYPE 1 UPLAND CONNECTIONS GATES MAY BE LOCATED AT THE SEAWARD BOUNDARY OF THE ENTRY AREA. GATES SHALL NOT INTRUDE INTO ANY PLANTING AREA. GATES MAY BE CLOSED ONLY PURSUANT TO SECTION 62-71 THE MAXIMUM HEIGHT OF A GATE SHALL BE FOUR FEET ABOVE THE ADJOINING GRADE LEVEL. GATES SHALL BE NO MORE THAN 30 PERCENT OPAQUE. WHEN OPENED FOR ACCESS, 70 PERCENT OF THE TOTAL WIDTH, IN AGGREGATE, OF THE WATERFRONT PUBLIC ACCESS AREA SHALL BE FREE OF OBSTRUCTIONS ASSOCIATED WITH THE GATE, AND THERE SHALL BE A MINIMUM CLEAR DISTANCE OF AT LEAST 16 FEET BETWEEN ANY TWO OBSTRUCTIONS OF THE GATE. IN ADDITION, IN ITS OPEN POSITION, THE GATE AND ITS SUPPORT STRUCTURES SHALL NOT OBSTRUCT:	NO GATES PROVIDED	N/A	N/A
62-651 (d)(1)	**FENCES AND WALLS**	**(D)(1)** ANY CIRCULATION PATH;	N/A	N/A	N/A
62-651 (d)(2)	**FENCES AND WALLS**	**(D)(2)** 25 PERCENT OF THE WIDTH OF THE ENTRY AREA OF AN UPLAND CONNECTION ALONG EACH SIDE OF THE CENTERLINE OF SUCH ENTRY AREA; AND	N/A	N/A	N/A
62-651 (d)(3)	**FENCES AND WALLS**	**(D)(3)** AT LEAST 50 PERCENT OF THE WIDTH OF THE SHORE PUBLIC WALKWAY CLOSEST TO THE SHORELINE.	N/A	N/A	N/A



OWNER
KENT MEMBER LLC
505 FLUSHING AVE, BROOKLYN, NY 11205

CIVIL / PARKING ENGINEER
PHILIB HABIB AND ASSOCIATES
102 MADISON AVE # 11, NEW YORK, NY 10016

LANDSCAPE ARCHITECT
MPFP
120 BROADWAY 20TH FL, NEW YORK, NY 10271

LIGHTING DESIGNER
ONE LUX STUDIO
158 WEST 29TH STREET, FL 10, NEW YORK, NY 10001

LAND USE CONSULTANT
HERRICK FEINSTEIN LLP
TWO PARK AVENUE. NEW YORK, NY 10016

REV	DATE	DESCRIPTION
	3/24/2021	ULURP SUBMISSION
	11/03/2021	ULURP SUBMISSION
	06/22/2022	ULURP SUBMISSION
	09/08/2022	ULURP SUBMISSION
	01/11/2023	DPR REVIEW
	03/22/2023	ULURP SUBMISSION
	07/14/2023	ULURP SUBMISSION
	10/2/2023	ULURP SUBMISSION
	10/20/23	ULURP SUBMISSION

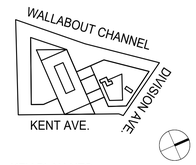

KEY PLAN:NTS

500 KENT

500 KENT AVENUE
BROOKLYN, NY 11249

ID #2019K0330

WATERFRONT PUBLIC ACCESS AREA ZONING CALCULATIONS

SCALE:

DRAWING #:
Z-04.00

ZONING SECTION	ITEM	ZONING RESOLUTION REQUIREMENT	PROVIDED	COMPLIANCE	DWG REF
62-652	**SEATING**				
62-652 (a)	**SEATING WITH BACKS**	**(A)** AT LEAST 50 PERCENT OF THE REQUIRED SEATING SHALL HAVE BACKS, AND AT LEAST 50 PERCENT OF SUCH SEATING SHALL FACE IN THE GENERAL DIRECTION OF THE WATER. SEAT BACKS SHALL BE AT LEAST 14 INCHES HIGH. WALLS LOCATED ADJACENT TO A SEATING SURFACE SHALL NOT COUNT AS SEAT BACKS. ALL SEAT BACKS MUST EITHER BE CONTOURED IN FORM FOR COMFORT OR SHALL BE RECLINED FROM THE VERTICAL BETWEEN 10 TO 15 DEGREES. **REQUIRED:** **TOTAL SEATING: 23,050 SF / 75 SF = 307.33 LF SEATING REQUIRED** **TOTAL BACKED SEATING: 307.33 LF X 50% = 153.66 LF BACKED SEATING REQUIRED** **TOTAL BACKED SEATING FACING THE WATER: 307.33 LF X 50% = 153.66 LF BACKED SEATING FACING WATER REQUIRED**	PROVIDED: TOTAL SEATING: 378.68 LF SEATING PROVIDED TOTAL BACKED SEATING: 165.81 LF BACKED SEATING PROVIDED TOTAL BACKED SEATING FACING THE WATER: 113.99 LF SEATING FACING THE WATER PROVIDED	COMPLIES	L-402.00
62-652 (b)	**DEPTH**	**(B)** SEATING WITH OR WITHOUT BACKS SHALL HAVE A DEPTH OF NOT LESS THAN 18 INCHES, AND FOR SEATING WITH BACKS, SUCH DEPTH SHALL NOT BE GREATER THAN 20 INCHES. SEATING WITH A DEPTH OF AT LEAST 36 INCHES, AND ACCESSIBLE FROM BOTH SIDES, MAY BE CREDITED AS DOUBLE SEATING. WHEN SEATING IS PROVIDED ON A PLANTER LEDGE, SUCH LEDGE MUST HAVE A MINIMUM DEPTH OF 22 INCHES. **REQUIRED:** **REQUIRED SEATING DEPTH: MINIMUM 18" AND MAXIMUM 20" FOR SEATING WITH BACKS** **REQUIRED SEATING DEPTH AT PLANTER LEDGE: MINIMUM 22" DEPTH**	PROVIDED: PROVIDED SEATING DEPTH: 18" SEAT DEPTH FOR SEATING WITH BACKS AND 22" DEPTH MAXIMUM FOR BACKLESS SEATING NO PLANTER LEDGE SEATING PROVIDED	COMPLIES	L-402.00
62-652 (c)	**HEIGHT**	**(C)** AT LEAST 75 PERCENT OF THE REQUIRED SEATING SHALL HAVE A HEIGHT NOT LESS THAN 16 INCHES NOR GREATER THAN 20 INCHES ABOVE THE LEVEL OF THE ADJACENT GRADE. SEATING HIGHER THAN 36 INCHES OR LOWER THAN 12 INCHES SHALL NOT QUALIFY TOWARD THE SEATING REQUIREMENTS. SEATING MAY BE MOUNTED ON A SOLID CURB NOT HIGHER THAN SIX INCHES. **REQUIRED:** **REQUIRED SEATING HEIGHT: 307.33 LF X 75% = 230.49 LF REQUIRED SEATING WITH A MINIMUM HEIGHT OF 16" AND MAXIMUM HEIGHT 20" ABOVE LEVEL OF ADJACENT GRADE**	PROVIDED: PROVIDED SEATING HEIGHT: 16" TO 20" ABOVE ADJACENT GRADE	COMPLIES	L-603.00
62-652 (d)	**CLEARANCE**	**(D)** SEATING SHALL BE LOCATED A MINIMUM OF 22 INCHES FROM ANY CIRCULATION PATH OR PERMITTED OBSTRUCTION ALONG THE ACCESSIBLE SIDE OF SUCH SEATING, EXCEPT THAT SEATING WITHOUT BACKS MAY BE AS CLOSE TO A GUARDRAIL AS 12 IN.	ALL SEATING PROVIDES A MINIMUM 22 INCH CLEARANCE FROM CIRCULATION PATHS AND PERMITTED OBSTRUCTIONS	COMPLIES	L-401.00
62-652 (e)	**REQUIRED SEATING**	**(E)** IN SHORE PUBLIC WALKWAYS AND SUPPLEMENTAL PUBLIC ACCESS AREAS, AT LEAST TWO OF THE FOLLOWING TYPES OF SEATING ARE REQUIRED: MOVEABLE SEATING, FIXED INDIVIDUAL SEATS, FIXED BENCHES WITH BACKS, FIXED BENCHES WITHOUT BACKS, LOUNGING CHAIRS AND DESIGN FEATURE SEATING.	FIXED BACKED BENCHES, FIXED BACKLESS BENCHES, MOVEABLE CHAIRS, LOUNGE CHAIRS, SEATING STEPS, AND SEATING PODS PROVIDED	COMPLIES	L-402.00
62-652 (e)(1)	**PLANTER LEDGE SEATING, SEATING WALLS, AND SEATING STEPS**	**(E)(1)** PLANTER LEDGES, SEATING WALLS, AND SEATING STEPS MAY BE PROVIDED, AND SHALL BE LIMITED TO 25 PERCENT OF THE REQUIRED SEATING. WALLS AND PLANTER LEDGES SHALL BE FLAT AND SMOOTH WITH AT LEAST ONE INCH RADIUS ROUNDED EDGES. **REQUIRED:** **307.33 LF REQUIRED SEATING X 25% = 76.83 MAXIMUM LF SEATING TO BE SEATING STEPS** **SEATING SHALL BE FLAT, SMOOTH, AND A MINIMUM 1" RADIUS ROUNDED EDGE**	PROVIDED: 49.49 LF (16% OF REQUIRED SEATING) PROVIDED SEATING STEPS ALL SEATING STEPS PROVIDED ARE FLAT, SMOOTH, AND HAVE A MINIMUM 1" RADIUS ROUNDED EDGE	COMPLIES COMPLIES	L-603.00
62-652 (e)(2)	**MOVEABLE SEATING**	**(E)(2)** MOVEABLE CHAIRS, EXCLUDING THOSE IN OPEN AIR CAFES, MAY BE CREDITED AS 18 INCHES OF LINEAR SEATING PER CHAIR; HOWEVER, NOT MORE THAN 50 PERCENT OF REQUIRED LINEAR SEATING MAY BE IN MOVEABLE CHAIRS. MOVEABLE CHAIRS MAY BE PLACED IN STORAGE OUTSIDE OF THE REQUIRED HOURS OF OPERATION, PURSUANT TO SECTION 62-71, PARAGRAPH (A). ALL MOVEABLE CHAIRS MUST HAVE BACKS. MOVEABLE CHAIRS SHALL NOT BE CHAINED, FIXED, OR OTHERWISE SECURED WHILE THE WATERFRONT PUBLIC ACCESS AREA IS OPEN TO THE PUBLIC. **REQUIRED:** **307.33 LF REQUIRED SEATING X 50% = 153.66 LF MAXIMUM SEATING TO MOVEABLE CHAIRS** **MOVEABLE CHAIRS MUST HAVE BACKS AND SHALL NOT BE CHAINED, FIXED, OR OTHERWISE SECURED**	PROVIDED: 49.5 LF (16% OF REQUIRED SEATING) MOVEABLE CHAIRS PROVIDED ALL PROVIDED MOVEABLE SEATING HAS BACKS AND SHALL NOT BE CHAINED, FIXED, OR OTHERWISE SECURED	COMPLIES COMPLIES	L-402.00
62-652 (e)(3)	**SEATING STEPS**	**(E)(3)** SEATING STEPS SHALL NOT INCLUDE ANY STEPS INTENDED FOR CIRCULATION AND MUST HAVE A HEIGHT NOT LESS THAN 12 INCHES NOR GREATER THAN 30 INCHES AND A DEPTH NOT LESS THAN 18 INCHES.	ALL PROVIDED SEATING STEPS ARE NOT INTENDED FOR CIRCULATION AND HAVE A HEIGHT OF 12" AND A DEPTH OF 22"	COMPLIES	L-600.00
62-652 (e)(4)	**LOUNGE SEATING**	**(E)(4)** LOUNGE CHAIRS SHALL ALLOW FOR A RECLINED POSITION SUPPORTING THE BACK AS WELL AS THE LEGS. LOUNGE CHAIRS MAY BE CREDITED AS 36 INCHES OF LINEAR SEATING PER CHAIR.	24 LF LOUNGE CHAIRS PROVIDED ALL PROVIDED LOUNGE CHAIRS ALLOW FOR A RECLINED POSITION (110 DEGREES) SUPPORTING THE BACK AND HAVE LEGS	COMPLIES	L-603.00
62-652 (f)	**SOCIAL SEATING**	**(F)** AT LEAST 25 PERCENT OF REQUIRED SEATING SHALL BE SOCIAL SEATING, CONSISTING OF SEATS THAT ARE PLACED IN CLOSE PROXIMITY AND AT ANGLES TO ONE ANOTHER OR IN FACING CONFIGURATIONS THAT FACILITATE SOCIAL INTERACTION. A MINIMUM OF TWO SQUARE FEET OF TABLES SHALL BE REQUIRED FOR EVERY THREE LINEAR FEET OF SOCIAL SEATING. HOWEVER, ANY REQUIREMENT FOR TABLES THAT, IN TOTAL, IS LESS THAN 10 SQUARE FEET SHALL BE WAIVED, AND NO MORE THAN 150 SQUARE FEET OF TABLES SHALL BE REQUIRED IN ANY SITE. **REQUIRED:** **TOTAL REQUIRED SOCIAL SEATING: 307.33 LF REQUIRED SEATING X 25% = 76.83 LF REQUIRED SOCIAL SEATING** **TOTAL REQUIRED TABLES: (76.25 LF / 3) X 2 SF = 50.83 SF REQUIRED TABLES**	PROVIDED: TOTAL PROVIDED SOCIAL SEATING: 77.50 LF SOCIAL SEATING TOTAL PROVIDED TABLES: 55 SF TABLES	COMPLIES	L-402.00
62-652 (g)	**SHADED SEATING**	**(G)** AT LEAST 20 PERCENT OF REQUIRED SEATING SHALL BE SHADED. SEATING SHALL BE CONSIDERED SHADED IF IT IS LOCATED UNDER A CANOPY TREE OR SHADE STRUCTURE, OR ON THE EASTERN SIDE AND WITHIN 45 FEET OF THE TRUNK OF A CANOPY TREE OR OF A SHADE STRUCTURE. **REQUIRED:** **TOTAL REQUIRED SHADED SEATING: 307.33 LF REQUIRED SEATING X 20% = 61.46 LF REQUIRED SHADED SEATING**	PROVIDED: TOTAL PROVIDED SHADED SEATING: 230.18 LF SHADED SEATING	COMPLIES	L-402.00
62-652 (h)	**SEAWARD SEATING**	**(H)** UP TO 25 PERCENT OF REQUIRED SEATING MAY BE LOCATED SEAWARD OF THE SHORE PUBLIC WALKWAY PROVIDED IT IS DESIGNED AS:	N/A	N/A	
62-653	**LIGHTING**				
62-653	**LIGHTING**	ALL WATERFRONT PUBLIC ACCESS AREAS SHALL PROVIDE LIGHTING IN ACCORDANCE WITH THE FOLLOWING REQUIREMENTS: AN AVERAGE MAINTAINED LEVEL OF ILLUMINATION OF NOT LESS THAN ONE HORIZONTAL FOOT CANDLE (LUMENS PER FOOT) THROUGHOUT ALL WALKABLE AREAS, AND A MINIMUM LEVEL OF ILLUMINATION OF NOT LESS THAN 0.2 HORIZONTAL FOOT CANDLES (LUMENS PER FOOT) THROUGHOUT ALL OTHER AREAS, SHALL BE REQUIRED. SUCH LEVEL OF ILLUMINATION SHALL BE MAINTAINED FROM ONE-HALF HOUR BEFORE SUNSET TO ONE-HALF HOUR AFTER SUNRISE. **REQUIRED:** **AN AVERAGE LEVEL OF ILLUMINATION OF AT LEAST 1 HORIZONTAL FOOT CANDLE THROUGH WALKABLE AREAS** **AN AVERAGE LEVEL OF ILLUMINATION OF AT LEAST 0.2 HORIZONTAL FOOT CANDLES THROUGHOUT ALL OTHERS AREAS** THE AVERAGE ILLUMINATION TO MINIMUM FOOT CANDLE UNIFORMITY RATIO SHALL BE NO GREATER THAN 10:1 WITHIN A WATERFRONT PUBLIC ACCESS AREA. **REQUIRED:** **THE AVERAGE ILLUMINATION TO MINIIMUM FC UNIFORMITY RATIO SHALL BE LESS THAN 10:1** GLARE SHALL BE CONTROLLED TO A SEMI-CUTOFF STANDARD (NOT MORE THAN FIVE PERCENT OF PEAK FOOT CANDLE INTENSITY RADIATING ABOVE 90 DEGREES AND 20 PERCENT OF PEAK INTENSITY ABOVE 80 DEGREES). THE LUMINAIRE SHALL BE EQUIPPED WITH LAMPS WITH A COLOR TEMPERATURE RANGE OF 3000 K TO 4100 K WITH A MINIMUM COLOR RENDERING INDEX OF 65. ALL LENSES AND GLOBES SHALL BE POLYCARBONATE OR EQUIVALENT. ALL LIGHTING SOURCES THAT ILLUMINATE A WATERFRONT PUBLIC ACCESS AREA AND ARE MOUNTED ON OR LOCATED WITHIN BUILDINGS ADJACENT TO THE WATERFRONT PUBLIC ACCESS AREA SHALL BE SHIELDED FROM DIRECT VIEW. IN ADDITION, ALL LIGHTING WITHIN THE WATERFRONT PUBLIC ACCESS AREA SHALL BE SHIELDED TO MINIMIZE ANY ADVERSE EFFECT ON SURROUNDING BUILDINGS CONTAINING RESIDENCES.	PROVIDED: AVERAGE LEVEL OF ILLUMINATION IN WALKABLE AREAS: 2.26 FC AVERAGE LEVEL OF ILLUMINATION IN OTHER AREAS: 1.93 FC PROVIDED: AVERAGE ILLUMINATION TO MINIMUM FC UNIFORMITY RATIO IN WALKABLE AREAS: 7.77:1 AVERAGE ILLUMINATION TO MINIMUM FC UNIFORMITY RATIO IN OTHER AREAS: 7.54:1 CITY STANDARD LIGHT POLE PROVIDED	COMPLIES COMPLIES COMPLIES	L-403.00
62-654	**SIGNAGE**				
62-654	**SIGNAGE**	THE PROVISIONS OF THIS SECTION SHALL APPLY TO SIGNS REQUIRED IN WATERFRONT PUBLIC ACCESS AREAS. ALL SUCH SIGNS SHALL BE LOCATED IN DIRECTLY VISIBLE LOCATIONS, WITHOUT ANY OBSTRUCTION AT ANY TIME. SUCH SIGNS SHALL BE FULLY OPAQUE, NON-REFLECTIVE AND CONSTRUCTED OF PERMANENT, HIGHLY DURABLE MATERIALS, SUCH AS METAL OR STONE. ALL LETTERING SHALL BE IN A CLEAR, SANS-SERIF, NON-NARROW FONT SUCH AS ARIAL, HELVETICA, OR VERDANA, SOLID IN COLOR WITH A MINIMUM HEIGHT OF ONE-QUARTER INCH, UNLESS OTHERWISE SPECIFIED IN THIS SECTION, AND SHALL HIGHLY CONTRAST WITH THE BACKGROUND COLOR. DRAWINGS DOCUMENTING THE SIZE, FORMAT, AND ORIENTATION OF ALL REQUIRED SIGNS SHALL BE INCLUDED IN THE APPLICATION FOR CERTIFICATION, PURSUANT TO SECTION 62-80. SUCH DRAWINGS SHALL INCLUDE DETAILED INFORMATION ABOUT DIMENSIONS OF THE SIGN, LETTERING SIZE, COLOR AND MATERIALS.	ALL PROVIDED SIGNS ARE LOCATED IN VISIBLE LOCATIONS, ARE FULLY OPAQUE, NON-REFLECTIVE, AND MADE OF METAL MATERIAL. ALL LETTERING SHALL BE ARIAL WITH A MINIMUM HEIGHT OF ¼" AND SHALL CONTRAST WITH BACKGROUND COLOR OF SIGN.	COMPLIES	L-602.00
62-654 (a)(1)	**ENTRY SIGNAGE**	**(A)(1)** THE NEW YORK CITY WATERFRONT SYMBOL, 12 INCHES SQUARE IN DIMENSION, AS PROVIDED IN THE REQUIRED SIGNAGE SYMBOLS FILE AT THE DEPARTMENT OF CITY PLANNING WEBSITE AND THE "THE NEW YORK WATERFRONT SYMBOL STANDARDS AND SPECIFICATIONS" (PUBLISHED BY THE DEPARTMENT OF CITY PLANNING, APRIL 1989, AND AS MODIFIED FROM TIME TO TIME);	THE NEW YORK CITY WATERFRONT SYMBOL AT 12 INCHES SQUARE IN DIMENSION PROVIDED	COMPLIES	L-602.00
62-654 (a)(2)	**ENTRY SIGNAGE**	**(A)(2)** LETTERING AT LEAST ONE-AND ONE-HALF INCHES IN HEIGHT, STATING "OPEN TO PUBLIC" IN BOLD TYPE;	PROVIDED LETTERING STATING, "OPEN TO THE PUBLIC" IN BOLD SHALL BE AT LEAST 1½" IN HEIGHT	COMPLIES	L-602.00
62-654 (a)(3)	**ENTRY SIGNAGE**	**(A)(3)** LETTERING AT LEAST ONE-HALF INCH IN HEIGHT STATING THE APPROVED HOURS OF OPERATION AS REQUIRED PURSUANT TO SECTION 62-71 (OPERATIONAL REQUIREMENTS), PARAGRAPH (A);	PROVIDED LETTERING STATING , "6AM TO 1AM" HOURS OF OPERATION IN BOLD SHALL BE AT LEAST 1½" IN HEIGHT	COMPLIES	L-602.00
62-654 (a)(4)	**ENTRY SIGNAGE**	**(A)(4)** LETTERING AT LEAST ONE-HALF INCH IN HEIGHT STATING "DO NOT ENTER OUTSIDE OF HOURS OF OPERATION";	PROVIDED LETTERING STATING , "DO NOT ENTER OUTSIDE HOURS OF OPERATION" IN BOLD SHALL BE AT LEAST 1½" IN HEIGHT	COMPLIES	L-602.00
62-654 (a)(5)	**ENTRY SIGNAGE**	**(A)(5)** THE INTERNATIONAL SYMBOL OF ACCESS FOR PERSONS WITH PHYSICAL DISABILITIES, AT LEAST THREE INCHES SQUARE, OR THE STATEMENT: "THIS PUBLIC ACCESS AREA IS ACCESSIBLE TO PERSONS WITH PHYSICAL DISABILITIES";	INTERNATIONAL SYMBOL OF ACCESS FOR PERSONS WITH PHYSICAL DISABILITIES AT 3 INCHES SQUARE PROVIDED	COMPLIES	L-602.00
62-654 (a)(6)	**ENTRY SIGNAGE**	**(A)(6)** THE ADDRESS OF THE PROPERTY WHERE THE WATERFRONT PUBLIC ACCESS AREA IS LOCATED;	PROPERTY ADDRESS OF THE WATERFRONT PUBLIC ACCESS AREA PROVIDED	COMPLIES	L-602.00
62-654 (a)(7)	**ENTRY SIGNAGE**	**(A)(7)** THE NAME OF THE CURRENT OWNER AND THE NAME, PHONE NUMBER AND EMAIL ADDRESS OF THE PERSON DESIGNATED TO MAINTAIN THE WATERFRONT PUBLIC ACCESS AREA;	THE NAME OF THE CURRENT OWNER AND CONTACT INFORMATION FOR THE PERSON DESIGNATED TO MAINTAIN THE WPAA PROVIDED	COMPLIES	L-602.00
62-654 (a)(8)	**ENTRY SIGNAGE**	**(A)(8)** THE STATEMENT: "FOR COMPLAINTS OR QUESTIONS: CALL 311";	THE STATEMENT: "FOR COMPLAINTS OR QUESTIONS: CALL 311" PROVIDED	COMPLIES	L-602.00
62-654 (a)(9)	**ENTRY SIGNAGE**	**(A)(9)** THE STATEMENT: "FOR MORE INFORMATION GO TO HTTP://NYC.GOV/PLANNING"; AND	THE STATEMENT: "FOR MORE INFORMATION GO TO HTTP://NYC.GOV/PLANNING" PROVIDED	COMPLIES	L-602.00



OWNER
KENT MEMBER LLC
505 FLUSHING AVE, BROOKLYN, NY 11205

CIVIL / PARKING ENGINEER
PHILIB HABIB AND ASSOCIATES
102 MADISON AVE # 11, NEW YORK, NY 10016

LANDSCAPE ARCHITECT
MPFP
120 BROADWAY 20TH FL, NEW YORK, NY 10271

LIGHTING DESIGNER
ONE LUX STUDIO
158 WEST 29TH STREET, FL 10, NEW YORK, NY 10001

LAND USE CONSULTANT
HERRICK FEINSTEIN LLP
TWO PARK AVENUE. NEW YORK, NY 10016

REV	DATE	DESCRIPTION
	3/24/2021	ULURP SUBMISSION
	11/03/2021	ULURP SUBMISSION
	06/22/2022	ULURP SUBMISSION
	09/08/2022	ULURP SUBMISSION
	01/11/2023	DPR REVIEW
	03/22/2023	ULURP SUBMISSION
	07/14/2023	ULURP SUBMISSION
	10/2/2023	ULURP SUBMISSION
	10/20/23	ULURP SUBMISSION

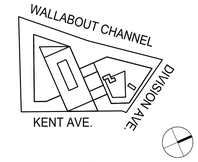

KEY PLAN:NTS

500 KENT

500 KENT AVENUE
BROOKLYN, NY 11249
ID #2019K0330

WATERFRONT PUBLIC ACCESS AREA ZONING CALCULATIONS

SCALE:

DRAWING #:
Z-05.00

ZONING SECTION	ITEM	ZONING RESOLUTION REQUIREMENT	PROVIDED	COMPLIANCE	DWG REF
62-654 (a)(10)	**ENTRY SIGNAGE**	**(A)(10)** RULES OF CONDUCT AS SPECIFIED IN SECTION 62-71, PARAGRAPH (B).	RULES OF CONDUCT AS SPECIFIED IN SECTION 62-71, PARAGRAPH (B) PROVIDED	COMPLIES	L-602.00
62-654 (b)	**SIGNAGE AT ZONING LOT LINE**	**(B)** A SIGN SHALL BE REQUIRED TO BE LOCATED WITHIN FIVE FEET OF ANY ZONING LOT LINE ADJACENT TO ANOTHER ZONING LOT WITHIN A SHORE PUBLIC WALKWAY AND AT A DISTANCE NO GREATER THAN FIVE FEET FROM THE REQUIRED CIRCULATION PATH. ALL INFORMATION REQUIRED IN PARAGRAPH (A) OF THIS SECTION SHALL BE INCLUDED ON SIGNS WITH A MAXIMUM DIMENSION IN ONE DIRECTION OF 16 INCHES. THE MAXIMUM HEIGHT OF A SIGN ABOVE ADJOINING GRADE SHALL BE THREE FEET. THE BOTTOM OF ALL SIGNS SHALL BE AT LEAST 18 INCHES ABOVE ADJOINING GRADE, EXCEPT FOR SIGNS ANGLED 45 DEGREES OR LESS, AS MEASURED FROM ADJACENT GRADE. HOWEVER, THE WATERFRONT SYMBOL REQUIRED PURSUANT TO PARAGRAPH (A)(1) OF THIS SECTION NEED NOT BE INCLUDED IN SUCH SIGNAGE IF SUCH SYMBOL IS INSCRIBED NEARBY IN PAVEMENT OR ANY APPROPRIATE AMENITY, SUCH AS A SEATING WALL OR SCULPTURE. HOWEVER, THE WATERFRONT SYMBOL REQUIRED PURSUANT TO PARAGRAPH (A)(1) SHALL BE NO LARGER THAN FOUR INCHES SQUARE, OR 12 INCHES SQUARE IF INSCRIBED IN PAVEMENT OR ANY APPROPRIATE AMENITY, AND THE INFORMATION REQUIRED IN PARAGRAPH (A)(2) OF THIS SECTION SHALL BE ONE INCH HIGH. THE INFORMATION REQUIRED IN PARAGRAPHS (A)(1) AND (A)(2) MAY BE INSCRIBED IN PAVEMENT OR ON ANY PERMITTED APPROPRIATE AMENITY.	PROVIDED SIGNS SHALL BE LOCATED WITHIN 5 FEET OF ANY ZONING LOT LINE ADJACENT TO ANOTHER ZONING LOT WITHIN A SHORE PUBLIC WALKWAY AND NO FURTHER THAN 5 FEET FROM THE REQUIRED CIRCULATION PATH.	COMPLIES	L-602.00
62-654 (c)	**OTHER SIGNAGE**	**(C)** SEATING AREAS WITHIN WATERFRONT PUBLIC ACCESS AREAS ALLOWED PURSUANT TO PARAGRAPH (B) OF SECTION 62-62 (DESIGN REQUIREMENTS FOR SHORE PUBLIC WALKWAYS AND SUPPLEMENTAL PUBLIC ACCESS AREAS) SHALL BE IDENTIFIED BY A SIGN WITH THE WORDS "SEATING OPEN TO PUBLIC" IN LETTERING AT LEAST ONE INCH HIGH. SUCH SIGN SHALL BE CLEARLY VISIBLE FROM THE WATERFRONT PUBLIC ACCESS AREA. IN ADDITION, SUCH SIGN SHALL BE NO GREATER THAN 60 SQUARE INCHES, NO HIGHER THAN 18 INCHES ABOVE ADJACENT GRADE, AND ANGLED FOR VISIBILITY. THE REQUIRED SIGN MAY BE FREESTANDING OR ATTACHED TO A PERMITTED AMENITY WITHIN THE WATERFRONT PUBLIC ACCESS AREA. NO ADVERTISING SIGNS MAY BE LOCATED WITHIN A WATERFRONT PUBLIC ACCESS AREA.	PROVIDED SEATING AREAS WITHIN WATERFRONT PUBLIC ACCESS AREAS ARE IDENTIFIED BY A MARINE GRADE STAINLESS STEEL #304 SIGN WITH THE WORDS "SEATING OPEN TO PUBLIC" IN LETTERING AT LEAST ONE INCH HIGH. PROVIDED SIGNS ARE VISIBLE FROM THE WATERFRONT PUBLIC ACCESS AREA AND ARE 54 SQUARE INCHES, 12 INCHES ABOVE THE ADJACENT GRADE, AND ANGLED (135$\frac{1}{2}$ DEGREES) FOR VISIBILITY. 2 FREESTANDING SEATING SIGNS PROVIDED (1 WITHIN SHORE PUBLIC WALKWAY AND 1 WITHIN SPAA) BOTH ADJACENT TO ENTRY SIGNAGE	COMPLIES	L-602.00
62-655	**PLANTING AND TREES**				
62-655	**PLANTING AND TREES**	A DETAILED LANDSCAPE PLAN PREPARED BY A REGISTERED LANDSCAPE ARCHITECT SHALL BE SUBMITTED TO THE DEPARTMENT OF PARKS AND RECREATION PRIOR TO SEEKING CERTIFICATION BY THE CHAIRPERSON OF THE CITY PLANNING COMMISSION, PURSUANT TO THE REQUIREMENTS OF SECTION 62-80. SUCH PLANS SHALL INCLUDE PLANTS SUITED FOR WATERFRONT CONDITIONS AND INCLUDE A DIVERSITY OF SPECIES WITH EMPHASIS ON NATIVE PLANTS, SPECIES THAT ARE TOLERANT OF SALT, SEDIMENT, HIGH SEASONAL WATER FLOW, AND HIGH WINDS, AS APPLICABLE TO THE LOCATION AND THE FACILITATION OF SUSTAINABLE WILDLIFE HABITATS, WHERE APPROPRIATE. NO SPECIES LISTED ON QUARANTINE OR AS A HOST SPECIES FOR ANY DISEASE LISTED BY THE DEPARTMENT OF PARKS AND RECREATION AT THE TIME OF APPLICATION SHALL BE INCLUDED. ALL LANDSCAPED AREAS SHALL CONTAIN A BUILT-IN IRRIGATION SYSTEM OR CONTAIN HOSE BIBS WITHIN 100 FEET OF ALL PLANTING AREAS.	ALL PROPOSED PLANTING SELECTIONS ARE SUITED FOR WATERFRONT CONDITIONS. ALL LANDSCAPED AREAS SHALL BE IRRIGATED	COMPLIES COMPLIES	L-301.00 L-300.00
62-655 (a)	**PLANTING AREAS**	**(A)** WHEREVER A MINIMUM PERCENTAGE OF PLANTING AREA IS SPECIFIED FOR A WATERFRONT PUBLIC ACCESS AREA, SUCH REQUIREMENTS SHALL BE MET ONLY THROUGH THE PROVISIONS OF THE TYPES OF PLANTING AREAS LISTED IN PARAGRAPHS (A)(1) THROUGH (A)(8) OF THIS SECTION. A CURB WITH A MAXIMUM HEIGHT OF SIX INCHES IS PERMITTED ALONG THE PERIMETER OF ANY PLANTING AREA. ANY EDGING HIGHER THAN SIX INCHES ABOVE ADJACENT GRADE SHALL BE CONSIDERED A RETAINING WALL. RETAINING WALLS SHALL NOT EXCEED A MAXIMUM HEIGHT OF THREE FEET, AS MEASURED FROM THE LEVEL OF THE ADJOINING GRADE OR PLANTED AREA BELOW SUCH WALL SO THAT NO MORE THAN THREE FEET OF SUCH RETAINING WALL IS VISIBLE FROM THE WATERFRONT PUBLIC ACCESS AREAS. WHERE NOT SPECIFICALLY INDICATED, THE MINIMUM PLANTING STANDARD FOR REQUIRED PLANTING AREAS SHALL BE TURF GRASS, OTHER NATURAL GRASSES OR GROUNDCOVER. ALL PLANTING AREAS SHALL BE LOCATED ON UNDISTURBED SUBSOIL OR CLEAN FILL.	STEEL EDGE PROVIDED FLUSH-TO-GRADE ALONG THE PERIMETER OF PLANTING AREAS PROVIDED RETAINING WALLS DO NOT EXCEED MAXIMUM HEIGHT OF THREE FEET AS MEASURED FROM THE ADJACENT GRADE OR PLANTING AREA	COMPLIES	L-601.00
62-655 (a)(1)	**SINGLE TREE PIT**	**(A)(1)** A SINGLE TREE PIT SHALL HAVE A MINIMUM DIMENSION OF FIVE FEET WITH A MINIMUM AREA OF 30 SQUARE FEET AND A MINIMUM DEPTH OF 3 FEET, 6 INCHES. ONLY TREE PITS PLANTED WITH GROUND COVER SHALL COUNT TOWARDS MEETING A MINIMUM PLANTING AREA REQUIREMENT.	ALL SINGLE TREE PITS HAVE A MINIMUM DIMENSIONS 5'-0" AND PLANTING DEPTHS AREA MINIMUM OF 3'-6" AND HAVE A MINIMUM AREA OF 30 SQUARE FEET FOR EACH TREE	COMPLIES	L-601.00
62-655 (a)(2)	**CONTINUOUS TREE PITS**	**(A)(2)** A CONTINUOUS TREE PIT IS A PLANTING AREA CONTAINING TWO OR MORE TREES. CONTINUOUS TREE PITS SHALL HAVE A MINIMUM WIDTH OF FIVE FEET AND A MINIMUM DEPTH OF 3 FEET, 6 INCHES, AND A LENGTH AS REQUIRED TO MEET A MINIMUM OF FIVE FEET FROM THE TRUNK OF THE TREE TO THE END OF THE TREE PIT.	ALL CONTINUOUS TREE PITS HAVE A MINIMUM DIMENSIONS 5'-0" AND PLANTING DEPTHS AREA MINIMUM OF 3'-6" AND HAVE A MINIMUM AREA OF 30 SQUARE FEET FOR EACH TREE	COMPLIES	L-601.00
62-655 (a)(3)	**PLANTING BEDS**	**(A)(3)** PLANTING BEDS FOR TURF GRASS OR GROUNDCOVERS SHALL HAVE MINIMUM DIMENSIONS OF TWO FEET IN ANY DIRECTION AND A MINIMUM DEPTH OF TWO FEET. PLANTING BEDS FOR SHRUBS SHALL HAVE MINIMUM DIMENSIONS OF THREE FEET BY THREE FEET FOR EACH SHRUB AND A MINIMUM DEPTH OF 2 FEET, 6 INCHES. PLANTING BEDS CONTAINING TREES SHALL HAVE A MINIMUM DIMENSION OF FIVE FEET AND A MINIMUM AREA OF 30 SQUARE FEET FOR EACH TREE, WITH A MINIMUM DEPTH OF 3 FEET, 6 INCHES. TREES, SHRUBS OR GROUNDCOVERS MAY BE COMBINED IN A SINGLE PLANTING BED ONLY IF SUCH BED MEETS THE MINIMUM DEPTH REQUIRED FOR THE LARGEST PLANT. RETAINING WALLS ARE PERMITTED ALONG THE PERIMETER OF A PLANTING BED IN ACCORDANCE WITH THE REGULATIONS FOR PLANTING AREAS IN PARAGRAPH (A) OF THIS SECTION. **REQUIRED:** **MINIMUM REQUIRED DEPTH FOR GROUNDCOVER: 2'-0" DEPTH** **MINIMUM REQUIRED DEPTH FOR SHRUBS: 2'-6" DEPTH** **MINIMUM REQUIRED DEPTH FOR TREES: 3'-6" DEPTH**	PROVIDED: PROVIDED DEPTH FOR GROUNDCOVER: 2'-0" DEPTH PROVIDED DEPTH FOR SHRUBS: 2'-6" DEPTH PROVIDED DEPTH FOR TREES: 3'-6" DEPTH	COMPLIES	L-601.00
62-655 (a)(4)	**TERRACED PLANTING AREAS**	**(A)(4)** A "TERRACED PLANTING AREA" IS A PLANTING AREA WITH TWO OR MORE PLANTING BEDS INCORPORATING RETAINING WALLS ON A SLOPE WITH A GRADE CHANGE GREATER THAN OR EQUAL TO THREE FEET. A TERRACED PLANTING AREA SHALL COMPLY WITH THE DIMENSIONAL STANDARDS FOR A PLANTING BED EXCEPT THAT THE AVERAGE DEPTH OF THE INDIVIDUAL PLANTING BEDS BETWEEN THE TWO RETAINING WALLS SHALL NOT BE LESS THAN THREE FEET, AS MEASURED PERPENDICULAR TO THE EDGE OF THE RETAINING WALL. IN ADDITION, FOR RETAINING WALLS BETWEEN TWO OR MORE PLANTING BEDS, THEIR HEIGHT MAY EXCEED THREE FEET, PROVIDED THAT THE FRONT OF SUCH RETAINING WALLS IS SCREENED BY PLANT MATERIAL.	THE PROVIDED AVERAGE DEPTH OF SOIL BETWEEN TWO RETAINING WALLS IS NOT LESS THAN THREE FEET MEASURED PERPENDICULAR TO THE EDGE OF THE RETAINING WALL. ALL RETAINING WALLS BETWEEN TWO OR MORE PLANTING BEDS THAT EXCEED THREE FEET ARE SCREENED BY PLANT MATERIAL	COMPLIES	L-601.00
62-655 (a)(5)	**BERMS**	**(A)(5)** A "BERM" IS A PLANTING AREA WITH SLOPED GRADE STABILIZED PRIMARILY BY PLANT MATERIALS RATHER THAN RETAINING WALLS OR OTHER SIMILAR BUILT STRUCTURES. A BERM SHALL COMPLY WITH THE DIMENSIONAL STANDARDS FOR A PLANTING BED EXCEPT THAT THE HEIGHT OF THE BERM SHALL NOT EXCEED THE FLOOD-RESISTANT CONSTRUCTION ELEVATION ON THE ZONING LOT, OR FIVE FEET ABOVE THE LOWEST ADJOINING GRADE OF THE WATERFRONT YARD ESTABLISHED PURSUANT TO SECTION 62-332, WHICHEVER IS HIGHER.	N/A	N/A	N/A
62-655 (a)(6)	**LAWNS**	**(A)(6)** "LAWN" IS AN AREA PLANTED WITH TURF GRASS HAVING A MINIMUM SOIL DEPTH OF 2 FEET, 6 INCHES. ALONG AT LEAST 60 PERCENT OF THE PERIMETER, A LAWN SHALL HAVE A GRADE LEVEL WITHIN SIX INCHES OF THE ADJACENT GRADE PROVIDING UNOBSTRUCTED PEDESTRIAN ACCESS. ANY REQUIRED LAWN SHALL HAVE A MINIMUM AREA OF 500 SQUARE FEET AND NO DIMENSION LESS THAN 18 FEET.	ALL PROVIDED LAWNS HAVE A MINIMUM SOIL DEPTH OF 2'-6" OR GREATER AND ARE WITHIN 6 INCHES OF THE ADJACENT GRADING, PROVIDING UNOBSTRUCTED PEDESTRIAN ACCESS ALL PROVIDED LAWNS HAVE A MINIMUM AREA OF 500 SQUARE FEET AND NO DIMENSION LESS THAN 18 FEET	COMPLIES	L-300.00
62-655 (a)(7)	**SCREENING**	**(A)(7)** SCREENING IS INTENDED TO CREATE A LANDSCAPED BUFFER BETWEEN THE WATERFRONT PUBLIC ACCESS AREAS AND ADJOINING NON-PUBLIC USES TO PROTECT THE PRIVACY OR MINIMIZE THE VISUAL IMPACT OF BLANK WALLS, EQUIPMENT, LOADING AND PARKING AREAS OR SIMILAR CONDITIONS.	N/A	N/A	N/A
62-655 (a)(7)(I)	**SCREENING BUFFERS**	**(A)(7)(I)** SCREENING BUFFERS REQUIRED PURSUANT TO PARAGRAPH (C)(2) OF SECTION 62-62 (DESIGN REQUIREMENTS FOR SHORE PUBLIC WALKWAYS AND SUPPLEMENTAL PUBLIC ACCESS AREAS) SHALL CONSIST OF DENSELY PLANTED SHRUBS OR MULTI-STEMMED SCREENING PLANTS, WITH AT LEAST 50 PERCENT BEING EVERGREEN SPECIES. SHRUBS SHALL HAVE A HEIGHT OF AT LEAST FOUR FEET AT THE TIME OF PLANTING. THE REQUIREMENTS OF THIS PARAGRAPH, (A)(7)(I), MAY ALSO BE SATISFIED BY THE REQUIREMENTS OF PARAGRAPH (A)(7)(II) OF THIS SECTION.	N/A	N/A	N/A
62-655 (a)(7)(II)	**BLANK WALLS AND SERVICE AREAS**	**(A)(7)(II)** BLANK WALLS HIGHER THAN FOUR FEET MEASURED FROM AN ADJACENT GRADE LEVEL AND SERVICE AREAS ANYWHERE WITHIN A WATERFRONT PUBLIC ACCESS AREA SHALL BE SCREENED WITH ANY COMBINATION OF EVERGREEN TREES, VINES OR ESPALIERED TREES OR SHRUBS, AND AN ARCHITECTURAL TREATMENT SUCH AS A PERGOLA, STONE RUSTICATION, GRILLS OR SCULPTURAL FEATURES.	N/A	N/A	N/A
62-655 (a)(7)(III)	**PARKING GARAGE SCREENING**	**(A)(7)(III)** OPEN PARKING AREAS ON ANY ZONING LOT FRONTING ON AN UPLAND CONNECTION OR STREET ON ANY WATERFRONT BLOCK, NOTWITHSTANDING THE USE ON SUCH LOT, SHALL REQUIRE SCREENING PURSUANT TO SECTION 37-921 (PERIMETER LANDSCAPING). SCREENING REQUIRED PURSUANT TO SECTION 62-453 SHALL CONSIST OF A PLANTING STRIP AT LEAST FOUR FEET WIDE. PLANTS SHALL BE AT LEAST FOUR FEET HIGH AT THE TIME OF PLANTING AND 50 PERCENT OF THEM SHALL BE EVERGREEN SHRUBS.	N/A	N/A	N/A
62-655 (b)(1)	**TREE CALIPER**	**(B)(1)** AT TIME OF PLANTING, CANOPY TREES SHALL BE A MINIMUM OF THREE INCHES CALIPER AND ORNAMENTAL TREES SHALL BE A MINIMUM OF TWO INCHES CALIPER.	ALL PROVIDED CANOPY TREES SHALL BE A 4-4$\frac{1}{2}$" CALIPER AT TIME OF PLANTING	COMPLIES	L-301.00
62-655 (b)(2)	**TREES IN SINGLE TREE PITS**	**(B)(2)** ONE OF THE PROCEDURES IN THIS PARAGRAPH, (B)(2), SHALL BE EMPLOYED TO PROTECT TREES PLANTED AT GRADE:	PROVIDED TREES PLANTED AT GRADE ARE PROTECTED	COMPLIES	L-300.00
62-655 (b)(2)(I)	**TREES IN SINGLE TREE PITS**	**(B)(2)(I)** GRANITE OR CAST CONCRETE BLOCK PAVERS WITH A MINIMUM FOUR INCH DEPTH SHALL BE INSTALLED IN ACCORDANCE WITH NEW YORK CITY DEPARTMENT OF PARKS AND RECREATION (DPR) STANDARDS FOR STREET TREES;	N/A	N/A	N/A
62-655 (b)(2)(II)	**TREES IN SINGLE TREE PITS**	**(B)(2)(II)** A GRATE SHALL BE INSTALLED OVER THE ROOT ZONE, SUPPORTED AT ITS EDGES AND SET FLUSH WITH THE ADJACENT PAVEMENT FOR PEDESTRIAN SAFETY, IN ACCORDANCE WITH DPR STANDARDS FOR STREET TREES FOR GRATE SIZE; OR	N/A	N/A	N/A
62-655 (b)(2)(III)	**TREES IN SINGLE TREE PITS**	**(B)(2)(III)** THE ROOT ZONE SHALL BE SURROUNDED WITH BARRIER HEDGE PLANTING.	PROVIDED TREES PLANTED AT GRADE SHALL BE BE PROTECTED BY PLANTING AROUND THE ROOT ZONE	COMPLIES	L-300.00
62-656	**PAVING**				
62-656(a)(1)	**PAVING WITHIN REQUIRED CIRCULATION PATHS**	**(A)(1)** ALL PAVING MATERIAL FOR A REQUIRED CIRCULATION PATH SHALL BE PERMANENT, DURABLE, ACCESSIBLE TO PERSONS WITH PHYSICAL DISABILITIES, AND SHALL CONSIST OF ONE OR A COMBINATION OF THE FOLLOWING:	PROVIDED PAVING MATERIAL WITHIN CIRCULATION PATHS ARE PERMANENT, DURABLE, AND ARE ACCESSIBLE TO PERSONS WITH DISABILITIES	COMPLIES	L-400.00
62-656(a)(1)(i)	**PAVING WITHIN REQUIRED CIRCULATION PATHS**	**(A)(1)(I)** UNIT PAVERS CONSTITUTED OF STONE, CONCRETE, GRANITE, ASPHALT OR A MIX OF THESE MATERIALS WITH OTHER AGGREGATES;	ASPHALT/PRECAST PAVERS PROVIDED	COMPLIES	L-400.00
62-656(a)(1)(ii)	**PAVING WITHIN REQUIRED CIRCULATION PATHS**	**(A)(1)(II)** CONCRETE, PREFABRICATED, POURED OR PERMEABLE;	N/A	N/A	N/A
62-656(a)(1)(iii)	**PAVING WITHIN REQUIRED CIRCULATION PATHS**	**(A)(1)(III)** WOOD PLANKS FOR BOARDWALK OR DECKING, EXCEPT THAT TROPICAL HARDWOOD SHALL NOT BE PERMITTED;	N/A	N/A	N/A



OWNER
KENT MEMBER LLC
505 FLUSHING AVE, BROOKLYN, NY 11205

CIVIL / PARKING ENGINEER
PHILIB HABIB AND ASSOCIATES
102 MADISON AVE # 11, NEW YORK, NY 10016

LANDSCAPE ARCHITECT
MPFP
120 BROADWAY 20TH FL, NEW YORK, NY 10271

LIGHTING DESIGNER
ONE LUX STUDIO
158 WEST 29TH STREET, FL 10, NEW YORK, NY 10001

LAND USE CONSULTANT
HERRICK FEINSTEIN LLP
TWO PARK AVENUE. NEW YORK, NY 10016

REV	DATE	DESCRIPTION
	3/24/2021	ULURP SUBMISSION
	11/03/2021	ULURP SUBMISSION
	06/22/2022	ULURP SUBMISSION
	09/08/2022	ULURP SUBMISSION
	01/11/2023	DPR REVIEW
	03/22/2023	ULURP SUBMISSION
	07/14/2023	ULURP SUBMISSION
	10/2/2023	ULURP SUBMISSION
	10/20/23	ULURP SUBMISSION

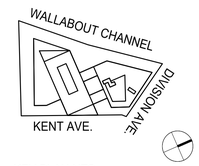

KEY PLAN:NTS

500 KENT

500 KENT AVENUE
BROOKLYN, NY 11249
ID #2019K0330

WATERFRONT PUBLIC ACCESS AREA ZONING CALCULATIONS

SCALE:

DRAWING #:
Z-06.00

ZONING SECTION	ITEM	ZONING RESOLUTION REQUIREMENT	PROVIDED	COMPLIANCE	DWG REF
62-656(a)(1)(iv)	**PAVING WITHIN REQUIRED CIRCULATION PATHS**	**(A)(1)(IV)** SOLID PLASTIC, SUCH AS "PLASTIC LUMBER," HIGH DENSITY POLYETHYLENE, WOOD COMPOSITE PLASTIC OR FIBER-REINFORCED PLASTIC.	N/A	N/A	N/A
62-656(a)(2)	**OTHER THAN WITHIN REQUIRED CIRCULATION**	**(A)(2)** IN ADDITION TO THE PERMITTED PAVING MATERIALS OF PARAGRAPH (A)(1) OF THIS SECTION, THE FOLLOWING MATERIALS SHALL BE PERMITTED ANYWHERE IN A WATERFRONT PUBLIC ACCESS AREA:	ASPHALT/PRECAST PAVERS PROVIDED AT WPAA. TINTED CONCRETE PAVING, AND VEHICULAR ASPHALT PROVIDED ON SITE	COMPLIES	L-400.00
62-656(a)(2)(i)	**OTHER THAN WITHIN REQUIRED CIRCULATION**	**(A)(2)(I)** BLOCKS SUCH AS BELGIAN BLOCKS, COBBLE STONES, CONCRETE COBBLES OR EUROCOBBLE;	N/A	N/A	N/A
62-656(a)(2)(ii)	**OTHER THAN WITHIN REQUIRED CIRCULATION**	**(A)(2)(II)** GRAVEL, LOOSE, INSTALLED OVER A SOLID SURFACE OR GLUED WITH RESIN;	N/A	N/A	N/A
62-656(a)(2)(iii)	**OTHER THAN WITHIN REQUIRED CIRCULATION**	**(A)(2)(III)** WOOD CHIPS OR OTHER SIMILAR MATERIAL;	N/A	N/A	N/A
62-656(a)(2)(iv)	**OTHER THAN WITHIN REQUIRED CIRCULATION**	**(A)(2)(IV)** METAL GRATING, LIMITED TO LOCATIONS THAT REQUIRE DRAINAGE AND FOR PLATFORMS;	N/A	N/A	N/A
62-656(a)(2)(v)	**OTHER THAN WITHIN REQUIRED CIRCULATION**	**(A)(2)(V)** ASPHALT, IMPERMEABLE OR POROUS, WHICH MAY BE IMPRINTED WITH THERMOPLASTIC PATTERNS.	VEHICULAR ASPHALT PROVIDED	COMPLIES	L-600.00
62-656(b)(1)	**DIMENSIONAL REQUIREMENTS**	**(B)(1)** ALL UNIT PAVERS SHALL HAVE A MINIMUM THICKNESS DIMENSION OF TWO INCHES FOR PEDESTRIAN USE AND THREE INCHES FOR VEHICULAR USE AND SHALL NOT EXCEED A MAXIMUM OF FOUR SQUARE FEET IN AREA.	ALL ASPHALT/PRECAST PAVERS ARE 3" THICK 6" WIDE AND 1'-0" LONG	COMPLIES	L-600.00
62-656(b)(2)	**DIMENSIONAL REQUIREMENTS**	**(B)(2)** WOOD PLANKS OR PLASTIC LUMBER FOR BOARDWALK OR DECKING SHALL BE A MINIMUM OF THREE INCHES THICK (NOMINAL DIMENSION). THE DIRECTION OF PLANKS SHALL NOT BE PARALLEL TO THE DIRECTION OF TRAFFIC.	N/A	N/A	N/A
62-656(b)(3)	**DIMENSIONAL REQUIREMENTS**	**(B)(3)** CONCRETE SLABS, OTHER THAN IN UPLAND CONNECTIONS, SHALL BE A MAXIMUM OF TWO FEET IN ANY ONE DIMENSION. ALL THE ABOVE MATERIALS MAY BE INSTALLED TO FACILITATE STORM WATER MANAGEMENT APPROPRIATE FOR SPECIFIC SITE CONDITIONS.	N/A	N/A	N/A
62-657	**BICYCLE RACKS**				
62-657	**BICYCLE RACKS**	EACH BICYCLE RACK SHALL ALLOW FOR THE BICYCLE FRAME AND ONE WHEEL TO BE LOCKED TO THE RACK. IF BICYCLES CAN BE LOCKED TO EACH SIDE OF THE RACK, EACH SIDE MAY BE COUNTED AS A REQUIRED SPACE. THIRTY INCHES OF MANEUVERABLE SPACE SHALL BE PROVIDED BETWEEN PARALLEL BICYCLE RACKS AND AN EIGHT FOOT WIDE AISLE SHALL BE PROVIDED BETWEEN BICYCLE RACK AREAS.	EACH BIKE RACK PROVIDES PARKING ON BOTH SIDES OF THE RACK WITH 30" OF MANEUVERABLE SPACE BETWEEN PARALLEL BIKE RACKS AND AN EIGHT FOOT WIDE MINIMUM AISLE WIDTH BETWEEN BIKE RACK AREAS	COMPLIES	L-602.00
62-658	**TRASH RECEPTACLES**				
62-658	**TRASH RECEPTACLES**	TRASH RECEPTACLES SHALL BE PLACED WITHIN 50 FEET OF A SEATING AREA, HAVE A MINIMUM CAPACITY OF 25 GALLONS AND HAVE EITHER TOP OPENINGS THAT MEASURE AT LEAST 12 INCHES WIDE OR SIDE OPENINGS THAT INSCRIBE A RECTANGLE MEASURING AT LEAST 12 INCHES WIDE AND SIX INCHES HIGH. TRASH RECEPTACLES SHALL BE ABLE TO USE STANDARD BAGS USED TO COLLECT TRASH.	TRASH RECEPTACLES ARE LOCATED WITHIN 50 FEET OF SEATING AREA AND HAVE A CAPACITY FOR 32 GALLONS WITH TOP OPENINGS THAT MEASURE AT LEAST 12 INCHES WIDE. TRASH RECEPTACLES ARE ABLE TO USE STANDARD BAGS TO COLLECT TRASH	COMPLIES	L-602.00

PUBLIC ACCESS AREA 1 (PAA) = 12,350 SF

ITEM	PROVIDED	DRAWING REFERENCE
CIRCULATION PATH		
CIRCULATION PATH MINIMUM WIDTH	10' MINIMUM CLEAR CIRCULATION PATH	L-100.00
SEATING		
SEATING LINEAR FOOTAGE	130.73 LF OF BACKLESS SEATING	L-401.00
SEATING DEPTH	20" SEATING DEPTH	L-600.00
SEATING HEIGHT	16" SEATING HEIGHT	L-600.00
SEATING CLEARANCE	MINIMUM 22" CLEAR PROVIDED FROM 12' WIDE CIRCULATION PLAN	L-100.00 & L-401.00
PLANTING		
PLANTING AREAS	3,034.38 SF OF PLANTING	L-301.00
CANOPY TREES	4 CANOPY TREES - 16 TREES TOTAL	L-300.00
TREE CALIPER	ALL TREES PROVIDED WITH 3" MIN. CALIPER OR EQUIVALENT HEIGHT FOR MULTI STEM	L-601.00
SINGLE TREE PITS	MIN. 3'-6" DEPTH PROVIDED FOR TREES, MIN. 2'-6" DEPTH PROVIDED FOR SHRUBS, & MIN. 2'-0" DEPTH PROVIDED FOR GROUNDCOVER	L-601.00
CONTINUOUS TREE PITS	MIN. 3'-6" DEPTH PROVIDED FOR TREES, MIN. 2'-6" DEPTH PROVIDED FOR SHRUBS, & MIN. 2'-0" DEPTH PROVIDED FOR GROUNDCOVER	L-601.00
PLANTING BED SQUARE FOOTAGE	ALL PLANTING DEPTHS ARE MINIMUM OF 3'-6" & A MINIMUM AREA OF 30 SQUARE FEET FOR EACH TREE IS PROVIDED	L-601.00
RAISED PLANTING BEDS	24" MAX.	L-200.00
IRRIGATION	BUILT-IN IRRIGATION SYSTEM PROVIDED	N/A
SITE AMENITIES		
TRASH RECEPTACLES	2 TRASH RECEPTACLES	L-401.00 & L-402.00
LIGHTING		
LIGHTING AT WALKABLE AREAS	LIGHTING AT ALL WALKABLE AREAS SHALL BE MIN. OF 1 HORIZONTAL FOOT CANDLES	L-403.00
LIGHTING AT ALL OTHER AREAS	LIGHTING AT ALL OTHER AREAS SHALL BE MIN. OF 0.2 HORIZONTAL FOOT CANDLES	L-403.00
PAVING		
PAVING WITHIN REQ. CIRCULATION PATHS	ASPHALT / PRECAST UNIT PAVERS	L-600.00
PAVING OTHER THAN WITHIN REQ. CIRCULATION PATHS	SQUARE ASPHALT UNIT PAVERS / EXTERIOR BRICK/ TINTED CONCRETE	L-600.00
UNIT PAVER THICKNESS	PEDESTRIAN AND VEHICULAR PAVERS ARE 3" THICK	L-600.00

PUBLIC ACCESS AREA 2 (PAA) = 14,053 SF

ITEM	PROVIDED	DRAWING REFERENCE
CIRCULATION PATH		
CIRCULATION PATH MINIMUM WIDTH	10' MINIMUM CLEAR CIRCULATION PATH	L-100.00
SEATING		
SEATING LINEAR FOOTAGE	187.22 LF OF BACKED SEATING	L-402.00
SEATING DEPTH	20" SEATING DEPTH	L-600.00
SEATING HEIGHT	16" SEATING HEIGHT	L-600.00
SEATING CLEARANCE	MINIMUM 22" CLEAR PROVIDED FROM 12' WIDE CIRCULATION PLAN	L-100.00
PLANTING		
PLANTING AREAS	7,508 SF OF PLANTING	L-301.00
CANOPY TREES	10 CANOPY TREES - 29 TREES TOTAL	L-300.00
TREE CALIPER	ALL TREES PROVIDED WITH 3" MIN. CALIPER OR EQUIVALENT HEIGHT FOR MULTI STEM	L-601.00
SINGLE TREE PITS	MIN. 3'-6" DEPTH PROVIDED FOR TREES, MIN. 2'-6" DEPTH PROVIDED FOR SHRUBS, & MIN. 2'-0" DEPTH PROVIDED FOR GROUNDCOVER	L-601.00
CONTINUOUS TREE PITS	MIN. 3'-6" DEPTH PROVIDED FOR TREES, MIN. 2'-6" DEPTH PROVIDED FOR SHRUBS, & MIN. 2'-0" DEPTH PROVIDED FOR GROUNDCOVER	L-601.00
PLANTING BED SQUARE FOOTAGE	ALL PLANTING DEPTHS ARE MINIMUM OF 3'-6" & A MINIMUM AREA OF 30 SQUARE FEET FOR EACH TREE IS PROVIDED	L-601.00
RAISED PLANTING BEDS	24" MAX.	L-200.00
IRRIGATION	BUILT-IN IRRIGATION SYSTEM PROVIDED	N/A
SITE AMENITIES		
TRASH RECEPTACLES	2 TRASH RECEPTACLES	L-401.00 & L-402.00
LIGHTING		
LIGHTING AT WALKABLE AREAS	LIGHTING AT ALL WALKABLE AREAS SHALL BE MIN. OF 1 HORIZONTAL FOOT CANDLES	L-403.00
LIGHTING AT ALL OTHER AREAS	LIGHTING AT ALL OTHER AREAS SHALL BE MIN. OF 0.2 HORIZONTAL FOOT CANDLES	L-403.00
PAVING		
PAVING WITHIN REQ. CIRCULATION PATHS	ASPHALT / PRECAST UNIT PAVERS	L-600.00
PAVING OTHER THAN WITHIN REQ. CIRCULATION PATHS	SQUARE ASPHALT UNIT PAVERS / EXTERIOR BRICK/ TINTED CONCRETE	L-600.00
UNIT PAVER THICKNESS	PEDESTRIAN AND VEHICULAR PAVERS ARE 3" THICK	L-600.00



OWNER
KENT MEMBER LLC
505 FLUSHING AVE, BROOKLYN, NY 11205

CIVIL / PARKING ENGINEER
PHILIB HABIB AND ASSOCIATES
102 MADISON AVE # 11, NEW YORK, NY 10016

LANDSCAPE ARCHITECT
MPFP
120 BROADWAY 20TH FL, NEW YORK, NY 10271

LIGHTING DESIGNER
ONE LUX STUDIO
158 WEST 29TH STREET, FL 10, NEW YORK, NY 10001

LAND USE CONSULTANT
HERRICK FEINSTEIN LLP
TWO PARK AVENUE, NEW YORK, NY 10016

REV	DATE	DESCRIPTION
	3/24/2021	ULURP SUBMISSION
	11/03/2021	ULURP SUBMISSION
	06/22/2022	ULURP SUBMISSION
	09/08/2022	ULURP SUBMISSION
	01/11/2023	DPR REVIEW
	03/22/2023	ULURP SUBMISSION
	07/14/2023	ULURP SUBMISSION
	10/2/2023	ULURP SUBMISSION
	10/20/23	ULURP SUBMISSION

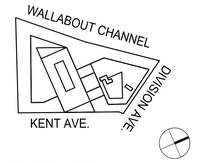

KEY PLAN:NTS

500 KENT

500 KENT AVENUE
BROOKLYN, NY 11249

ID #2019K0330

WATERFRONT PUBLIC ACCESS AREA ZONING CALCULATIONS.

SCALE:

DRAWING #:
Z-07.00

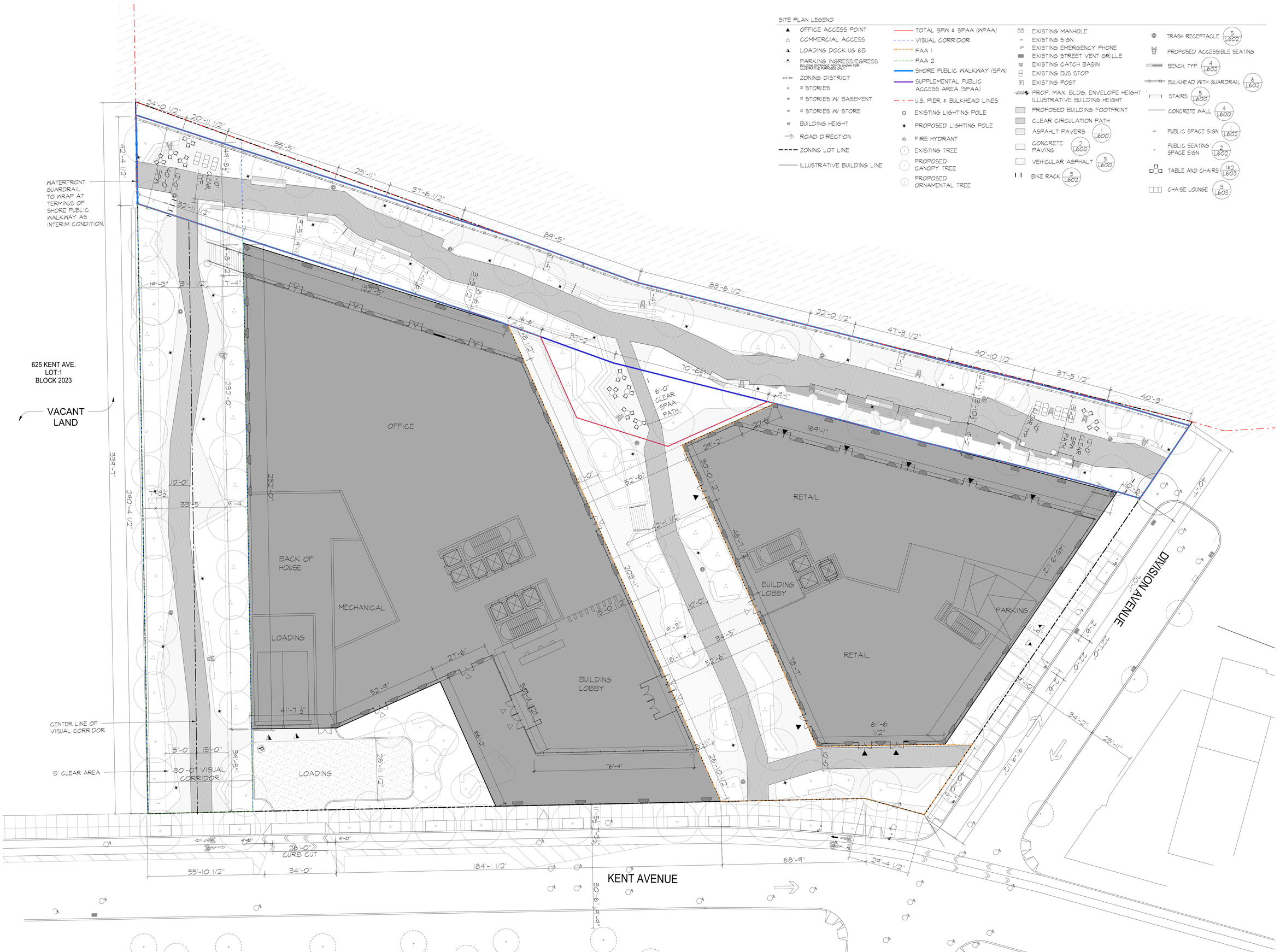



OWNER
KENT MEMBER LLC
505 FLUSHING AVE, BROOKLYN, NY 11205

CIVIL / PARKING ENGINEER
PHILIB HABIB AND ASSOCIATES
102 MADISON AVE # 11, NEW YORK, NY 10016

LANDSCAPE ARCHITECT
MPFP
120 BROADWAY 20TH FL, NEW YORK, NY 10271

LIGHTING DESIGNER
ONE LUX STUDIO
158 WEST 29TH STREET, FL 10, NEW YORK, NY 10001

LAND USE CONSULTANT
HERRICK FEINSTEIN LLP
TWO PARK AVENUE, NEW YORK, NY 10016

REV	DATE	DESCRIPTION
	3/24/2021	ULURP SUBMISSION
	11/03/2021	ULURP SUBMISSION
	06/22/2022	ULURP SUBMISSION
	09/08/2022	ULURP SUBMISSION
	01/11/2023	DPR REVIEW
	03/22/2023	ULURP SUBMISSION
	07/14/2023	ULURP SUBMISSION
	10/2/2023	ULURP SUBMISSION
	10/20/23	ULURP SUBMISSION

KEY PLAN:NTS

500 KENT

500 KENT AVENUE
BROOKLYN, NY 11249
ID #2019K0330

KEY & DIMENSION PLAN

SCALE: $\frac{1}{16}$" = 1'-0"

DRAWING #:
L-100.00



SITE PLAN LEGEND

- OFFICE ACCESS POINT
- COMMERCIAL ACCESS
- LOADING DOCK UG 6B
- PARKING INGRESS/EGRESS (BUILDING ENTRANCE POINTS SHOWN FOR ILLUSTRATIVE PURPOSES ONLY)
- M1-5 / R7X ZONING DISTRICT
- # STORIES
- # STORIES W/ BASEMENT
- # STORIES W/ STORE
- BUILDING HEIGHT
- ROAD DIRECTION
- ZONING LOT LINE
- ILLUSTRATIVE BUILDING LINE
- TOTAL SPN & SPAA (NPAA)
- VISUAL CORRIDOR
- PAA 1
- PAA 2
- SHORE PUBLIC WALKWAY (SPW)
- SUPPLEMENTAL PUBLIC ACCESS AREA (SPAA)
- U.S. PIER & BULKHEAD LINES
- EXISTING LIGHTING POLE
- PROPOSED LIGHTING POLE
- FIRE HYDRANT
- EXISTING TREE
- PROPOSED CANOPY TREE
- PROPOSED ORNAMENTAL TREE
- EXISTING MANHOLE
- EXISTING SIGN
- EXISTING EMERGENCY PHONE
- EXISTING STREET VENT GRILLE
- EXISTING CATCH BASIN
- EXISTING BUS STOP
- EXISTING POST
- PROP. MAX. BLDG. ENVELOPE HEIGHT ILLUSTRATIVE BUILDING HEIGHT
- PROPOSED BUILDING FOOTPRINT
- CLEAR CIRCULATION PATH
- ASPHALT PAVERS (1/L600)
- CONCRETE PAVING (2/L600)
- VEHICULAR ASPHALT (3/L600)
- BIKE RACK (3/L602)
- TRASH RECEPTACLE (5/L602)
- BENCH, TYP. (4/L602)
- BULKHEAD WITH GUARDRAIL (6/L602)
- STAIRS (5/L600)
- CONCRETE WALL (4/L600)
- PUBLIC SPACE SIGN (1/L602)
- PUBLIC SEATING SPACE SIGN (2/L602)

625 KENT AVE.
LOT:1
BLOCK 2023

VACANT LAND

OFFICE

BACK OF HOUSE

MECHANICAL

LOADING

LOADING

BUILDING LOBBY

RETAIL

RETAIL

BUILDING LOBBY

PARKING

50'-0" VISUAL CORRIDOR

6'-0" CLEAR SPAA PATH

DIVISION AVENUE

KENT AVENUE

WALLABOUT CHANNEL

DIVISION AVE.

KENT AVE.

OWNER
KENT MEMBER LLC
505 FLUSHING AVE, BROOKLYN, NY 11205

CIVIL / PARKING ENGINEER
PHILIB HABIB AND ASSOCIATES
102 MADISON AVE # 11, NEW YORK, NY 10016

LANDSCAPE ARCHITECT
MPFP
120 BROADWAY 20TH FL, NEW YORK, NY 10271

LIGHTING DESIGNER
ONE LUX STUDIO
158 WEST 29TH STREET, FL 10, NEW YORK, NY 10001

LAND USE CONSULTANT
HERRICK FEINSTEIN LLP
TWO PARK AVENUE, NEW YORK, NY 10016

REV	DATE	DESCRIPTION
	3/24/2021	ULURP SUBMISSION
	11/03/2021	ULURP SUBMISSION
	06/22/2022	ULURP SUBMISSION
	09/08/2022	ULURP SUBMISSION
	01/11/2023	DPR REVIEW
	03/22/2023	ULURP SUBMISSION
	07/14/2023	ULURP SUBMISSION
	10/2/2023	ULURP SUBMISSION
	10/20/23	ULURP SUBMISSION

KEY PLAN:NTS

500 KENT

500 KENT AVENUE
BROOKLYN, NY 11249
ID #2019K0330

GRADING PLAN

SCALE: $\frac{1}{16}$" = 1'-0"

DRAWING #:
L-200.00

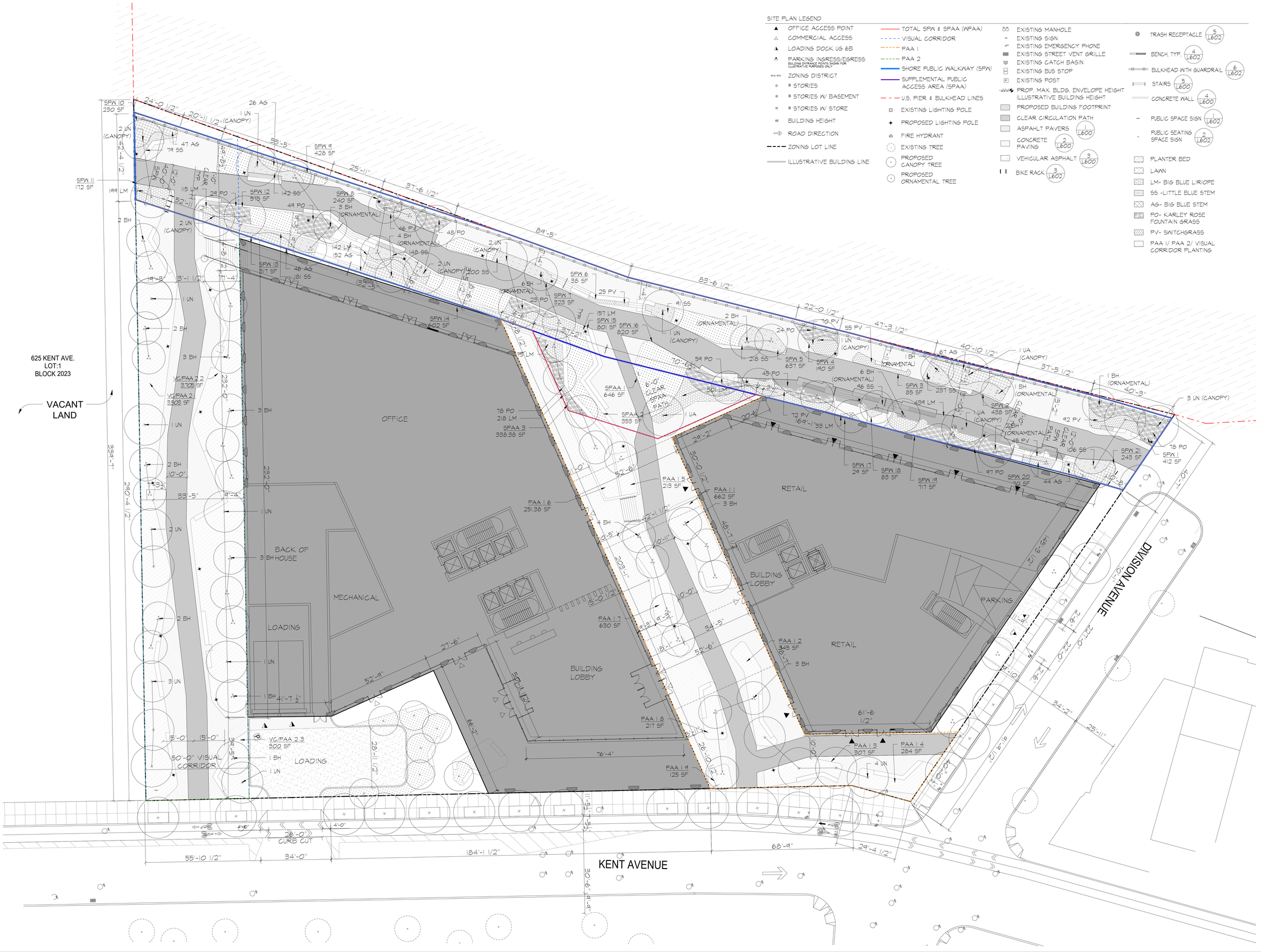



OWNER
KENT MEMBER LLC
505 FLUSHING AVE, BROOKLYN, NY 11205

CIVIL / PARKING ENGINEER
PHILIB HABIB AND ASSOCIATES
102 MADISON AVE # 11, NEW YORK, NY 10016

LANDSCAPE ARCHITECT
MPFP
120 BROADWAY 20TH FL, NEW YORK, NY 10271

LIGHTING DESIGNER
ONE LUX STUDIO
158 WEST 29TH STREET, FL 10, NEW YORK, NY 10001

LAND USE CONSULTANT
HERRICK FEINSTEIN LLP
TWO PARK AVENUE, NEW YORK, NY 10016

REV	DATE	DESCRIPTION
	3/24/2021	ULURP SUBMISSION
	11/03/2021	ULURP SUBMISSION
	06/22/2022	ULURP SUBMISSION
	09/08/2022	ULURP SUBMISSION
	01/11/2023	DPR REVIEW
	03/22/2023	ULURP SUBMISSION
	07/14/2023	ULURP SUBMISSION
	10/2/2023	ULURP SUBMISSION
	10/20/23	ULURP SUBMISSION

KEY PLAN:NTS

500 KENT

500 KENT AVENUE
BROOKLYN, NY 11249
ID #2019K0330

PLANTING PLAN

SCALE: 1/16" = 1'-0"

DRAWING #:
L-300.00



NEW HORIZON ELM



HERITAGE RIVER BIRCH

1 TREES PRECEDENT

SCALE: NTS



BIG BLUE LILYTURF



GRO-LOW SUMAC



COMMON BEARBERRY



RUGOSA ROSE



SWITCH GRASS



KARLEY ROSE FOUNTAIN GRASS



LITTLE BLUE STEM



SWITCH GRASS



BROOMSEDGE



SLIM STEM REEDGRASS

2 SHRUBS, GRASSES, & GROUNDCOVERS PRECEDENT

SCALE: NTS

WATERFRONT SPA + SPAA PLANTING SCHEDULE

KEY	BOTANICAL NAME	COMMON NAME	QTY.	SIZE	ROOT	SPACING	COMMENTS	NATIVE PLANTS
TREES								
BH	BETULA NIGRA 'HERITAGE'	HERITAGE RIVER BIRCH	25	16'-18' HT	B&B	AS SHOWN	3 STEM MIN	YES
UN	ULMUS 'NEW HORIZON'	NEW HORIZON ELM	17	4-4½" CAL	B&B	AS SHOWN		NO
ORNAMENTAL GRASSES								
AG	ANDROPOGON GERARDII	BIG BLUESTEM GRASS	382	5 GAL.	CONT.	24" O.C.		YES
PO	PENNISETUM ORIENTALE	KARLEY ROSE FOUNTAIN GRASS	531	5 GAL	CONT.	24" O.C.		NO
PV	PANICUM VIRGATUM	SWITCHGRASS	405	5 GAL	CONT.	16" O.C.		YES
SS	SCHIZACHYRIUM SCOPARIUM	LITTLE BLUESTEM GRASS	1498	3 GAL.	CONT.	12" O.C.		YES
GROUNDCOVER								
LM	LIRIOPE MUSCARI 'BIG BLUE'	BIG BLUE LILY TURF	1881	2 GAL.	CONT.	12" O.C.		NO

PAA 1 TREE PLANTING SCHEDULE

KEY	BOTANICAL NAME	COMMON NAME	QTY.	SIZE	ROOT	SPACING	COMMENTS	NATIVE PLANTS
TREES								
BH	BETULA NIGRA 'HERITAGE'	HERITAGE RIVER BIRCH	12	16'-18' HT	B&B	AS SHOWN	3 STEM MIN	YES
UN	ULMUS 'NEW HORIZON'	NEW HORIZON ELM	4	4-4½" CAL	B&B	AS SHOWN		NO

VISUAL CORRIDOR/PAA 2 TREE PLANTING SCHEDULE

KEY	BOTANICAL NAME	COMMON NAME	QTY.	SIZE	ROOT	SPACING	COMMENTS	NATIVE PLANTS
TREES								
BH	BETULA NIGRA 'HERITAGE'	HERITAGE RIVER BIRCH	19	16'-18' HT	B&B	AS SHOWN	3 STEM MIN	YES
UN	ULMUS 'NEW HORIZON'	NEW HORIZON ELM	10	4-4½" CAL	B&B	AS SHOWN		NO

SHORE PUBLIC WALKWAY
SPA 1 = 412 SF
SPA 2 = 438 SF
SPA 3 = 85 SF
SPA 4 = 190 SF
SPA 5 = 637 SF
SPA 6 = 38 SF
SPA 7 = 323 SF
SPA 8 = 240 SF
SPA 9 = 428 SF
SPA 10 = 230 SF
SPA 11 = 172 SF
SPA 12 = 575 SF
SPA 13 = 317 SF
SPA 14 = 602 SF
SPA 15 = 801 SF
SPA 16 = 820 SF
SPA 17 = 24 SF
SPA 18 = 83 SF
SPA 19 = 717 SF
SPA 20 = 70 SF
SPA 21 = 243 SF

TOTAL = 7,450 SF

SUPPLEMENTAL PUBLIC ACCESS AREA
SPAA 1 = 646 SF
SPAA 2 = 353 SF
SPAA 3 = 338.38 SF

TOTAL = 1,337.38 SF

PAA 1
PAA 1, 1 = 662 SF
PAA 1, 2 = 345 SF
PAA 1, 3 = 307 SF
PAA 1, 4 = 284 SF
PAA 1, 5 = 213 SF
PAA 1, 6 = 251.38 SF
PAA 1, 7 = 630 SF
PAA 1, 8 = 217 SF
PAA 1, 9 = 125 SF

TOTAL = 3,084.38 SF

VISUAL CORRIDOR/ PAA 2
VC/PAA 2, 1 = 3,503 SF
VC/PAA 2, 2 = 3,705 SF
VC/PAA 2, 3 = 300 SF

TOTAL = 7,508 SF



OWNER
KENT MEMBER LLC
505 FLUSHING AVE, BROOKLYN, NY 11205

CIVIL / PARKING ENGINEER
PHILIB HABIB AND ASSOCIATES
102 MADISON AVE # 11, NEW YORK, NY 10016

LANDSCAPE ARCHITECT
MPFP
120 BROADWAY 20TH FL, NEW YORK, NY 10271

LIGHTING DESIGNER
ONE LUX STUDIO
158 WEST 29TH STREET, FL 10, NEW YORK, NY 10001

LAND USE CONSULTANT
HERRICK FEINSTEIN LLP
TWO PARK AVENUE, NEW YORK, NY 10016

REV	DATE	DESCRIPTION
	3/24/2021	ULURP SUBMISSION
	11/03/2021	ULURP SUBMISSION
	06/22/2022	ULURP SUBMISSION
	09/08/2022	ULURP SUBMISSION
	01/11/2023	DPR REVIEW
	03/22/2023	ULURP SUBMISSION
	07/14/2023	ULURP SUBMISSION
	10/2/2023	ULURP SUBMISSION
	10/20/23	ULURP SUBMISSION

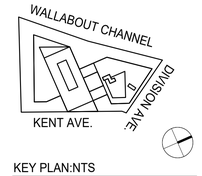

KEY PLAN:NTS

500 KENT

500 KENT AVENUE
BROOKLYN, NY 11249
ID #2019K0330

PLANT PRECEDENT IMAGES

SCALE:

DRAWING #:
L-301.00

SITE PLAN LEGEND

- OFFICE ACCESS POINT
- COMMERCIAL ACCESS
- LOADING DOCK US 6B
- PARKING INGRESS/EGRESS (BUILDING ENTRANCE POINTS SHOWN FOR ILLUSTRATIVE PURPOSES ONLY)
- M1-5 / R7X ZONING DISTRICT
- # STORIES
- # STORIES W/ BASEMENT
- # STORIES W/ STORE
- BUILDING HEIGHT
- ROAD DIRECTION
- ZONING LOT LINE
- ILLUSTRATIVE BUILDING LINE
- TOTAL SPN & SPAA (NPAA)
- VISUAL CORRIDOR
- PAA 1
- PAA 2
- SHORE PUBLIC WALKWAY (SPW)
- SUPPLEMENTAL PUBLIC ACCESS AREA (SPAA)
- U.S. PIER & BULKHEAD LINES
- EXISTING LIGHTING POLE
- PROPOSED LIGHTING POLE
- FIRE HYDRANT
- EXISTING TREE
- PROPOSED CANOPY TREE
- PROPOSED ORNAMENTAL TREE
- EXISTING MANHOLE
- EXISTING SIGN
- EXISTING EMERGENCY PHONE
- EXISTING STREET VENT GRILLE
- EXISTING CATCH BASIN
- EXISTING BUS STOP
- EXISTING POST
- PROP. MAX. BLDG. ENVELOPE HEIGHT ILLUSTRATIVE BUILDING HEIGHT
- PROPOSED BUILDING FOOTPRINT
- CLEAR CIRCULATION PATH
- ASPAHLT PAVERS (1/L600)
- CONCRETE PAVING (2/L600)
- VEHICULAR ASPHALT (3/L600)
- BIKE RACK (3/L602)
- TRASH RECEPTACLE (5/L602)
- BENCH, TYP. (4/L602)
- BULKHEAD WITH GUARDRAIL (6/L602)
- STAIRS (5/L600)
- CONCRETE WALL (4/L600)
- PUBLIC SPACE SIGN (1/L602)
- PUBLIC SEATING SPACE SIGN (2/L602)
- LAWN
- SHRUBS, GRASSES & GROUNDCOVERS (2&3/L601)

625 KENT AVE.
LOT:1
BLOCK 2023

VACANT LAND

OFFICE

BACK OF HOUSE

MECHANICAL

LOADING

LOADING

BUILDING LOBBY

RETAIL

BUILDING LOBBY

RETAIL

PARKING

ASPHALT /PRECAST PAVERS (1/L600)

PRECAST STAIRS (8/L600)

6'-0" CLEAR SPAA PATH

12'-0" CLEAR SPAA PATH

ASPHALT/PRECAST PAVERS

15'-0" | 15'-0" (6/L600)

50'-0" VISUAL CORRIDOR

CENTER LINE OF VISUAL CORRIDOR

15' CLEAR AREA

26'-0" CURB CUT

KENT AVENUE

DIVISION AVENUE

WALLABOUT CHANNEL

DIVISION AVE.

KENT AVE.

KEY PLAN:NTS

500 KENT

500 KENT AVENUE
BROOKLYN, NY 11249

ID #2019K0330

MATERIALS PLAN

SCALE: 1/16" = 1'-0"

DRAWING #:
L-400.00



OWNER
KENT MEMBER LLC
505 FLUSHING AVE, BROOKLYN, NY 11205

CIVIL / PARKING ENGINEER
PHILIB HABIB AND ASSOCIATES
102 MADISON AVE # 11, NEW YORK, NY 10016

LANDSCAPE ARCHITECT
MPFP
120 BROADWAY 20TH FL, NEW YORK, NY 10271

LIGHTING DESIGNER
ONE LUX STUDIO
158 WEST 29TH STREET, FL 10, NEW YORK, NY 10001

LAND USE CONSULTANT
HERRICK FEINSTEIN LLP
TWO PARK AVENUE, NEW YORK, NY 10016

REV	DATE	DESCRIPTION
	3/24/2021	ULURP SUBMISSION
	11/03/2021	ULURP SUBMISSION
	06/22/2022	ULURP SUBMISSION
	09/08/2022	ULURP SUBMISSION
	01/11/2023	DPR REVIEW
	03/22/2023	ULURP SUBMISSION
	07/14/2023	ULURP SUBMISSION
	10/2/2023	ULURP SUBMISSION
	10/20/23	ULURP SUBMISSION





OWNER
KENT MEMBER LLC
505 FLUSHING AVE, BROOKLYN, NY 11205

CIVIL / PARKING ENGINEER
PHILIB HABIB AND ASSOCIATES
102 MADISON AVE # 11, NEW YORK, NY 10016

LANDSCAPE ARCHITECT
MPFP
120 BROADWAY 20TH FL, NEW YORK, NY 10271

LIGHTING DESIGNER
ONE LUX STUDIO
158 WEST 29TH STREET, FL 10, NEW YORK, NY 10001

LAND USE CONSULTANT
HERRICK FEINSTEIN LLP
TWO PARK AVENUE, NEW YORK, NY 10016

REV	DATE	DESCRIPTION
	3/24/2021	ULURP SUBMISSION
	11/03/2021	ULURP SUBMISSION
	06/22/2022	ULURP SUBMISSION
	09/08/2022	ULURP SUBMISSION
	01/11/2023	DPR REVIEW
	03/22/2023	ULURP SUBMISSION
	07/14/2023	ULURP SUBMISSION
	10/2/2023	ULURP SUBMISSION
	10/20/23	ULURP SUBMISSION

KEY PLAN:NTS

500 KENT

500 KENT AVENUE
BROOKLYN, NY 11249
ID #2019K0330

FURNITURE PLAN

SCALE: 1/16" = 1'-0"

DRAWING #:
L-401.00

SHORE PUBLIC WALKWAY AREA SEATING SCHEDULE

ID / TAG	TYPE	QTY.	SEATING TOTAL
BB1	BACKED BENCH	1	6.08 LF BACKED
BB2	BACKED BENCH	1	13.33 LF BACKED
BB3	BACKED BENCH	1	6.66 LF BACKED
BB4	BACKED BENCH	1	11.08 LF BACKED
BB5	BACKED BENCH	1	8.25 LF BACKED
BB6	BACKED BENCH	1	13.83 LF BACKED
BB7	BACKED BENCH	1	10 LF BACKED
BB8	BACKED BENCH	1	16.33 LF BACKED
BB9	BACKED BENCH	1	6.75 LF BACKED
TOTAL		9	92.31 LF OF BACKED BENCH
BWB1	BACKLESS BENCH	1	4.916 LF BACKLESS BENCH
BWB2	BACKLESS BENCH	1	5.83 LF BACKLESS BENCH
BWB3	BACKLESS BENCH	1	14 LF BACKLESS BENCH
BWB4	BACKLESS BENCH	1	19.25 LF BACKLESS BENCH
BWB5	BACKLESS BENCH	1	3.916 LF BACKLESS BENCH
BWB6	BACKLESS BENCH	1	13 LF BACKLESS BENCH
BWB7	BACKLESS BENCH	1	6.66 LF BACKLESS BENCH
BWB8	BACKLESS BENCH	1	2 LF BACKLESS BENCH
BWB9	BACKLESS BENCH	1	6.33 LF BACKLESS BENCH
BWB10	BACKLESS BENCH	1	14.16 LF BACKLESS BENCH
BWB11	BACKLESS BENCH	1	4.66 LF BACKLESS BENCH
BWB12	BACKLESS BENCH	1	7.83 LF BACKLESS BENCH
BWB13	BACKLESS BENCH	1	2.75 LF BACKLESS BENCH
BWB14	BACKLESS BENCH	1	13.416 LF BACKLESS BENCH
BWB15	BACKLESS BENCH	1	10.66 LF BACKLESS BENCH
TOTAL		15	129.378 LF OF BACKLESS BENCH
MC1	MOVABLE CHAIR	3	4.5 LF MOVABLE CHAIR
MC2	MOVABLE CHAIR	2	3 LF MOVABLE CHAIR
MC3	MOVABLE CHAIR	3	4.5 LF MOVABLE CHAIR
MC4	MOVABLE CHAIR	3	4.5 LF MOVABLE CHAIR
MC5	MOVABLE CHAIR	3	4.5 LF MOVABLE CHAIR
MC6	MOVABLE CHAIR	4	6 LF MOVABLE CHAIR
TOTAL		18	27.00 LF MOVABLE CHAIR
LC1	LOUNGE CHAIR	1	3 LF LOUNGE CHAIR
LC2	LOUNGE CHAIR	1	3 LF LOUNGE CHAIR
LC3	LOUNGE CHAIR	1	3 LF LOUNGE CHAIR
LC4	LOUNGE CHAIR	1	3 LF LOUNGE CHAIR
LC5	LOUNGE CHAIR	1	3 LF LOUNGE CHAIR
LC6	LOUNGE CHAIR	1	3 LF LOUNGE CHAIR
LC7	LOUNGE CHAIR	1	3 LF LOUNGE CHAIR
LC8	LOUNGE CHAIR	1	3 LF LOUNGE CHAIR
TOTAL		8	24 LF LOUNGE CHAIR
SS1	SEATING STEP	1	19 LF SEATING STEP
SS2	SEATING STEP	1	9.33 LF SEATING STEP
SS3	SEATING STEP	1	9.25 LF SEATING STEP
SS4	SEATING STEP	1	11.916 LF SEATING STEP
TOTAL			49.496 LF SEATING STEP
P1	SEATING POD	1	2 LF POD
P2	SEATING POD	1	2 LF POD
TOTAL		2	4 LF POD

SHORE PUBLIC WALKWAY FURNISHING & SIGNAGE SCHEDULE

ID / TAG	TYPE	QTY.
TC1	TRASH CAN	1
TC2	TRASH CAN	1
TC3	TRASH CAN	1
TC4	TRASH CAN	1
TC6	TRASH CAN	1
TC7	TRASH CAN	1
TOTAL		6
ES1	ENTRY SIGN	1
WS2	WPAA SIGN	1
SS1	WPAA SEATING SIGN	1
SS2	WPAA SEATING SIGN	1
SS3	WPAA SEATING SIGN	1
SS4	WPAA SEATING SIGN	1
SS5	WPAA SEATING SIGN	1
TOTAL		7
BR1	DOUBLE SIDED BIKE RACK	1
BR2	DOUBLE SIDED BIKE RACK	1
BR3	DOUBLE SIDED BIKE RACK	1
BR4	DOUBLE SIDED BIKE RACK	1
BR5	DOUBLE SIDED BIKE RACK	1
BR6	DOUBLE SIDED BIKE RACK	1
TOTAL		5
LP1	LIGHTPOLE	1
LP2	LIGHTPOLE	1
LP3	LIGHTPOLE	1
LP4	LIGHTPOLE	1
LP5	LIGHTPOLE	1
LP6	LIGHTPOLE	1
LP7	LIGHTPOLE	1
LP8	LIGHTPOLE	1
LP9	LIGHTPOLE	1
LP10	LIGHTPOLE	1
LP11	LIGHTPOLE	1
LP12	LIGHTPOLE	1
LP13	LIGHTPOLE	1
LP14	LIGHTPOLE	1
LP15	LIGHTPOLE	1
LP16	LIGHTPOLE	1
TOTAL		16

SHORE PUBLIC WALKWAY & SUPPLEMENTAL PUBLIC ACCESS AREA SEATNG REQUIRMENTS

SEATING REQ.	REQUIRED	PROVIDED	TYPES
TOTAL SEATING	307.33 LF	378.684 LF	
SEATING W/ BACKS	153.66 LF	165.81 LF	BB, MC, LC
SOCIAL SEATING	76.83 LF	77.50 LF	MC, LC, P
TABLES	50.83 SF	55 SF	
SHADED SEATING	61.46 LF	230.184	BB, BWB, SS,

SUPPLEMENTAL PUBLIC ACCESS AREA SEATING SCHEDULE

ID / TAG	TYPE	QTY.	SEATING TOTAL
BWB16	BACKLESS BENCH	1	30 LF BACKLESS BENCH
TOTAL		1	30 LF BACKLESS BENCH
MC7	MOVABLE CHAIR	3	4.5 LF MOVABLE CHAIR
MC8	MOVABLE CHAIR	3	4.5 LF MOVABLE CHAIR
MC9	MOVABLE CHAIR	3	4.5 LF MOVABLE CHAIR
MC10	MOVABLE CHAIR	3	4.5 LF MOVABLE CHAIR
MC11	MOVABLE CHAIR	3	4.5 LF MOVABLE CHAIR
TOTAL		15	22.5 LF MOVABLE CHAIR

SUPPLEMENTAL PUBLIC ACCESS FURNISHING & SIGNAGE SCHEDULE

ID / TAG	TYPE	QTY.
TC5	TRASH CAN	1
TOTAL		1
WS1	SPAA SIGN	1
SS6	WPAA SEATING SIGN	1
TOTAL		2
LP17	LIGHTPOLE	1
TOTAL		1

VISUAL CORRIDOR/ PUBLICLY ACCESSIBLE AREA 2 SEATING SCHEDULE

ID / TAG	TYPE	QTY.	SEATING TOTAL
BWB23	BACKLESS BENCH	1	24.16 LF BACKLESS BENCH
BWB24	BACKLESS BENCH	1	24.33 LF BACKLESS BENCH
BWB25	BACKLESS BENCH	1	8 LF BACKLESS BENCH
BWB26	BACKLESS BENCH	1	41.75 LF BACKLESS BENCH
BWB27	BACKLESS BENCH	1	16.41 LF BACKLESS BENCH
BWB28	BACKLESS BENCH	1	8.16 LF BACKLESS BENCH
BWB29	BACKLESS BENCH	1	26.58 LF BACKLESS BENCH
BWB30	BACKLESS BENCH	1	13 LF BACKLESS BENCH
BWB31	BACKLESS BENCH	1	24.83 LF BACKLESS BENCH
TOTAL		9	187.22 LF BACKLESS BENCH

VISUAL CORRIDOR/ PUBLICLY ACCESSIBLE AREA 2 FURNISHING

ID / TAG	TYPE	QTY.
TC11	TRASH CAN	1
TC12	TRASH CAN	1
TOTAL		2
LP22	LIGHTPOLE	1
LP23	LIGHTPOLE	1
LP24	LIGHTPOLE	1
LP25	LIGHTPOLE	1
LP26	LIGHTPOLE	1
LP27	LIGHTPOLE	1
LP28	LIGHTPOLE	1
LP29	LIGHTPOLE	1
LP30	LIGHTPOLE	1
TOTAL		9
ES2	ENTRY SIGN	1
TOTAL		1

PUBLICLY ACCESSIBLE AREA 1 SEATING SCHEDULE

ID / TAG	TYPE	QTY.	SEATING TOTAL
BWB17	BACKLESS BENCH	1	20.91 LF BACKLESS BENCH
BWB18	BACKLESS BENCH	1	21.83 LF BACKLESS BENCH
BWB19	BACKLESS BENCH	1	20.83 LF BACKLESS BENCH
BWB20	BACKLESS BENCH	1	22 LF BACKLESS BENCH
BWB21	BACKLESS BENCH	1	20.41 LF BACKLESS BENCH
BWB22	BACKLESS BENCH	1	24.75 LF BACKLESS BENCH
TOTAL		6	130.73 LF BACKLESS BENCH

ACCESSIBLE AREA 1 FURNISHING SCHEDULE

ID / TAG	TYPE	QTY.
TC9	TRASH CAN	1
TC10	TRASH CAN	1
TOTAL		2
LP18	LIGHTPOLE	1
LP19	LIGHTPOLE	1
LP20	LIGHTPOLE	1
LP21	LIGHTPOLE	1
TOTAL		4



OWNER
KENT MEMBER LLC
505 FLUSHING AVE, BROOKLYN, NY 11205

CIVIL / PARKING ENGINEER
PHILIB HABIB AND ASSOCIATES
102 MADISON AVE # 11, NEW YORK, NY 10016

LANDSCAPE ARCHITECT
MPFP
120 BROADWAY 20TH FL, NEW YORK, NY 10271

LIGHTING DESIGNER
ONE LUX STUDIO
158 WEST 29TH STREET, FL 10, NEW YORK, NY 10001

LAND USE CONSULTANT
HERRICK FEINSTEIN LLP
TWO PARK AVENUE, NEW YORK, NY 10016

REV	DATE	DESCRIPTION
	3/24/2021	ULURP SUBMISSION
	11/03/2021	ULURP SUBMISSION
	06/22/2022	ULURP SUBMISSION
	09/08/2022	ULURP SUBMISSION
	01/11/2023	DPR REVIEW
	03/22/2023	ULURP SUBMISSION
	07/14/2023	ULURP SUBMISSION
	10/2/2023	ULURP SUBMISSION
	10/20/23	ULURP SUBMISSION

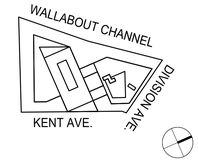

KEY PLAN:NTS

500 KENT

500 KENT AVENUE
BROOKLYN, NY 11249

ID #2019K0330

FURNITURE PLAN



SCALE:

DRAWING #:

L-402.00

LIGHTING LEGEND

XA — POLE LIGHT

PROVIDED ILLUMINATION LEVEL				
LABEL	AVG(FC)	MAX(FC)	MIN(FC)	AVG/MIN
WALKABLE AREA STATISTICS	2.26	4.96	0.3	7.77
OTHER AREA STATISTICS	1.93	4.30	0.3	7.54

SITE PLAN LEGEND

- OFFICE ACCESS POINT
- COMMERCIAL ACCESS
- LOADING DOCK UG 6B
- PARKING INGRESS/EGRESS (BUILDING ENTRANCE POINTS SHOWN FOR ILLUSTRATIVE PURPOSES ONLY)
- M1-5 / R7X — ZONING DISTRICT
- # STORIES
- # STORIES W/ BASEMENT
- # STORIES W/ STORE
- BUILDING HEIGHT
- ROAD DIRECTION
- ZONING LOT LINE
- ILLUSTRATIVE BUILDING LINE
- TOTAL SPA & SPAA (NPAA)
- VISUAL CORRIDOR
- PAA 1
- PAA 2
- SHORE PUBLIC WALKWAY (SPW)
- SUPPLEMENTAL PUBLIC ACCESS AREA (SPAA)
- U.S. PIER & BULKHEAD LINES
- EXISTING LIGHTING POLE
- PROPOSED LIGHTING POLE
- FIRE HYDRANT
- EXISTING TREE
- PROPOSED CANOPY TREE
- PROPOSED ORNAMENTAL TREE
- EXISTING MANHOLE
- EXISTING SIGN
- EXISTING EMERGENCY PHONE
- EXISTING STREET VENT GRILLE
- EXISTING CATCH BASIN
- EXISTING BUS STOP
- EXISTING POST
- PROP. MAX. BLDG. ENVELOPE HEIGHT ILLUSTRATIVE BUILDING HEIGHT
- PROPOSED BUILDING FOOTPRINT
- CLEAR CIRCULATION PATH
- ASPHALT PAVERS (1/L600)
- CONCRETE PAVING (2/L600)
- VEHICULAR ASPHALT (3/L600)
- BIKE RACK (3/L602)
- TRASH RECEPTACLE (5/L602)
- PROPOSED ACCESSIBLE SEATING
- BENCH, TYP. (4/L602)
- BULKHEAD WITH GUARDRAIL (6/L602)
- STAIRS (5/L600)
- CONCRETE WALL (4/L600)
- PUBLIC SPACE SIGN (1/L602)
- PUBLIC SEATING SPACE SIGN (2/L602)
- TABLE AND CHAIRS (12/L603)
- CHAISE LOUNGE (3/L603)

625 KENT AVE.
LOT:1
BLOCK 2023

VACANT LAND

OFFICE

BACK OF HOUSE

MECHANICAL

LOADING

LOADING

BUILDING LOBBY

BUILDING LOBBY

RETAIL

RETAIL

PARKING

DIVISION AVENUE

KENT AVENUE

CENTER LINE OF VISUAL CORRIDOR

15' CLEAR AREA

50'-0" VISUAL CORRIDOR

26'-0" CURB CUT



OWNER
KENT MEMBER LLC
505 FLUSHING AVE, BROOKLYN, NY 11205

CIVIL / PARKING ENGINEER
PHILIB HABIB AND ASSOCIATES
102 MADISON AVE # 11, NEW YORK, NY 10016

LANDSCAPE ARCHITECT
MPFP
120 BROADWAY 20TH FL, NEW YORK, NY 10271

LIGHTING DESIGNER
ONE LUX STUDIO
158 WEST 29TH STREET, FL 10, NEW YORK, NY 10001

LAND USE CONSULTANT
HERRICK FEINSTEIN LLP
TWO PARK AVENUE, NEW YORK, NY 10016

REV	DATE	DESCRIPTION
	3/24/2021	ULURP SUBMISSION
	11/03/2021	ULURP SUBMISSION
	06/22/2022	ULURP SUBMISSION
	09/08/2022	ULURP SUBMISSION
	01/11/2023	DPR REVIEW
	03/22/2023	ULURP SUBMISSION
	07/14/2023	ULURP SUBMISSION
	10/2/2023	ULURP SUBMISSION
	10/20/23	ULURP SUBMISSION

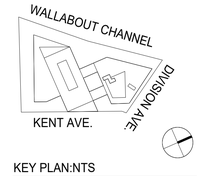

KEY PLAN:NTS

500 KENT

500 KENT AVENUE
BROOKLYN, NY 11249
ID #2019K0330

LIGHTING / PHOTOMETRIC PLAN

SCALE: 1/16" = 1'-0"

DRAWING #:
L-403.00

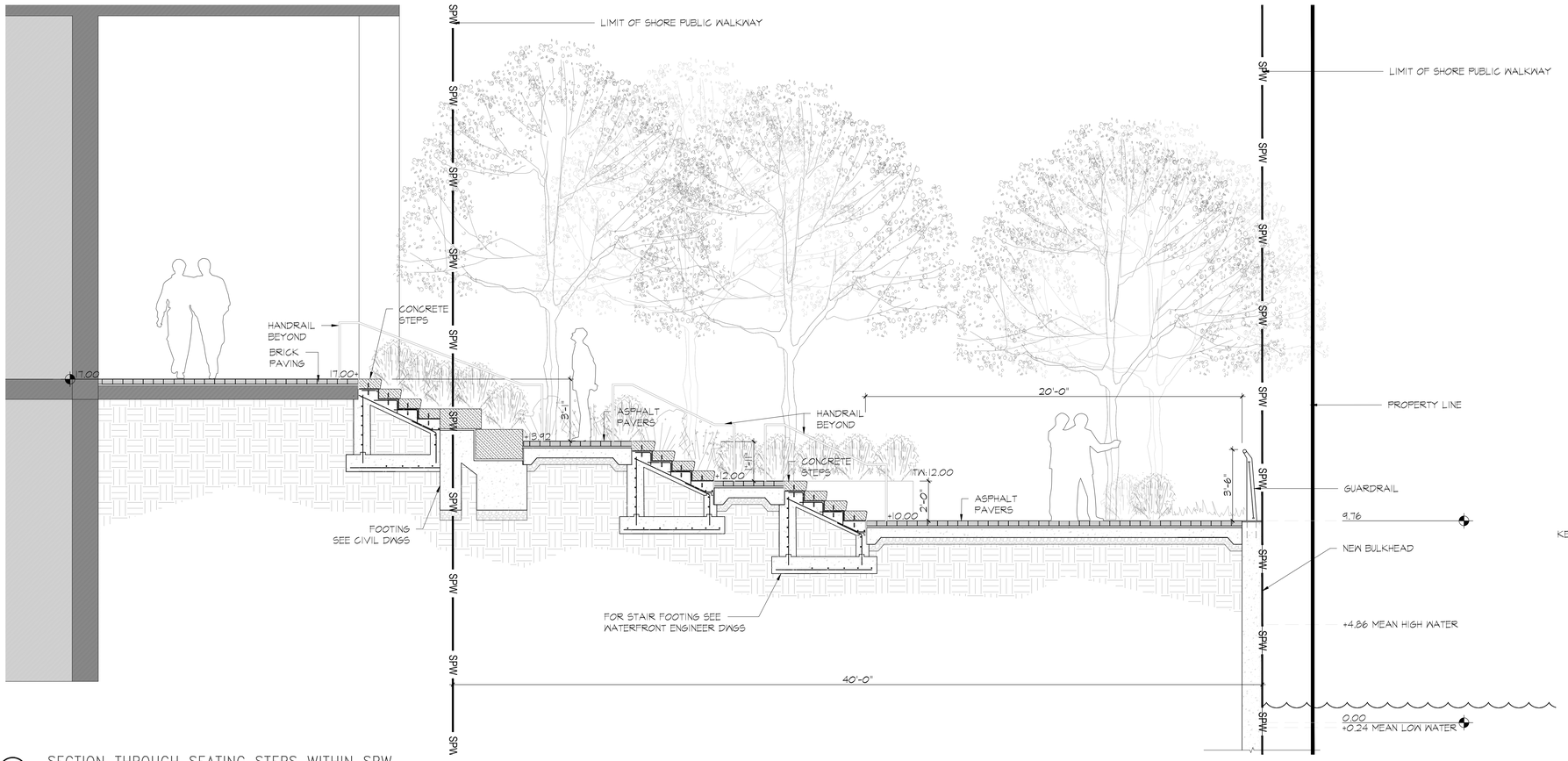

1 SECTION THROUGH SEATING STEPS WITHIN SPW

SCALE: 3/8" = 1'-0"

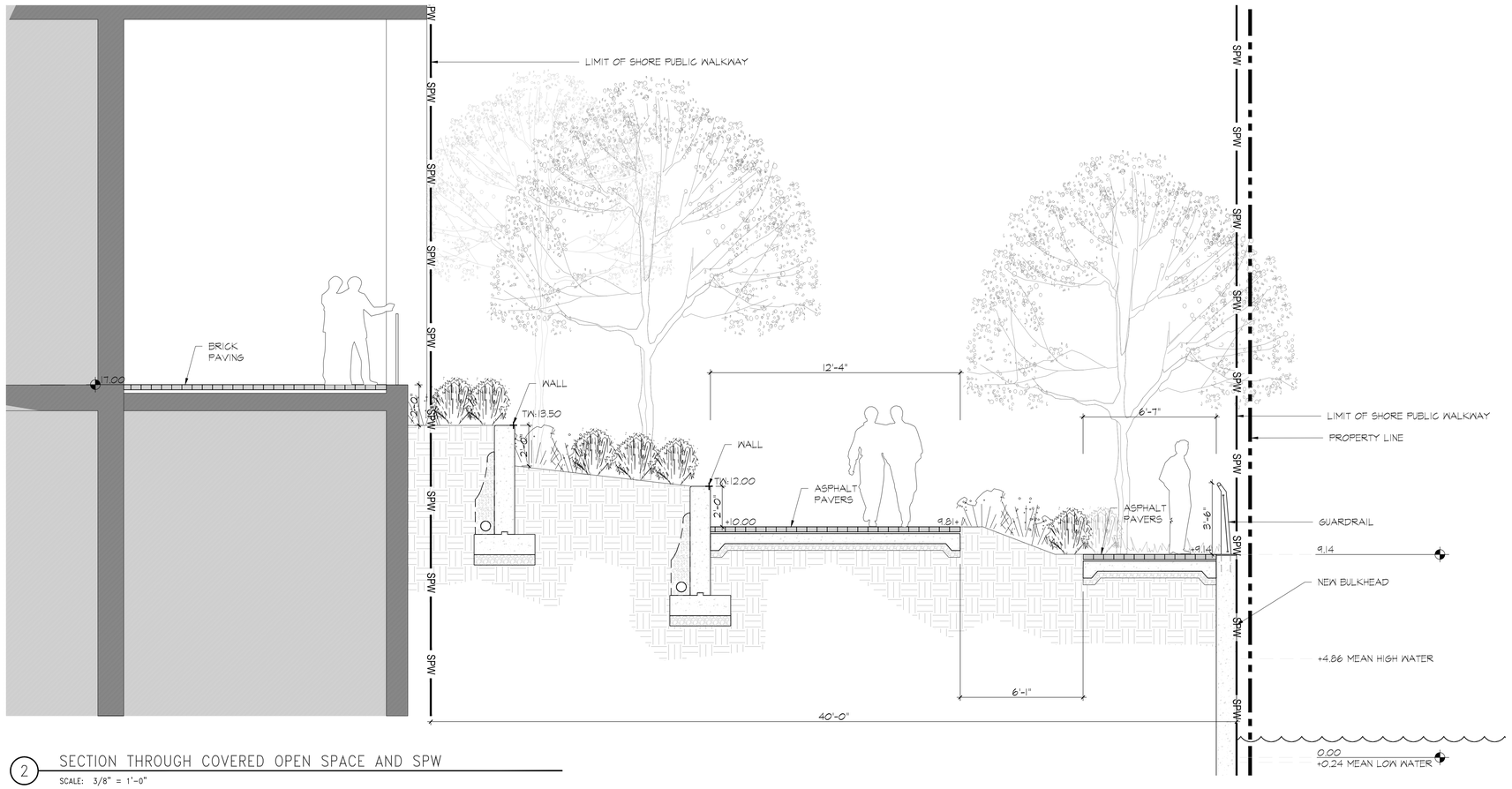

2 SECTION THROUGH COVERED OPEN SPACE AND SPW

SCALE: 3/8" = 1'-0"





OWNER
KENT MEMBER LLC
505 FLUSHING AVE, BROOKLYN, NY 11205

CIVIL / PARKING ENGINEER
PHILIB HABIB AND ASSOCIATES
102 MADISON AVE # 11, NEW YORK, NY 10016

LANDSCAPE ARCHITECT
MPFP
120 BROADWAY 20TH FL, NEW YORK, NY 10271

LIGHTING DESIGNER
ONE LUX STUDIO
158 WEST 29TH STREET, FL 10, NEW YORK, NY 10001

LAND USE CONSULTANT
HERRICK FEINSTEIN LLP
TWO PARK AVENUE, NEW YORK, NY 10016

REV	DATE	DESCRIPTION
	3/24/2021	ULURP SUBMISSION
	11/03/2021	ULURP SUBMISSION
	06/22/2022	ULURP SUBMISSION
	09/08/2022	ULURP SUBMISSION
	01/11/2023	DPR REVIEW
	03/22/2023	ULURP SUBMISSION
	07/14/2023	ULURP SUBMISSION
	10/2/2023	ULURP SUBMISSION
	10/20/23	ULURP SUBMISSION

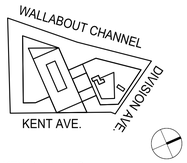

KEY PLAN:NTS

500 KENT

500 KENT AVENUE
BROOKLYN, NY 11249

ID #2019K0330

SECTIONS

SCALE:

DRAWING #:

L-500.00

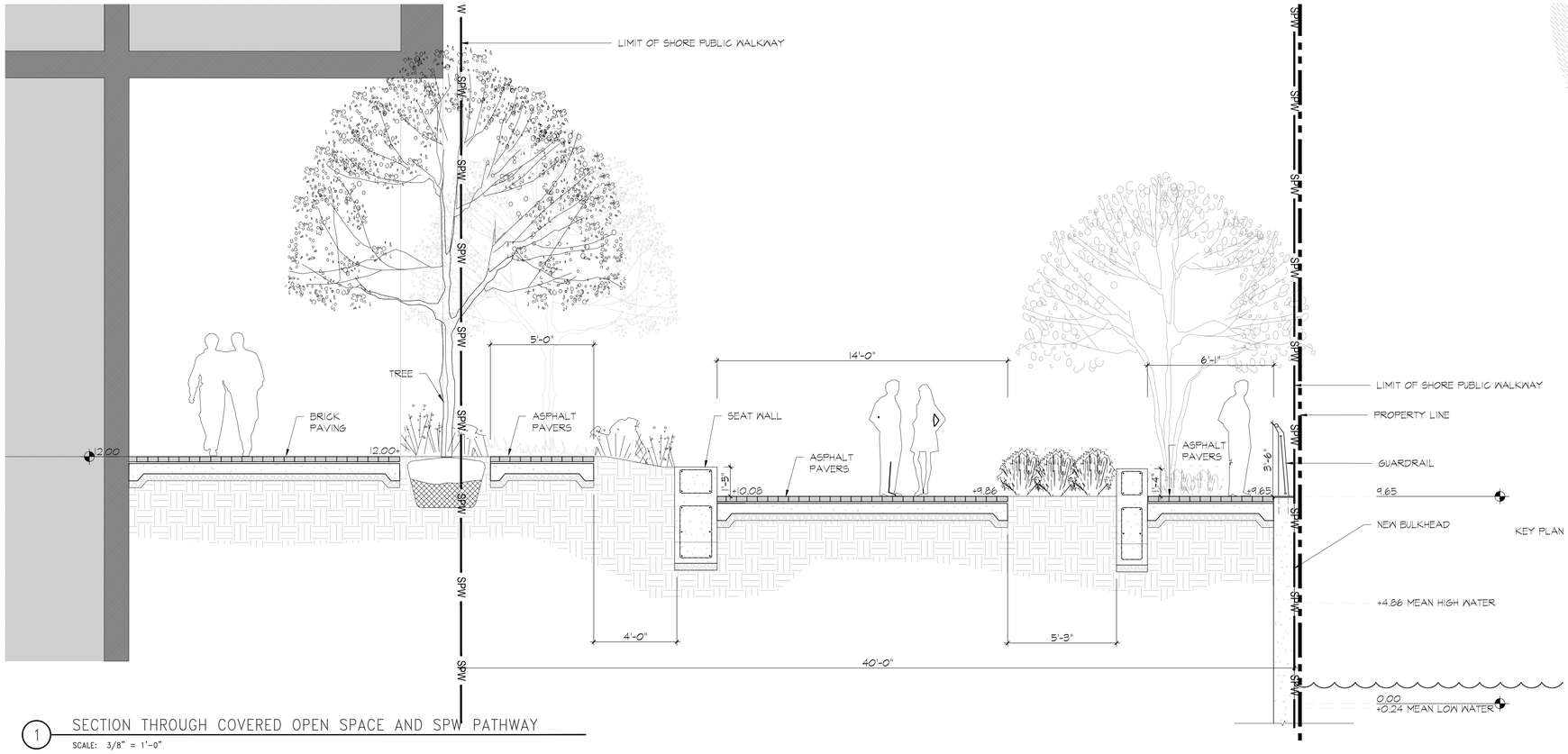

1 SECTION THROUGH COVERED OPEN SPACE AND SPW PATHWAY

SCALE: 3/8" = 1'-0"



KEY PLAN



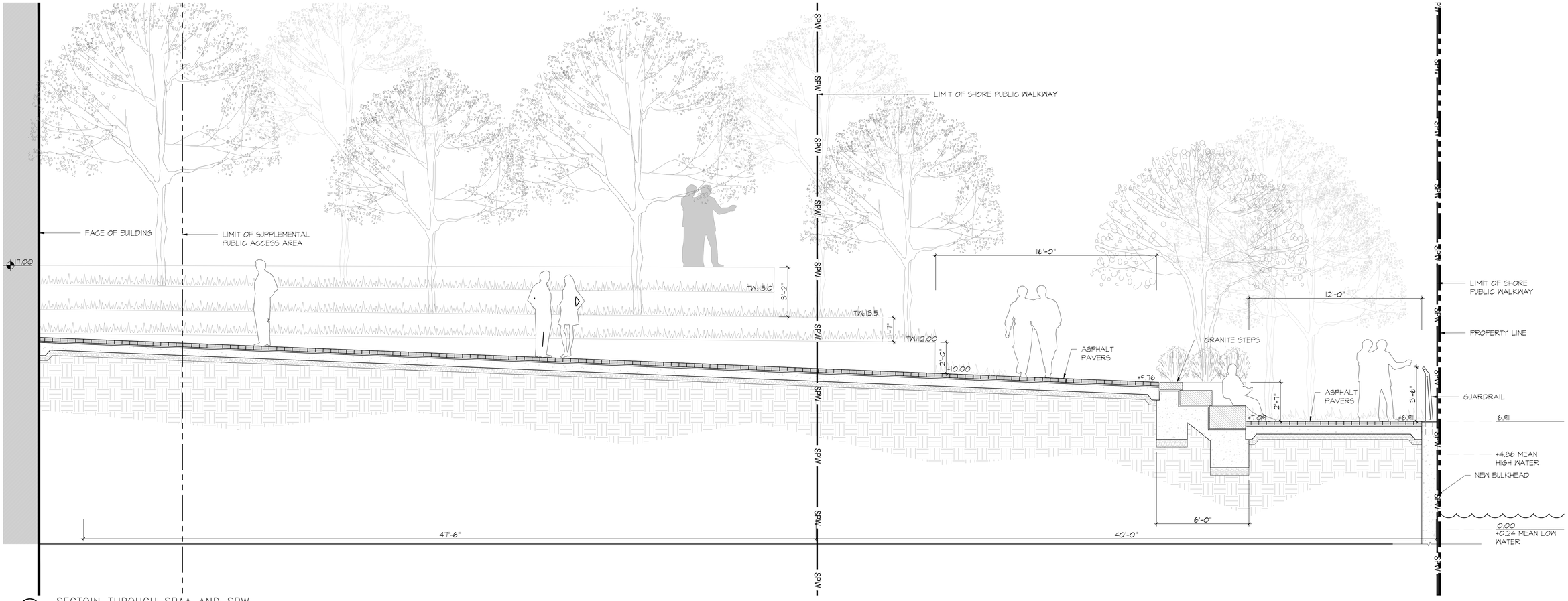

2 SECTOIN THROUGH SPAA AND SPW

SCALE: 3/8" = 1'-0"

OWNER
KENT MEMBER LLC
505 FLUSHING AVE, BROOKLYN, NY 11205

CIVIL / PARKING ENGINEER
PHILIB HABIB AND ASSOCIATES
102 MADISON AVE # 11, NEW YORK, NY 10016

LANDSCAPE ARCHITECT
MPFP
120 BROADWAY 20TH FL, NEW YORK, NY 10271

LIGHTING DESIGNER
ONE LUX STUDIO
158 WEST 29TH STREET, FL 10, NEW YORK, NY 10001

LAND USE CONSULTANT
HERRICK FEINSTEIN LLP
TWO PARK AVENUE, NEW YORK, NY 10016

REV	DATE	DESCRIPTION
	3/24/2021	ULURP SUBMISSION
	11/03/2021	ULURP SUBMISSION
	06/22/2022	ULURP SUBMISSION
	09/08/2022	ULURP SUBMISSION
	01/11/2023	DPR REVIEW
	03/22/2023	ULURP SUBMISSION
	07/14/2023	ULURP SUBMISSION
	10/2/2023	ULURP SUBMISSION
	10/20/23	ULURP SUBMISSION

WALLABOUT CHANNEL
DIVISION AVE.
KENT AVE.

KEY PLAN:NTS

500 KENT

500 KENT AVENUE
BROOKLYN, NY 11249
ID #2019K0330

SECTIONS

SCALE:

DRAWING #:
L-501.00

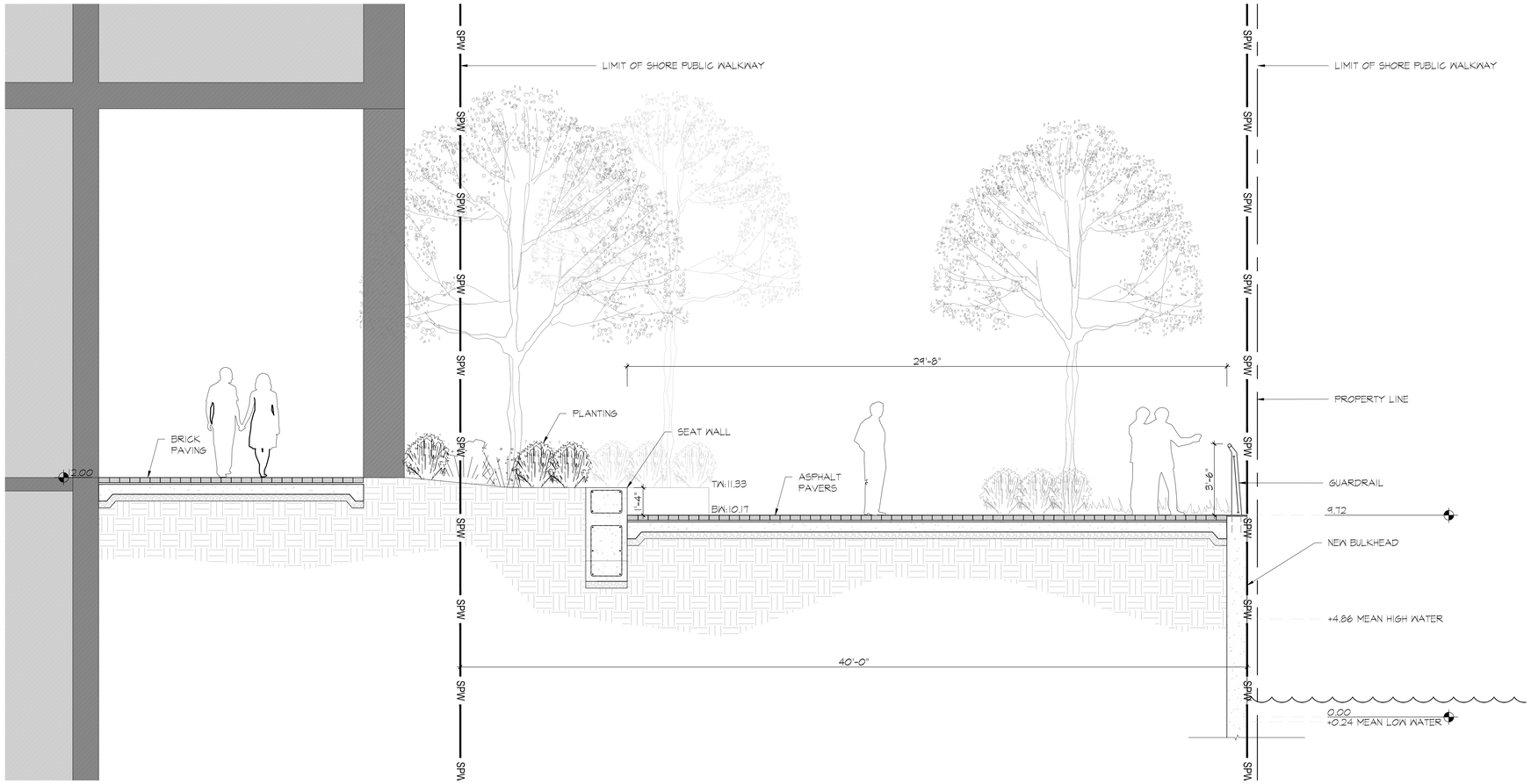

1 SECTION THROUGH COVERED OPEN SPACE AND SPW

SCALE: 3/8" = 1'-0"



KEY PLAN



OWNER
KENT MEMBER LLC
505 FLUSHING AVE, BROOKLYN, NY 11205

CIVIL / PARKING ENGINEER
PHILIB HABIB AND ASSOCIATES
102 MADISON AVE # 11, NEW YORK, NY 10016

LANDSCAPE ARCHITECT
MPFP
120 BROADWAY 20TH FL, NEW YORK, NY 10271

LIGHTING DESIGNER
ONE LUX STUDIO
158 WEST 29TH STREET, FL 10, NEW YORK, NY 10001

LAND USE CONSULTANT
HERRICK FEINSTEIN LLP
TWO PARK AVENUE, NEW YORK, NY 10016

REV	DATE	DESCRIPTION
	3/24/2021	ULURP SUBMISSION
	11/03/2021	ULURP SUBMISSION
	06/22/2022	ULURP SUBMISSION
	09/08/2022	ULURP SUBMISSION
	01/11/2023	DPR REVIEW
	03/22/2023	ULURP SUBMISSION
	07/14/2023	ULURP SUBMISSION
	10/2/2023	ULURP SUBMISSION
	10/20/23	ULURP SUBMISSION

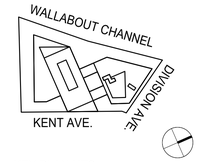

KEY PLAN:NTS

500 KENT

500 KENT AVENUE
BROOKLYN, NY 11249
ID #2019K0330

SECTIONS

SCALE:

DRAWING #:
L-502.00

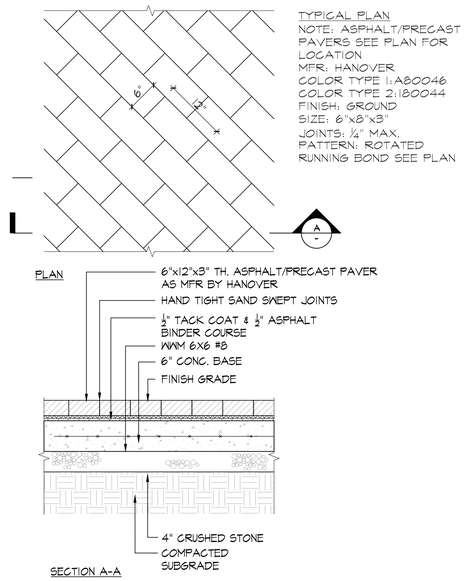

1 PAVERS ON GRADE DETAIL

SCALE: 1"=1'-0"

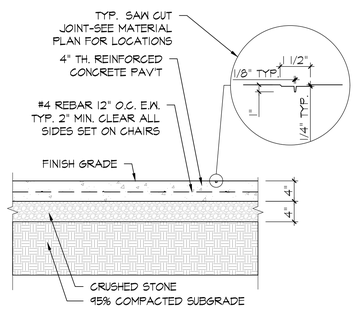

2 PEDESTRIAN CONCRETE DETAIL

SCALE: 1"=1'-0"

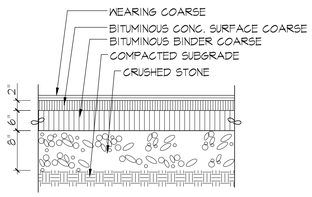

3 ASPHALT PAVING DETAIL

SCALE: 1"=1'-0"

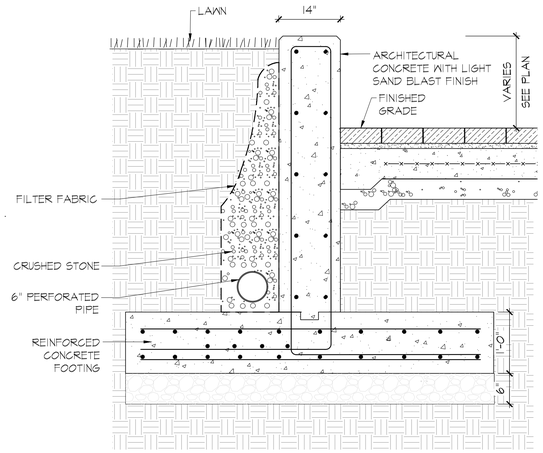

4 WALL DETAIL

SCALE: 1"=1'-0"

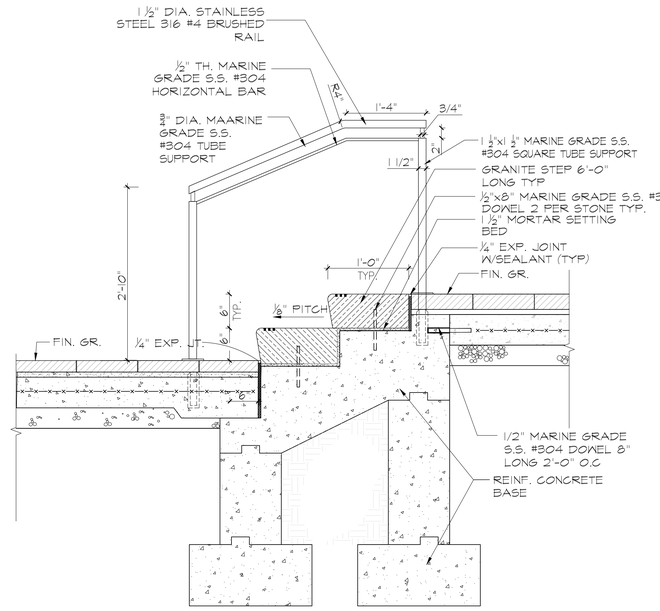

5 TYP. STAIR DETAIL

SCALE: 1"=1'-0"

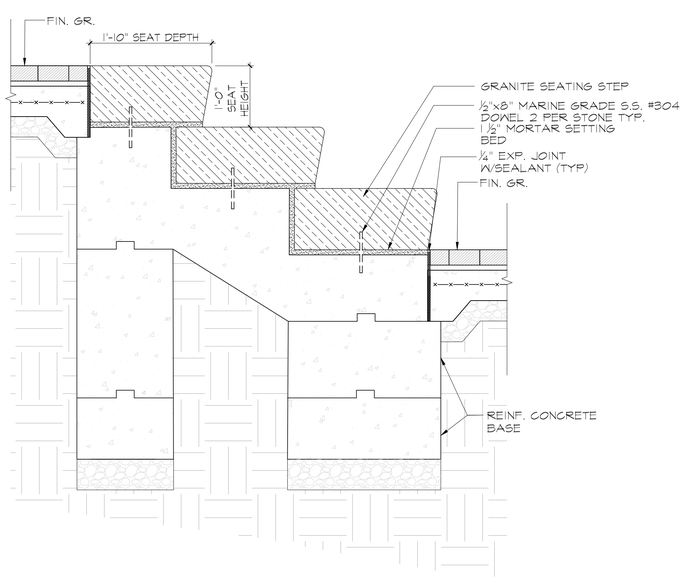

6 TYP. SEATING STEP DETAIL

SCALE: 1"=1'-0"



OWNER
KENT MEMBER LLC
505 FLUSHING AVE, BROOKLYN, NY 11205

CIVIL / PARKING ENGINEER
PHILIB HABIB AND ASSOCIATES
102 MADISON AVE # 11, NEW YORK, NY 10016

LANDSCAPE ARCHITECT
MPFP
120 BROADWAY 20TH FL, NEW YORK, NY 10271

LIGHTING DESIGNER
ONE LUX STUDIO
158 WEST 29TH STREET, FL 10, NEW YORK, NY 10001

LAND USE CONSULTANT
HERRICK FEINSTEIN LLP
TWO PARK AVENUE, NEW YORK, NY 10016

REV	DATE	DESCRIPTION
	3/24/2021	ULURP SUBMISSION
	11/03/2021	ULURP SUBMISSION
	06/22/2022	ULURP SUBMISSION
	09/08/2022	ULURP SUBMISSION
	01/11/2023	DPR REVIEW
	03/22/2023	ULURP SUBMISSION
	07/14/2023	ULURP SUBMISSION
	10/2/2023	ULURP SUBMISSION
	10/20/23	ULURP SUBMISSION

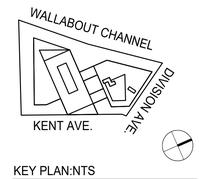

KEY PLAN:NTS

500 KENT

500 KENT AVENUE
BROOKLYN, NY 11249

ID #2019K0330

DETAILS

SCALE:

DRAWING #:

L-600.00

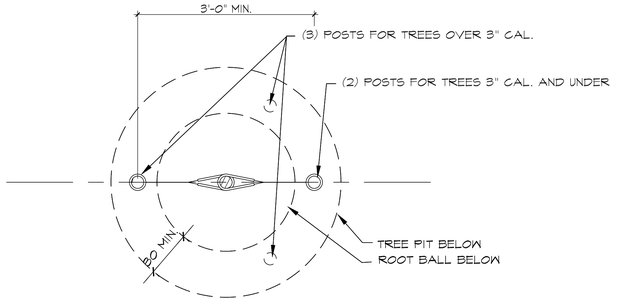

1 TREE PLANTING DETAIL ON GRADE

SCALE: 3/4"=1'-0"

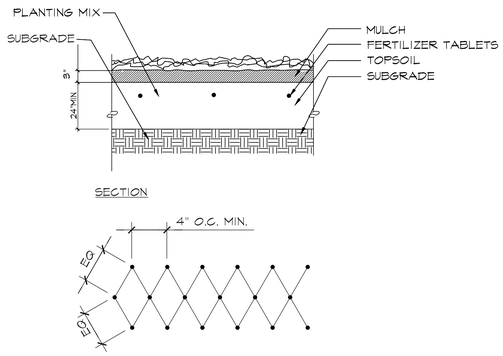

2 GROUNDCOVER PLANTING DETAIL

SCALE: 3/4"=1'-0"

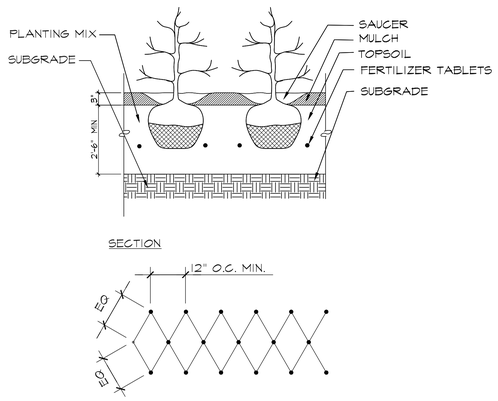

3 SHRUB PLANTING DETAIL

SCALE: 3/4"=1'-0"

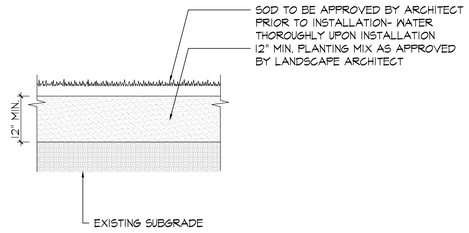

4 LAWN PLANTING DETAIL

SCALE: 3/4"=1'-0"

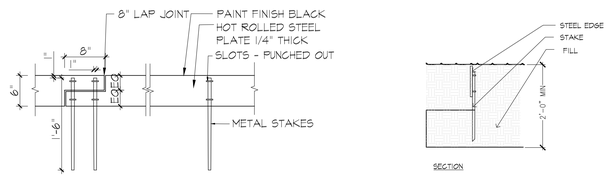

NOTE:
1. ALL ANGLES, ARCS RADII SHALL BE MECHANICALLY BENT.
2. ALL 90 DEGREE CORNERS AT PAVEMENT SHALL BE MECHANICALLY BENT.
3. ALTERNATIVELY WELD ALL CORNERS.
4. ALL CONNECTIONS FROM EDGE TO EDGE MUST HAVE A POSITIVE CONNECTION.

5 STEEL EDGE

SCALE: 1"=1'-0"



OWNER
KENT MEMBER LLC
505 FLUSHING AVE, BROOKLYN, NY 11205

CIVIL / PARKING ENGINEER
PHILIB HABIB AND ASSOCIATES
102 MADISON AVE # 11, NEW YORK, NY 10016

LANDSCAPE ARCHITECT
MPFP
120 BROADWAY 20TH FL, NEW YORK, NY 10271

LIGHTING DESIGNER
ONE LUX STUDIO
158 WEST 29TH STREET, FL 10, NEW YORK, NY 10001

LAND USE CONSULTANT
HERRICK FEINSTEIN LLP
TWO PARK AVENUE, NEW YORK, NY 10016

REV	DATE	DESCRIPTION
	3/24/2021	ULURP SUBMISSION
	11/03/2021	ULURP SUBMISSION
	06/22/2022	ULURP SUBMISSION
	09/08/2022	ULURP SUBMISSION
	01/11/2023	DPR REVIEW
	03/22/2023	ULURP SUBMISSION
	07/14/2023	ULURP SUBMISSION
	10/2/2023	ULURP SUBMISSION
	10/20/23	ULURP SUBMISSION

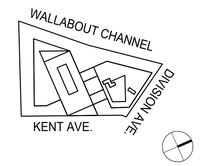

KEY PLAN:NTS

500 KENT

500 KENT AVENUE
BROOKLYN, NY 11249

ID #2019K0330

PLANTING DETAILS

SCALE:

DRAWING #:

L-601.00

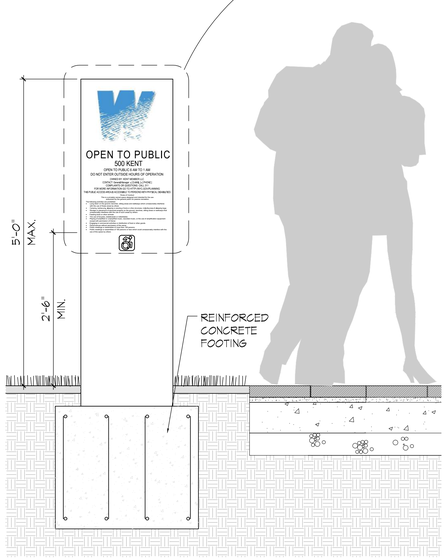

1 OPEN SPACE SIGN DETAIL

SCALE: 1"=1'-0"



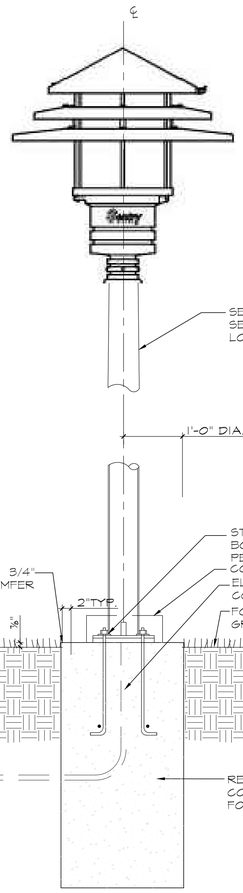

5 LIGHTPOLE MOUNTING DETAIL

SCALE: 1"=1'-0"



MFG: BY LUMEC
MODEL: CANDELA POLE HEAD
COLOR: POWER COAT FINISH RAL 9006 (MATTE/SILVER)

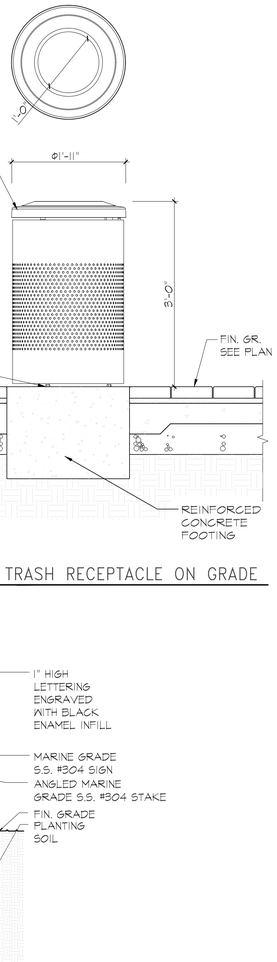

3 DPR PREFERRED TRASH RECEPTACLE ON GRADE

SCALE: 1"=1'-0"



SURFACE MOUNTED LITTER RECEPTACLE
MFR: MAGLIN
MODEL: 600
GALLONS: 32
COLOR: SILVER 14 GLOSS

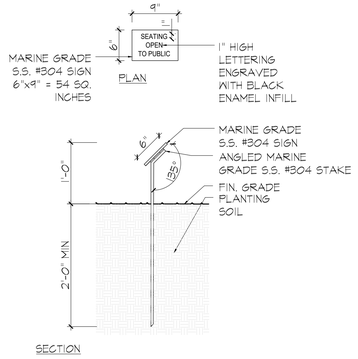

2 SEATING SIGN DETAIL

SCALE: 1"=1'-0"

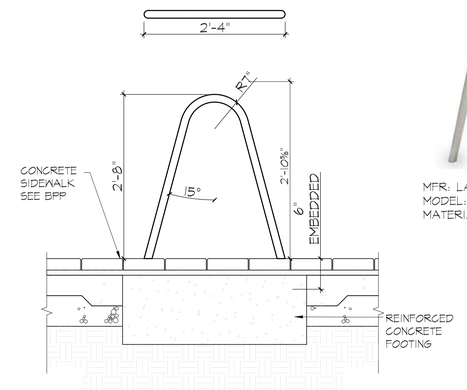



MFR: LANDSCAPE FORMS
MODEL: BOLA
MATERIAL: STAINLESS STEEL

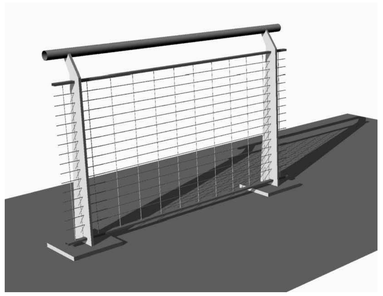

4 BIKE RACK DETAIL

SCALE: 1"=1'-0"

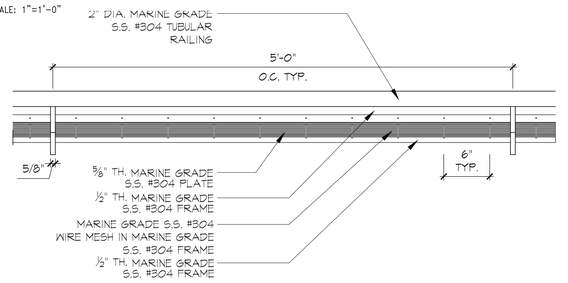

6 GUARDRAIL

SCALE: 1-1/2"=1'-0"



OWNER
KENT MEMBER LLC
505 FLUSHING AVE, BROOKLYN, NY 11205

CIVIL / PARKING ENGINEER
PHILIB HABIB AND ASSOCIATES
102 MADISON AVE # 11, NEW YORK, NY 10016

LANDSCAPE ARCHITECT
MPFP
120 BROADWAY 20TH FL, NEW YORK, NY 10271

LIGHTING DESIGNER
ONE LUX STUDIO
158 WEST 29TH STREET, FL 10, NEW YORK, NY 10001

LAND USE CONSULTANT
HERRICK FEINSTEIN LLP
TWO PARK AVENUE, NEW YORK, NY 10016

REV	DATE	DESCRIPTION
	3/24/2021	ULURP SUBMISSION
	11/03/2021	ULURP SUBMISSION
	06/22/2022	ULURP SUBMISSION
	09/08/2022	ULURP SUBMISSION
	01/11/2023	DPR REVIEW
	03/22/2023	ULURP SUBMISSION
	07/14/2023	ULURP SUBMISSION
	10/2/2023	ULURP SUBMISSION
	10/20/23	ULURP SUBMISSION

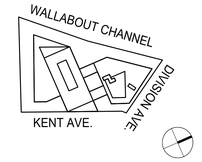

KEY PLAN:NTS

500 KENT

500 KENT AVENUE
BROOKLYN, NY 11249
ID #2019K0330

SITE DETAILS

SCALE:

DRAWING #:
L-602.00

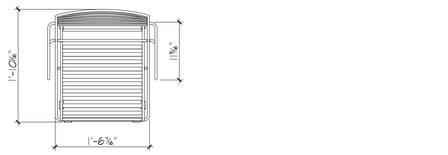

MOVEABLE CHAIRS
MODEL: PARC CENTRE
FIN: STEEL
MANUFACTURE:
Landscape Forms, Inc.
431 Lanndale Ave. Kalamazoo, MI 49048
269.381.3455 fax 800.521.2546 phone
www.landscapeforms.com

NOTE:
1. CHAIRS TO BE TETHERED TO TABLE

1 MOVEABLE CHAIRS

SCALE: 1"=1'-0"

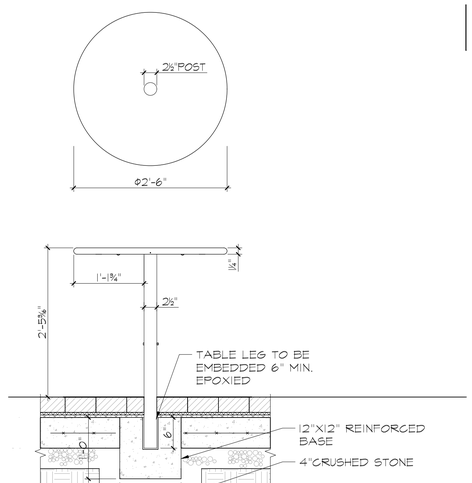

FIXED TABLE
SIZE: 30" ROUND TABLE SURFACE MOUNTED
MODEL: CANTENA
FIN: STEEL
MANUFACTURE:
Landscape Forms, Inc.
431 Lanndale Ave. Kalamazoo, MI 49048
269.381.3455 fax 800.521.2546 phone
www.landscapeforms.com

2 FIXED TABLES

SCALE: 1"=1'-0"

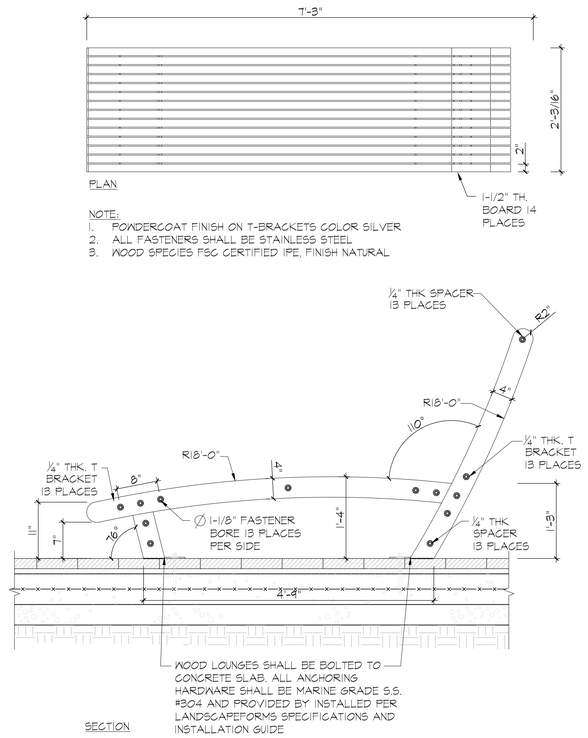

3 CHAISE LOUNGE

SCALE: 1"=1'-0"

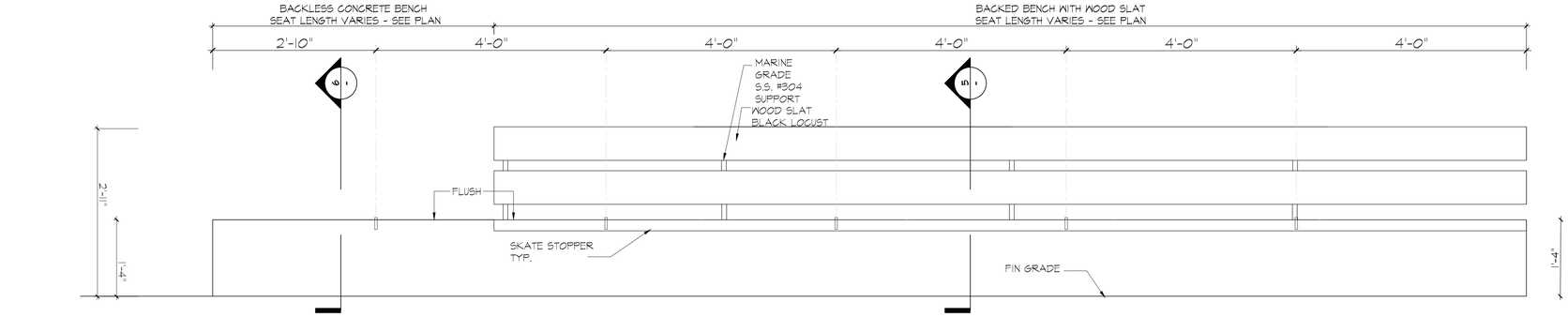

4 BENCH ELEVATION

SCALE: 1"=1'-0"

5 BACKLESS BENCH SECTION

SCALE: 1"=1'-0"

6 BACKED BENCH SECTION

SCALE: 1"=1'-0"

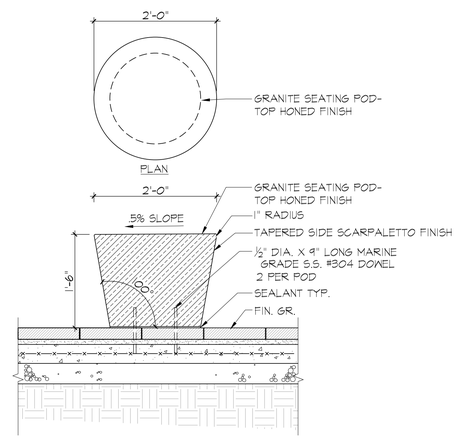

7 SEATING POD

SCALE: 1"=1'-0"

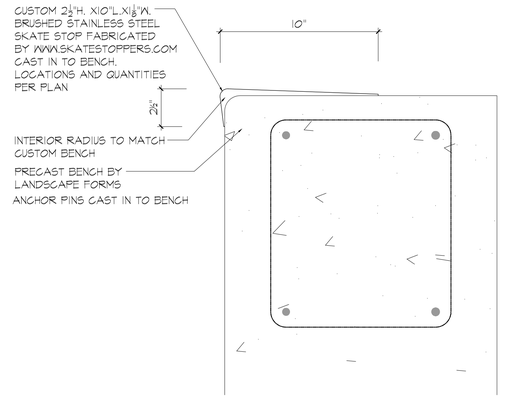

8 SKATE STOPPER DETAIL

SCALE: 3"=1'-0"



OWNER
KENT MEMBER LLC
505 FLUSHING AVE, BROOKLYN, NY 11205

CIVIL / PARKING ENGINEER
PHILIB HABIB AND ASSOCIATES
102 MADISON AVE # 11, NEW YORK, NY 10016

LANDSCAPE ARCHITECT
MPFP
120 BROADWAY 20TH FL, NEW YORK, NY 10271

LIGHTING DESIGNER
ONE LUX STUDIO
158 WEST 29TH STREET, FL 10, NEW YORK, NY 10001

LAND USE CONSULTANT
HERRICK FEINSTEIN LLP
TWO PARK AVENUE, NEW YORK, NY 10016

REV	DATE	DESCRIPTION
	3/24/2021	ULURP SUBMISSION
	11/03/2021	ULURP SUBMISSION
	06/22/2022	ULURP SUBMISSION
	09/08/2022	ULURP SUBMISSION
	01/11/2023	DPR REVIEW
	03/22/2023	ULURP SUBMISSION
	07/14/2023	ULURP SUBMISSION
	10/2/2023	ULURP SUBMISSION
	10/20/23	ULURP SUBMISSION

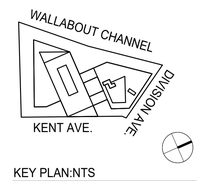

KEY PLAN:NTS

500 KENT

500 KENT AVENUE
BROOKLYN, NY 11249

ID #2019K0330

SEATING DETAILS

SCALE:

DRAWING #:
L-603.00