equity environmental engineering

WORKING TOGETHER TO DESIGN SOLUTIONS

ENVIRONMENTAL ASSESSMENT STATEMENT (EAS) AND SUPPLEMENTAL STUDIES TO THE EAS

Lead Agency:
Department of City Planning
120 Broadway, 31st Floor
New York, NY 10271

Prepared for:
JPP 33rd Street LLC & Lily & John Realty Inc

Prepared by:
Equity Environmental
500 International Drive, Suite 150, Mount Olive, NJ
4 World Trade Center, Suite 1963, New York, NY
www.equityenvironmental.com

February 10, 2022

11th Street and 34th Avenue Rezoning

Queens, NY

Block 318, Lots 1, 9, 11, 15, and 22

CEQR Reference No: 21DCP118Q

TABLE OF CONTENTS

1. Project Description 1
1.1 Introduction 1
1.2 Background 2
1.3 Description of the Surrounding Area 3
1.4 Description of the Affected Area 4
1.5 Description of the Proposed Development 5
1.6 Action(s) Necessary to Facilitate the Project 6
1.7 Purpose and Need 6
1.8 Analysis Framework 7
2. Environmental Review 13
Chapter 4: Land Use, Zoning, and Public Policy 13
Land Use 13
Zoning 18
Public Policy 23
Chapter 5: Socioeconomic Conditions 35
Proposed Project Overview 36
Preliminary Socioeconomic Assessment 37
Indirect Residential Displacement Analysis 38
Housing Rent and Household Income 55
Chapter 6: Community Facilities 59
Preliminary Screening 59
Primary and Intermediate Schools – Detailed Assessment 60
Chapter 7: Open Space 67
Preliminary Open Space Assessment 68
Indirect Public Open Space Impact Analysis 68
Total Population Change 72
Open Space Resources 74
Chapter 8: Shadows 80
Tier 1 Shadow Screening Assessment 81
Tier 2 Shadow Screening Assessment 84
Tier 3 Shadow Screening Assessment 86
Detailed Shadow Analysis 91
Determination of Shadow Impact Significance 95
Chapter 9 Historic and Cultural Resources 97

Architectural Resources 97
Cultural and Archaeological Resources 100
Chapter 10: Urban Design and Visual Resources 102
Chapter 12: Hazardous Materials 128
Analysis 128
Chapter 16: Transportation 131
Preliminary Assessment 133
Transportation Analysis Methodology 152
Detailed Traffic Analysis 157
Detailed Pedestrian Analysis 177
Parking Assessment 186
Vehicular and Pedestrian Safety Assessment 190
Project Improvement Measures 191
Chapter 17: Air Quality 196
Air Pollutants and Applicable Standards/Guidelines 196
Mobile Sources 198
Stationary Source 208
Chapter 19: Noise 218
Existing Conditions 226
Mobile Source Noise Analysis 228
Stationary Source 235
Determination of Impacts/Building Attenuation Requirements 235
Chapter 21: Neighborhood Character 239
Preliminary Analysis 239
Chapter 22: Construction 244
Transportation 247
Air Quality and Noise 253
Historic and Cultural Resources 262

Appendices

Appendix A: Agency Correspondence
Appendix B: Architectural Plans
Appendix C: Noise Data
Appendix D: WRP CAF & Flood Evaluation Worksheet
Appendix E: Transportation
Appendix F: Construction

EAS LONG FORM

City Environmental Quality Review
ENVIRONMENTAL ASSESSMENT STATEMENT (EAS) FULL FORM

Please fill out and submit to the appropriate agency (see instructions)

Part I: GENERAL INFORMATION

PROJECT NAME 11th Street and 34th Avenue Rezoning

1. *Reference Numbers*

CEQR REFERENCE NUMBER (to be assigned by lead agency)	BSA REFERENCE NUMBER (if applicable)
21DCP118Q	
ULURP REFERENCE NUMBER (if applicable)	OTHER REFERENCE NUMBER(S) (if applicable) (*e.g.*, legislative intro, CAPA)
210234ZMQ; N210235ZRQ	

2a. *Lead Agency Information*			**2b. *Applicant Information***		
NAME OF LEAD AGENCY			NAME OF APPLICANT		
Department of City Planning (DCP)			JPP 33rd Street LLC and Lily and John Realty Inc		
NAME OF LEAD AGENCY CONTACT PERSON			NAME OF APPLICANT'S REPRESENTATIVE OR CONTACT PERSON		
Stephanie Shellooe, Director, EARD			Kevin Williams		
ADDRESS 120 Broadway, 31st Floor			ADDRESS 500 International Drive		
CITY New York	STATE NY	ZIP 10271	CITY Mount Olive	STATE NJ	ZIP 07828
TELEPHONE 212-720-3328	EMAIL sshellooe@planning.nyc.gov		TELEPHONE 973-527-7451	EMAIL kevin.williams@equityenvironmental.com	

3. *Action Classification and Type*

SEQRA Classification

☒ UNLISTED ☐ TYPE I: Specify Category (see 6 NYCRR 617.4 and NYC Executive Order 91 of 1977, as amended):

Action Type (refer to CEQR Technical Manual Chapter 2, "Establishing the Analysis Framework" for guidance)

☐ LOCALIZED ACTION, SITE SPECIFIC ☐ LOCALIZED ACTION, SMALL AREA ☒ GENERIC ACTION

4. *Project Description*

The Applicant is seeking the approval of a zoning map amendment and two zoning text amendments (Proposed Actions) to facilitate the development of 33-33/33-51 11th Street (Block 318, Lots 15 and 22) and 33-80 12th Street (Block 318, Lot 1) with two mixed-use nine-story buildings, including a mixed commercial and residential building on Block 318 Lots 15 and 22 and a mixed-use commercial, community facility, industrial/manufacturing, and residential building on Block 318 Lot 1.

The zoning map amendment would rezone Block 318, Lots 1, 9, 11, 15, and 22 from an R5 zoning district to an M1-5/R6A zoning district. The zoning text amendments include modifying Zoning Resolution Article 12, Chapter 3 to establish an MX district and to increase the maximum permitted height to 95 feet and the maximum base height to 75 feet, and modifying Appendix F, Queens CD 1 map to establish an MIH Area.

The Proposed Actions would facilitate the development of two separate buildings:
Proposed Development Site 1 would be improved with an 8-story 95-foot-tall mixed commercial and residential building of 338,474 GSF (284,331 ZSF; 4.98 FAR), including 204,831 GSF of residential, 90,251 GSF of commercial, and 43,392 GSF of cellar level parking. The building would contain 204 dwelling units (approximately 1,000 GSF average size), approximately 61 of which would be permanently set aside per MIH Option 2. Proposed commercial uses would include 11,955 GSF of local retail stores (UG 6), 6,552 GSF for an artist's studio (UG 9), and 71,744 GSF for two trade schools and accessory offices (UG 9). 100 parking spaces would be required for the residential uses, and 100 spaces would be provided in the 43,392 GSF enclosed garage at cellar level.

Proposed Development Site 2 would be an 8-story, 95-foot-tall mixed-use commercial, community facility, industrial/manufacturing, and residential building. The building would contain 248,095 GSF (207,201 ZSF; 4.99 FAR), including 149,677 GSF of residential (148 dwelling units, approximately 44 of which would be permanently set aside per MIH Option 2), 35,988 GSF of commercial, 10,000 GSF of community facility, 27,109 GSF of manufacturing, and 25,321 GSF of cellar level parking. The ground floor would contain 12,086 GSF of local retail store uses (UG 6) and 27,109 GSF of

food distribution warehouse uses (UG 16; no manufacturing on site), the second floor would contain 10,000 GSF of community facility (UG 4) and 23,902 GSF of general office uses, and floors three through nine would contain 149,677 GSF of residential uses. 60 residential accessory parking spaces would be required, and 60 would be provided at cellar level accessible from a curb cut on 11th Street.

Project Location

BOROUGH Queens	COMMUNITY DISTRICT(S) 1	STREET ADDRESS 33-33/33-51/33-67/33-71 11th Street, 33-80 12th Street
TAX BLOCK(S) AND LOT(S) Block 318, Lots 1, 9, 11, 15, 22		ZIP CODE 11106

DESCRIPTION OF PROPERTY BY BOUNDING OR CROSS STREETS The Affected Area is bounded by 33rd Road to the north, 12th Street to the east, 34th Avenue to the south, and 11th Street to the west.

EXISTING ZONING DISTRICT, INCLUDING SPECIAL ZONING DISTRICT DESIGNATION, IF ANY R5 | ZONING SECTIONAL MAP NUMBER 9a

5. *Required Actions or Approvals* (check all that apply)

***City Planning Commission*:** ☒ YES ☐ NO ☐ UNIFORM LAND USE REVIEW PROCEDURE (ULURP)

- ☐ CITY MAP AMENDMENT
- ☒ ZONING MAP AMENDMENT
- ☒ ZONING TEXT AMENDMENT
- ☐ SITE SELECTION—PUBLIC FACILITY
- ☐ HOUSING PLAN & PROJECT
- ☐ SPECIAL PERMIT (if appropriate, specify type: ☐ modification; ☐ renewal; ☐ other); EXPIRATION DATE:

SPECIFY AFFECTED SECTIONS OF THE ZONING RESOLUTION

- ☐ ZONING CERTIFICATION
- ☐ ZONING AUTHORIZATION
- ☐ ACQUISITION—REAL PROPERTY
- ☐ DISPOSITION—REAL PROPERTY
- ☐ OTHER, explain:

- ☐ CONCESSION
- ☐ UDAAP
- ☐ REVOCABLE CONSENT
- ☐ FRANCHISE

***Board of Standards and Appeals*:** ☐ YES ☒ NO

- ☐ VARIANCE (use)
- ☐ VARIANCE (bulk)
- ☐ SPECIAL PERMIT (if appropriate, specify type: ☐ modification; ☐ renewal; ☐ other); EXPIRATION DATE:

SPECIFY AFFECTED SECTIONS OF THE ZONING RESOLUTION

***Department of Environmental Protection*:** ☐ YES ☒ NO ☐ Cogeneration Facility ☐ Title V Permit

Other City Approvals Subject to CEQR (check all that apply)

- ☐ LEGISLATION
- ☐ RULEMAKING
- ☐ CONSTRUCTION OF PUBLIC FACILITIES
- ☐ 384(b)(4) APPROVAL
- ☐ OTHER, explain:

- ☐ FUNDING OF CONSTRUCTION, specify:
- ☐ POLICY OR PLAN, specify:
- ☐ FUNDING OF PROGRAMS, specify:
- ☐ PERMITS, specify:

Other City Approvals Not Subject to CEQR (check all that apply)

- ☐ PERMITS FROM DOT'S OFFICE OF CONSTRUCTION MITIGATION AND COORDINATION (OCMC)
- ☐ LANDMARKS PRESERVATION COMMISSION APPROVAL
- ☐ OTHER, explain:

***State or Federal Actions/Approvals/Funding*:** ☐ YES ☒ NO If "yes," specify:

6. *Site Description:* *The directly affected area consists of the project site and the area subject to any change in regulatory controls. Except where otherwise indicated, provide the following information with regard to the directly affected area.*

***Graphics*:** *The following graphics must be attached and each box must be checked off before the EAS is complete. Each map must clearly depict the boundaries of the directly affected area or areas and indicate a 400-foot radius drawn from the outer boundaries of the project site. Maps may not exceed 11 x 17 inches in size and, for paper filings, must be folded to 8.5 x 11 inches.*

- ☒ SITE LOCATION MAP
- ☒ TAX MAP
- ☒ ZONING MAP
- ☒ FOR LARGE AREAS OR MULTIPLE SITES, A GIS SHAPE FILE THAT DEFINES THE PROJECT SITE(S)
- ☐ SANBORN OR OTHER LAND USE MAP
- ☒ PHOTOGRAPHS OF THE PROJECT SITE TAKEN WITHIN 6 MONTHS OF EAS SUBMISSION AND KEYED TO THE SITE LOCATION MAP

Physical Setting (both developed and undeveloped areas)

Total directly affected area (sq. ft.): 107,220 | Waterbody area (sq. ft.) and type:

Roads, buildings, and other paved surfaces (sq. ft.): | Other, describe (sq. ft.):

7. *Physical Dimensions and Scale of Project* (if the project affects multiple sites, provide the total development facilitated by the action)

SIZE OF PROJECT TO BE DEVELOPED (gross square feet): 586,569

NUMBER OF BUILDINGS: 2 | GROSS FLOOR AREA OF EACH BUILDING (sq. ft.): 338,474; 248,095

HEIGHT OF EACH BUILDING (ft.): 95 | NUMBER OF STORIES OF EACH BUILDING: 8

Does the proposed project involve changes in zoning on one or more sites? ☒ YES ☐ NO

If "yes," specify: The total square feet owned or controlled by the applicant: 98,845

The total square feet not owned or controlled by the applicant: 8,555

Does the proposed project involve in-ground excavation or subsurface disturbance, including, but not limited to foundation work, pilings, utility lines, or grading? ☒ YES ☐ NO

If "yes," indicate the estimated area and volume dimensions of subsurface disturbance (if known):

AREA OF TEMPORARY DISTURBANCE: 98,665 sq. ft. (width x length) VOLUME OF DISTURBANCE: 986,650 cubic ft. (width x length x depth)

AREA OF PERMANENT DISTURBANCE: 98,665 sq. ft. (width x length)

8. *Analysis Year* CEQR Technical Manual Chapter 2

ANTICIPATED BUILD YEAR (date the project would be completed and operational): 2024

ANTICIPATED PERIOD OF CONSTRUCTION IN MONTHS: 27.5

WOULD THE PROJECT BE IMPLEMENTED IN A SINGLE PHASE? ☒ YES ☐ NO | IF MULTIPLE PHASES, HOW MANY?

BRIEFLY DESCRIBE PHASES AND CONSTRUCTION SCHEDULE: The analysis year for the Proposed Actions is 2024 based on an 18-month period for environmental review and ULURP processes, including overlapping construction for the two proposed buildings on Block 318, Lots 15 and 22 and Block 318, Lot 1.

9. *Predominant Land Use in the Vicinity of the Project* (check all that apply)

☒ RESIDENTIAL ☒ MANUFACTURING ☒ COMMERCIAL ☐ PARK/FOREST/OPEN SPACE ☐ OTHER, specify:

DESCRIPTION OF EXISTING AND PROPOSED CONDITIONS

The information requested in this table applies to the directly affected area. The directly affected area consists of the project site and the area subject to any change in regulatory control. The increment is the difference between the No-Action and the With-Action conditions.

	EXISTING CONDITION	NO-ACTION CONDITION	WITH-ACTION CONDITION	INCREMENT
LAND USE				
Residential	☐ YES ☒ NO	☐ YES ☒ NO	☒ YES ☐ NO	
If "yes," specify the following:				
Describe type of residential structures			Two 9-story multifamily	
No. of dwelling units			392	392
No. of low- to moderate-income units	7		78	78
Gross floor area (sq. ft.)			354,508	354,508
Commercial	☐ YES ☒ NO	☐ YES ☒ NO	☒ YES ☐ NO	
If "yes," specify the following:				
Describe type (retail, office, other)			Retail, Office, Trade School, Art Studio (UGs 6 and 9)	
Gross floor area (sq. ft.)			Retail: 24,041 Office: 23,902 Trade School: 71,744 Art Studio: 6,552	129,239
Manufacturing/Industrial	☒ YES ☐ NO	☒ YES ☐ NO	☒ YES ☐ NO	
If "yes," specify the following:				
Type of use	UG 16 Auto Repair and Food Distribution	UG 16 Auto Repair and Food Distribution	UG 16 Food Distribution	-67,566
Gross floor area (sq. ft.)	94,675	94,675	27,109	
Open storage area (sq. ft.)	NA	NA	NA	
If any unenclosed activities, specify:	NA	NA	NA	
Community Facility	☐ YES ☒ NO	☐ YES ☒ NO	☒ YES ☐ NO	
If "yes," specify the following:				
Type			UG 4 Community Center	
Gross floor area (sq. ft.)			10,000	10,000
Vacant Land	☐ YES ☒ NO	☐ YES ☒ NO	☐ YES ☒ NO	
If "yes," describe:				
Publicly Accessible Open Space	☐ YES ☐ NO	☐ YES ☐ NO	☐ YES ☐ NO	
If "yes," specify type (mapped City, State, or Federal parkland, wetland—mapped or otherwise known, other):				
Other Land Uses	☐ YES ☒ NO	☐ YES ☒ NO	☐ YES ☒ NO	
If "yes," describe:				
PARKING				
Garages	☐ YES ☒ NO	☐ YES ☐ NO	☒ YES ☐ NO	
If "yes," specify the following:				
No. of public spaces			0	0
No. of accessory spaces			160	160
Operating hours			24/7	
Attended or non-attended			Non attended	
Lots	☒ YES ☐ NO	☒ YES ☐ NO	☐ YES ☒ NO	
If "yes," specify the following:				
No. of public spaces	23	23		
No. of accessory spaces	0	0		
Operating hours	24/7	24/7		
Other (includes street parking)	☐ YES ☒ NO	☐ YES ☒ NO	☐ YES ☒ NO	
If "yes," describe:				

	EXISTING CONDITION	NO-ACTION CONDITION	WITH-ACTION CONDITION	INCREMENT
POPULATION				
Residents	☐ YES ☒ NO	☐ YES ☒ NO	☒ YES ☐ NO	
If "yes," specify number:			822	822
Briefly explain how the number of residents was calculated:	Dwelling units x 2.10 per 2015-2019 Census average household size in Queens CD 1			
Businesses	☒ YES ☐ NO	☒ YES ☐ NO	☒ YES ☐ NO	
If "yes," specify the following:				
No. and type	2 wholesale bakeries; 1 autobody; 1 software company; 1 parking lot, 1 logistics company; 1 construction company	2 wholesale bakeries; 1 autobody; 1 software company; 1 parking lot, 1 logistics company; 1 construction company	8 local retail; 1 food distributor; 2 trade schools; 1 art studio; 2 professional offices	
No. and type of workers by business	24 total (Employment data provided by Applicant)	24 total (Employment data provided by Applicant)	396 total (Use, employee, and visitor breakdown provided in appendex Excel Sheet)	372
No. and type of non-residents who are not workers				
Briefly explain how the number of businesses was calculated:				
Other (students, visitors, concert-goers, *etc.*)	☐ YES ☒ NO	☐ YES ☒ NO	☐ YES ☒ NO	
If any, specify type and number:				
Briefly explain how the number was calculated:	Employees: 3 employees per 1,000 SF for local retail, general community facility, and construction trade school; 1 employee per 25 DU; 1 employee per 50 attended parking spaces; 1 employee per 515 GSF for film trade school; 1 employee per 250 SF office use; ; 3 employees for food distributor use (actual employment information from Applicant); and 1 employee per 400 SF for artist studio			
ZONING				
Zoning classification	R5	R5	MX (M1-5/R6A)	
Maximum amount of floor area that can be developed	2.00	2.00	5.00	
Predominant land use and zoning classifications within land use study area(s) or a 400 ft. radius of proposed project	Industrial, commercial, community facility, residential; R5, R6, R6B/C1-3	Industrial, commercial, community facility, residential; R5, R6, R6B/C1-3	Industrial, commercial, community facility, residential; R5, R6, R6B/C1-3	
Attach any additional information that may be needed to describe the project. If your project involves changes that affect one or more sites not associated with a specific development, it is generally appropriate to include total development projections in the above table and attach separate tables outlining the reasonable development scenarios for each site.				

Part II: TECHNICAL ANALYSIS

INSTRUCTIONS: For each of the analysis categories listed in this section, assess the proposed project's impacts based on the thresholds and criteria presented in the CEQR Technical Manual. Check each box that applies.

- If the proposed project can be demonstrated not to meet or exceed the threshold, check the "no" box.
- If the proposed project will meet or exceed the threshold, or if this cannot be determined, check the "yes" box.
- For each "yes" response, provide additional analyses (and, if needed, attach supporting information) based on guidance in the CEQR Technical Manual to determine whether the potential for significant impacts exists. Please note that a "yes" answer does not mean that an EIS must be prepared—it means that more information may be required for the lead agency to make a determination of significance.
- The lead agency, upon reviewing Part II, may require an applicant to provide additional information to support the Full EAS Form. For example, if a question is answered "no," an agency may request a short explanation for this response.

	YES	NO
1. *LAND USE, ZONING, AND PUBLIC POLICY*: CEQR Technical Manual Chapter 4		
(a) Would the proposed project result in a change in land use different from surrounding land uses?	☒	☐
(b) Would the proposed project result in a change in zoning different from surrounding zoning?	☒	☐
(c) Is there the potential to affect an applicable public policy?	☒	☐
(d) If "yes," to (a), (b), and/or (c), complete a preliminary assessment and attach.		
(e) Is the project a large, publicly sponsored project?	☐	☒
○ If "yes," complete a PlaNYC assessment and attach.		
(f) Is any part of the directly affected area within the City's Waterfront Revitalization Program boundaries?	☒	☐
○ If "yes," complete the Consistency Assessment Form. See Appendix E		
2. *SOCIOECONOMIC CONDITIONS*: CEQR Technical Manual Chapter 5		
(a) Would the proposed project:		
○ Generate a net increase of more than 200 residential units *or* 200,000 square feet of commercial space?	☒	☐
▪ If "yes," answer *both* questions 2(b)(ii) and 2(b)(iv) below.		
○ Directly displace 500 or more residents?	☐	☒
▪ If "yes," answer questions 2(b)(i), 2(b)(ii), and 2(b)(iv) below.		
○ Directly displace more than 100 employees?	☐	☒
▪ If "yes," answer questions under 2(b)(iii) and 2(b)(iv) below.		
○ Affect conditions in a specific industry?	☐	☒
▪ If "yes," answer question 2(b)(v) below.		
(b) If "yes" to any of the above, attach supporting information to answer the relevant questions below. If "no" was checked for each category above, the remaining questions in this technical area do not need to be answered.		
i. Direct Residential Displacement		
○ If more than 500 residents would be displaced, would these residents represent more than 5% of the primary study area population?	☐	☒
○ If "yes," is the average income of the directly displaced population markedly lower than the average income of the rest of the study area population?	☐	☐
ii. Indirect Residential Displacement		
○ Would expected average incomes of the new population exceed the average incomes of study area populations?	☒	☐
○ If "yes:"		
▪ Would the population of the primary study area increase by more than 10 percent?	☐	☒
▪ Would the population of the primary study area increase by more than 5 percent in an area where there is the potential to accelerate trends toward increasing rents?	☐	☒
○ If "yes" to either of the preceding questions, would more than 5 percent of all housing units be renter-occupied and unprotected?	☐	☐
iii. Direct Business Displacement		
○ Do any of the displaced businesses provide goods or services that otherwise would not be found within the trade area, either under existing conditions or in the future with the proposed project?	☐	☒
○ Is any category of business to be displaced the subject of other regulations or publicly adopted plans to preserve,	☐	☒

	YES	NO
enhance, or otherwise protect it?		
iv. Indirect Business Displacement		
○ Would the project potentially introduce trends that make it difficult for businesses to remain in the area?	☐	☒
○ Would the project capture retail sales in a particular category of goods to the extent that the market for such goods would become saturated, potentially resulting in vacancies and disinvestment on neighborhood commercial streets?	☐	☒
v. Effects on Industry		
○ Would the project significantly affect business conditions in any industry or any category of businesses within or outside the study area?	☐	☒
○ Would the project indirectly substantially reduce employment or impair the economic viability in the industry or category of businesses?	☐	☒
3. *COMMUNITY FACILITIES*: CEQR Technical Manual Chapter 6		
(a) Direct Effects		
○ Would the project directly eliminate, displace, or alter public or publicly funded community facilities such as educational facilities, libraries, health care facilities, day care centers, police stations, or fire stations?	☐	☒
(b) Indirect Effects		
i. Early Childhood Programs		
○ Would the project result in 20 or more eligible children under age 6, based on the number of low or low/moderate income residential units? (See Table 6-1 in Chapter 6)	☐	☒
○ If "yes," would the project result in a collective utilization rate of the Early Childhood Programs in the study area that is greater than 100 percent?	☐	☐
○ If "yes," would the project increase the collective utilization rate by 5 percent or more from the No-Action scenario?	☐	☐
ii. Public Schools		
○ Would the project result in 50 or more elementary or middle school students, or 150 or more high school students based on number of residential units? (See Table 6-1 in Chapter 6)	☒	☐
○ If "yes," would the project result in a utilization rate of the elementary or middle schools that is equal to or greater than 100 percent?	☒	☐
○ If "yes," would the project generate 100 or more elementary or middle school students past the 100% utilization rate?	☐	☒
○ If "yes," would the project result in a utilization rate of the high schools that is equal to or greater than 100 percent?	☐	☐
○ If "yes," would the project increase the high school utilization rate by 5 percent or more from the No-Action scenario?	☐	☐
iii. Libraries		
○ Would the project result in a 5 percent or more increase in the ratio of residential units to library branches? (See Table 6-1 in Chapter 6)	☐	☒
○ If "yes," would the project increase the study area population by 5 percent or more from the No-Action levels?	☐	☐
○ If "yes," would the additional population impair the delivery of library services in the study area?	☐	☐
iv. Health Care Facilities		
○ Would the project result in the introduction of a sizeable new neighborhood?	☐	☒
○ If "yes," would the project affect the operation of health care facilities in the area?	☐	☐
v. Fire and Police Protection		
○ Would the project result in the introduction of a sizeable new neighborhood?	☐	☒
○ If "yes," would the project affect the operation of fire or police protection in the area?	☐	☐
4. *OPEN SPACE*: CEQR Technical Manual Chapter 7		
(a) Would the project change or eliminate existing open space?	☐	☒
(b) Would the project generate more than 200 additional residents or 500 additional employees?	☒	☐
5. *SHADOWS*: CEQR Technical Manual Chapter 8		
(a) Would the proposed project result in a net height increase of any structure of 50 feet or more?	☒	☐
(b) Would the proposed project result in any increase in structure height and be located adjacent to or across the street from a sunlight-sensitive resource?	☒	☐
(c) If "yes" to either of the above questions, attach supporting information explaining whether the project's shadow would reach any sunlight-sensitive resource at any time of the year. See analysis		

	YES	NO
6. *HISTORIC AND CULTURAL RESOURCES*: CEQR Technical Manual Chapter 9		
(a) Does the proposed project site or an adjacent site contain any architectural and/or archaeological resource that is eligible for or has been designated (or is calendared for consideration) as a New York City Landmark, Interior Landmark or Scenic Landmark; that is listed or eligible for listing on the New York State or National Register of Historic Places; or that is within a designated or eligible New York City, New York State or National Register Historic District? (See the GIS System for Archaeology and National Register to confirm)	☒	☐
(b) Would the proposed project involve construction resulting in in-ground disturbance to an area not previously excavated?	☒	☐
(c) If "yes" to either of the above, list any identified architectural and/or archaeological resources and attach supporting information on whether the proposed project would potentially affect any architectural or archeological resources. See analysis		
7. *URBAN DESIGN AND VISUAL RESOURCES*: CEQR Technical Manual Chapter 10		
(a) Would the proposed project introduce a new building, a new building height, or result in any substantial physical alteration to the streetscape or public space in the vicinity of the proposed project that is not currently allowed by existing zoning?	☒	☐
(b) Would the proposed project result in obstruction of publicly accessible views to visual resources not currently allowed by existing zoning?	☐	☒
(c) If "yes" to either of the above, please provide the information requested in Chapter 10. See analysis		
8. *NATURAL RESOURCES*: CEQR Technical Manual Chapter 11		
(a) Does the proposed project site or a site adjacent to the project contain natural resources as defined in Section 100 of Chapter 11?	☐	☒
○ If "yes," list the resources and attach supporting information on whether the project would affect any of these resources.		
(b) Is any part of the directly affected area within the Jamaica Bay Watershed?	☐	☒
○ If "yes," complete the Jamaica Bay Watershed Protection Plan Project Tracking Form and submit according to its instructions.		
9. *HAZARDOUS MATERIALS*: CEQR Technical Manual Chapter 12		
(a) Would the proposed project allow commercial or residential uses in an area that is currently, or was historically, a manufacturing area that involved hazardous materials?	☒	☐
(b) Would the proposed project introduce new activities or processes using hazardous materials and increase the risk of human or environmental exposure?	☐	☒
(c) Does the proposed project site have existing institutional controls (*e.g.*, (E) designation or Restrictive Declaration) relating to hazardous materials that preclude the potential for significant adverse impacts?	☐	☒
(d) Would the project require soil disturbance in a manufacturing area or any development on or near a manufacturing area or existing/historic facilities listed in the Hazardous Materials Appendix (including nonconforming uses)?	☒	☐
(e) Would the project result in the development of a site where there is reason to suspect the presence of hazardous materials, contamination, illegal dumping or fill, or fill material of unknown origin?	☒	☐
(f) Would the project result in development on or near a site that has or had underground and/or aboveground storage tanks (*e.g.*, gas stations, oil storage facilities, heating oil storage)?	☒	☐
(g) Would the project result in renovation of interior existing space on a site with the potential for compromised air quality; vapor intrusion from either on-site or off-site sources; or the presence of asbestos, PCBs, mercury or lead-based paint?	☐	☒
(h) Would the project result in development on or near a site with potential hazardous materials issues such as government-listed voluntary cleanup/brownfield site, current or former power generation/transmission facilities, coal gasification or gas storage sites, railroad tracks or rights-of-way, or municipal incinerators?	☒	☐
(i) Has a Phase I Environmental Site Assessment been performed for the site?	☒	☐
○ If "yes," were Recognized Environmental Conditions (RECs) identified? Briefly identify: Based on the findings of the Phase 1 ESA, RECs, HRECs and VECs were identified related to the Subject Properties.	☒	☐
(j) Based on the Phase I Assessment, is a Phase II Investigation needed?	☒	☐
10. *WATER AND SEWER INFRASTRUCTURE*: CEQR Technical Manual Chapter 13		
(a) Would the project result in water demand of more than one million gallons per day?	☐	☒
(b) If the proposed project located in a combined sewer area, would it result in at least 1,000 residential units or 250,000 square feet or more of commercial space in Manhattan, or at least 400 residential units or 150,000 square feet or more of commercial space in the Bronx, Brooklyn, Staten Island, or Queens?	☐	☒
(c) If the proposed project located in a separately sewered area, would it result in the same or greater development than that listed in Table 13-1 in Chapter 13?	☐	☒
(d) Would the project involve development on a site that is 5 acres or larger where the amount of impervious surface would increase?	☐	☒
(e) If the project is located within the Jamaica Bay Watershed or in certain specific drainage areas, including Bronx River, Coney Island Creek, Flushing Bay and Creek, Gowanus Canal, Hutchinson River, Newtown Creek, or Westchester Creek, would it involve development on a site that is 1 acre or larger where the amount of impervious surface would increase?	☐	☒

	YES	NO
(f) Would the proposed project be located in an area that is partially sewered or currently unsewered?	☐	☒
(g) Is the project proposing an industrial facility or activity that would contribute industrial discharges to a Wastewater Treatment Plant and/or contribute contaminated stormwater to a separate storm sewer system?	☐	☒
(h) Would the project involve construction of a new stormwater outfall that requires federal and/or state permits?	☐	☒
(i) If "yes" to any of the above, conduct the appropriate preliminary analyses and attach supporting documentation.		
11. *SOLID WASTE AND SANITATION SERVICES*: CEQR Technical Manual Chapter 14		
(a) Using Table 14-1 in Chapter 14, the project's projected operational solid waste generation is estimated to be (pounds per week): 27,031 =(41 x 392 households) + (13 x 96 office employees) + (79 x 72 retail employees) + (13 x 163 trade school employees) + (79 x 16 art gallery employees) + (13 x 30 community facility employees) + (125 x 2 food distributor employees)		
○ Would the proposed project have the potential to generate 100,000 pounds (50 tons) or more of solid waste per week?	☐	☒
(b) Would the proposed project involve a reduction in capacity at a solid waste management facility used for refuse or recyclables generated within the City?	☐	☒
○ If "yes," would the proposed project comply with the City's Solid Waste Management Plan?	☐	☐
12. *ENERGY*: CEQR Technical Manual Chapter 15		
(a) Using energy modeling or Table 15-1 in Chapter 15, the project's projected energy use is estimated to be (annual BTUs): 89,755,178 = (126.7 x 354,508 residential gsf) + (216.3 x 126,239 commercial gsf) + (250.7 x 10,000 community facility gsf) + (554.3 x 27,109 industrial gsf)		
(b) Would the proposed project affect the transmission or generation of energy?	☐	☒
13. *TRANSPORTATION*: CEQR Technical Manual Chapter 16		
(a) Would the proposed project exceed any threshold identified in Table 16-1 in Chapter 16?	☒	☐
(b) If "yes," conduct the appropriate screening analyses, attach back up data as needed for each stage, and answer the following questions:		
○ Would the proposed project result in 50 or more Passenger Car Equivalents (PCEs) per project peak hour?	☒	☐
If "yes," would the proposed project result in 50 or more vehicle trips per project peak hour at any given intersection? ***It should be noted that the lead agency may require further analysis of intersections of concern even when a project generates fewer than 50 vehicles in the peak hour. See Subsection 313 of Chapter 16 for more information.*	☒	☐
○ Would the proposed project result in more than 200 subway/rail, bus trips, or 50 Citywide Ferry Service ferry trips per project peak hour?	☒	☐
If "yes," would the proposed project result, per project peak hour, in 50 or more bus trips on a single line (in one direction), 200 subway/rail trips per station or line, or 25 or more Citywide Ferry Service ferry trips on a single route (in one direction), or 50 or more passengers at a Citywide Ferry Service landing?	☐	☒
○ Would the proposed project result in more than 200 pedestrian trips per project peak hour?	☒	☐
If "yes," would the proposed project result in more than 200 pedestrian trips per project peak hour to any given pedestrian or transit element, crosswalk, subway stair, bus stop, or Citywide Ferry Service landing?	☒	☐
14. *AIR QUALITY*: CEQR Technical Manual Chapter 17		
(a) *Mobile Sources*: Would the proposed project result in the conditions outlined in Section 210 in Chapter 17?	☒	☐
(b) *Stationary Sources*: Would the proposed project result in the conditions outlined in Section 220 in Chapter 17?	☒	☐
○ If "yes," would the proposed project exceed the thresholds in Figure 17-3, Stationary Source Screen Graph in Chapter 17? (Attach graph as needed) See analysis	☒	☐
(c) Does the proposed project involve multiple buildings on the project site?	☒	☐
(d) Does the proposed project require federal approvals, support, licensing, or permits subject to conformity requirements?	☐	☒
(e) Does the proposed project site have existing institutional controls (*e.g.*, (E) designation or Restrictive Declaration) relating to air quality that preclude the potential for significant adverse impacts?	☐	☒
(f) If "yes" to any of the above, conduct the appropriate analyses and attach any supporting documentation. See analysis		
15. *GREENHOUSE GAS EMISSIONS*: CEQR Technical Manual Chapter 18		
(a) Is the proposed project a city capital project or a power generation plant?	☐	☒
(b) Would the proposed project fundamentally change the City's solid waste management system?	☐	☒
(c) Would the proposed project result in the development of 350,000 square feet or more?	☒	☐
(d) If "yes" to any of the above, would the project require a GHG emissions assessment based on guidance in Chapter 18?	☐	☐
○ If "yes," would the project result in inconsistencies with the City's GHG reduction goal? (See Local Law 22 of 2008; § 24-803 of the Administrative Code of the City of New York). Please attach supporting documentation.	☐	☐
16. *NOISE*: CEQR Technical Manual Chapter 19		

	YES	NO
(a) Would the proposed project generate or reroute vehicular traffic?	☒	☐
(b) Would the proposed project introduce new or additional receptors (see Section 114 in Chapter 19) near heavily trafficked roadways, within one horizontal mile of an existing or proposed flight path, or within 1,500 feet of an existing or proposed rail line with a direct line of site to that rail line?	☒	☐
(c) Would the proposed project cause a stationary noise source to operate within 1,500 feet of a receptor with a direct line of sight to that receptor or introduce receptors into an area with high ambient stationary noise?	☒	☐
(d) Does the proposed project site have existing institutional controls (*e.g.*, (E) designation or Restrictive Declaration) relating to noise that preclude the potential for significant adverse impacts?	☐	☒
(e) If "yes" to any of the above, conduct the appropriate analyses and attach any supporting documentation. See analysis		
17. *PUBLIC HEALTH*: CEQR Technical Manual Chapter 20		
(a) Based upon the analyses conducted, do any of the following technical areas require a detailed analysis: Air Quality; Hazardous Materials; Noise?	☒	☐
(b) If "yes," explain why an assessment of public health is or is not warranted based on the guidance in Chapter 20, "Public Health." Attach a preliminary analysis, if necessary. No significant unmitigated adverse impact is found in other CEQR analysis areas, such as air quality, water quality, hazardous materials, or noise, and therefore a public health analysis is not warranted		
18. *NEIGHBORHOOD CHARACTER*: CEQR Technical Manual Chapter 21		
(a) Based upon the analyses conducted, do any of the following technical areas require a detailed analysis: Land Use, Zoning, and Public Policy; Socioeconomic Conditions; Open Space; Historic and Cultural Resources; Urban Design and Visual Resources; Shadows; Transportation; Noise?	☒	☐
(b) If "yes," explain why an assessment of neighborhood character is or is not warranted based on the guidance in Chapter 21, "Neighborhood Character." Attach a preliminary analysis, if necessary. The proposed actions do not result in a significant impact in other technical areas nor a combination of moderate effects.		
19. *CONSTRUCTION*: CEQR Technical Manual Chapter 22		
(a) Would the project's construction activities involve:		
○ Construction activities lasting longer than two years?	☒	☐
○ Construction activities within a Central Business District or along an arterial highway or major thoroughfare?	☐	☒
○ Closing, narrowing, or otherwise impeding traffic, transit, or pedestrian elements (roadways, parking spaces, bicycle routes, sidewalks, crosswalks, corners, *etc.*)?	☒	☐
○ Construction of multiple buildings where there is a potential for on-site receptors on buildings completed before the final build-out?	☐	☒
○ The operation of several pieces of diesel equipment in a single location at peak construction?	☐	☒
○ Closure of a community facility or disruption in its services?	☐	☒
○ Activities within 400 feet of a historic or cultural resource?	☒	☐
○ Disturbance of a site containing or adjacent to a site containing natural resources?	☐	☒
○ Construction on multiple development sites in the same geographic area, such that there is the potential for several construction timelines to overlap or last for more than two years overall?	☒	☐
(b) If any boxes are checked "yes," explain why a preliminary construction assessment is or is not warranted based on the guidance in Chapter 22, "Construction." It should be noted that the nature and extent of any commitment to use the Best Available Technology for construction equipment or Best Management Practices for construction activities should be considered when making this determination. Due to the geographic location and scale of construction on two separate sites, an assessment of construction is warranted, and is provided in the attached EAS.		

20. *APPLICANT'S CERTIFICATION*

I swear or affirm under oath and subject to the penalties for perjury that the information provided in this Environmental Assessment Statement (EAS) is true and accurate to the best of my knowledge and belief, based upon my personal knowledge and familiarity with the information described herein and after examination of the pertinent books and records and/or after inquiry of persons who have personal knowledge of such information or who have examined pertinent books and records.

Still under oath, I further swear or affirm that I make this statement in my capacity as the applicant or representative of the entity that seeks the permits, approvals, funding, or other governmental action(s) described in this EAS.

APPLICANT/REPRESENTATIVE NAME	SIGNATURE	DATE
Kevin Williams	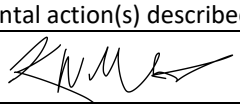	2/10/2022

PLEASE NOTE THAT APPLICANTS MAY BE REQUIRED TO SUBSTANTIATE RESPONSES IN THIS FORM AT THE DISCRETION OF THE LEAD AGENCY SO THAT IT MAY SUPPORT ITS DETERMINATION OF SIGNIFICANCE.

Part III: DETERMINATION OF SIGNIFICANCE (To Be Completed by Lead Agency)

INSTRUCTIONS: In completing Part III, the lead agency should consult 6 NYCRR 617.7 and 43 RCNY § 6-06 (Executive Order 91 or 1977, as amended), which contain the State and City criteria for determining significance.

1. For each of the impact categories listed below, consider whether the project may have a significant adverse effect on the environment, taking into account its (a) location; (b) probability of occurring; (c) duration; (d) irreversibility; (e) geographic scope; and (f) magnitude.

IMPACT CATEGORY	Potentially Significant Adverse Impact YES	NO
Land Use, Zoning, and Public Policy	☐	☒
Socioeconomic Conditions	☐	☒
Community Facilities and Services	☐	☒
Open Space	☐	☒
Shadows	☐	☒
Historic and Cultural Resources	☐	☒
Urban Design/Visual Resources	☐	☒
Natural Resources	☐	☒
Hazardous Materials	☐	☒
Water and Sewer Infrastructure	☐	☒
Solid Waste and Sanitation Services	☐	☒
Energy	☐	☒
Transportation	☐	☒
Air Quality	☐	☒
Greenhouse Gas Emissions	☐	☒
Noise	☐	☒
Public Health	☐	☒
Neighborhood Character	☐	☒
Construction	☐	☒

2. Are there any aspects of the project relevant to the determination of whether the project may have a significant impact on the environment, such as combined or cumulative impacts, that were not fully covered by other responses and supporting materials? ☐ YES ☒ NO

If there are such impacts, attach an explanation stating whether, as a result of them, the project may have a significant impact on the environment.

3. Check determination to be issued by the lead agency:

☐ **Positive Declaration**: If the lead agency has determined that the project may have a significant impact on the environment, and if a Conditional Negative Declaration is not appropriate, then the lead agency issues a *Positive Declaration* and prepares a draft Scope of Work for the Environmental Impact Statement (EIS).

☒ **Conditional Negative Declaration:** A *Conditional Negative Declaration* (CND) may be appropriate if there is a private applicant for an Unlisted action AND when conditions imposed by the lead agency will modify the proposed project so that no significant adverse environmental impacts would result. The CND is prepared as a separate document and is subject to the requirements of 6 NYCRR Part 617.

☐ **Negative Declaration:** If the lead agency has determined that the project would not result in potentially significant adverse environmental impacts, then the lead agency issues a *Negative Declaration*. The *Negative Declaration* may be prepared as a separate document (see template) or using the embedded Negative Declaration on the next page.

4. ***LEAD AGENCY'S CERTIFICATION***

TITLE	LEAD AGENCY
Director, Environmental Assessment and Review Division	City Planning Commission
NAME	DATE
Stephanie Shellooe	February 11, 2022

SIGNATURE

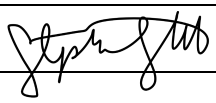

CITY PLANNING COMMISSION
CITY OF NEW YORK

OFFICE OF THE CHAIR

CONDITIONAL NEGATIVE DECLARATION

Project Identification
CEQR No. 21DCP118Q
ULURP Nos. 210234ZMQ, N210235ZRQ
SEQRA Classification: Unlisted

Lead Agency
City Planning Commission
120 Broadway, 31st Floor
New York, NY 10271
Contact: Stephanie Shellooe
(212) 720-3328

Name, Description and Location of Proposal

11th Street & 34th Avenue Rezoning
The Applicant, 33-33 11th St. LLC, is seeking the approval of a zoning map amendment and zoning text amendments (the "Proposed Actions") to facilitate the development of 33-33/33-51 11th Street (Block 318, Lots 15 and 22) and 33-80 12th Street (Block 318, Lot 1) with two mixed-use nine-story buildings, including a mixed-use commercial and residential building on Block 318 Lots 15 and 22 and a mixed-use commercial, community facility, industrial/manufacturing, and residential building on Block 318, Lot 1 located in the Astoria neighborhood of Queens Community District (CD) 1.

The zoning map amendment would rezone Block 318, Lots 1, 9, 11, 15, and 22 from an R5 zoning district to an M1-5/R6A zoning district. The proposed zoning text amendments include a text amendment to modify the New York City Zoning Resolution (ZR) Article 12, Chapter 3 to establish a new MX (M1-5/R6A mixed-use) district and to increase the maximum permitted building height to 95 feet and the maximum base height to 75 feet, and a text amendment to modify the Queens CD 1 map in Appendix F of the ZR to establish a new Mandatory Inclusionary Housing (MIH) Area that would be coterminous with the proposed rezoning area.

The Proposed Actions would facilitate the development of two separate buildings: Proposed Development Site 1 would be developed with an 8-story 95-foot-tall mixed-use commercial and residential building of 338,474 gross square feet (gsf), including 204,831 gsf of residential uses (up to 204 dwelling units, 61 of which would be permanently affordable pursuant to MIH); 90,251 gsf of commercial retail, studio and office uses, and 43,392 gsf of cellar-level parking. Proposed Development Site 2 would be an 8-story, 95-foot-tall, 248,095 gsf mixed-use commercial, community facility, industrial/manufacturing, and residential building, including 149,677 gsf of residential uses (up to148 dwelling units, 44 of which would be permanently affordable); 35,988 gsf of commercial retail uses, 10,000 gsf of community facility uses, 27,109 gsf of manufacturing warehouse uses, and 25,321 gsf of cellar-level parking.

The Proposed Actions would also affect two non-applicant owned lots, Block 318, Lots 9 and 11, which are assumed for the purpose of a conservative analysis to be merged for future development as Potential Development Site 1. Potential Development Site 1 would be redeveloped with a new 8-story, 95-foot-tall 45,741 gsf mixed-use commercial and residential building, containing 33,262 gsf of residential uses (up to 36 dwelling units, 7 of which would be permanently affordable); 7,490 gsf of ground floor commercial retail uses, and 4,989 gsf of parking uses.

Absent the proposed action, the affected area would remain unchanged. The proposed project is anticipated to be completed by 2024.

To avoid any potential significant adverse impacts, an (E) designation (E-661) for hazardous materials, air quality, and noise would be placed on the applicant's property, Queens Block 318, Lots 1, 15, and 22, and for hazardous materials and air quality on the non-applicant-owned lots, Block 318, Lots 9 and 11.

The (E) designation text related to hazardous materials is as follows:

Task 1-Sampling Protocol

The Applicant submits to OER, for review and approval, a Phase I of the site along with a soil, groundwater and soil vapor testing protocol, including a description of methods and a site map with all sampling locations clearly and precisely represented. If site sampling is necessary, no sampling should begin until written approval of a protocol is received from OER. The number and location of samples should be selected to adequately characterize the site, specific sources of suspected contamination (i.e., petroleum-based contamination and non-petroleum-based contamination), and the remainder of the site's condition. The characterization should be complete enough to determine what remediation strategy (if any) is necessary after review of sampling data. Guidelines and criteria for selecting sampling locations and collecting samples are provided by OER upon request.

Task 2-Remediation Determination and Protocol

A written report with findings and a summary of the data must be submitted to OER after completion of the testing phase and laboratory analysis for review and approval. After receiving such results, a determination is made by OER if the results indicate that remediation is necessary. If OER determines that no remediation is necessary, written notice shall be given by OER.

If remediation is indicated from test results, a proposed remediation plan must be submitted to OER for review and approval. The applicant must complete such remediation as determined necessary by OER. The Applicant should then provide proper documentation that the work has been satisfactorily completed.

A construction-related health and safety plan should be submitted to OER and would

be implemented during excavation and construction activities to protect workers and the community from potentially significant adverse impacts associated with contaminated soil, groundwater and/or soil vapor. This plan would be submitted to OER prior to implementation.

With the implementation of the above (E) designation, no significant adverse impacts related to hazardous materials would occur.

The (E) designation text related to air quality is as follows:

Block 318, Lots 15 and 22 – Projected Development Site 1

Any new development on the above-referenced property must exclusively use natural gas as the type of fuel for the heating, ventilation, air conditioning and hot water system (HVAC) and ensure that the HVAC stack(s) is located at the highest tier and at least 98 feet above grade to avoid any potential significant adverse air quality impacts.

Block 318, Lot 1 – Projected Development Site 2

Any new development on the above-referenced property must exclusively use natural gas as the type of fuel for the heating, ventilation, air conditioning and hot water system (HVAC) and ensure that the HVAC stack(s) is located at the highest tier and at least 98 feet above grade to avoid any potential significant adverse air quality impacts.

Block 318, Lots 9 and 11 – Potential Development Site 1

Any new development on the above-referenced property must exclusively use natural gas as the type of fuel for the heating, ventilation, air conditioning and hot water system (HVAC) and ensure that the HVAC stack(s) is located at the highest tier and at least 98 feet above grade to avoid any potential significant adverse air quality impacts.

The (E) designation text related to noise is as follows:

Projected Development Site 1 (Block 318 / Lots 15, 22):

In order to ensure an acceptable interior noise environment, future trade school/commercial office/artist's studio uses must provide a closed-window condition with a minimum of 28 dBA window/wall attenuation on the facades facing 33rd Road and the facades facing 11th Street within 50 feet of 33rd Road and the facades facing 12th Street within 50 feet of 33rd Road and 31 dBA of attenuation on the facades facing 11th Street beyond 50 feet of 33rd Road and the facades facing 12th Street beyond 50 feet of 33rd Road and the facades facing 34th Avenue within 50 feet of 11th Street and 12th Street to maintain an interior noise level not greater than 45 dBA for trade school uses or not greater than 50 dBA for commercial office and artist's studio uses as illustrated in the EAS. To maintain a closed-window condition, an alternate means of

ventilation must also be provided. Alternate means of ventilation includes, but is not limited to, air conditioning.

Projected Development Site 2 (Block 318 / Lot 1):

In order to ensure an acceptable interior noise environment, future commercial office uses and community facility uses without dwelling units must provide a closed-window condition with a minimum of 31 dBA window/wall attenuation on the façades facing 34th Avenue and the facades facing 12th Street and the facades facing 33rd Road within 50 feet of 11th Street and 12th Street and the facades facing 11th Street within 50 feet of 11th Street and the facades facing Block 318, Lot 11 within 50 feet of 11th Street to maintain an interior noise level not greater than 45 dBA for community facility uses without dwelling units or not greater than 50 dBA for commercial office uses as illustrated in the EAS. To maintain a closed-window condition, an alternate means of ventilation must also be provided. Alternate means of ventilation includes, but is not limited to, air conditioning.

Statement of No Significant Effect:

The Environmental Assessment and Review Division of the Department of City Planning, on behalf of the City Planning Commission, has completed its technical review of the Environmental Assessment Statement, dated February 11, 2022, prepared in connection with the ULURP Application (Nos. 210234ZMQ, N210235ZRQ). The City Planning Commission has determined that the proposed action will have no significant effect on the quality of the environment, once it is modified as follows:

The Applicant agrees to enter into a Restrictive Declaration (RD) to ensure the implementation of mitigation measures and Project Components Related to the Environment (PCREs) relating to transportation and construction which would avoid the potential for any significant adverse impacts. The mitigation measures and PCREs are as follows:

1. The applicant shall implement as part of its construction of the Proposed Building, and at its sole cost and expense, the following PCREs:
    a. The applicant will develop and submit a plan for review and approval by New York City Department of Transportation (NYCDOT) to install traffic calming measures on the northbound and southbound directions along 11th Street in the vicinity of 33rd Road (the "approved traffic calming measures"). Upon NYC DOT approval of all plans and specifications prepared by the applicant, the applicant shall install the approved traffic calming measures to the satisfaction of DOT prior to obtaining temporary or permanent Certificates of Occupancy for the proposed development.
    b. The applicant has committed to implementing the Best Available Technology for construction equipment to reduce construction-related effects of the project to the greatest extent feasible including a Construction Noise Mitigation Plan, diesel reduction measures, clean fuel, best available tailpipe reduction technologies, dust

control measures, installation of noise barriers, preparation of a pedestrian circulation plan and restrictions on vehicle idling.

2. The applicant shall implement, at its sole cost and expense, the following Mitigation Measures:
    a. The applicant shall develop and submit a plan for review and approval by NYC DOT to install an all-way stop sign control at the intersection of 12th Street at 34th Avenue. Upon NYC DOT approval of all plans and specifications prepared by the applicant, the applicant shall install the approved all-way stop sign control to the satisfaction of DOT prior to obtaining temporary or permanent Certificates of Occupancy for the proposed development.

Supporting Statement:

The above determination is based on an environmental assessment which finds that:

1. The applicant will enter into a Restrictive Declaration to ensure the implementation of project components and mitigation relating to transportation and construction which would avoid the potential for any significant adverse impacts related thereto.

2. The traffic analysis indicates that project-generated traffic has the potential to generate significant adverse impacts at the following intersections, which are adjacent to the project site:

    - 11th Street & 33rd Road
    - 12th Street & 34th Avenue

    The proposed PCRE and mitigation measures, including the installation of traffic calming measures and an all-way stop, would fully mitigate the potential impacts at these intersections. Pursuant to correspondence from the Department of Transportation dated February 8, 2022, the proposed mitigation measures were deemed to be reasonable and appropriate. DOT has also agreed to investigate the feasibility of implementing the mitigation measures once the project is built. Consequently, no significant adverse impacts related to traffic would occur.

3. The Construction analysis concludes that the proposed project would not result in significant adverse impacts during construction. The applicant has committed to implementing the Best Available Technology for construction equipment to reduce construction-related effects of the project to the greatest extent feasible including a Construction Noise Mitigation Plan, diesel reduction measures, clean fuel, best available tailpipe reduction technologies, dust control measures, installation of noise barriers, preparation of a pedestrian circulation plan, and restrictions on vehicle idling.

4. The (E) designation for hazardous materials, air quality and noise would ensure that the proposed action would not result in significant adverse impacts due to hazardous materials, air quality and noise.

5. No other significant adverse effects on the environment which would require an Environmental Impact Statement are foreseeable.

It is fully agreed and understood that if the foregoing conditions, modification, and alterations are not fully incorporated into the proposed action, this Conditional Negative Declaration shall become null and void. In such event, the applicant shall be required to prepare a Draft Environmental Impact Statement before proceeding further with said proposal.

This Conditional Negative Declaration has been prepared in accordance with Article 8 of the Environmental Conservation Law 6NYCRR part 617.

I, the Undersigned, as the applicant or authorized representative for this proposal, hereby affix my signature in acceptance of the above conditions to the proposed action.

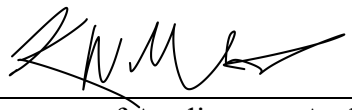

Signature of Applicant or Authorized Representative

Date: February 11, 2022

Kevin Williams

Name of Applicant or Authorized Representative

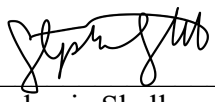

Stephanie Shellooe, Director
Environmental Assessment and Review Division
Department of City Planning

Date: February 11, 2022

Dan Garodnick, Chair
City Planning Commission

Date:

Figure 1: Project Location Map

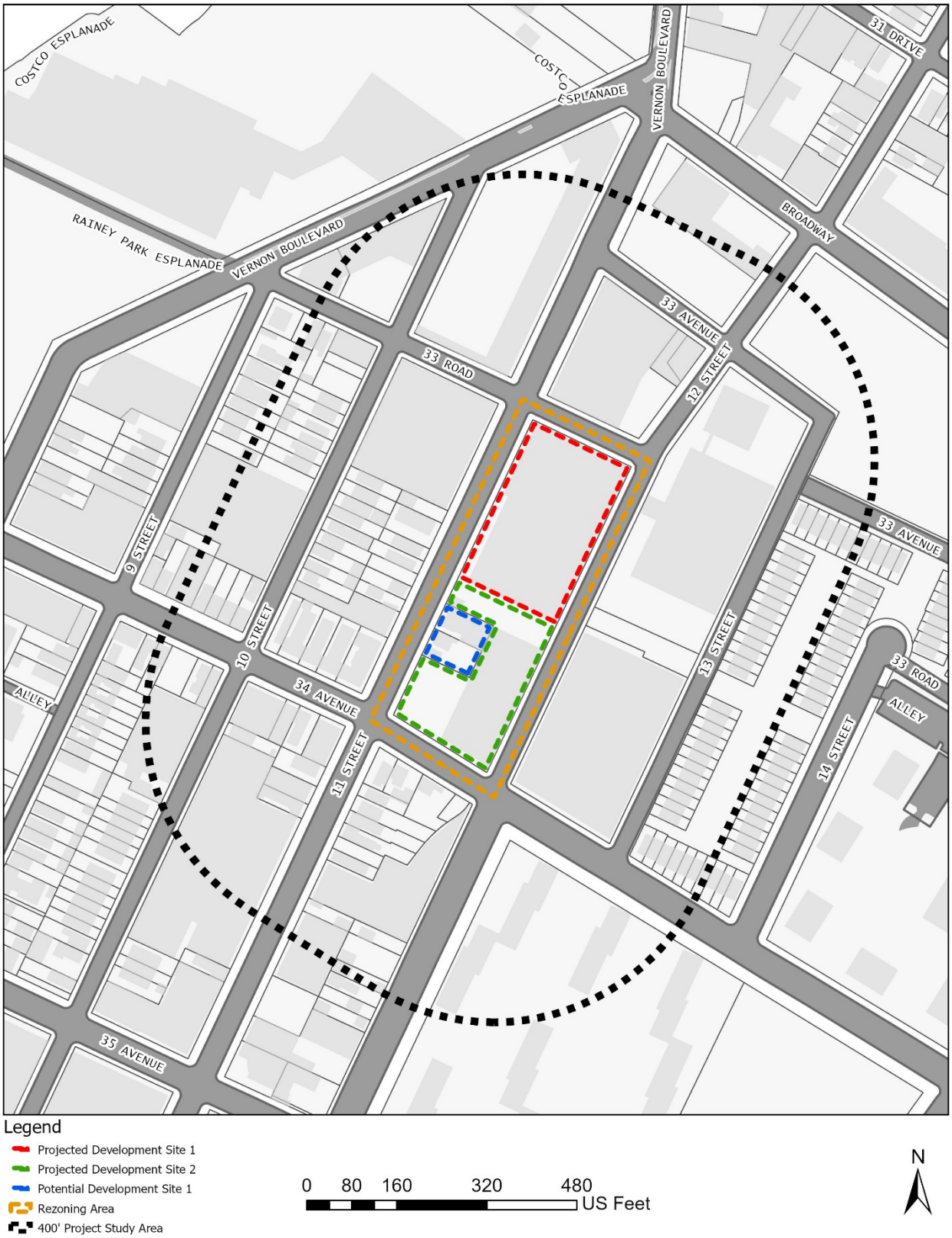

Figure 2: Land Use Map

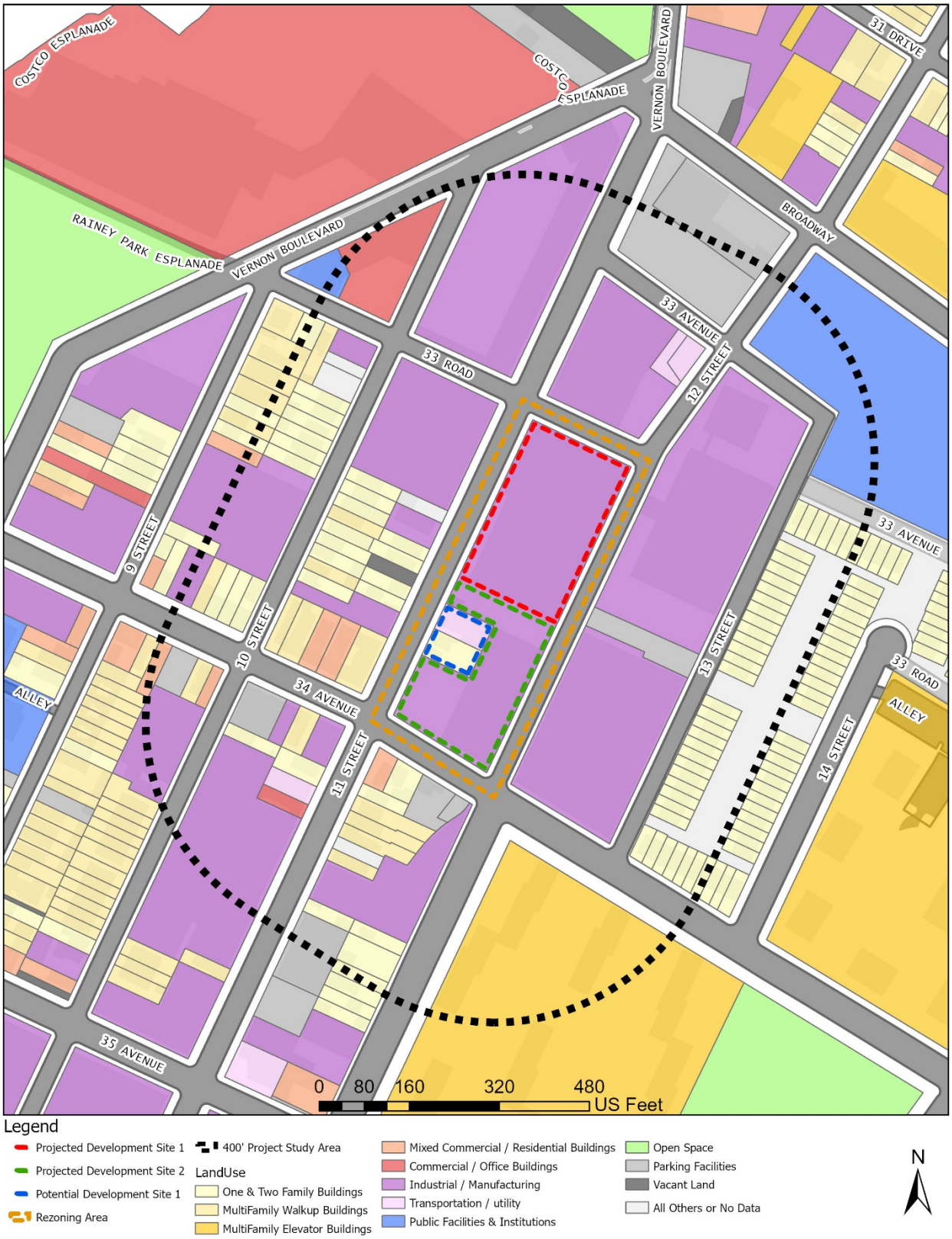

Figure 3: Tax Map



Figure 4: Zoning Change Map

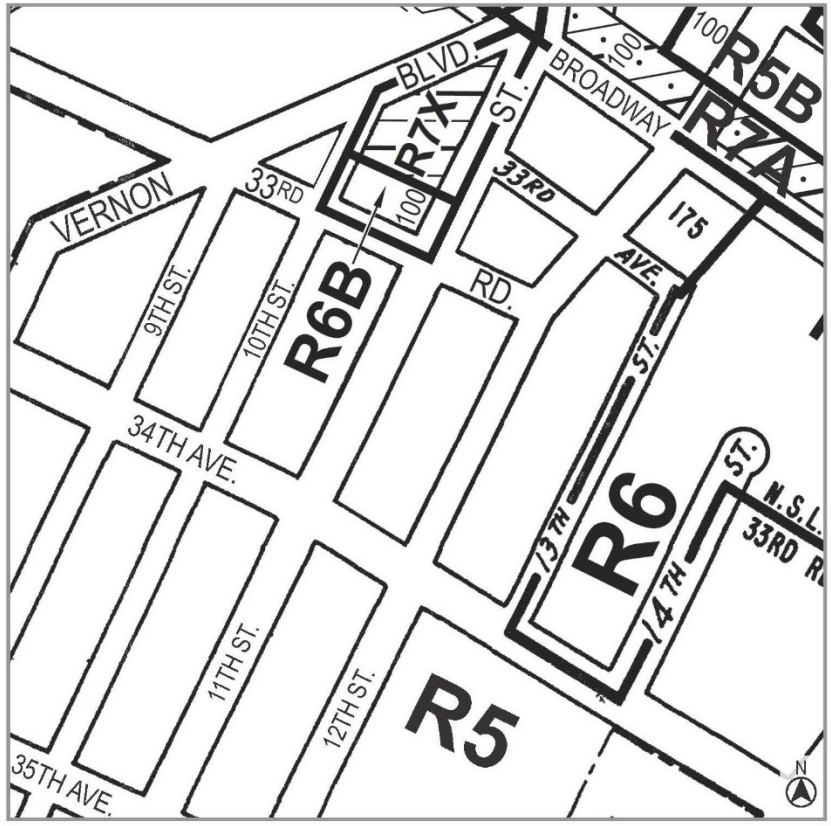

Current Zoning Map (9a)

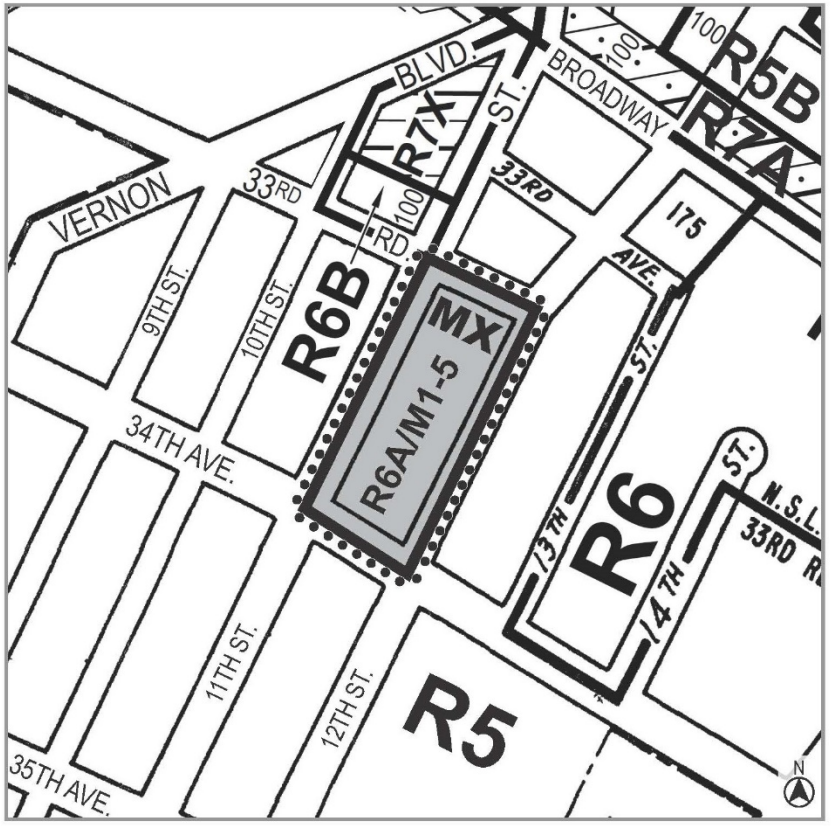

Proposed Zoning Map (9a) - Area being rezoned is outlined with dotted lines

Rezoning from R5 to R6A/M1-5 (MX)

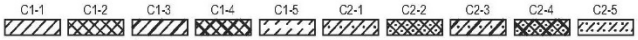

NOTE: Where no dimensions for zoning district boundaries appear on the zoning maps, such dimensions are determined in Article VII, Chapter 8 (Location of District Boundaries) of the Zoning Resolution.

Figure 5: Zoning Map

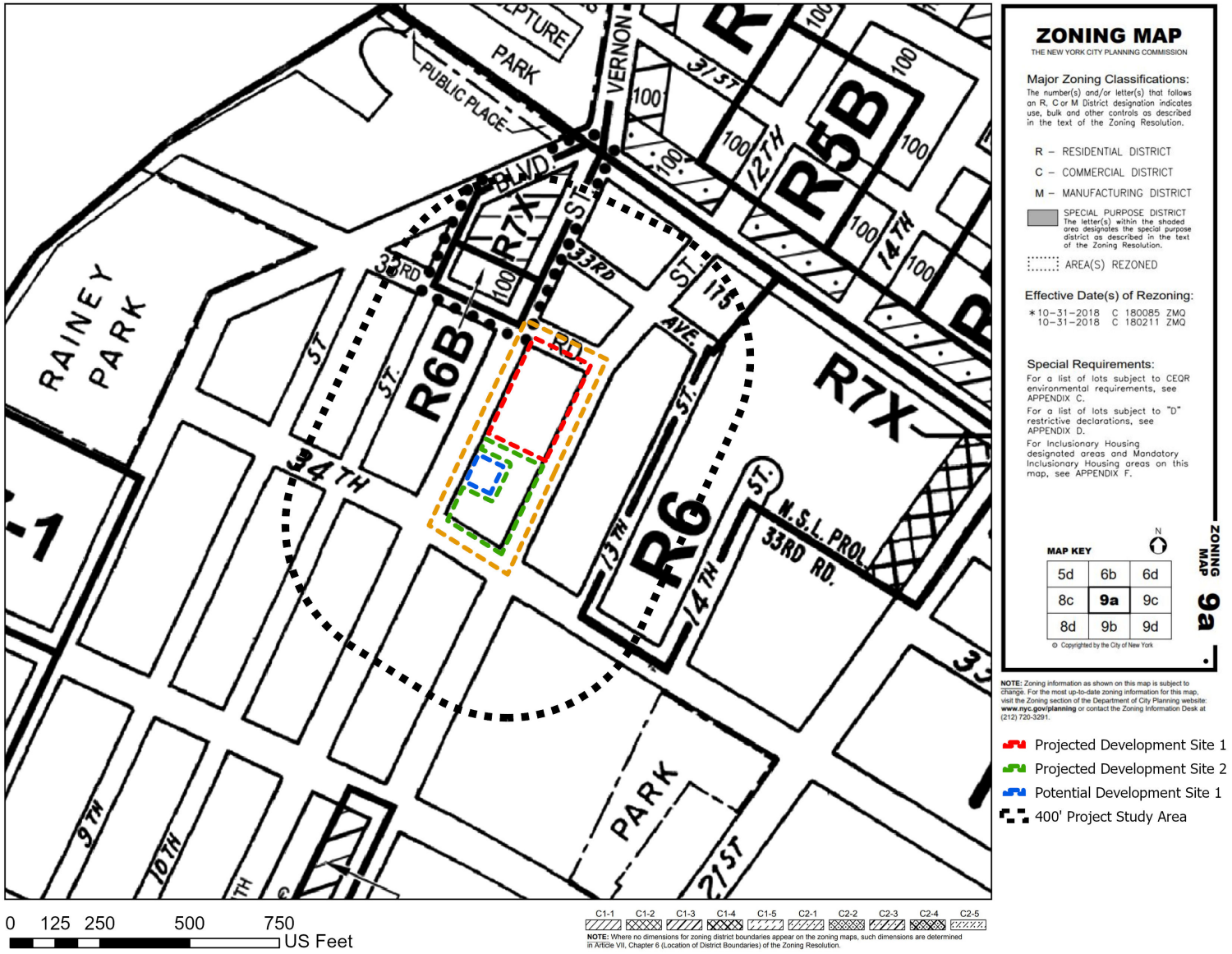

Figure 6: Photo Key



1. View of 34th Avenue facing northwest from 12th Street (Development Site 2 at right).



2. View of Development Site 2 facing north from the intersection of 34th Avenue and 12th Street.



3. View of 12th Street facing northeast from 34th Avenue (Development Site 2 at left).

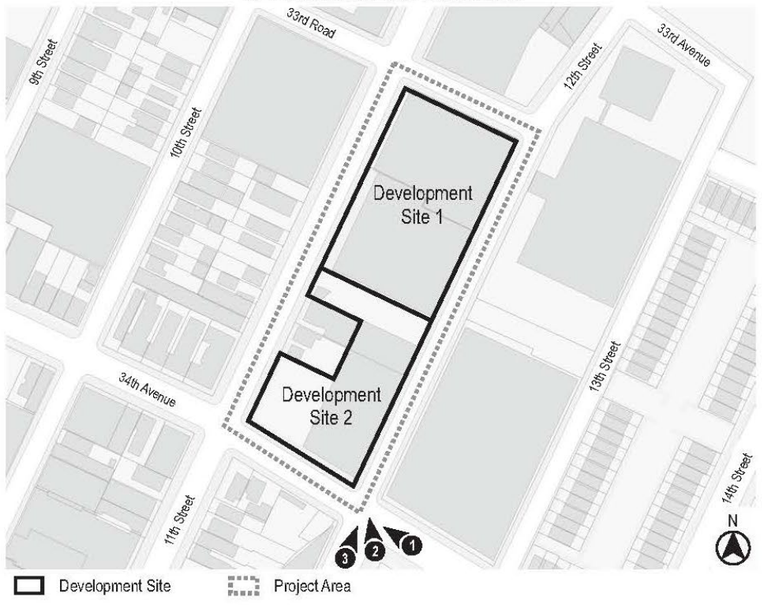

Urban Cartographics
Photographs Taken on March 11, 2020

11th Street and 34th Avenue Rezoning, Queens

Figure 6-1: Photo Key



4. View of Development Site 2 facing north from 12th Street.



5. View of the sidewalk along the west side of 12th Street facing northeast from 34th Avenue (Development Site 2 at left).



6. View of the intersection of 34th Avenue and 12th Street facing south from Development Site 2.

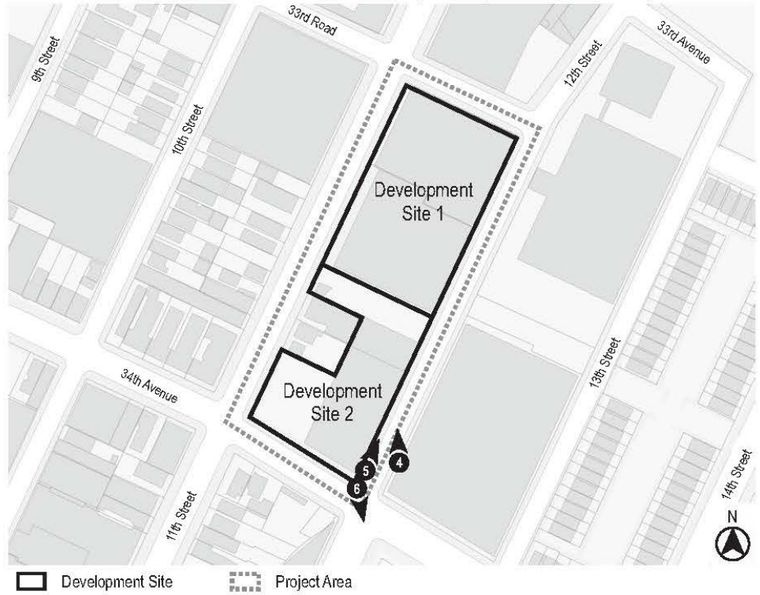

Urban Cartographics
Photographs Taken on March 11, 2020

11th Street and 34th Avenue Rezoning, Queens

Figure 6-3: Photo Key



7. View of the sidewalk along the north side of 34th Avenue facing northwest from 12th Street (Development Site 2 at right).



8. View of the south side of 34th Avenue facing southwest from Development Site 2.



9. View of Development Site 2 facing northeast from 34th Avenue.

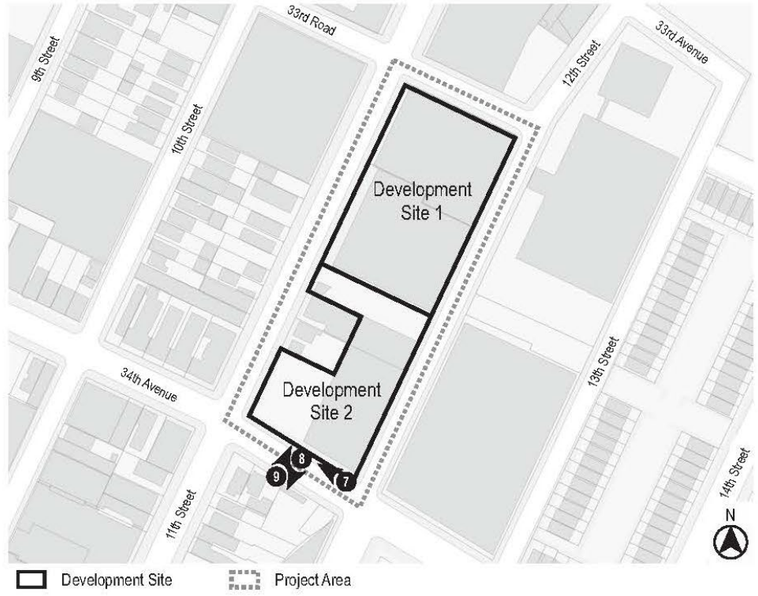

Urban Cartographics
Photographs Taken on March 11, 2020

Figure 6-4: Photo Key



10. View of the sidewalk along the north side of 34th Avenue facing southeast from 11th Street (Development Site 2 at left).



11. View of the intersection of 34th Avenue and 11th Street facing west from Development Site 2.



12. View of the sidewalk along the east side of 11th Street facing northeast from 34th Avenue (Development Site 2 at right).

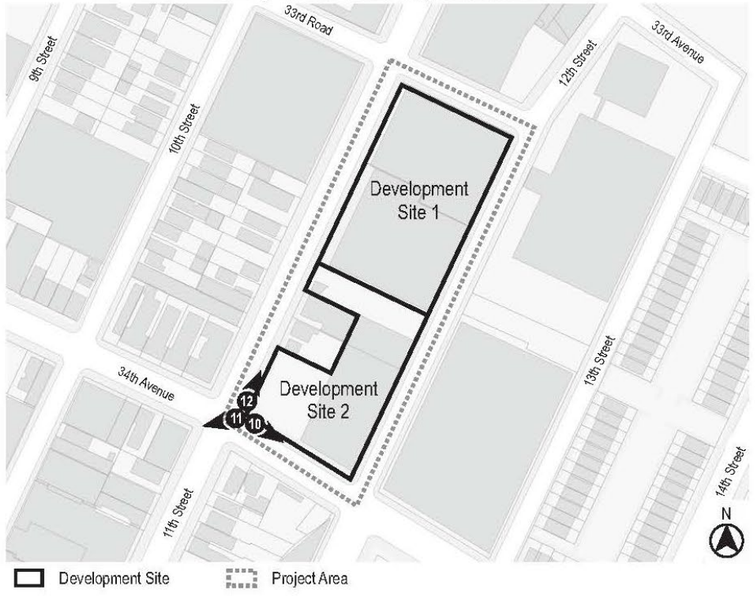

Urban Cartographics
Photographs Taken on March 11, 2020

Figure 6-5: Photo Key



13. View of 11th Street facing northeast from 34th Avenue (Development Site 2 at right).



14. View of Development Site 2 facing east from the intersection of 34th Avenue and 11th Street.



15. View of 34th Avenue facing southeast from 11th Street (Development Site 2 at left).

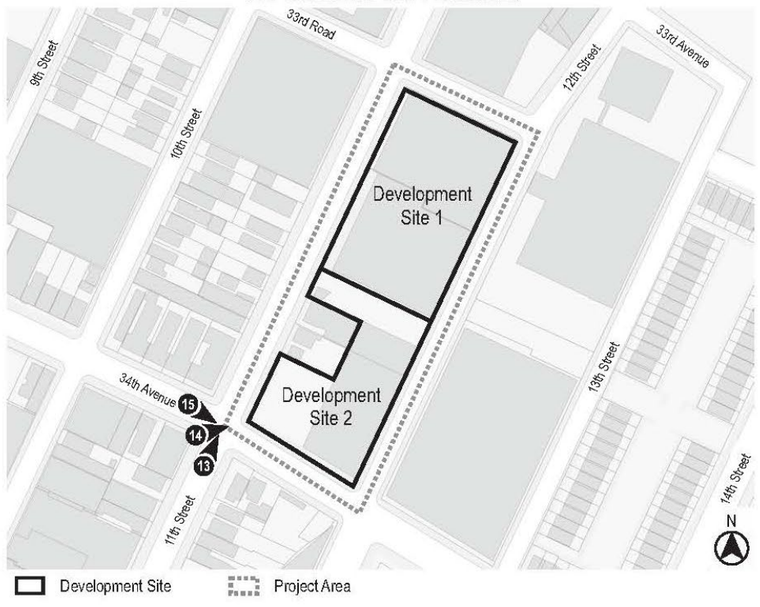

Urban Cartographics
Photographs Taken on March 11, 2020

Figure 6-6: Photo Key



16. View of Development Site 2 facing east from 11th Street.



17. View of the west side of 11th Street facing northwest from the Project Area.



18. View of the Project Area facing southeast from 11th Street.

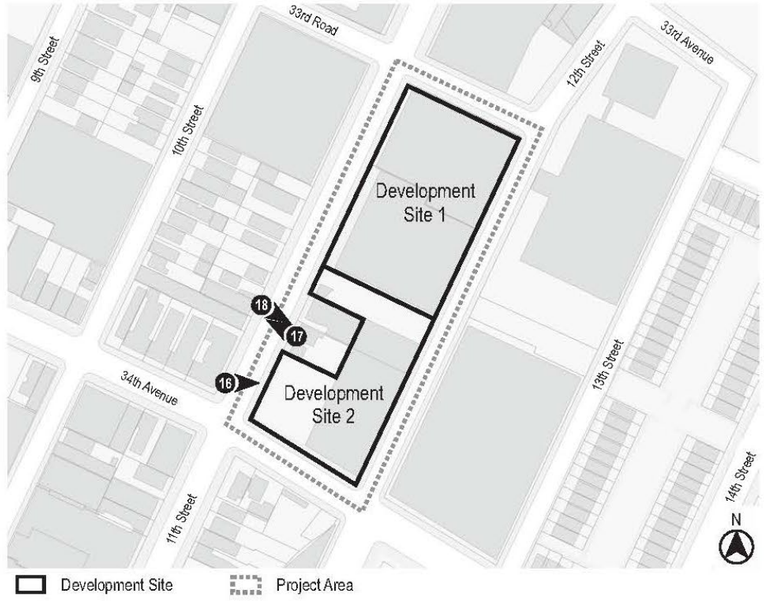

Urban Cartographics
Photographs Taken on March 11, 2020

Figure 6-7: Photo Key



19. View of the sidewalk along the east side of 11th Street facing southwest (Development Site 2 at left).



20. View of the west side of 11th Street facing west from Development Site 2.



21. View of the west side of 11th Street facing northwest from Development Site 1.

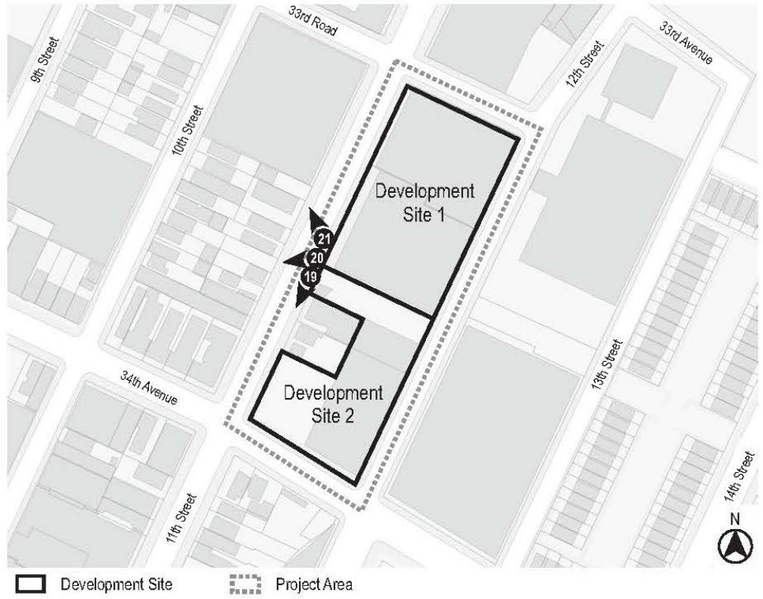

Urban Cartographics
Photographs Taken on March 11, 2020

Figure 6-8: Photo Key



22. View of the sidewalk along the east side of 11th Street facing northeast (Development Site 1 at right).



23. View of 11th Street facing southwest (Development Site 2 at left).



24. View of 11th Street facing northeast (Development Site 1 at right).

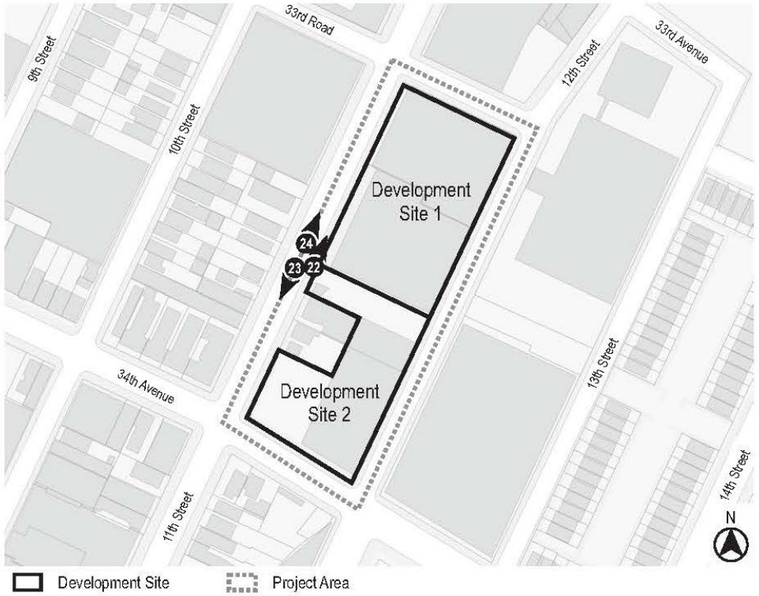

Urban Cartographics
Photographs Taken on March 11, 2020

Figure 6-9: Photo Key



25. View of the Project Area facing south from 11th Street.



26. View of Development Site 1 facing northeast from 11th Street.



27. View of the west side of 11th Street facing northwest from Development Site 1.

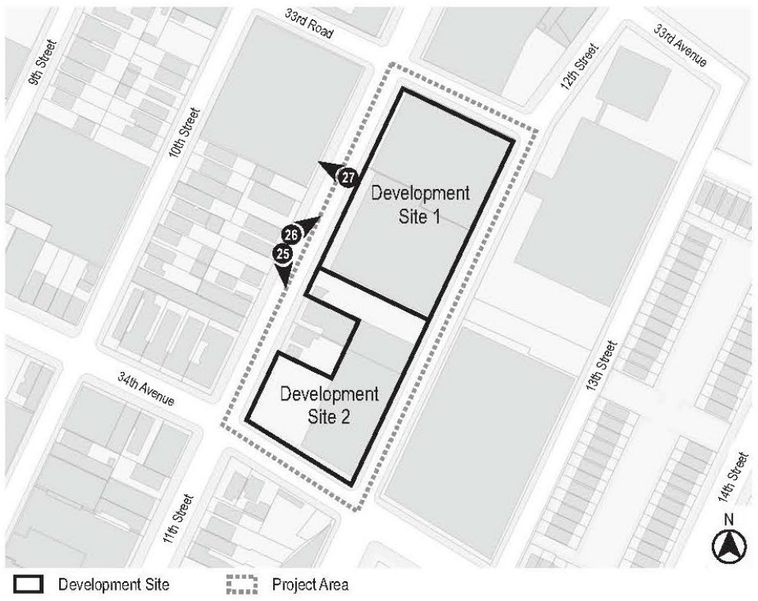

Urban Cartographics
Photographs Taken on March 11, 2020

Figure 6-10: Photo Key

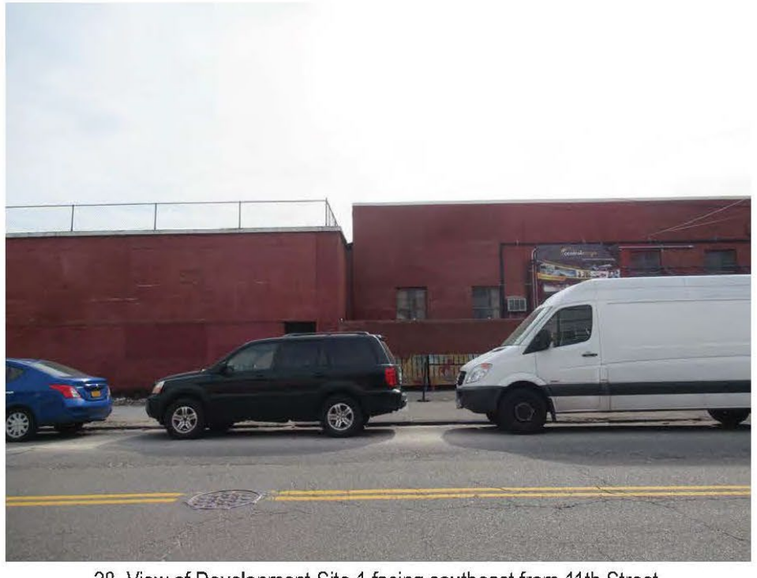

28. View of Development Site 1 facing southeast from 11th Street.



29. View of Development Site 1 facing south from 11th Street.



30. View of the sidewalk along the east side of 11th Street facing southwest from 33rd Road (Development Site 1 at left).

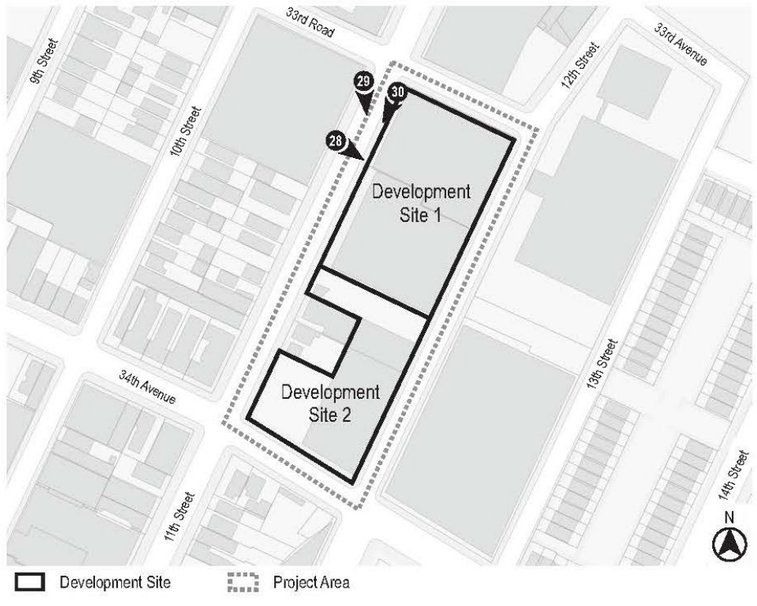

Urban Cartographics
Photographs Taken on March 11, 2020

Figure 6-11: Photo Key



31. View of the sidewalk along the south side of 33rd Road facing southeast from 11th Street (Development Site 1 at right).



32. View of the intersection of 33rd Road and 11th Street facing north from Development Site 1.



33. View of 11th Street facing southwest from 33rd Road (Development Site 1 at left).

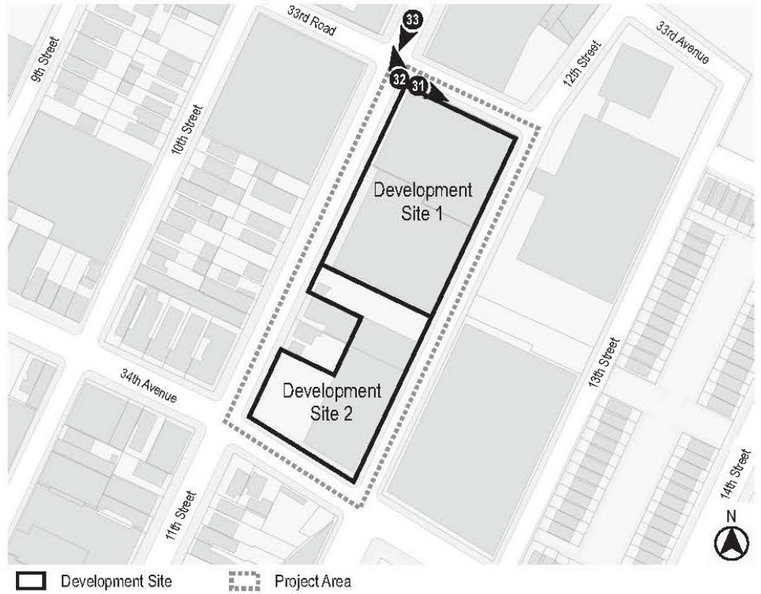

Urban Cartographics
Photographs Taken on March 11, 2020

Figure 6-12: Photo Key



34. View of Development Site 1 facing south from the intersection of 33rd Road and 11th Street.



35. View of 33rd Road facing southeast from 11th Street (Development Site 1 at right).



36. View of Development Site 1 facing southwest from 33rd Road.

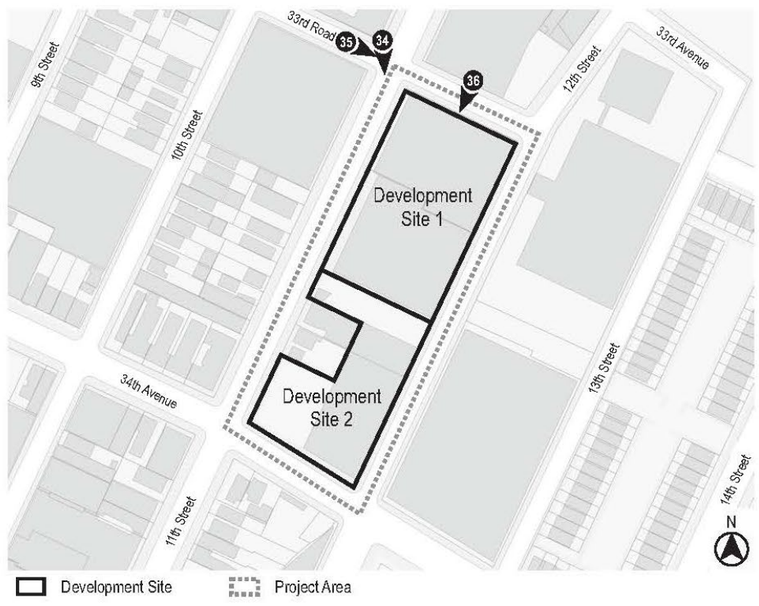

Urban Cartographics
Photographs Taken on March 11, 2020

Figure 6-13 Photo Key



37. View of the north side of 33rd Road facing northeast from Development Site 1.



38. View of Development Site 1 facing southwest from the intersection of 33rd Road and 12th Street.



39. View of 33rd Road facing northwest from 12th Street (Development Site 1 at left).

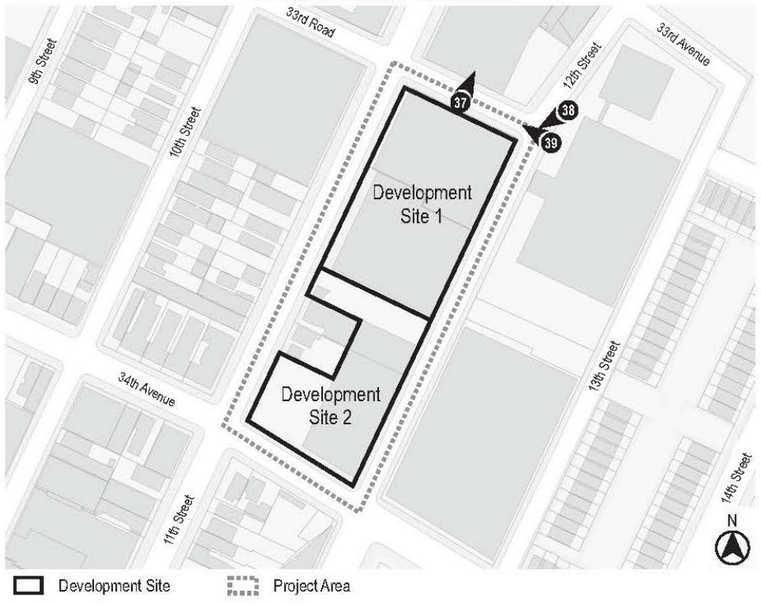

Urban Cartographics
Photographs Taken on March 11, 2020

Figure 6-14: Photo Key



40. View of 12th Street facing southwest from 33rd Road (Development Site 1 at right).



41. View of Development Site 1 facing southwest from 12th Street.



42. View of the sidewalk along the south side of 33rd Road facing northwest from 12th Street (Development Site 1 at left).

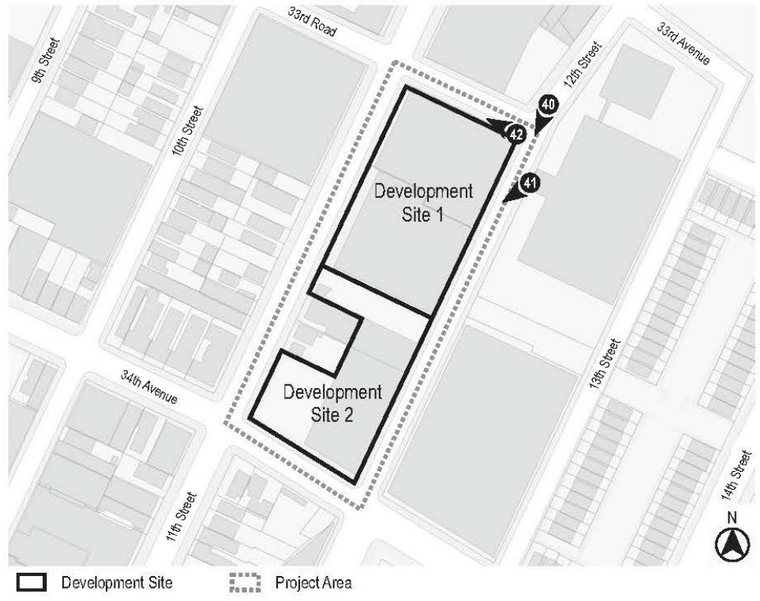

Urban Cartographics
Photographs Taken on March 11, 2020

Figure 6-15: Photo Key



43. View of the sidewalk along the west side of 12th Street facing southwest from 33rd Road (Development Site 1 at right).



44. View of the east side of 12th Street facing northeast from Development Site 1.

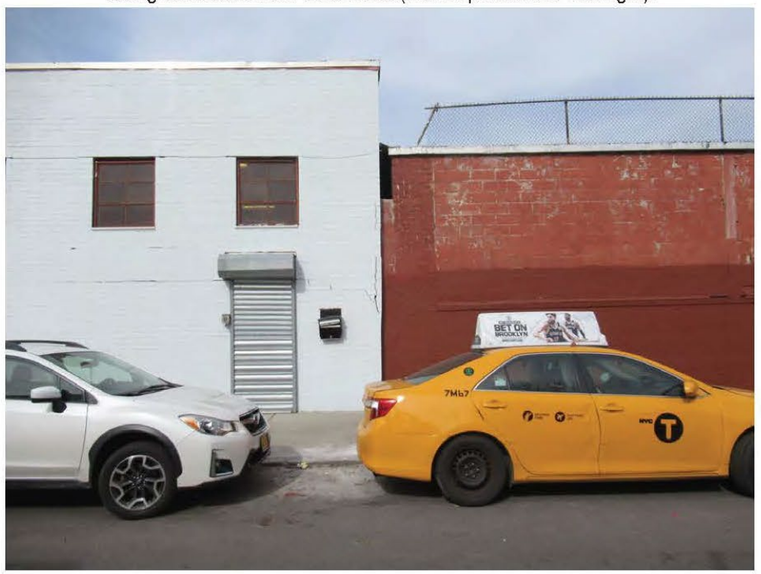

45. View of Development Site 1 facing northwest from 12th Street.

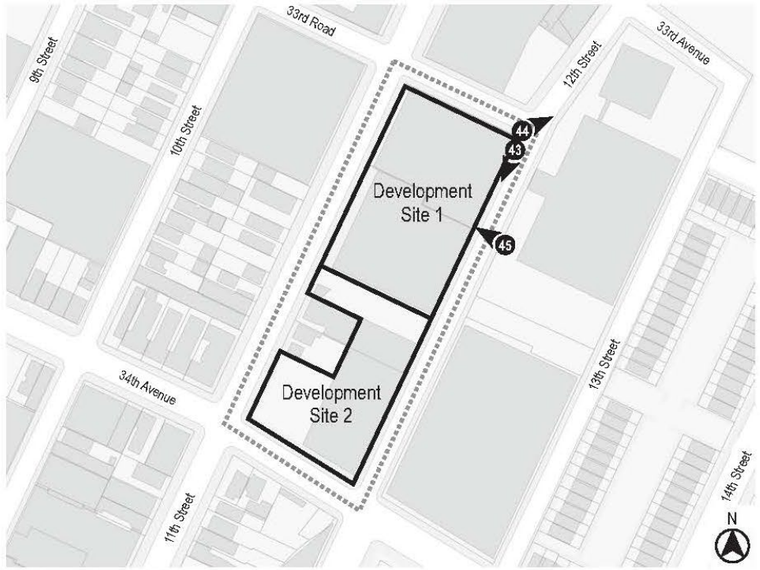

Urban Cartographics
Photographs Taken on March 11, 2020

Figure 6-16: Photo Key



46. View of the east side of 12th Street facing southeast from Development Site 1.



47. View of 12th Street facing southwest (Development Site 2 at right).



48. View of Development Site 1 facing north from 12th Street.

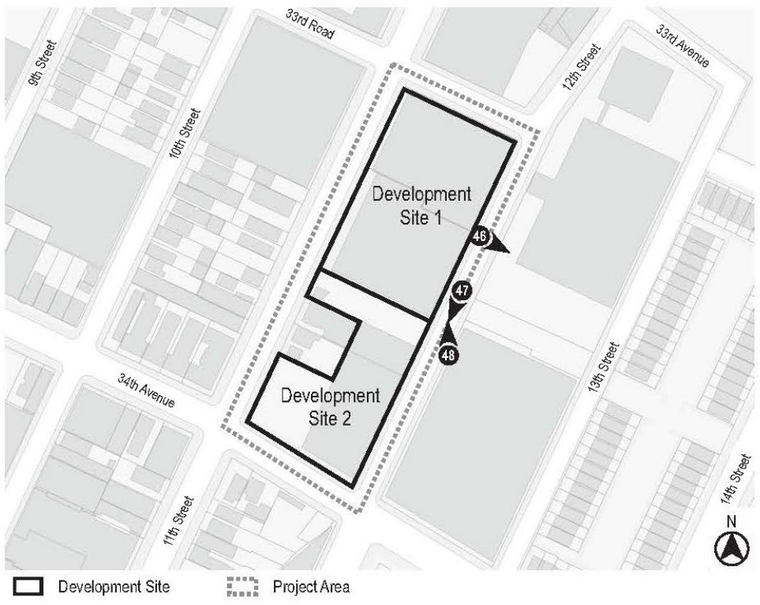

Urban Cartographics
Photographs Taken on March 11, 2020

1. Project Description

1.1 Introduction

The Applicant, JPP 33rd Street LLC and Lily and John Realty Inc., is seeking the approval of a zoning map amendment and two zoning text amendments (Proposed Actions) comprising Block 318, Lots 1, 9,11,15, and 22 (the Affected Area) bounded by 33rd Road to the north, 12th Street to the east, 34th Avenue to the south, and 11th Street to the west in the Astoria neighborhood of Queens, Community District 1. In total, the rezoning area would be approximately 107,400 square feet (sf).

The zoning map amendment would rezone Block 318, Lots 1, 9, 11, 15, and 22 from a R5 zoning district to an M1-5/R6A (MX) zoning district. The zoning text amendments include modifying Zoning Resolution Article 12, Chapter 3 to establish a MX district and to increase maximum permitted height to 95 feet and maximum base height to 75 feet, and modifying Appendix F, Queens CD 1 map to establish an area coterminous with the rezoning area as a Mandatory Inclusionary Housing (MIH) Area—for maximum flexibility, MIH Options 1 and 2 would be mapped over the area. The Proposed Actions would facilitate the development of Block 318, Lots 15 and 22 (Proposed Development Site 1) and Block 318, Lot 1 (Proposed Development Site 2).

Proposed Development Site 1 would be improved with an 8-story 95-foot-tall mixed commercial and residential building of 338,474 GSF (284,331 ZSF; 4.98 FAR), including 204,831 GSF of residential, 90,251 GSF of commercial, and 43,392 GSF of cellar level parking. The building would contain 204 dwelling units (approximately 1,000 GSF average size), approximately 61 of which would be permanently set aside per MIH Option 2. Proposed commercial uses would include 11,955 GSF of local retail stores (UG 6), 6,552 GSF for an artist's studio (UG 9), and 71,744 GSF for two trade schools and accessory offices (UG 9). 100 parking spaces would be required for the residential uses, and 100 spaces would be provided in the 43,392 GSF enclosed garage at cellar level.

Proposed Development Site 2 would be an 8-story, 95-foot-tall mixed-use commercial, community facility, industrial/manufacturing, and residential building. The building would contain 248,095 GSF (207,201 ZSF; 4.99 FAR), including 149,677 GSF of residential (148 dwelling units, approximately 44 of which would be permanently set aside per MIH Option 2), 35,988 GSF of commercial, 10,000 GSF of community facility, 27,109 GSF of manufacturing, and 25,321 GSF of cellar level parking. The ground floor would contain 12,086 GSF of local retail store uses (UG 6) and 27,109 GSF of food distribution warehouse uses (UG 16; no manufacturing on site), the second floor would contain 10,000 GSF of community facility (UG 4) and 23,902 GSF of general office uses, and floors three through nine would contain 149,677 GSF of residential uses. 60 residential accessory parking spaces would be required, and 60 would be provided at cellar level accessible from a curb cut on 11th Street.

The Proposed Actions are discretionary actions subject to environmental review. The New York City (NYC) Department of City Planning (DCP) is the lead agency on behalf of the NYC City Planning Commission (CPC) for environmental review under City Environmental Quality Review (CEQR).

1.2 Background

The Affected Area was originally zoned R5 in 1961 and has not changed since. The building on Lot 22 was constructed around 1930, and the buildings on Lot 1 were constructed around 1958—both lots are legal non-conforming industrial uses within the R5 zoning district. The building on Lot 15 was constructed in 1972, after the area was mapped with an R5 zoning district, and was granted a use waiver approval by the Board of Standards and Appeals as a UG 17 use complying with the performance standards for an M-1 zoning district.

The West Astoria Rezoning (C 870580 ZMQ), effective September 14, 1989, rezoned all or portions of 43 blocks in West Astoria community of northwest Queens, generally bounded by Astoria Park South to the north, Broadway to the south, 21st Street to the east, and Vernon Boulevard to the west. The area was rezoned from R5 and R6 zoning districts to R3-1, R4, R5, R6A, R6B, R7A, R7B, and R7X with some extensions of C2-2 commercial overlays on Broadway, 21st Street and Astoria Boulevard. The rezoning was intended to reflect existing conditions in West Astoria, to prevent the construction of developments not consistent with the scale and character of the neighborhood, and to encourage new development in appropriate areas.

The Astoria Rezoning (C 100199 ZMQ), effective May 25, 2010, impacted all or portions of 238 blocks bounded by 20th Avenue to the north, Broadway to the south, Steinway Street to the east, and East River and Vernon Boulevard to the west. The rezoning sought to replace the prevalent R5 and R6 zoning districts with contextual lower density districts such as R5B, R5D, R6A, and R6B districts to establish height limits and reinforce the existing residential neighborhood's development, preserving the existing scale and character of the area while allowing for a modest increase in residential and commercial density in limited locations.

In addition to the two large-scale rezoning, three small-scale rezoning happened in the vicinity of the Affected Area in the past decades. The Vernon Boulevard-Broadway Rezoning (C 100421 ZMQ; N 190151 ZRQ), affecting the entirety of Block 315, was approved in October 2019 to rezone an existing R5 zoning district to R6B, R7X/C1-3 zoning district to construct three mixed-use buildings with housing and commercial uses along with introducing MIH to the block. The 11-14 35th Avenue Ravenswood Rezoning (C 180211 ZMQ), was approved in October 2018 proposing a zoning map amendment to rezone the eastern portion of 12th Street between 35th and 36th Avenues in the Ravenswood section of Astoria Queens CD1 from an R5 zoning district to an R6A/C1-3 zoning district in order to facilitate the development of a new 8-story mixed use building with 74 dwelling units including 22 affordable units under the MIH program. The Hour Children Rezoning (C 100145 ZMQ), effective on September 16, 2010, rezoned an area bounded by 36th Avenue, a line midway between 12th Street and 13th Street, 37th Avenue and 11th Street from M1-1 to R5D/C1-3 to facilitate a 4-story supportive housing development. The Vernon Boulevard Rezoning (C 020087 ZMQ), affecting portions of Block 322 and 327 on the west side of Vernon Boulevard, became effective in July 2006 to rezone three waterfront lots from R5 to R7-1 to facilitate residential development, and a portion of one waterfront lot from R5 to M1-1 to reflect the existing land use.

1.3 Description of the Surrounding Area

Land use in the 400-foot surrounding area is a mix of residential, commercial, light industrial, and community facility uses, and also includes several vacant lots. The predominant land uses in the area are light industrial and residential.

Residential uses are characterized by 2- to 4-story brick buildings, used as one- and two-family dwelling buildings and multi-family walk-up buildings, which typically are located midblock along 9th, 10th, and 11th Streets. Bordered by 12th and 24th Streets, and 34th and 36th Avenues, a large New York City Housing Authority's (NYCHA's) development called Ravenswood Houses at the southeast corner of the surrounding area takes up nearly four blocks (Blocks 332, 335, 523, and 559, Lot 2). Opened in 1951, the complex consists of 31 six- and seven-story elevator buildings totaling 2,163 apartments, with an estimated 4,150 low-income residents. Across 34th Avenue to the north of the Ravenswood Houses between 14th Street and 21st Street, another large-scale residential development located just outside of the surrounding area boundary is North Queensview Homes (Block 528, Lot 50), a five-acre cooperative community with seven 14-story elevator buildings, totaling 364 dwelling units. Farther east of the North Queensview Homes across 21st Street, the entirety of Block 557 bounded by 21st Street, 33rd Road, 34th Avenue, and Crescent Street is owned by Queensview Inc. Founded in 1950, it is a residential cooperative housing complex with 14 separate 15-story elevator buildings and 726 apartments, along with over 10 acres of park land, mature trees, and walking paths. Additionally, there is a townhouse development two blocks to the east between 13th and 14th street. The development, known as the Estates at Hallett's Cove, were developed in conjunction with the New York City Housing Partnership in the 1990's and consists of 107 three-story two-family attached residences; it is located in the adjacent R6 zoning district.

Industrial uses within the surrounding area are typically located on larger lots at block ends with a range of uses, including a DHL warehouse, bakery wholesalers and warehouses, maintenance and construction wholesalers, media studios, artist studios, steel fabricators, and stone businesses. Other industrial uses of note in the area include the 63,850 GSF warehouse at 12-01 34th Avenue, the 34,692 GSF warehouse at 33-01 11th Street, and the 34,225 GSF warehouse operating as a marble supplier at 33-53 10th Street.

There are multiple community facility uses in the surrounding area. The Noguchi Museum, serving as a gallery dedicated to the architect Isamu Noguchi, is located within the surrounding area at 33rd Road bounded by 10th Street and Vernon Boulevard, which includes a museum building and a sculpture garden. The Phoenix House, a drug rehabilitation center, is located southwest of the Project Area on Vernon Boulevard just south of 34th Avenue on Block 323. Long Island City High School is located to the northeast of the Project Area along Broadway between 12th Street and 21st Street. Other notable uses in the surrounding area include Socrates Sculpture Park with a lot area of 77,345 square feet in the adjacent R6B/R7X/C1-3 zoning district, Costco with a lot area of 356,000 square feet in the adjacent R5 zoning district, and Rainey Park with a lot area of 403,608 square feet to the northwest along the East River.

Built form within the 400-foot surrounding area varies by use, and consists of large one- to three-story warehouses and industrial buildings, surface parking lots, one- to three-story residential buildings, and the six-story NYCHA buildings to the southeast.

The traffic grid to the north of the Project Site is irregular at the confluence of Vernon Boulevard and Broadway. The surrounding area includes or is adjacent to major thoroughfares including 34th Avenue as minor arterial, 11th Street as major collector, and 21st Street as principal arterial. The area is well-served by public transit, and is within a Transit Zone. The Broadway and 36th Street subway stations are serviced by the MTA with stops for the N and W lines and is within one mile to the southeast of the Affected Area. The 21st Street-Queensbridge subway station is also within one mile to the south of the Affected Area with MTA F line. Stops for the Q103, Q104, Q69, and Q100 buses are in the immediate area. The area is also served by Citibike.

1.4 Description of the Affected Area

The Affected Area, the entirety of Block 318, is located in Community District 1 in the Northwest Ravenswood neighborhood of Queens, bordering on the neighborhood of Queensbridge-Ravenswood-Long Island City. The Affected Area is bounded by 33rd Road to the north, 12th Street to the east, 34th Avenue to the south, and 11th Street to the west. 33rd Road is a northwest-southeast road with one moving lane of traffic in each direction and curbside parking. It dead-ends at 12th Street at the northeast portion of the project block. 12th Street is a southwest to northeast one-way road with a single moving lane of traffic and curbside parking. 34th Avenue is a southeast-northwest road with one moving lane of traffic in each direction and curbside parking. 11th Street is a southwest-northeast road with one moving lane of traffic in each direction and curbside parking. 33rd Road and 12th Street are considered narrow roads, at approximately 50 feet in width each while 34th Avenue and 11th Street are considered wide roads, at approximately 80 feet in width each.

As shown above in **Figures 1 through 6**, the Affected Area is within a R5 zoning district. R5 zoning districts allow residential development up to 1.25 FAR and community facility development up to 2.00 FAR. Commercial and manufacturing uses are not permitted in R5 zoning districts.

The Proposed Development Sites are Block 318, Lots 15 and 22 (Proposed Development Site 1) and Block 318, Lot 1 (Proposed Development Site 2) and are both under Applicant control.

- Lot 15 is a 29,470 SF lot with frontage on 11th and 12th Streets and is improved with a 1-story 27,950 GSF industrial building constructed in 1972. The building is currently occupied by Lady Linda Cake Company, a bakery warehouse (UG 16 food distribution) and Central Construction Management, a construction management company (general office space).

- Lot 22 is a 27,668 SF lot at the northern portion of the block with frontage on 11th Street, 12th Street, and 33rd Road, and is improved with a 1-story 27,225 GSF industrial building constructed around 1930. The building is currently occupied by Automated Bread Distributing, a wholesale bakery (UG 16 food distribution), and Control Cargo USA, a logistics company (general office space).

- Lot 1 is located at the southern end of the block and is an irregularly shaped lot with frontage along 11th Street, 12th Street, and 34th Avenue. It is improved with 39,500 GSF of industrial floor area across 3 separate buildings: the tallest building is 3 stories and runs along the eastern portion of the block, which contains Curb Mobility LLC, a software company (general office space), and Metroshop Inc.,

an autobody shop (UG 16 auto repair); a 1-story industrial building is located on the interior portion of the lot along 34th Avenue and is occupied by Verifone Media (general office space); the third building is a 1-story accessory building to a public parking lot with a curb cut along 11th Street. A surface lot is also located on the southwest portion of the block, and is a private parking lot for employees and work vehicles associated with the buildings on Lot 1.

Other lots within the Affected Area include Lots 9 and 11, both of which are independently owned. Both lots have frontage along 11th Street and are located next to each other on the western portion of the block.

- Lot 9 is a 4,292 SF lot improved with a 2-story, 2-family home (.37 FAR) constructed around 1920 and an accessory metal shed.

- Lot 11 is a 4,263 SF lot that is improved with a 1-story, 4,250 GSF building (1.00 FAR) constructed around 1910. The building is currently occupied by The Custom Shop Inc., an autobody shop (UG 16 auto repair).

1.5 Description of the Proposed Development

The Applicant proposes to develop two new 8-story, 95-foot-tall mixed-use buildings on Proposed Development Site 1 (Block 318, Lots 15 and 22) and Proposed Development Site 2 (Block 318, Lot 1).

Proposed Development Site 1 would be improved with an 8-story 95-foot-tall mixed commercial and residential building of 338,474 GSF (284,331 ZSF; 4.98 FAR), including 204,831 GSF (194,873 ZSF; 3.40 FAR) of residential use, 90,251 GSF (89,459 ZSF; 1.56 FAR) of commercial use, and 43,392 GSF of cellar level parking. The building would contain 204 dwelling units (approximately 1,000 GSF average size), at least 61 of which would be permanently set aside per MIH Option 2. Proposed commercial uses would include 11,955 GSF of local retail stores (UG 6), 6,552 GSF for an artist's studio (UG 9), and 71,744 GSF for two trade schools and accessory offices (UG 9). 100 parking spaces would be required for the residential uses, and 100 spaces would be provided in the 43,392 GSF enclosed garage at cellar level accessible by a curb cut on 12th Street. The proposed building has a height of 95 feet after a 15-foot setback above the base height of 75 feet. The development would wrap the block, maintaining a continuous street wall on each frontage.

Proposed Development Site 2 would be improved with a 8-story, 95-foot-tall mixed-use commercial, community facility, industrial/manufacturing, and residential building with 148 dwelling units (approximately 1,000 GSF average size), at least 44 of which would be permanently set aside per MIH options 1 or 2. The building would contain 248,095 GSF (207,201 ZSF; 4.99 FAR), including 149,677 GSF (138,318 ZSF; 3.33 FAR) of residential use, 35,988 GSF (34,519 ZSF; 0.83 FAR) of commercial use, 10,000 GSF (100,000 ZSF; 0.24 FAR) of community facility use, 27,109 GSF (24,364 ZSF; 0.59 FAR) of manufacturing use, and 25,321 GSF of cellar level parking. The ground floor would contain 12,086 GSF of local retail store uses (UG 6) and 27,109 GSF of food distribution warehouse uses (UG 16; no manufacturing on site), the second floor would contain 10,000 GSF of community facility (UG 4) and 23,902 GSF of general office uses, and floors three

through nine would contain 149,677 GSF of residential uses. 60 residential accessory parking spaces would be required, and 60 would be provided at cellar level accessible from a curb cut on 11th Street.

1.6 Action(s) Necessary to Facilitate the Project

There are three actions necessary to facilitate the Proposed Developments:

1. A Zoning Map Amendment to rezone Block 318, Lots 1, 9, 11, 15, and 22 from a R5 zoning district to an M1-5/R6A zoning district.
2. A Zoning Text Amendment to ZR Article 12, Chapter 3 to establish MX district and to increase maximum permitted height to 95 feet and maximum base height to 75 feet.
3. A Zoning Text Amendment to ZR Appendix F: Inclusionary Housing Designated Areas and Mandatory Inclusionary Housing Areas for Community District 1, Queens, to establish the Affected Area as an MIH Area, Options 1 and 2.

1.7 Purpose and Need

The proposed M1-5/R6A (MX) zoning district allows for new medium-density mixed-use development with a maximum total FAR of 5.0. The proposed M1-5/R6A (MX) district would permit residential uses (Use Groups 1 and 2), community facility uses (Use Groups 3 and 4), commercial uses (Use Groups 5 to 15), semi-industrial uses (Use Group 16), and certain light industrial uses (Use Group 17). The maximum residential FAR is 3.6 in MIH Areas, the maximum community facility FAR is 3.0, the maximum commercial FAR is 5.0, and the maximum manufacturing FAR is also 5.0. In the proposed M1-5/R6A (MX) zoning district the maximum base height would be 75 feet and the maximum building height would be 95 feet for buildings with a qualifying ground floor in MIH Areas. New residences are required to provide off-street parking for 50 percent of the dwelling units, with an exemption for income-restricted units within the Transit Zone.

The proposed rezoning would allow the creation of affordable housing units, which would be permitted as-of-right within the proposed zoning district mapped as an MIH area. New affordable housing is a critical need in Queens Community District 1, where approximately 37.4 percent of the households are rent burdened. According to the U.S. Census Bureau, American Community Survey (ACS) 2015-19 Five Year Estimates for Public Use Microdata Area (PUMA) 4101 (which approximates Queens Community District 1), 37.4 percent of households spend 35 percent or more of their income on rent. The number of rent burdened households has dropped slightly by 1.2 percent from ACS 2006-2010 data to ACS 2015-19 data, indicating that housing affordability remains to be one of the major concerns in the community district for approximately one decade. Meanwhile, the median gross rent in Queens Community District 1 has risen by 19.9 percent from 1,353 dollars per month to 1,622 dollars per month between the two American Community Surveys. It is higher than the median gross rent in Queens of 1,520 dollars per month and New York City of 1,396 dollars per month. Besides, 14.7 percent of Queens Community District 1 residents have incomes below the NYC.gov Poverty Threshold, above the estimated 13.0 percent in Queens and below the 18.9 percent Citywide. According to the Furman Center's "State of New York City's Housing and Neighborhoods in 2018", median monthly rent in Community District 1 has risen from $1,120 in the year 2000 to $1,670 in 2017 as the demand for housing

has placed upward pressure on the supply of housing. It reports median asking rents were substantially higher at $2,200 in 2018, rising from $1,700 in 2010.[1]

In contrast to the existing R5 zoning district, which allows a maximum residential FAR of 1.25, the proposed M1-5/R6A (MX) zoning district allows a higher maximum FAR of up to 5.0. The proposed rezoning to M1-5/R6A (MX) removes the maximum lot coverage restrictions in the R5 district. This allows the proposed developments to utilize a greater portion of the development sites, resulting in a more efficient development. The proposed M1-5/R6A (MX) zoning district also allows commercial, semi-industrial, and light industrial uses in contrast to the existing R5 where those uses are not permitted. No parking is required for non-residential uses in the proposed M1-5/R6A (MX) zoning district.

The proposed zoning text amendment to establish a new M1-5/R6A (MX) district is necessary to map the district within the Affected Area. The proposed text amendment would also establish a higher maximum base height of 75 feet and higher maximum building height of 95 feet. The proposed change results in increases of 10 feet for the maximum base and building heights comparable to the permitted maximum base and building heights for R7A zoning districts. The proposed increase in height would allow the second floor in a mixed-use building to have a higher floor to ceiling height to accommodate high quality non-residential space. Otherwise, this second-floor space would be constrained by lower floor to ceiling heights, which would be less attractive to the variety of non-residential tenants that would be permitted in the proposed M1-5/R6A (MX) zoning district. Overall, the proposed zoning map and text amendments are consistent with existing land uses within the surrounding area and would promote new mixed-use development on a suitable, underutilized property.

1.8 Analysis Framework

Build Year

The analysis year for the Proposed Actions is 2024 based on an 18-month period for environmental review and ULURP processes, including overlapping construction for the two proposed buildings on Block 318, Lots 15 and 22 and Block 318, Lot 1.

The analysis which follows compares the difference between the future without the Proposed Actions (No-Action condition) and the future with the Proposed Actions (With-Action condition) for the 2024 analysis year. This EAS studies the potential for individual and cumulative environmental impacts related to the Proposed Actions.

No-Action Condition

Existing conditions are expected to remain in the future No-Action Condition. The manufacturing lots (Block 318, Lots 1, 15, and 22) and the transportation utility lot (Block 318, Lot 11) between 11th Street and 12th

1 See New York University Furman Center, State of New York City's Housing and Neighborhoods in 2018, 52; available at: https://furmancenter.org/files/sotc/2018_SOC_Full_2018-07-31.pdf

Street would continue to be legal, non-conforming uses within the existing R5 zoning district, and the zoning district's limited bulk (1.25 FAR residential; 2.00 FAR community facility) and restrictions on permitted uses (no commercial or industrial uses allowed) make redevelopment unlikely.

With-Action Condition

Projected Development Site 1 (Block 318, Lots 15 and 22)

A new 8-story, 95-foot-tall 338,474 GSF (284,331 ZSF; 4.98 FAR) mixed-use commercial and residential building would be developed on Projected Development Site 1. On floors 1 and 2, there would be 90,251 GSF (89,459 ZSF; 1.56 FAR) of commercial floor area. Proposed commercial uses would include 11,955 GSF of local retail stores (UG 6), 6,552 GSF for an artist's studio (UG 9), and 71,744 GSF for two trade schools and accessory offices (UG 9). The building would contain 204,831 GSF (194,873 ZSF; 3.40 FAR) of residential space on floors 3 through 9, totaling up to 229 dwelling units (approximately 850 ZSF average size), including 46 reserved as permanently affordable. 100 parking spaces would be required for the residential use, and all spaces would be provided at the cellar level per the Applicant's proposed plans in a 43,392 GSF enclosed garage accessible by a curb cut on 12th Street. The proposed building has a height of 95 feet after a 15-foot setback above the base height of 75 feet. The development would wrap the block, maintaining a continuous street wall on each frontage.

Projected Development Site 2 (Block 318, Lot 1)

Projected Development Site 2 would be an 8-story, 95-foot-tall mixed-use commercial, community facility, industrial/manufacturing, and residential building with 163 dwelling units (approximately 850 ZSF average size), at least 33 of which would be permanently affordable. The building would contain 248,095 GSF (207,201 ZSF; 4.99 FAR), including 149,677 GSF (138,318 ZSF; 3.33 FAR) of residential use, 35,988 GSF (34,519 ZSF; 0.83 FAR) of commercial use, 10,000 GSF (100,000 ZSF; 0.24 FAR) of community facility use, 27,109 GSF (24,364 ZSF; 0.59 FAR) of manufacturing use, and 25,321 GSF of cellar level parking. The ground floor would contain 12,086 GSF of local retail store uses (UG 6) and 27,109 GSF of food distribution warehouse uses (UG 16; no manufacturing on site), the second floor would contain 10,000 GSF of community facility (UG 4) and 23,902 GSF of general office uses, and floors three through nine would contain 149,677 GSF of residential uses. 60 residential accessory parking spaces would be required, and would be provided at the cellar level accessed from a curb cut on 11th Street.

Potential Development Site 1 (Block 318, Lots 9 and 11)

The independently owned lots would assemble and have a projected lot size of approximately 8,555 SF, and would be developed with a new 8-story, 95-foot-tall 45,741 GSF (38,070 ZSF; 4.45 FAR) mixed-use commercial and residential building. The building would contain 33,262 GSF of residential floor area (36 total dwelling units, 7 of which would be reserved as permanently affordable) and 7,490 GSF of ground floor commercial (local retail). 17 residential accessory parking spaces would be required and would be provided at cellar level in a 4,989 GSF enclosed parking garage.

For purposes of a conservative analysis the RWCDS will assess the maximum permitted envelope for the urban design and shadows assessment. The shadows assessment will also consider a reasonable bulkhead height for mechanical equipment (25-foot-tall bulkheads for both projected sites and the potential site).

Density-related aspects of environmental review (e.g., land use, zoning and public policy; open space; transportation; construction) will be based on the increment between the no-action and with-action condition on Projected Development Sites 1 and 2, and would include an additional 392 dwelling units (78 affordable), 126,239 GSF of commercial space, 10,000 GSF of community facility space, and a decrease of 67,566 GSF of industrial space. A more detailed breakdown of the increment is shown in **Table 1.8-1** and **Table 1.8-2**. Site specific aspects of environmental review (e.g., shadows, urban design) will consider Projected Development Sites 1 and 2, as well as Potential Development Site 1.

The RWCDS Analysis Framework described above is shown below in **Table 1.8-1 and Table 1.8-2.**

Table 1.8-1: Existing/No-Action and With-Action Conditions

Site Info				Existing/No-Action Condition		With-Action Condition					
Site ID	Block	Lot	Lot Area (gsf)	Zoning	Mf (gsf)	Zoning	Res. (gsf)	DU	CF (gsf)	Com. (gsf)	Mf (gsf)
Projected Site 1	318	15	57,138	R5	27,950	M1-5/R6A (MX)	204,831	229	0	90,251	0
		22			27,225						
Projected Site 2		1	41,527		39,500		149,677	163	10,000	35,988	27,109
Total			**98,665**		**94,675**		**354,508**	**392**	**10,000**	**126,239**	**27,109**

DU = Dwelling Units

gsf = gross square feet

Res. = Residential

Com. = Commercial
Mf = Manufacturing

CF = Community Facility

Table 1.8-2: RWCDS Analysis Framework Table

Description of Existing and Proposed Conditions **Part II - RWCDS Analysis Framework Table**

	EXISTING CONDITION	NO-ACTION CONDITION	WITH-ACTION CONDITION	INCREMENT
Land Use				
Residential	☐ Yes ☑ No	☐ Yes ☑ No	☑ Yes ☐ No	
If "yes," specify the following:				
Describe type of residential structures	N/A	N/A	Two 9-story multifamily	
No. of dwelling units	N/A	N/A	392	392
No. of low- to moderate-income units	N/A	N/A	78	78
Gross floor area (sq. ft.)	N/A	N/A	354,508	354,508
Commercial	☐ Yes ☑ No	☐ Yes ☑ No	☑ Yes ☐ No	
If "yes," specify the following:				
Describe type (retail, office, other)	N/A	N/A	Retail, Office, Trade School, Art Studio (UGs 6 and 9)	
Gross floor area (sq. ft.)	N/A	N/A	Retail: 24,041; Office: 23,902; Trade School: 71,744 Art Studio: 6,552	126,239
Manufacturing/Industrial	Yes	Yes	Yes	
If "yes," specify the following:				
Type of Use	UG 16 auto repair and food distribution	UG 16 auto repair and food distribution	UG 16 food distribution	
Gross floor area (sq. ft.)	94,675	94,675	27,109	-67,566
Open storage area (sq. ft.)	N/A	N/A	N/A	
If any enclosed activities, specify:	N/A	N/A	N/A	
Community Facility	☐ Yes ☑ No	☐ Yes ☑ No	☑ Yes ☐ No	
If "yes," specify the following:				
Type of Use	N/A	N/A	UG 4 Community Center	
Gross floor area (sq. ft.)	N/A	N/A	10,000	10,000
Vacant Land	☐ Yes ☑ No	☐ Yes ☑ No	☐ Yes ☑ No	
If "yes", describe:	N/A	N/A	N/A	
Publicly Accessible Open Space	☐ Yes ☑ No	☐ Yes ☑ No	☐ Yes ☑ No	
If "yes," specify type (mapped City, State, or Federal Parkland, wetland-mapped or otherwise known, other):	N/A	N/A	N/A	
Other Land Uses	☐ Yes ☑ No	☐ Yes ☑ No	☐ Yes ☑ No	
If "yes," describe:	N/A	N/A	N/A	
Parking				
Garages	☐ Yes ☑ No	☐ Yes ☑ No	☑ Yes ☐ No	
If "yes," specify the following:				
No. of public spaces	N/A	N/A	0	0
No. of accessory spaces	N/A	N/A	160	160

	EXISTING CONDITION	NO-ACTION CONDITION	WITH-ACTION CONDITION	INCREMENT
Operating hours	N/A	N/A	24/7	
Attended or non-attended	N/A	N/A	Non-Attended	
Lots	☑ Yes ☐ No	☑ Yes ☐ No	☐ Yes ☑ No	
If "yes," specify the following:				
No. of public spaces	23	23	N/A	
No. of accessory spaces	0	0	N/A	
Operating hours	24/7	24/7	N/A	
Other (includes street parking)	☐ Yes ☑ No	☐ Yes ☑ No	☐ Yes ☑ No	
If "yes," describe:	N/A	N/A	N/A	
Population				
Residents	☐ Yes ☑ No	☐ Yes ☑ No	☑ Yes ☐ No	
If "yes," specify number:	N/A	N/A	822	822
Briefly explain how the number of residents was calculated:	Dwelling units X 2.10 (per 2015-2019 Census average household size Queens CD 1)			
Businesses	☑ Yes ☐ No	☑ Yes ☐ No	☑ Yes ☐ No	
If "yes," specify the following:				
No. and type	2 wholesale bakeries; 1 autobody; 1 software company; 1 parking lot, 1 logistics company; 1 construction company	2 wholesale bakeries; 1 autobody; 1 software company; 1 parking lot, 1 logistics company; 1 construction company	8 local retail; 1 food distributor; 2 trade schools; 1 art studio; 2 professional offices	
No. and type of workers by business	**24 total (Employment data provided by Applicant)**	**24 total (Employment data provided by Applicant)**	**396 total (Use, employee, and visitor breakdown provided in appendex Excel Sheet)**	372
No. and type of non-residents who are not workers				
Briefly explain how the number of businesses was calculated:	Employees: 3 employees per 1,000 SF for local retail, general community facility, and construction trade school; 1 employee per 25 DU; 1 employee per 50 attended parking spaces; 1 employee per 515 GSF for film trade school; 1 employee per 250 SF office use; ; 3 employees for food distributor use (actual employment information from Applicant); and 1 employee per 400 SF for artist studio			
Other (students, visitors, concert-goers, *etc*.)	☐ Yes ☑ No	☐ Yes ☑ No	☐ Yes ☑ No	
If any, specify type and number:	N/A	N/A	N/A	
Briefly explain how the number was calculated:	Trip generation factors will be based on the 2014 CEQR TM; Downtown Jamaica Redevelopment Plan FEIS; Melrose Commons FEIS; and Steiner Studios Media Campus FEIS			
Zoning				
Zoning classification	R5	R5	MX (M1-5/R6A)	
Maximum amount of floor area that can be developed	2.00	2.00	5.00	
Predominant land use and zoning classifications within land use study area(s) or a 400 ft. radius of proposed project	Industrial, commercial, community facility, residential; R5, R6, R6B/C1-3	Industrial, commercial, community facility, residential; R5, R6, R6B/C1-3	Industrial, commercial, community facility, residential; R5, R6, R6B/C1-3	
Attach any additional information that may be needed to describe the project. If your project involves changes that affect one or more sites not associated with a specific development, it is generally appropriate to include total development projections in the above table and attach separate tables outlining the reasonable development scenarios for each site.				

2. Environmental Review

Chapter 4: Land Use, Zoning, and Public Policy

The *CEQR Technical Manual* recommends procedures for analysis of land use, zoning and public policy to ascertain the impacts of a project on the surrounding area. Land use, zoning and public policy are described in detail below. This section considers existing conditions, development trends, zoning, and other public policies in relation to the Projected Development Sites and the area in which the Proposed Actions may have an effect. Because the Proposed Actions would enlarge the bulks for residential and community facility uses, increase maximum allowed base height and building height, and permit development of uses (commercial and manufacturing uses) that are not permitted as of right under the existing R5 zoning, a preliminary assessment of Land Use, Zoning, and Public Policy is provided.

Methodology

Existing land uses were determined by reference to the New York City Zoning and Land Use (Zola) database and PLUTOTM 20v4 shapefiles. These uses were then confirmed through site visits. The evaluation of lots within the 400-foot Study Area were performed with reference to New York City Zoning Maps and the Zoning Resolution of the City of New York and served as the basis for the zoning evaluation of the Future No-Action and Future With-Action Conditions. Public Policy research was performed through an evaluation of New York City Department of City Planning (NYCDCP) and other city agencies programs and documentation.

Land Use

The *CEQR Technical Manual* suggests that a land use, zoning and public policy study area should generally extend 400 feet from the Affected Area. Existing land uses within approximately 400 feet of the Affected Area are presented in **Figure 2.4-1**.

Figure 2.4-1: Area to be Rezoned Overlaid with Existing Land Use Map

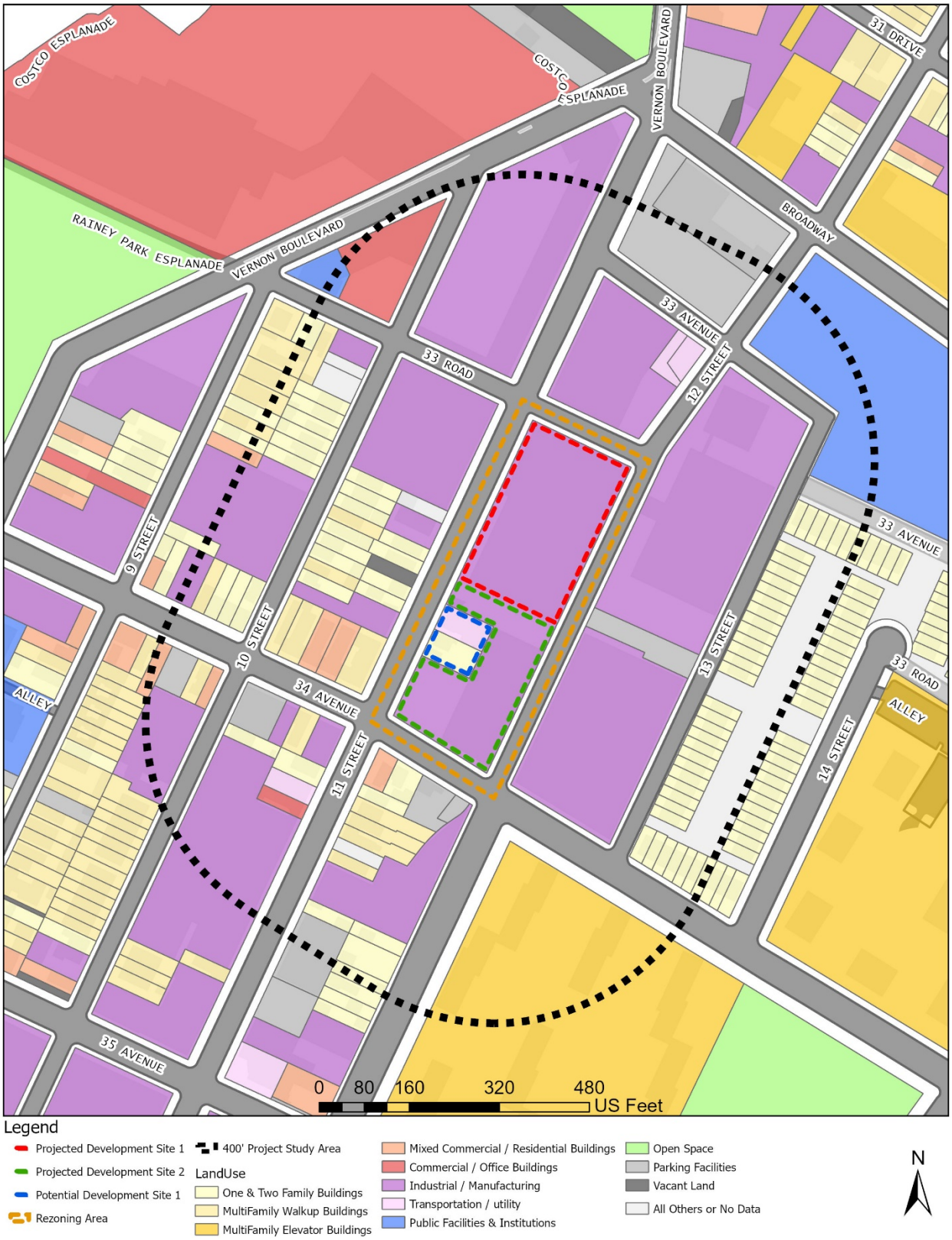

Existing Conditions

Land Use Study Area

As shown in **Figure 2.4-1** and stated in **Section 1.3**, the surrounding area is a mix of residential, commercial, light industrial, and community facility uses. Several parking facilities intersperse in the mixed land uses as well as one vacant site. The predominant land uses in the area are light industrial and residential.

Residential uses are characterized by 2- to 4-story brick buildings, used as one- and two-family dwelling buildings and multi-family walk-up buildings, which typically are located midblock along 9th, 10th, and 11th Streets. Bordered by 12th and 24th Streets, and 34th and 36th Avenues, a large New York City Housing Authority's (NYCHA's) development called Ravenswood Houses at the southeast corner of the surrounding area takes up nearly four blocks (Blocks 332, 335, 523, and 559, Lot 2). Opened in 1951, the complex consists of 31 six- and seven-story elevator buildings totaling 2,163 apartments, with an estimated 4,150 low-income residents. Across 34th Avenue to the north of the Ravenswood Houses between 14th Street and 21st Street, another large-scale residential development located just outside of the surrounding area boundary is North Queensview Homes (Block 528, Lot 50), a five-acre cooperative community with seven 14-story elevator buildings, totaling 364 dwelling units. Farther east of the North Queensview Homes across 21st Street, the entirety of Block 557 bounded by 21st Street, 33rd Road, 34th Avenue, and Crescent Street is owned by Queensview Inc. Founded in 1950, it is a residential cooperative housing complex with 14 separate 15-story elevator buildings and 726 apartments, along with over 10 acres of park land, mature trees, and walking paths. Additionally, there is a townhouse development two block to the east between 13th and 14th street. The development, known as the Estates at Hallett's Cove were developed in conjunction with the New York City Housing Partnership in the 1990's and consists of 107 three-story two-family attached residences. It is located in the adjacent R6 zoning district.

Industrial uses within the surrounding area are typically located on larger lots at block ends with a range of uses, including a DHL warehouse, bakery wholesalers and warehouses, maintenance and construction wholesalers, media studios, artist studios, steel fabricators, and stone businesses. Other industrial uses of note in the area include the 63,850 GSF warehouse at 12-01 34th Avenue, the 34,692 GSF warehouse at 33-01 11th Street, and the 34,225 GSF warehouse operating as a marble supplier at 33-53 10th Street.

There are multiple community facility uses in the surrounding area. The Noguchi Museum, serving as a gallery dedicated to the architect Isamu Noguchi, is located within the surrounding area at 33rd Road bounded by 10th Street and Vernon Boulevard, which includes a museum building and a sculpture garden. The Phoenix House, a drug rehabilitation center, is located southwest of the Project Area on Vernon Boulevard just south of 34th Avenue on Block 323.Long Island City High School is located to the northeast of the Project Area along Broadway between 12th Street and 21st Street. Other notable uses in the surrounding area include Socrates Sculpture Park whose lot consists of 77,345 square feet in the adjacent R6B/R7X/C1-3 zoning district, Costco whose lot consists of 356,000 square feet and is located in the adjacent R5 zoning district, and Rainey Park to the northwest along the East River whose lot consists of 403,608 square feet.

Affected Area

A full breakdown of each lot within the Affected Area can be found in **Section 1.4**.

Projected Development Site 1 consists of two separate lots (Block 318, Lots 15 and 22) located at the northern end of the block with frontage on 11th Street, 12th Street, and 33rd Road. Lot 15 is a 29,470 SF through lot improved with a 1-story 27,950 GSF industrial building constructed in 1972, currently occupied by a bakery warehouse and a construction management company. Lot 22 is a 27,668 SF corner lot improved with a 1-story 27,225 GSF industrial building constructed around 1930, currently occupied by a wholesale bakery and a logistics company.

Projected Development Site 2 (Block 318, Lot 1) is located at the southern end of the block and is an irregularly shaped lot with frontage along 11th Street, 12th Street, and 34th Avenue. It is improved with 39,500 GSF of industrial floor area across 3 separate buildings: a 3-story building running along the eastern portion of the block, which contains a software company and an autobody shop; a 1-story industrial building located on the interior portion of the lot along 34th Avenue, which is occupied by Verifone Media; and a 1-story accessory building to a public parking lot with a curb cut along 11th Street. A surface lot is also located on the southwest portion of the block, and is a private parking lot for employees and work vehicles associated with the buildings on Lot 1.

Other lots within the Affected Area include Lots 9 and 11, both of which are independently owned. Both lots have frontage along 11th Street and are located next to each other on the western portion of the block. The buildings include a 2-story, 2-family home (.37 FAR) and an accessory metal shed on Lot 9 and a 1-story utility building (1.00 FAR) currently occupied by an autobody shop on Lot 11.

Future No-Action Condition

Land Use Study Area

There are no active construction permits within the study area currently. The nearest active development is located at 34-31 9th Street (Block 324, Lot 13), just outside of the 400-foot study area radius. It is the construction of a 5,787 GSF new residential building, which will include 6 dwelling units and rise to a height of 3 stories. Vernon Boulevard-Broadway Rezoning, located two blocks northwest to the project site, was approved on October 17, 2019. The rezoning will facilitate 351 residential units, approximately 11,236 square feet of commercial uses (local retail), and 6,882 square feet of community facility uses (medical office).

Given the residential uses of the surrounding active construction permit and the residential, commercial, and community facility uses proposed in the Vernon Boulevard-Broadway Rezoning, the existing land use conditions would remain the same with the No-Action Condition in the 400-foot surrounding area.

Affected Area

Within the Affected Area, existing conditions are expected to remain the same. The industrial lots (Block 318, Lots 1, 15, and 22) would continue to be legal non-conforming uses within the existing R5 zoning district.

Future With-Action Condition

Land Use Study Area

Land use and development patterns in the land use study area are anticipated to remain unchanged in the future with the Proposed Actions. Any new development in the surrounding area would be consistent with the low-density R5 residential zoning and medium-density R6, R6B, and R7X residential zoning, C1-3 commercial overlays, or the proposed rezoning from R5 to M1-5/R6A (MX) as discussed previously.

Affected Area

Projected Development Site 1 (Block 318, Lots 15 and 22; Applicant-Owned)

The lots would have a combined projected lot size of 57,138 SF, and would be developed with an 8-story 95-foot-tall mixed commercial and residential building of 338,474 GSF (284,331 ZSF; 4.98 FAR), including 204,831 GSF (194,873 ZSF; 3.40 FAR) of residential use, 90,251 GSF (89,459 ZSF; 1.56 FAR) of commercial use, and 43,392 GSF of cellar level parking. The building would contain 229 dwelling units (approximately 850 ZSF average size), at least 46 of which would be permanently set aside as affordable. Proposed commercial uses would include 11,955 GSF of local retail stores (UG 6), 6,552 GSF for an artist's studio (UG 9), and 71,744 GSF for two trade schools and accessory offices (UG 9). 100 parking spaces would be required for the residential uses, and all spaces would be provided in the 43,392 GSF enclosed garage at the cellar level accessible by a curb cut on 12th Street. The proposed building has a height of 95 feet after a 15-foot setback above the base height of 75 feet. The development would wrap the block, maintaining a continuous street wall on each frontage.

Projected Development Site 2 (Block 318, Lot 1; Applicant-Owned)

Projected Development Site 2 would be improved with an 8-story, 95-foot-tall mixed-use commercial, community facility, industrial/manufacturing, and residential building with 163 dwelling units (approximately 1850 ZSF average size), at least 33 of which would be permanently set aside as affordable. The building would contain 248,095 GSF (207,201 ZSF; 4.99 FAR), including 149,677 GSF (138,318 ZSF; 3.33 FAR) of residential use, 35,988 GSF (34,519 ZSF; 0.83 FAR) of commercial use, 10,000 GSF (100,000 ZSF; 0.24 FAR) of community facility use, 27,109 GSF (24,364 ZSF; 0.59 FAR) of manufacturing use, and 25,321 GSF of cellar level parking. The ground floor would contain 12,086 GSF of local retail store uses (UG 6) and 27,109 GSF of food distribution warehouse uses (UG 16; no manufacturing on site), the second floor would contain 10,000 GSF of community facility (UG 4) and 23,902 GSF of general office uses, and floors three through nine would contain 149,677 GSF of residential uses. 60 residential accessory parking spaces would be required, and would be provided at the cellar level accessible from a curb cut on 11th Street.

Conclusion

The Proposed Actions would permit the development of residential, commercial, community facility, and light-industrial uses at a higher density than that is currently allowed within the Affected Area, which would be in character with existing mixed residential, commercial, industrial, and institutional uses. The density and uses permitted by the Proposed Actions would be consistent with nearby mid-rise multi-family buildings mostly along 34th and 35th Avenues, including Ravenswood Houses, a large NYCHA development complex to the southeast of the Affected Area which consists of 31 six- and seven-story elevator residential buildings, North Queensview Homes, a cooperative community with seven 14-story elevator residential buildings, and Queensview, a residential cooperative housing complex with 14 fifteen-story elevator buildings.

Based on the analysis above, the Applicant believes that the proposed rezoning would allow for the productive redevelopment of the Affected Area with land uses that are similar to the surrounding area and therefore the Proposed Actions would not generate a land use that would be incompatible with surrounding uses. There would be no significant adverse impacts to Land Use as a result of the Proposed Actions, and further analysis is not required.

Zoning

The *CEQR Technical Manual* suggests that a zoning study area should extend 400 feet from the affected area. Existing zoning districts within approximately 400 feet of the Project Site are presented in **Figure 2.4-2**. The proposed zoning map amendment would affect the following lots: Block 318, Lots 1, 9, 11, 15, and 22 from R5 to M1-5/R6A (MX).

Figure 2.4-2: Area to be Rezoned Overlaid with Existing Zoning Map

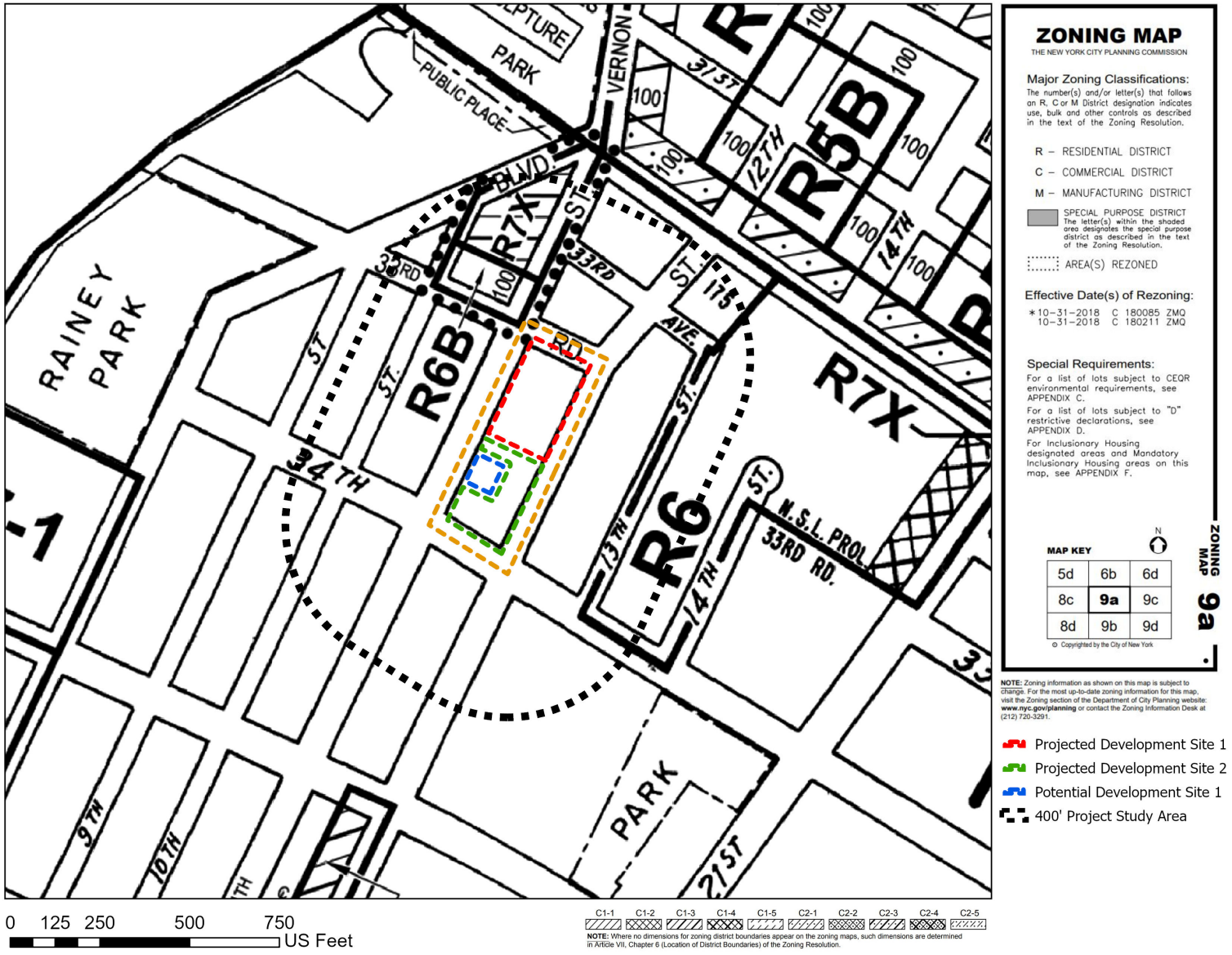

Existing Conditions

Zoning Study Area

The zoning districts within 400 feet of the Affected Area are R5, R6, R6B, R7X, and C1-3 commercial overlays.

Table 2.4-1: Zoning Districts in the Surrounding Area

Zoning District	Type and Use Group (UG)	Floor Area Ratio (FAR)	Parking (Required Spaces)
R5	Non-Contextual Residential UGs 1-4	1.25 FAR - Residential 2.00 FAR - Community Facility	85% of DU; 0 for IRHU
R6	Non-Contextual Residential UGs 1-4	0.78-2.43 FAR – Residential 4.80 FAR - Community Facility	70% of DU; 0 for IRHU
R6B	Contextual Residential UGs 1-4	2.20 FAR - Residential 2.00 FAR - Community Facility	50% of DU; 0 for IRHU
R7X	Contextual Residential UGs 1-4	5.00 FAR – Residential 5.00 FAR - Community Facility	50% of DU; 0 for IRHU
C1-3 Commercial Overlay	Local Retail UGs 1-6	1.00 FAR - Commercial (R1-R5B) 2.00 FAR - Commercial (R5B - R10X)	1 per 400 sf

Source: Zoning Handbook, New York City Department of City Planning, 2019

Existing zoning districts in the surrounding area include:

R5

R5 district is a non-contextual residential district that permits a residential FAR of 1.25 and community facility FAR of 2.00. The bulk restrictions in this district include a height limit of 40 feet with a maximum street wall height of 30 feet, a setback of 15 feet that is required for any building with a building height over 30 feet, and a setback from a rear or side yard for any portion of a building that exceeds a height of 33 feet. Despite the bulk restrictions, R5 district produces a variety of housing types that include three- and four story attached houses in addition to small apartment buildings. This range of housing types that is found in R5 districts serves an important role in providing a transition between lower- and higher- density neighborhoods and ensure compatibility with neighborhood scale.

In addition to requiring off-street parking for 85 percent of the dwelling units, R5 district also require a minimum of 18 feet deep for front yards to prevent cars parked on-site from protruding onto the sidewalk. Parking is permitted in the side yard, rear yard, garage, or front yard within the side ribbon when the lot is wider than 35 feet.

R6

R6 is a medium-density non-contextual zoning district widely mapped in built-up, medium-density areas in Brooklyn, Queens, and the Bronx. R6 districts produce high lot coverage, five- to seven-story apartment buildings. The character of R6 districts can range from neighborhoods with a diverse mix of building types and heights to large-scale "tower in the park" developments such as Ravenswood in Queens and Homecrest in Brooklyn. Developers can choose between two sets of bulk regulations. Standard height factor regulations, introduced in 1961, produce small multi-family buildings on small zoning lots and, on larger lots, tall buildings that are set back from the street. Optional Quality Housing regulations produce high lot coverage buildings within height limits that often reflect the scale of older, pre-1961 apartment buildings in the neighborhood.

R6 Height Factor district allows for residential development with a FAR range from 0.78 to 2.43 while R6 Quality Housing district allows for residential development up to 3.60 FAR in IHDAs and MIH Areas. Community facility uses in both R6 Height Factor and R6 Quality Housing zoning districts are permitted with FAR up to 4.80. Under the R6 Quality Housing zoning regulation, the building form requires a setback above the maximum base height and a maximum building height of up to 115 feet for Inclusionary Housing buildings with a qualifying ground floor.

Off-street parking is generally required for 70 percent of a building's dwelling units, but requirements are lower for income-restricted housing units (IRHU) and are further modified in certain areas, such as within the Transit Zone and the Manhattan Core, or for lots less than 10,000 square feet. Parking can be waived if five or fewer spaces are required.

R6B

R6B districts are often traditional row house districts, which preserve the scale and harmonious streetscape of neighborhoods of four-story attached buildings developed during the 19th century. Many of these houses are set back from the street with stoops and small front yards that are typical of Brooklyn's "brownstone" neighborhoods, such as Park Slope, Boerum Hill and Bedford Stuyvesant.

The FAR of 2.0 and the mandatory Quality Housing regulations also accommodate apartment buildings at a similar four- to five-story scale. The base height of a new building before setback must be between 30 and 40 feet and the maximum height is 50 feet. For buildings providing a qualifying ground floor, the maximum base height and overall height increase by 5 feet. Higher maximum FAR are available for buildings participating in the Inclusionary Housing program or that provide certain senior facilities.

Off-street parking spaces are required for 50% of the dwelling units. However, requirements are lower for income-restricted housing units (IRHU) and are further modified within the Transit Zone. Parking can be waived if five or fewer spaces are required.

R7X

R7X contextual districts, created in 1987, are medium density districts designed to produce new Quality Housing buildings with much more flexibility in the building envelope. These districts often result in building heights of between 12 and 14 stories. Bulk regulations ensure the lower portions of the buildings are compatible with older medium density buildings, whether this scale is being newly established or preserved. These districts are often, but not exclusively, mapped along wide streets. They can be found in Mott Haven, The Bronx; Williamsburg, Brooklyn; East Harlem, Manhattan; and in Woodside and Hunters Point, Queens.

The residential and community facility FAR in R7X districts are both 5.0. Above a base height of 60 to 85 feet, the building must be set back a depth of 10 feet on a wide street and 15 feet on a narrow street before rising to its maximum height of 120 feet. If providing a qualifying ground floor, the maximum base height is 95 feet and the maximum height of the building is 125 feet. To maintain the traditional streetscape, the street wall of a new building can be no closer to the street line than any adjacent street wall but need not be farther than 10 feet. The building must have interior amenities for residents pursuant to the Quality Housing Program.

Off-street parking is generally required for 50 percent of a building's dwelling units, but requirements are lower for income-restricted housing units (IRHU) and are further modified in certain areas, such as within the Transit Zone and the Manhattan Core, or for lots 10,000 square feet or less. Off-street parking requirements can be waived if 15 or fewer parking spaces are required.

C1-3 Commercial Overlay

C1-3 districts are commercial overlays mapped within residence districts. Mapped along streets that serve local retail needs, they are found extensively throughout the city's lower- and medium-density areas and occasionally in higher-density districts.

Typical retail uses include neighborhood grocery stores, restaurants and beauty parlors. In mixed buildings, commercial uses are limited to one or two floors and must always be located below the residential use.

When commercial overlays are mapped in R1 through R5 districts, the maximum commercial floor area ratio (FAR) is 1.0; when mapped in R6 through R10 districts, the maximum commercial FAR is 2.0. Commercial buildings are subject to commercial bulk rules.

Overlay districts differ from other commercial districts in that residential bulk is governed by the residence district within which the overlay is mapped. All other commercial districts that permit residential use are assigned a specific residential district equivalent. Unless otherwise indicated on the zoning maps, the depth of overlay districts ranges from 100 to 200 feet.

Affected Area

The Affected Area is zoned R5, which permits low-density non-contextual residential developments along with community facility uses.

Future No-Action Condition

Zoning Study Area and Affected Area

No changes to zoning would occur in the future without the Proposed Actions. Existing zoning patterns would remain. The Affected Area would continue to be subject to R5 zoning regulations.

Future With-Action Condition

Zoning Study Area

No changes to zoning would occur in the surrounding area in the future with the Proposed Actions.

Affected Area

Block 318, Lots 1, 9, 11, 15, and 22 would be rezoned from an existing R5 zoning district to an M1-5/R6A (MX) zoning district. The maximum permitted building height within the Affected Area would also increase to 95 feet and the maximum base height would rise up to 75 feet per a zoning text amendment. A Mandatory Inclusionary Housing Area would be established within the Affected Area to further enlarge the permitted bulk and provide affordable housing units on site.

Conclusion

The proposed zoning would induce development consistent with nearby mid-rise multi-family buildings to the southeast along 34th and 35th Avenues, commercial buildings to the northwest along Vernon Boulevard, and light industrial buildings around the Affected Area. The proposed zoning district is mapped at the confluence of two wide streets, 11th Street and 34th Avenue, which is appropriate for a higher density of mixed residential, commercial, community facility, and light industrial uses while maintaining the mixed-use character of nearby side streets. The rezoning would not adversely affect surrounding zoning patterns, nor would it be incompatible with those zoning districts. Therefore, no significant adverse impacts are anticipated to zoning.

Public Policy

The project site is not part of, or subject to, an Urban Renewal Plan (URP), adopted community 197-a Plan, Solid Waste Management Plan, Business Improvement District (BID), Industrial Business Zone (IBZ), or the New York City Landmarks Law. The Proposed Actions are also not a large publicly sponsored project, and as such, consistency with the City's PlaNYC 2030 for sustainability is not warranted.

New York City Coastal Zone

The Project Site is located within the boundaries of the New York City Coastal Zone and is subject to CEQR

discretionary review procedures; therefore, the Proposed Actions must be reviewed and assessed for consistency with the policies set forth in the New York City Waterfront Revitalization Program (WRP). The WRP establishes the City's policies for waterfront planning, preservation and development projects to ensure consistency over the long term. The goal of the program is to maximize the benefits derived from economic development, environmental conservation and public use of the waterfront while minimizing any potential conflicts among these objectives. The WRP Consistency Assessment Form (CAF) was completed and is provided in **Appendix D**. The CAF assists applicants in identifying the relevant WRP policies and certifying that the project is consistent with the WRP.

The Proposed Actions would place two new mixed-use structure in a designated "AE Zone" within the 1% annual chance floodplain (100-year flood zone) as per the 2015 FEMA Preliminary Flood Insurance Rate Maps (PFIRM) and the .2% floodplain per the 2007 effective Flood Insurance Rate Maps (FIRMS).

Waterfront Revitalization Program

Actions that are located within the designated boundaries of New York City's Coastal Management Zone are subject to an assessment for consistency with the City's Local Waterfront Revitalization Program (WRP). The WRP includes policy objectives that prioritize the development of water-dependent and water-enhancing uses on Coastal Management Zone properties, mandate public access to the waterfront within certain zoning districts, offer construction guidelines for flood zones, and address the maintenance of water quality. Since the rezoning area is located in the Coastal Management Zone, a consistency review is warranted for the Proposed Actions (See **Appendix D**).

The Proposed Actions would support and facilitate residential, commercial, community facility, and light industrial redevelopment in appropriate Coastal Zone areas, integrate consideration of climate change and sea level rise into the planning and design of waterfront residential, commercial, and light industrial development, minimize loss of life, structures, infrastructure, and natural resources caused by flooding and erosion, and increase resilience to future conditions created by climate change.

Analysis

Because the Affected Area is located within the boundaries of the New York City Coastal Zone and is subject to CEQR discretionary review procedures, the Proposed Actions must be reviewed and assessed for consistency with the policies and conditions set forth in the New York City WRP.

The WRP Consistency Assessment Form (CAF) was completed (See **Appendix D**) to determine if the Proposed Action is consistent with the WRP policies. The Project Site is within the 2007 Effective FEMA Flood Insurance Rate Map (FIRM) 0.2% chance annual floodplain and the 2015 Preliminary FEMA Flood Insurance Map (PFIRM) 1% chance annual floodplain. No hazardous features would be introduced to the area under the Proposed Actions. **Figure 2.4-3** below shows the 2007 FIRM comparison to the 2015 PFIRM. Per the NYC WRP Coastal Zone Boundary Map, the Affected Area is not within any Coastal Zone Boundary Special Area Designations.

The applicable policies are discussed below.

Figure 2.4-3: 2007 FIRM and 2015 PFIRMS

Comparison of Flood Hazard

Effective & Preliminary Flood Hazards

FEMA

Effective	
POI Longitude/Latitude	-73.9369, 40.766
Effective FIRM Panel	3604970093F
Effective Date	9/5/2007
Flood Zone	X
Static BFE*	Not Available
Flood Depth	Not Available
Vertical Datum	Not Available

Preliminary	
POI Longitude/Latitude	-73.9369, 40.766
Preliminary FIRM Panel	3604970093G
Preliminary Issue Date	1/30/2015
Flood Zone	AE
Estimated Static BFE*	12.0 Feet
Estimated Flood Depth	Not Available
Vertical Datum	NAVD88

* A **Base Flood Elevation** is the expected elevation of flood water during the 1% annual chance storm event. Structures below the estimated water surface elevation may experience flooding during a base flood event.

Hazard Level	Flood Hazard Zone
High Flood Hazard	**AE, A, AH, AO, VE and V Zones.** Properties in these flood zones have a 1% chance of flooding each year. This represents a 26% chance of flooding over the life of a 30-year mortgage.
Moderate Flood Hazard	**Shaded Zone X.** Properties in the moderate flood risk areas also have a chance of flooding from storm events that have a less than 1% chance of occuring each year. Moderate flood risk indicates an area that may be provided flood risk reduction due to a flood control system or an area that is prone to flooding during a 0.2% annual chance storm event. These areas may have been indicated as areas of shallow flooding by your community.
	Unshaded Zone X. Properties on higher ground and away from local flooding sources have a reduced flood risk when compared to the Moderate and High Flood Risk categories. Structures in these areas may be affected by larger storm events, in excess of the 0.2% annual chance storm event.
Low Flood Hazard	**Insurance Note:** High Risk Areas are called 'Special Flood Hazard Areas' and flood insurance is mandatory for federally backed mortgage holders. Properties in Moderate and Low Flood Risk areas may purchase flood insurance at a lower-cost rate, known as Preferred Risk Policies. See your local insurance agent or visit https://www.fema.gov/national-flood-insurance-program for more information.

Disclaimer: This report is for informational purposes only and is not authorized for official use. The positional accuracy may be compromised in some areas. Please contact your local floodplain administrator for more information or go to msc.fema.gov to view an official copy of the Flood Insurance Rate Maps.

Service Layer Credits: Source: Esri, Maxar, GeoEye, Earthstar Geographics, CNES/Airbus DS, USDA, USGS, AeroGRID, IGN, and the GIS User Community

7/7/2020 11:38:22 PM

POLICY 1: Support and facilitate commercial and residential redevelopment in areas well-suited to such development

Policy 1.1: Encourage commercial & residential redevelopment in appropriate coastal zone areas.

The Proposed Action would permit additional commercial uses in the Affected Area. The area fronts a wide road and is bounded by two main commercial corridors in the Rockaway Park neighborhood that are both mapped with commercial overlays. The Proposed Action would add to the economic resiliency of the area and permit a wider range of potential tenants within the Affected Area, and therefore the Proposed Action is consistent with policy 1.1.

Policy 1.3: Encourage redevelopment in the Coastal Zone where public facilities and infrastructure are adequate or will be developed

The Project Site is located in an area with fully developed infrastructure and adequate capacity to support the proposed project. The surrounding community provides supportive infrastructure complementary to commercial uses, such as residential neighborhoods and open space resources. Additionally, the Project Site is located near adequate roadway access and mass-transit available within walking distance to support the proposed development.

Policy 1.5: Integrate consideration of climate change and sea level rise into the planning and design of waterfront residential and commercial development pursuant to WRP Policy 6.2.

The Proposed Actions are consistent with this policy. The new developments would incorporate building features as required by the New York City Building Code Appendix G Flood Resistant Construction Standards.

POLICY 5: Protect and Improve Water Quality in The New York City Coastal Area

Policy 5.1: Manage direct or indirect discharges to waterbodies.

Policy Considerations:

A. *Minimize the negative impacts to fish and wildlife habitats caused by artificial input of large quantities of freshwater into tidal or brackish waterbodies and enhances freshwater inputs when it can be demonstrated that there will be ecological benefits.*
B. *Minimize the negative impacts to fish and wildlife habitats caused by effluent discharge that result in thermal changes from steam generating, heating, air conditioning, and industrial facilities.*
C. *Limit discharge of vessel wastewaters into waterways by providing adequate pumpout facilities.*

While the Proposed Development would not involve industrial use that would result in a new direct or indirect discharge into water bodies, the Proposed Actions will be required to ensure that the site would not be impacted by hazardous materials. In the event that hazardous materials are identified on the site, the Proposed Actions would require remediation which would prevent further discharge of such contamination into the groundwater and waterways. Therefore, the Proposed Actions would minimize the negative impacts on fish and wildlife habitats caused by effluent discharge.

Policy 5.2: Protect the quality of New York City's waters by managing activities that generate nonpoint source pollution.

Policy Considerations:

A. *Use sustainable stormwater management strategies, such as green infrastructure, use of permeable surfaces, on-site detention, and the preservation and enhancement of vegetation, wetlands, and ecosystems to minimize nonpoint discharge into coastal waters of excess nutrients, organics, eroded soils, and pollutants, and to control stormwater runoff from roadways and other developed areas.*
B. *Minimize nonpoint source pollution of coastal waters using the following approaches listed in order of priority: (1) avoid pollution by limiting sources; or (2) reduce pollutant loads to recipient waters by managing unavoidable sources.*
C. *Limit sources of atmospheric deposition of pollutants to New York City waterbodies and streams, particularly from nitrogen sources, which may deteriorate water quality or impair aquatic habitats.*
D. *As described in WRP Policy 7.1, use accepted best management practices to prevent the run-off of pollutants and potentially contaminated sediment into waterways.*

Any required remediation of the Project Sites would occur pursuant to applicable City, State, and Federal regulatory guidance. All control measures will comply with the Stormwater Pollution Prevention Plan (SWPPP). Control measures, such as an Erosion and Sediment Control Plan during site remediation and construction, and additional measures shall be implemented if conditions change or warrant additional control measures. With these stormwater management provisions in place, pollution and discharge into coastal waters will be managed to avoid impact. Accordingly, the Proposed Actions is consistent with Policy 5.2.

POLICY 6: Minimize Loss of Life, Structures, Infrastructure, and Natural Resources Caused by Flooding and Erosion, and Increase Resilience to Future Conditions Created by Climate Change.

Policy 6.1 Minimize losses from flooding and erosion by employing non-structural and structural design measures appropriate to the site, the use of the property to be protected, and the surrounding area.

Under Policy 6, the primary goal for projects within flood hazard areas is to reduce the risks posed by current and future flood events, mainly major storms that are likely to increase due to climate change and sea level rise (SLR).

As the Project Site falls within the 1% annual chance floodplain, the proposed buildings would be subject to compliance with NYC Building Code Appendix G. Appendix G requires owners of severely damaged or destroyed buildings in the 1% annual chance floodplain to comply with the flood resistant construction standards of the Building Code when they rebuild. The same requirements are applicable to any new development, or substantially improved properties, whether the development is located in whole or in part within the 1% annual chance floodplain. However, as further discussed in Policy 6.2 below, the proposed buildings' designs incorporate dry-floodproofing building features below-grade to protect the vulnerable feature (electrical utilities and building mechanicals) contained within the cellar level. Dry-floodproofing is a flood resilient construction practice that is designed to seal a building's exterior walls to flood waters, while ensuring that the building has the ability to resist water loads below the expected level of flooding. Therefore,

the Proposed Actions would meet the requirements of building-scale resiliency measures to reduce the risks of damage from current and future coastal hazards and would be consistent with Policy 6.1.

Policy 6.2: Integrate consideration of the latest New York City projections of climate change and sea level rise (as published in New York City Panel on Climate Change 2015 Report, Chapter 2: Sea Level Rise and Coastal Storms) into the planning and design of projects in the city's Coastal Zone.

The following assessment was prepared in accordance with The New York City Waterfront Revitalization Program: Climate Change Adaptation Guidance Document for Policy 6.2. The three basic steps to assessing an action's consistency with Policy 6.2 of the Waterfront Revitalization Program include identifying vulnerabilities and consequences, identifying adaptive strategies, and assessing policy consistency.

1. Identify Vulnerability and Consequences

A) Assess the Project Area's exposure to current and future flood risk (Flood-Evaluation Worksheet)

The information in the following subsections is based on the results of the completed flood evaluation worksheet.

The Project Site is located within the 1% chance annual floodplain based on FEMA's 2015 PFIRM maps. The Project Site will also continue to be located within Zone AE under future flood projections according to the NYC flood hazard mapper. Based on these projections, the Project Site is anticipated to be impacted by future high tides under sea level rise projections.

Based on the proposed buildings' plans, the cellar floor level (base plane) is located 2.2 feet in elevation above grade (NAVD88 Datum). The first-floor building space level is located 12.2 feet in elevation above grade (NAVD88 Datum). The second-floor building space is located 32.2 feet in elevation above grade (NAVD88 Datum).

Regulatory floodplains are defined by the elevation of the base flood (BFE) in relation to the elevation of the ground. According to datum (NAVD88) obtained from the National Oceanic and Atmospheric Administration (NOAA) website for the nearest NOAA station – Horns Hook Station (Station ID 8518668) - the adjusted mean of the higher high-water height (MHHW) is 2.87 feet. Pursuant to the 2015 PFIRM, the 1% flood height for the AE zone in which the project is located in is 12.0 feet.

Based on the results of the calculations completed in the flood evaluation worksheet using site-specific data, **Figure 2.4-5** shows the results of the 1% Flood Elevation and Sea Level Rise projections, and **Figure 2.4-6** shows the results of the MHHW and SLR projections.

Figure 2.4-5: 1% Flood Elevation and SLR Projections

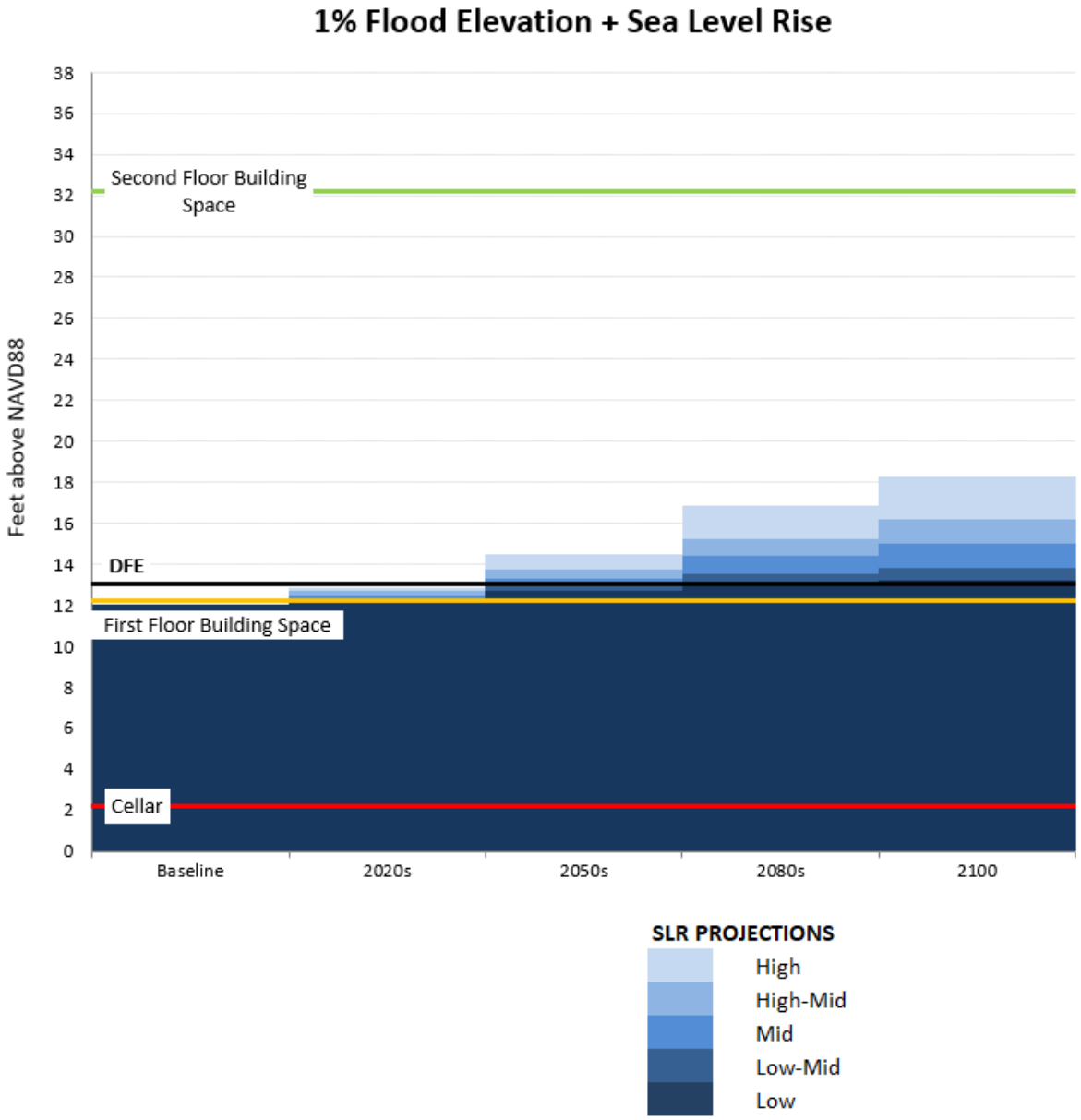

Figure 2.4-6: MHHW and SLR Projections

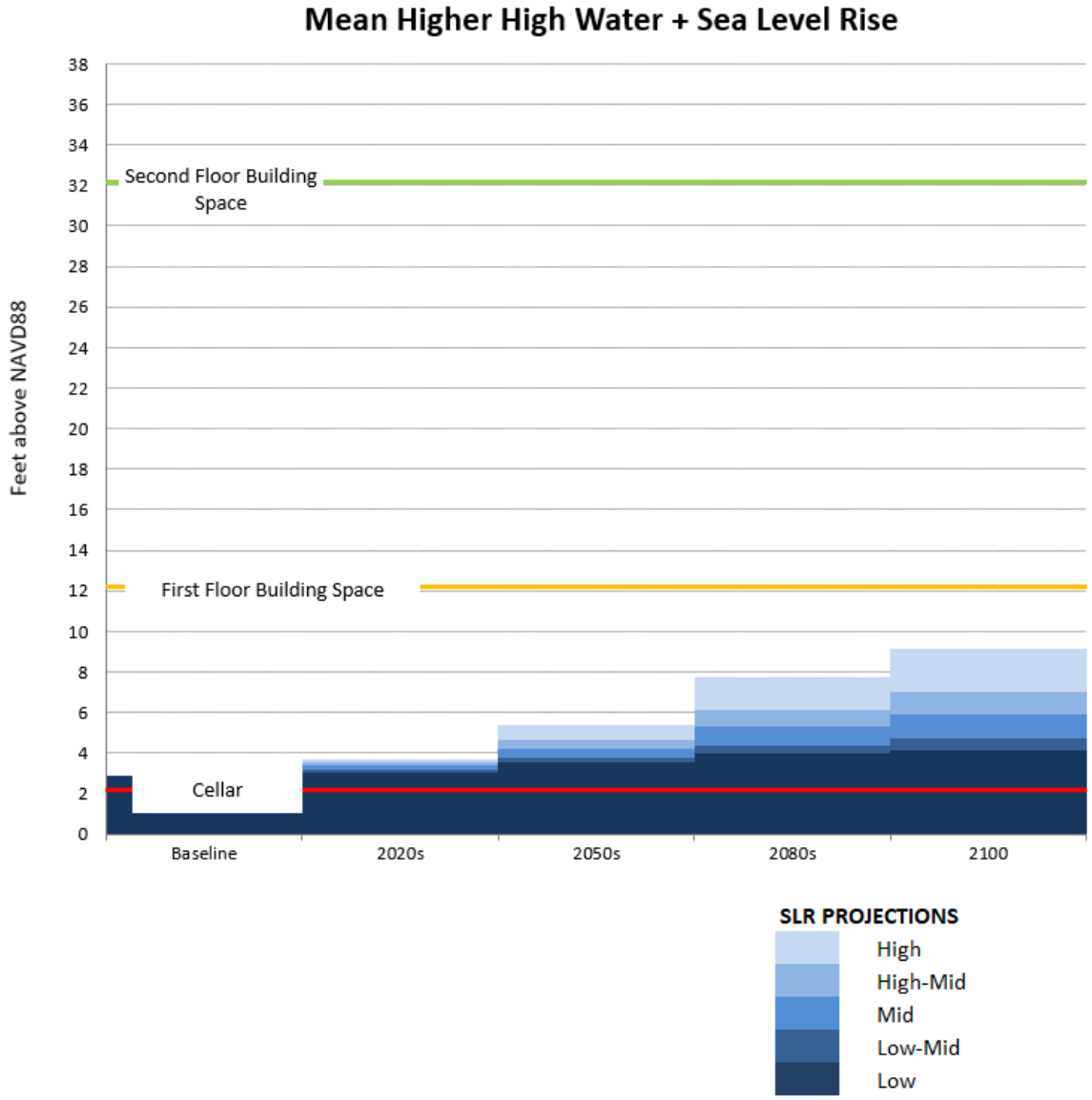

B) Identify any project features that may be located below the elevation of the 1% floodplain over the lifespan of the project under any SLR scenario:

Currently, and in the future, the proposed buildings' cellar floor level has the potential to be impacted by the 1% chance annual floodplain under low SLR projections. The cellar level is located at an elevation of 2.2 feet (NAVD88) and would contain enclosed parking spaces, storage space, electrical utilities, a gas meter room, a telecom room, and building mechanicals. The first-floor building space has the potential to be impacted by the 1% annual chance floodplain by the 2020s under low SLR projections. The first-floor building space is located at an elevation of 12.2 feet (NAVD88) and would contain a residential lobby, retail space, trade school space, and electrical utilities.

C) Identify any vulnerable, critical, or potentially hazardous features that may be located below the elevation of Mean Higher High Water over the lifespan of the project under any sea level rise scenario.

Currently, and in the future, the proposed buildings' cellar floor level has the potential to be impacted by MHHW under low SLR projections. The first-floor level is not projected to be impacted by the MHHW under any SLR projections. Vulnerable features that may be located below the elevation of the MHHW include the enclosed parking spaces and storage space at cellar level.

Critical features that may be located below the MHHW include the electrical utilities, gas meter room, telecom room, and building mechanicals located at cellar level.

There are no potentially hazardous features proposed for the Projected Development Sites.

D) Identify if the project or action would facilitate the development of any vulnerable, critical, or potentially hazardous features, as defined under "Key Terms" per Policy 6.2 guidance[2], within areas exposed to flooding from Mean Higher High Water or 1% Annual Chance Flood by the 2050s under the 90th percentile of sea level rise projections:

The project features that are listed as vulnerable on the cellar level include enclosed parking areas and storage space. On the first-floor building space level, the vulnerable features include commercial space, a residential lobby, and a trade school

The project features that are listed as critical on the cellar level include electrical utilities, a gas meter room, a telecom room, and building mechanicals. On the first floor, the critical features include electrical utilities.

The proposed buildings would not introduce any hazardous features, materials, or substances that, if made insecure, would result in a threat to public health or the environment.

The features listed above as vulnerable and critical, if flooded without protection features identified in Appendix G of the NYC Building Code, could be significantly damaged resulting in the potential disruption of

2 http://www1.nyc.gov/assets/planning/download/pdf/applicants/wrp/revisions-2017/policy-62-guidance-document.pdf

the buildings' functions. To protect these features from damage related to future flood events, the project design includes the employment of floodproofing measures per Appendix G of the NYC building code. With this provision in place, the features would not be considered critical or vulnerable, and the Proposed Actions are in compliance with Policy 6.2.

2) Identify Adaptive Strategies

Because the Project Site is susceptible to the impacts of sea level rise and future flood events, it is recommended that building scale resiliency measures and flood mitigation strategies be considered. Pursuant to *Policy 6.2: Climate Change Adaptation Guidance*, consideration of climate change projections for coastal flooding and sea level rise should be incorporated into the design and planning of projects. The proposed project should identify potential vulnerabilities to, and consequences of, sea level rise and coastal flooding over its lifespan and identify and incorporate design techniques to address these risks.

Recommendations

As indicated above in Policy 6.0, and under Policy 6.2, Step 1(D), the Proposed Actions would employ dry-floodproofing construction measures to protect the vulnerable and critical building features within the cellar level. Additionally, any first-floor space below the DFE would be floodproofed pursuant to Appendix G of the NYC Building Code. The Proposed Project should consider employing future building-scale resiliency measures for the ground floor level to avoid the potential risks related to future coastal flooding. Site-specific vulnerable or critical features include electrical utilities, flooring, and walls. Based on the flood projections above, measures should be considered to increase first-floor building-scale resilience to future flood conditions.

A) Flood Damage Reduction Elements/Controls:

Building scale resilience measures:

- Rigid, closed-cell foam insulation;
- Removable or hinged wainscot panels;
- Elevated outlets;
- Chair rail molding over a gap in the wallboard to prevent wicking; and
- Extra-wide snap on baseboard.

While not required, these building-scale resiliency controls, if implemented, will protect the cellar and first floor building features from the susceptibility of water damage to the interior spaces. The Applicant has been educated about flood risks and mitigation measures and may consider the implementation of the above listed future adaptive flood damage reduction elements.

B) Flood Protection of Adjacent Sites:

The Proposed Developments would not increase stormwater runoff and would not introduce any hazardous features that would impact the health, safety, or welfare of surrounding residents in the event of a flood. Therefore, the Proposed Actions would not affect the flood protection of adjacent sites.

3) Assess Policy Consistency

The Proposed Actions should incorporate dry-floodproofing and/or wet-flood proofing to protect the cellar, first-floor building space and first floor mechanicals levels from current, and future flood events; construction and remediation of the site would be performed pursuant to applicable Local, State, Federal regulations and laws; and The Applicant would consider the employment of future building scale resiliency measures for the ground floor level based on the future flood projections related to the 1% annual chance flood elevation. These future building-scale resiliency measures and adaptive strategizes would minimize the potential damage to site-specific vulnerable or critical features. Therefore, the Proposed Actions are consistent with Policy 6.2 of the Waterfront Revitalization Program and would not jeopardize the intent of the WRP.

Conclusion

The Affected Area is located within the designated boundaries of New York City's Coastal Management Zone, where any action would be required to evaluate its consistency with the Waterfront Revitalization Program policy. With detailed policy review and flood analysis (See **Appendix D**), there are no significant adverse impacts anticipated to WRP policies, and further analysis is not warranted.

Chapter 5: Socioeconomic Conditions

According to the *CEQR Technical Manual*, a socioeconomic assessment should be conducted if a project may be reasonably expected to create socioeconomic changes within the area affected by the project that would not be expected to occur without the project. The following circumstances would typically require a socioeconomic assessment:

- The project would directly displace residential population to the extent that the socioeconomic character of the neighborhood would be substantially altered. Displacement of less than 500 residents would not typically be expected to alter the socioeconomic character of a neighborhood. For projects exceeding this threshold, assessments of the direct residential displacement, indirect residential displacement, and indirect business displacement are appropriate.
- The project would directly displace more than 100 employees. For projects exceeding this threshold, assessments of direct business displacement and indirect business displacement are appropriate.
- The project would directly displace a business that is unusually important because its products or services are uniquely dependent on its location; that, based on its type or location, is the subject of other regulations or publicly adopted plans aimed at its preservation; or that serves a population uniquely dependent on its services in its present location. Information provided in Chapter 4, "Land Use, Zoning, and Public Policy," may be useful in determining whether an assessment is appropriate. If any of these conditions is considered likely, assessments of direct business displacement and indirect business displacement are appropriate.
- The project would result in substantial new development that is markedly different from existing uses, development, and activities within the neighborhood. Such a project may lead to indirect displacement. Typically, projects that are small to moderate in size would not have significant socioeconomic effects unless they are likely to generate socioeconomic conditions that are very different from existing conditions in the area. Residential development of 200 units or less or commercial development of 200,000 square feet or less would typically not result in significant socioeconomic impacts. For projects exceeding these thresholds, assessments of indirect residential displacement and indirect business displacement are appropriate.
- The project would add to, or create, a retail concentration that may draw a substantial amount of sales from existing businesses within the study area to the extent that certain categories of business close and vacancies in the area increase, thus resulting in a potential for disinvestment on local retail streets. Projects resulting in less than 200,000 square feet of retail on a single development site would not typically result in socioeconomic impacts. If the proposed development is located on multiple sites located across an Affected Area, a preliminary analysis is likely only warranted for retail developments in excess of 200,000 sq. ft. that are considered regional-serving (not the type of retail that primarily serves the local population). For projects exceeding these thresholds, an assessment of the indirect business displacement due to market saturation is appropriate.
- If the project is expected to affect conditions within a specific industry, an assessment is appropriate. For example, a citywide regulatory change that would adversely affect the economic and operational conditions of certain types of businesses or processes may affect socioeconomic conditions in a neighborhood: (1) if a substantial number of residents or workers depend on the goods or services

provided by the affected businesses; or (2) if it would result in the loss or substantial diminishment of a particularly important product or service within the city. Since the range of possible types of projects that may require an analysis of specific industries varies, the lead agency, in consultation with the Mayor's Office of Environmental Coordination (MOEC), should provide guidance as to whether an analysis is warranted.

Methodology

Typically, the socioeconomic study area boundaries are similar to those of the land use study area. The study area encompasses the project site and adjacent area within 400 feet, 0.25 mile, or 0.5 mile, depending on project size and area characteristics. The socioeconomic assessment seeks to examine the potential to change socioeconomic character relative to the study area population. For projects that result in an increase in residential population, the scale of the relative change is typically represented as a percent increase in population.

Proposed Project Overview

Existing Conditions

The Affected Area is located on Block 318, Lots 1, 9, 11, 15, and 22. In total, the Affected Area is approximately 107,400 SF within an R5 zoning district. The Projected Development Sites are approximately 98,845 SF, with a combined 94,675 GSF of existing manufacturing uses.

Future No-Action Condition

In the future without the Proposed Actions, existing conditions would remain. Under the Affected Area's existing R5 zoning, development of residential uses would be permitted at 1.25 FAR and community facility uses would be permitted at 2.00 FAR. No commercial or manufacturing uses would be permitted in the existing R5 zoning district. The manufacturing and utility lots (Block 318, Lots 1, 11, 15, and 22) would continue to be illegal, non-conforming uses within the existing R5 zoning district, and the zoning district's limited permitted land uses (residential and community facility) and low FAR (1.25 for residential and 2.00 for community facility) make redevelopment unlikely.

Future With-Action Condition

In the future with the Proposed Actions, the Affected Area would be rezoned to M1-5/R6A (MX). The Applicant-owned Block 318, Lots 15 and 22, identified as Projected Development Site 1, would assemble and develop to the maximum permitted bulk and height within the new zoning district. As a result of the proposed rezoning, the development of Block 318, Lot 1, identified as Projected Development Site 2, is also likely to be induced, which would max out permitted bulk and height.

Preliminary Socioeconomic Assessment

Direct Residential Displacement

There are no residential dwelling units within the Affected Area under existing conditions. The Proposed Actions would not lead to the displacement of residents. Therefore, an assessment of direct residential displacement is not warranted.

Direct Business Displacement

The Proposed Actions would directly displace approximately 24 existing workers within the Affected Area, well under the threshold of 100 workers that necessitates an assessment of direct displacement. The Proposed Actions would also not displace a business that is unusually important because its products or services are uniquely dependent on its location. An assessment of direct business displacement is therefore not required.

Indirect Residential Displacement

The Proposed Actions would result in a net induced development of 392 dwelling units, 78 of which would be affordable. Pursuant to the *CEQR Technical Manual*, for projects exceeding 200 dwelling units, assessments of indirect residential displacement are appropriate. Therefore, further analysis of the potential for indirect displacement due to increased rents is warranted.

Indirect Business Displacement due to Retail Market Saturation

The Proposed Actions are projected to result in the net incremental development of 10,000 GSF of community facility use and 126,239 GSF of commercial use. Pursuant to the *CEQR Technical Manual*, for projects exceeding 200,000 square feet of retail spaces, assessments of indirect business displacement due to market saturation are appropriate. The commercial spaces of the proposed development would be far below the threshold, and therefore further analysis of indirect business displacement is not warranted.

Adverse Effects on Specific Industries

The Proposed Actions would not affect a business that provides goods or services to a substantial number of residents or workers, and would not result in the loss or substantial diminishment of a particularly important product or service within the city. Therefore, no adverse impacts to any industries would occur as a result of the Proposed Actions.

Indirect Residential Displacement Analysis

Total Population Change

1/4-Mile Study Area

Because the Proposed Actions would result in the induced development of over 200 residential units, further analysis of the potential for indirect impacts associated with increased rents was conducted, relying on the methodology of the *CEQR Technical Manual*. Pursuant to *Chapter 5, Section 310 of the CEQR Technical Manual*, an initial study area of 1/4-mile radius is identified as appropriate. To estimate the existing population within the study area, reference was made to the 2015-2019 American Community Survey. The Study Area was defined to include those census tracts that are more than 50 percent within a 1/4-mile radius of the Affected Area (**Figure 2.5-1**). The census tracts with more than 50 percent of their land area within a ¼-mile radius of the Affected Area are census tracts 39, 43, 45, and 77.

Figure 2.5-1: Socioeconomic Study Area – 1/4 Mile

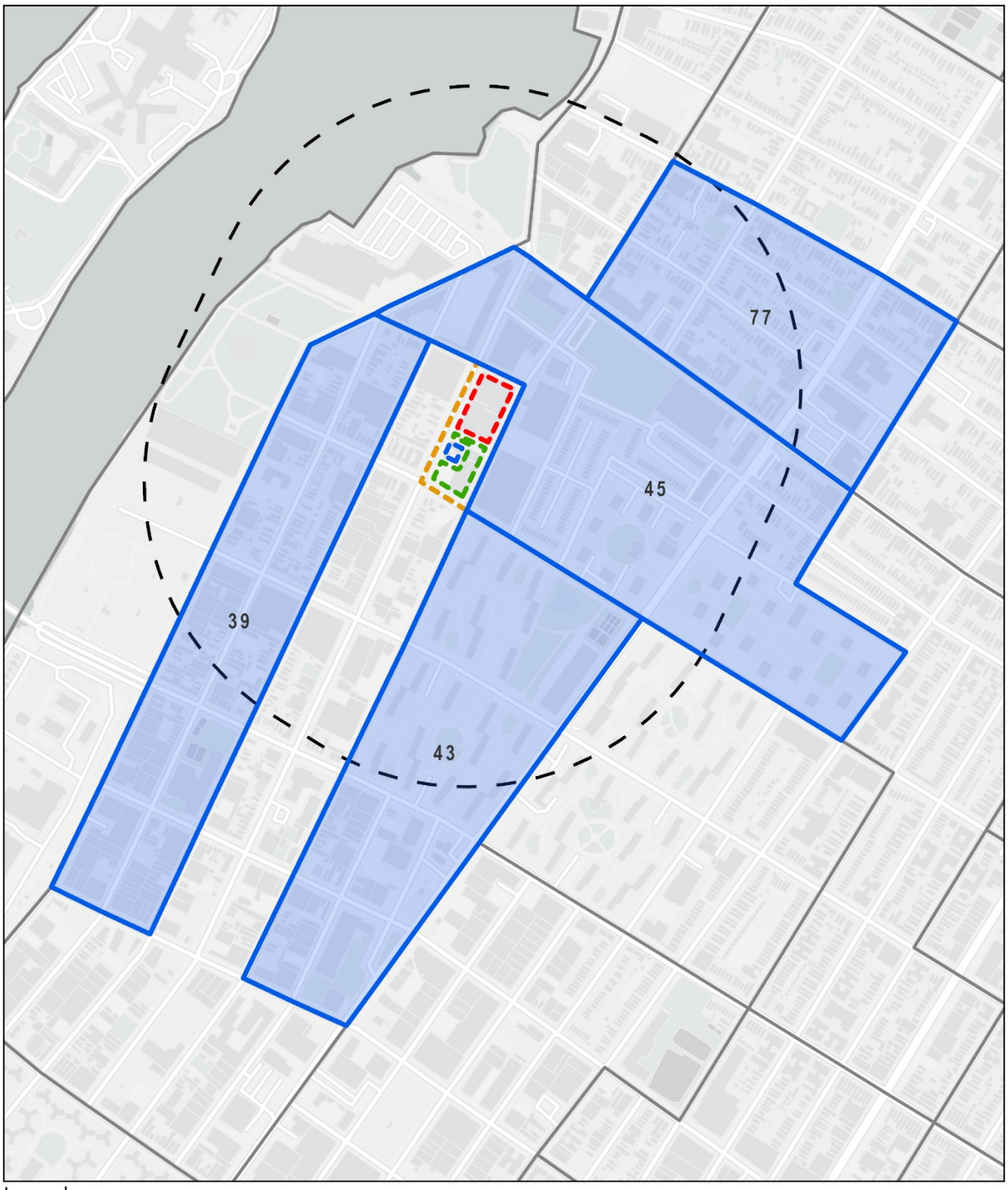

Table 2.5-1: Completed DOB Permits Within 1/4-mile Study Area Since 2010

ID	Census Tract	Address	Job Type	Permit Year	Complete Year	Class A Initial Units	Class A Proposed Units	Class A Net Units	Initial Hotel Units	Proposed Hotel Units	Ownership
1	39	33-46 10 St	Demolition	2010	2010	2	0	-2			Private For-Profit: Corporation
2	39	09-02 34 Ave	Alteration	2013	2016	4	4	0			Private For-Profit: Individual
3	39	35-30 9 St	Alteration	2008	2017	0	2	2			Private For-Profit: Individual
4	43	12-04 37 Ave	Demolition	2012	2012	1	0	-1			Private For-Profit: Partnership
5	43	37-15 12 St	Demolition	2016	2016	1	0	-1			Private For-Profit: Partnership
6	43	37-33 12 St	Demolition	2014	2014	2	0	-2			Private For-Profit: Individual
7	43	36-11 12 St	Demolition	2011	2011	2	0	-2			Private Non-Profit: Corporation
8	43	12-08 37 Ave	Demolition	2013	2013	1	0	-1			Private For-Profit: Partnership
9	43	12-02 37 Ave	New Building	2016	2018	0	0	0	0	164	Private For-Profit: Partnership
10	43	37-13 12 St	Demolition	2016	2016	1	0	-1			Private For-Profit: Partnership
11	43	37-17 12 St	Demolition	2016	2016	1	0	-1			Private For-Profit: Partnership
12	43	36-11 12 St	New Building	2012	2013	0	18	18			Private Non-Profit: Corporation
13	45	21-20 33 Ave	Alteration	2006	2010	2	3	1			Private For-Profit: Individual
14	45	21-25 34 Ave	Alteration	2012	2013	54	55	1			Private For-Profit: Corporation
15	45	21-34 Broadway	Alteration	2015	2020	2	37	35			Private For-Profit: Partnership
16	45	32-12 23 St	New Building	2003	2013	0	3	3			Private For-Profit: Individual
17	45	21-20 Broadway	Alteration	2011	2013	2	2	0			Private For-Profit: Individual
18	77	14-01 Broadway	Demolition	2015	2015	1	0	-1			Private For-Profit: Partnership
19	77	14-11 31 Rd	Demolition	2013	2013	1	0	-1			Private For-Profit: Individual

20	77	31-05 21 St	Demolition	2018	2018	1	0	-1			Private For-Profit: Individual
21	77	31-10 23 St	Alteration	2014	2016	35	35	0			Private For-Profit: Condo/Co-Op
22	77	14-07 Broadway	New Building	2015	2018	0	82	82			Private For-Profit: Partnership
23	77	14-42 31 Dr	Alteration	2015	2016	2	4	2			Private For-Profit: Partnership
24	77	12-20 31 Dr	New Building	2011	2012	0	6	6			Private Non-Profit: Individual
25	77	31-01 21 St	Alteration	2015	2018	0	6	6			Private For-Profit: Individual
26	77	14-23 Broadway	New Building	2011	2018	0	15	15			Private For-Profit: Corporation
27	77	14-14 31 Ave	Alteration	2015	2017	2	3	1			Private For-Profit: Individual
28	77	21-16 31 Ave	New Building	2008	2011	0	32	32			Government, City: DCAS
29	77	14-19 Broadway	Demolition	2014	2014	1	0	-1			Private For-Profit: Partnership
30	77	21-10 31 Ave	Demolition	2018	2018	1	0	-1			Private For-Profit: Condo/Co-Op
31	77	31-53 14 St	Alteration	2005	2015	2	2	0			Private For-Profit: Individual
32	77	14-18 31 Ave	New Building	2015	2016	0	5	5			Private For-Profit: Individual
33	77	12-20 31 Dr	Demolition	2010	2010	1	0	-1			Private For-Profit: Individual
34	77	12-15 Broadway	New Building	2008	2014	0	214	214			Private For-Profit: Partnership
35	77	14-34 31 Ave	New Building	2010	2016	0	14	14			Private For-Profit: Corporation
36	77	14-24 31 Rd	Alteration	2003	2020	0	3	0			Private For-Profit: Individual
37	77	14-11 31 Rd	New Building	2013	2018	0	2	2			Private For-Profit: Individual
Total						**122**	**547**	**422**	**0**	**164**	

Existing Conditions

As stated in *CEQR Technical Manual*, to better understand the trends of changing socioeconomic conditions of the Study Area that may potentially displace a vulnerable population, it is useful to include data from the most recent census as well as data from the completed DOB permits in the previous decade when determining the existing population of the Study Area. The data adopted to determine the existing population includes 2015-2019 5-year ACS census data and DCP Housing Database Project-Level Files.

Based on 2015-2019 5-year ACS estimates, the total population of the four census tracts within the 1/4-mile Study Area is 8,772 residents. According to the Project-Level DCP Housing Database, 37 permits were completed within the four census tracts in the 1/4-Mile Study Area since January 1, 2010. As shown in **Table 2.5-1** above, an increment of 422 Class A dwelling units and 164 hotel units were introduced into the 1/4-Mile Study Area as a result of the completed DOB permits. The 422 dwelling units multiplied by the average household size (2.10) for Queens Community District 1 (2015-2019 ACS) comes out to 885 additional residents. In total, there would be 9,657 existing residents in the 1/4-Mile Study Area.

Future No-Action Condition

The No-Action Condition for the Study Area, projecting to the 2024 build year, is based on the household size and known developments within the Study Area. A review of active major construction projects, approved BSA applications, and approved ULURP actions was undertaken to determine known developments in the area. A total of 35 proposed projects, resulting in 1,500 proposed dwelling units, were identified. The proposed 1,500 dwelling units multiplied by the average household size (2.10) for Queens Community District 1 (2015-2019 ACS) comes out to 3,147 additional residents. The No-Action population for the Study Area would be the 3,147 additional residents plus the existing Study Area population of 9,657, for a total No-Action population of 12,804 residents.

Future With-Action Condition

Compared to No-Action Conditions, the Proposed Actions would introduce 392 dwelling units, 78 of which would be affordable. Assuming an average household size of 2.10 persons, there would be 822 incremental residents resulting from the Proposed Actions.

In determining whether a detailed analysis of potential indirect residential displacement is warranted, *CEQR Technical Manual Chapter 5, Section 322.1*, Step 2, stated in part, 'if the population increase is greater than 5 percent in the study area as a whole or within any identified subareas, move on to Step 3.' The incremental population increase effectuated by the Proposed Actions would be 6.42 percent (822 additional residents divided by 12,804 No-Action population).

1/2-Mile Study Area

Because the population increase is greater than 5 percent, the study area will need to be expanded to ½-mile. As shown in **Figure 2.5-2**, the study area is expanded to a 1/2-mile study area as the analysis reveals

that the increase in population would exceed 5 percent in the 1/4-mile study area. The census tracts that have greater than 50 percent of their land area within the ½-mile study area are census tracts 37, 39, 43, 45, 47, 53, 75, 77, 79, 81, and 85 in Queens and census tract 238.02 in Manhattan.

Figure 2.5-2: Socioeconomic Study Area – 1/2 Mile

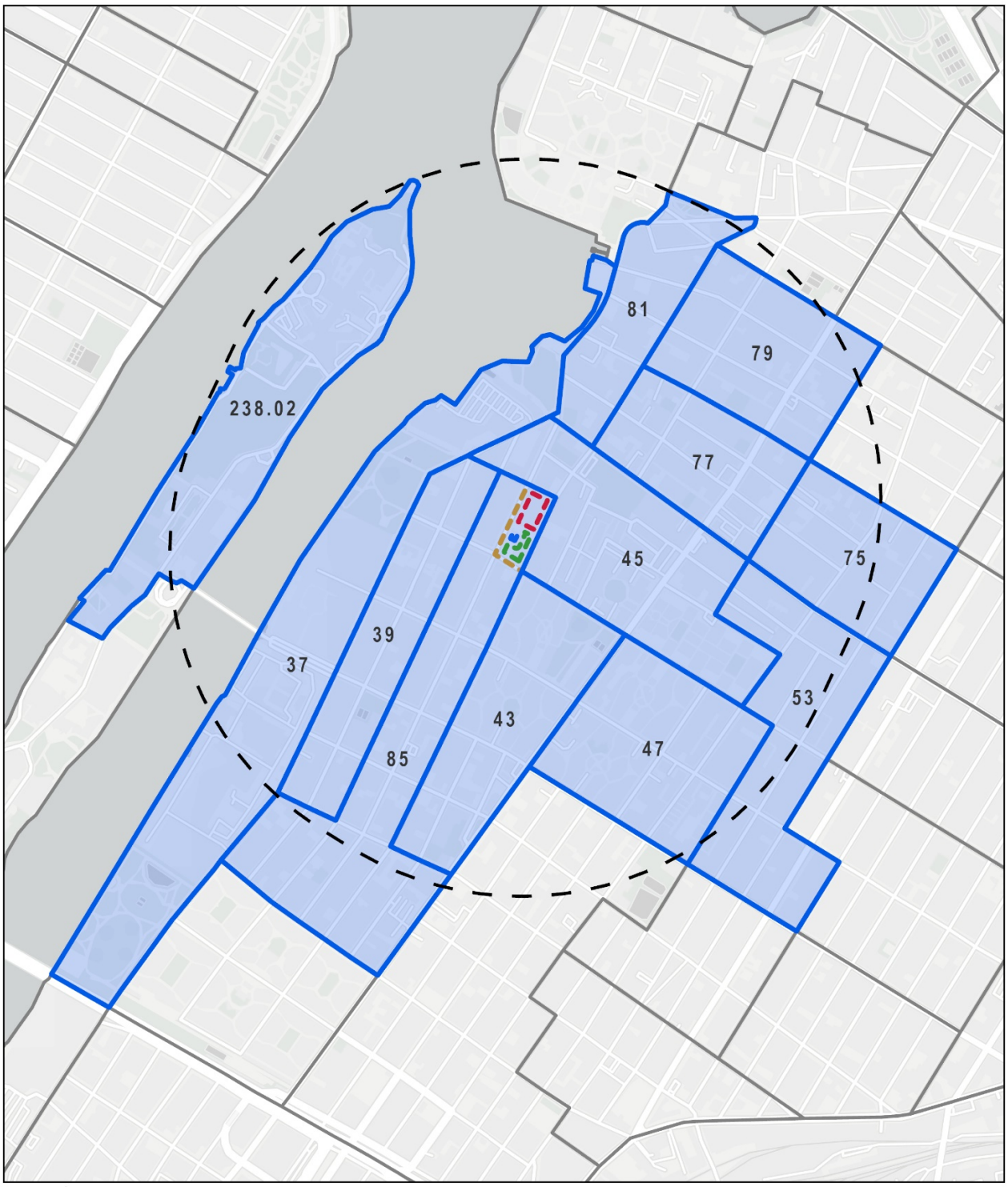

Table 2.5-2: Completed DOB Permits Within 1/2-mile Study Area Since 2010

ID	Census Tract	Address	Job Type	Permit Year	Complete Year	Class A Initial Units	Class A Proposed Units	Class A Net Units	Initial Hotel Units	Proposed Hotel Units	Ownership
1	238.02	888 Main St	Alteration	2018	2018	501	501	0			Government, City: Corporation
2	39	33-46 10 St	Demolition	2010	2010	2	0	-2			Private For-Profit: Corporation
3	39	09-02 34 Av	Alteration	2013	2016	4	4	0			Private For-Profit: Individual
4	39	35-30 9 St	Alteration	2008	2017	0	2	2			Private For-Profit: Individual
5	43	12-04 37 Av	Demolition	2012	2012	1	0	-1			Private For-Profit: Partnership
6	43	37-15 12 St	Demolition	2016	2016	1	0	-1			Private For-Profit: Partnership
7	43	37-33 12 St	Demolition	2014	2014	2	0	-2			Private For-Profit: Individual
8	43	36-11 12 St	Demolition	2011	2011	2	0	-2			Private Non-Profit: Corporation
9	43	12-08 37 Av	Demolition	2013	2013	1	0	-1			Private For-Profit: Partnership
10	43	12-02 37 Av	New Building	2016	2018	0	0	0	0	164	Private For-Profit: Partnership
11	43	37-13 12 St	Demolition	2016	2016	1	0	-1			Private For-Profit: Partnership
12	43	37-17 12 St	Demolition	2016	2016	1	0	-1			Private For-Profit: Partnership
13	43	36-11 12 St	New Building	2012	2013	0	18	18	0	0	Private Non-Profit: Corporation
14	45	21-20 33 Av	Alteration	2006	2010	2	3	1			Private For-Profit: Individual
15	45	21-25 34 Av	Alteration	2012	2013	54	55	1			Private For-Profit: Corporation
16	45	21-34 Broadway	Alteration	2015	2020	2	37	35			Private For-Profit: Partnership
17	45	32-12 23 St	New Building	2003	2013	0	3	3			Private For-Profit: Individual
18	45	21-20 Broadway	Alteration	2011	2013	2	2	0			Private For-Profit: Individual
19	47	34-26 Crescent St	Alteration	2004	2010	3	3	0			Private For-Profit: Individual

20	47	25-19 36 Av	Alteration	2014	2017	2	1	-1	Private For-Profit: Individual
21	47	35-22 Crescent St	Alteration	2011	2013	2	3	1	Private For-Profit: Individual
22	47	34-23 Crescent St	Alteration	2015	2017	1	1	0	Private For-Profit: Individual
23	47	25-10 35 Av	Alteration	2011	2016	1	2	1	Private For-Profit: Individual
24	47	34-43 24 St	Alteration	2007	2011	2	3	1	Private For-Profit: Individual
25	47	34-20 Crescent St	Alteration	2005	2010	2	3	1	Private For-Profit: Individual
26	47	25-11 35 Av	Alteration	2003	2011	2	3	1	Private For-Profit: Individual
27	47	34-50 Crescent St	Alteration	2009	2010	2	2	0	Private For-Profit: Individual
28	47	34-27 Crescent St	Alteration	2011	2013	2	2	0	Private For-Profit: Individual
29	53	25-24 Broadway	Alteration	2015	2016	3	7	4	Private For-Profit: Individual
30	53	23-18 Broadway	New Building	2005	2010	0	6	6	Private For-Profit: Corporation
31	53	35-14 32 St	Alteration	2013	2013	5	3	-2	Private For-Profit: Individual
32	53	35-50 32 St	Alteration	2011	2012	4	3	-1	Private For-Profit: Individual
33	53	25-26 Broadway	Demolition	2015	2015	3	0	-3	Private For-Profit: Corporation
34	53	33-59 28 St	Alteration	2017	2018	2	1	-1	Private For-Profit: Individual
35	53	35-52 32 St	New Building	2013	2015	0	2	2	Private For-Profit: Corporation
36	53	25-17 33 Av	Alteration	2018	2019	2	1	-1	Private For-Profit: Individual
37	53	34-38 30 St	Demolition	2019	2019	2	0	-2	Private For-Profit: Corporation
38	53	23-13 33 Av	Alteration	2008	2010	1	1	0	Private For-Profit: Individual
39	53	35-44 30 St	New Building	2006	2011	0	62	62	Private For-Profit: Individual
40	53	23-02 33 Av	Alteration	2013	2015	1	2	1	Private For-Profit: Individual
41	53	23-20A Broadway	New Building	2005	2010	0	5	5	Private For-Profit: Corporation

42	53	23-20 Broadway	New Building	2005	2010	0	6	6			Private For-Profit: Corporation
43	53	32-20 30 St	Alteration	2001	2010	2	2	0			Private For-Profit: Individual
44	53	35-36 32 St	Demolition	2019	2019	2	0	-2			Private For-Profit: Individual
45	53	29-10 Broadway	Alteration	2015	2018	0	64	64			Private For-Profit: Partnership
46	53	23-24 Broadway	New Building	2015	2017	0	10	10			Private For-Profit: Individual
47	53	34-53 28 St	Alteration	2012	2012	1	1	0			Private For-Profit: Individual
48	53	34-37 28 St	Alteration	2013	2013	1	1	0			Private For-Profit: Individual
49	53	34-27 28 St	Alteration	2014	2016	2	1	-1			Private For-Profit: Individual
50	53	28-01 33 Av	Alteration	2012	2013	2	3	1			Private For-Profit: Individual
51	53	33-27 28 St	Alteration	2009	2010	1	2	1			Private Non-Profit: Individual
52	53	23-22 Broadway	New Building	2005	2010	0	5	5			Private For-Profit: Corporation
53	53	25-28 Broadway	Demolition	2017	2017	2	0	-2			Private For-Profit: Individual
54	53	34-41 29 St	Alteration	2011	2012	2	3	1			Private For-Profit: Individual
55	53	33-42 28 St	Alteration	2003	2011	3	4	1			Private For-Profit: Individual
56	53	23-30 Broadway	New Building	2002	2013	0	18	18			Private For-Profit: Individual
57	53	34-51 28 St	Alteration	2011	2012	1	1	0			Private For-Profit: Individual
58	53	34-02 29 St	Alteration	2016	2017	2	2	0			Private For-Profit: Individual
59	53	33-56 29 St	Alteration	2013	2014	2	1	-1	0	0	Private For-Profit: Individual
60	53	35-52 32 St	Demolition	2013	2013	2	0	-2			Private For-Profit: Corporation
61	53	23-19 33 Rd	Alteration	2014	2015	1	2	1			Private For-Profit: Individual
62	53	23-24 Broadway	Demolition	2015	2015	2	0	-2			Private For-Profit: Individual
63	75	23-43 31 Rd	Demolition	2017	2017	2	0	-2			Private For-Profit: Corporation

64	75	23-36 31 Dr	Demolition	2014	2014	1	0	-1			Government, City: NYCHA
65	75	23-60 31 Av	Demolition	2016	2016	1	0	-1			Private For-Profit: Partnership
66	75	23-23 Broadway	Alteration	2017	2018	2	2	0			Private For-Profit: Individual
67	75	23-39 31 Dr	Demolition	2010	2010	2	0	-2			Private For-Profit: Corporation
68	75	31-13 23 St	Demolition	2014	2014	2	0	-2			Private For-Profit: Individual
69	75	23-47 31 Rd	Demolition	2017	2017	2	0	-2			Private For-Profit: Corporation
70	75	23-37 31 Rd	New Building	2013	2015	0	13	13			Private For-Profit: Individual
71	75	23-17 Broadway	New Building	2008	2011	0	10	10			Private For-Profit: Individual
72	75	23-51 31 Rd	Alteration	2003	2017	7	8	1			Private For-Profit: Individual
73	75	23-39 31 Dr	New Building	2012	2013	0	6	6			Private For-Profit: Corporation
74	75	23-41 31 Rd	Demolition	2017	2017	2	0	-2			Private For-Profit: Corporation
75	75	23-33 31 Rd	New Building	2015	2017	0	16	16			Private For-Profit: Partnership
76	75	23-34 31 Dr	Demolition	2014	2014	1	0	-1			Government, City: NYCHA
77	75	23-27 Broadway	Alteration	2002	2014	1	2	1	0	0	Private For-Profit: Individual
78	75	23-06 31 Av	New Building	2014	2015	0	10	10			Private For-Profit: Individual
79	75	23-16 31 Av	Demolition	2014	2014	2	0	-2			Private For-Profit: Corporation
80	75	23-53 31 Rd	Alteration	2015	2017	6	6	0			Private For-Profit: Individual
81	75	31-22 29 St	Demolition	2019	2019	2	0	-2			Private For-Profit: Corporation
82	75	23-37 31 Rd	Demolition	2012	2012	2	0	-2			Private For-Profit: Corporation
83	75	23-36 31 Dr	New Building	2014	2016	0	22	22			Private For-Profit: Corporation
84	75	31-73 Crescent St	Alteration	2012	2013	1	2	1			Private For-Profit: Individual
85	75	23-31 31 Rd	Demolition	2015	2015	2	0	-2			Private For-Profit: Individual

86	75	31-13 23 St	New Building	2014	2015	0	8	8	Private For-Profit: Partnership
87	75	23-32 31 Dr	New Building	2008	2011	0	10	10	Private Non-Profit: Individual
88	75	31-41 29 St	Demolition	2017	2017	1	0	-1	Private For-Profit: Corporation
89	75	29-19 Broadway	Demolition	2011	2011	4	0	-4	Private For-Profit: Partnership
90	75	23-06 31 Av	Demolition	2014	2014	1	0	-1	Private For-Profit: Partnership
91	75	23-12 31 Dr	New Building	2008	2014	0	8	8	Private For-Profit: Individual
92	75	31-84 30 St	New Building	2012	2013	0	4	4	Private For-Profit: Individual
93	75	23-37 31 Dr	New Building	2012	2013	0	5	5	Private For-Profit: Corporation
94	77	14-01 Broadway	Demolition	2015	2015	1	0	-1	Private For-Profit: Partnership
95	77	14-11 31 Rd	Demolition	2013	2013	1	0	-1	Private For-Profit: Individual
96	77	31-05 21 St	Demolition	2018	2018	1	0	-1	Private For-Profit: Individual
97	77	31-10 23 St	Alteration	2014	2016	35	35	0	Private For-Profit: Condo/Co-Op
98	77	14-07 Broadway	New Building	2015	2018	0	82	82	Private For-Profit: Partnership
99	77	14-42 31 Dr	Alteration	2015	2016	2	4	2	Private For-Profit: Partnership
100	77	12-20 31 Dr	New Building	2011	2012	0	6	6	Private Non-Profit: Individual
101	77	31-01 21 St	Alteration	2015	2018	0	6	6	Private For-Profit: Individual
102	77	14-23 Broadway	New Building	2011	2018	0	15	15	Private For-Profit: Corporation
103	77	14-14 31 Av	Alteration	2015	2017	2	3	1	Private For-Profit: Individual
104	77	21-16 31 Av	New Building	2008	2011	0	32	32	Government, City: DCAS
105	77	14-19 Broadway	Demolition	2014	2014	1	0	-1	Private For-Profit: Partnership
106	77	21-10 31 Av	Demolition	2018	2018	1	0	-1	Private For-Profit: Condo/Co-Op
107	77	31-53 14 St	Alteration	2005	2015	2	2	0	Private For-Profit: Individual

108	77	14-18 31 Av	New Building	2015	2016	0	5	5	Private For-Profit: Individual
109	77	12-20 31 Dr	Demolition	2010	2010	1	0	-1	Private For-Profit: Individual
110	77	12-15 Broadway	New Building	2008	2014	0	214	214	Private For-Profit: Partnership
111	77	14-34 31 Av	New Building	2010	2016	0	14	14	Private For-Profit: Corporation
112	77	14-24 31 Rd	Alteration	2003	2020	0	3	0	Private For-Profit: Individual
113	77	14-11 31 Rd	New Building	2013	2018	0	2	2	Private For-Profit: Individual
114	79	14-43 31 Av	Demolition	2018	2018	1	0	-1	Private For-Profit: Corporation
115	79	21-21 31 Av	Demolition	2016	2016	2	0	-2	Private For-Profit: Partnership
116	79	30-90 21 St	Demolition	2015	2015	1	0	-1	Private For-Profit: Partnership
117	79	12-14 30 Rd	New Building	2016	2019	0	3	3	Private For-Profit: Individual
118	79	12-08 30 Dr	New Building	2015	2017	0	6	6	Private For-Profit: Corporation
119	79	30-25 21 St	Demolition	2013	2013	2	0	-2	Private For-Profit: Corporation
120	79	21-11 31 Av	Demolition	2017	2017	2	0	-2	Private For-Profit: Partnership
121	79	21-17 31 Av	New Building	2015	2018	0	56	56	Private For-Profit: Partnership
122	79	30-50 21 St	New Building	2010	2012	0	65	65	Private For-Profit: Partnership
123	79	14-53 31 Av	Demolition	2015	2015	1	0	-1	Private For-Profit: Individual
124	79	21-03 31 Av	Demolition	2013	2013	1	0	-1	Private For-Profit: Individual
125	79	14-33 31 Av	New Building	2015	2019	0	64	64	Private For-Profit: Corporation
126	79	30-88 21 St	Demolition	2019	2019	2	0	-2	Private For-Profit: Individual
127	79	21-09 31 Av	Demolition	2017	2017	2	0	-2	Private For-Profit: Partnership
128	79	30-92 14 St	Alteration	2004	2013	2	5	3	Private For-Profit: Individual
129	79	14-57 31 Av	Demolition	2014	2014	2	0	-2	Private For-Profit: Individual

130	79	14-41 31 Av	Demolition	2018	2018	1	0	-1	Private For-Profit: Corporation
131	79	14-29 30 Rd	Alteration	2017	2019	2	2	0	Private For-Profit: Individual
132	79	30-40 21 St	New Building	2014	2016	0	62	62	Private For-Profit: Corporation
133	79	21-18 30 Dr	Alteration	2011	2014	1	2	1	Private For-Profit: Individual
134	79	21-27 30 Dr	Demolition	2019	2019	2	0	-2	Private For-Profit: Individual
135	79	21-21A 30 Rd	Alteration	2015	2016	2	3	1	Private For-Profit: Other
136	79	30-90 21 St	Demolition	2015	2015	1	0	-1	Private For-Profit: Partnership
137	79	30-12 21 St	Demolition	2016	2016	3	0	-3	Private For-Profit: Individual
138	79	14-56 30 Av	Alteration	2018	2019	2	2	0	Private For-Profit: Individual
139	79	30-25 21 St	New Building	2013	2015	0	22	22	Private For-Profit: Corporation
140	79	14-47 31 Av	Demolition	2015	2015	2	0	-2	Private For-Profit: Corporation
141	79	21-03 31 Av	New Building	2015	2017	0	21	21	Private For-Profit: Corporation
142	79	21-15 31 Av	Demolition	2016	2016	3	0	-3	Private For-Profit: Partnership
143	79	21-13 31 Av	Demolition	2016	2016	5	0	-5	Private For-Profit: Partnership
144	79	30-09 21 St	Demolition	2018	2018	2	0	-2	Private For-Profit: Partnership
145	79	30-18 14 St	Demolition	2017	2017	2	0	-2	Private For-Profit: Individual
146	79	30-88 21 St	Demolition	2019	2019	1	0	-1	Private For-Profit: Individual
147	79	14-45 31 Av	New Building	2017	2019	0	18	18	Private For-Profit: Partnership
148	79	30-27 21 St	Demolition	2013	2013	2	0	-2	Private For-Profit: Corporation
149	79	30-26 14 St	Demolition	2017	2017	2	0	-2	Private For-Profit: Individual
150	79	14-11 31 Av	Demolition	2017	2017	3	0	-3	Private For-Profit: Partnership
151	79	21-19 31 Av	Demolition	2016	2016	2	0	-2	Private For-Profit: Partnership

152	79	12-06 30 Rd	Alteration	2012	2017	3	5	2			Private For-Profit: Individual
153	79	30-11 21 St	New Building	2007	2011	0	33	33			Private For-Profit: Partnership
154	81	12-28 Main Av	Demolition	2018	2018	1	0	-1			Private For-Profit: Individual
155	81	11-32 30 Rd	Alteration	2008	2010	3	5	2			Private For-Profit: Individual
156	81	11-24 31 Av	New Building	2006	2010	0	75	75			Private For-Profit: Partnership
157	81	11-42 31 Av	New Building	2007	2010	0	7	7			Private For-Profit: Partnership
158	81	11-15 Broadway	New Building	2010	2013	0	79	79			Private For-Profit: Partnership
159	81	11-01 Welling Ct	Demolition	2017	2017	1	0	-1			Private For-Profit: Corporation
160	81	31-01 Vernon Blvd	Alteration	2007	2010	70	70	0			Private For-Profit: Corporation
161	81	11-03 Welling Ct	Demolition	2017	2017	1	0	-1			Private For-Profit: Individual
162	81	11-07 Welling Ct	New Building	2015	2017	0	28	28			Private For-Profit: Corporation
163	81	11-40 31 Av	Demolition	2019	2019	1	0	-1			Private For-Profit: Partnership
164	81	11-28 31 Dr	Alteration	2017	2019	0	9	9			Private For-Profit: Corporation
165	81	11-55 Welling Ct	Alteration	2006	2010	2	3	1			Private For-Profit: Individual
166	81	09-24 MAIN Av	Demolition	2017	2017	1	0	-1			Private For-Profit: Individual
167	81	11-02 30 Dr	Demolition	2016	2016	1	0	-1			Private For-Profit: Partnership
168	81	11-07 Welling Ct	Demolition	2013	2013	4	0	-4			Private For-Profit: Corporation
169	81	11-08 31 Dr	New Building	2015	2018	0	103	103			Private For-Profit: Partnership
170	81	11-05 30 Rd	New Building	2008	2015	0	79	79			Private For-Profit: Corporation
171	81	11-48 Welling Ct	Alteration	2014	2015	1	2	1			Private For-Profit: Individual
172	85	38-76 12 St	Demolition	2011	2011	2	0	-2			Private For-Profit: Corporation
173	85	38-58 12 St	New Building	2015	2018	0	0	0	0	50	Private For-Profit: Partnership

174	85	38-61 12 St	New Building	2011	2014	0	0	0	0	152	Private For-Profit: Corporation
175	85	37-10 11 St	Demolition	2015	2015	2	0	-2			Private For-Profit: Partnership
176	85	38-57 12 St	Demolition	2011	2011	2	0	-2			Private For-Profit: Partnership
177	85	11-03 36 Av	Alteration	2016	2017	1	2	1			Private For-Profit: Individual
178	85	09-02 38 Av	New Building	2015	2019	0	0	0	0	111	Private For-Profit: Partnership
179	85	38-15 9 St	Demolition	2018	2018	2	0	-2			Private For-Profit: Individual
180	85	38-17 9 St	Demolition	2018	2018	2	0	-2			Private For-Profit: Individual
181	85	38-60 13 St	New Building	2015	2017	0	0	0	0	72	Private For-Profit: Partnership
182	85	38-23 9 St	Demolition	2019	2019	1	0	-1			Private For-Profit: Partnership
183	85	38-66 10 St	Demolition	2010	2010	1	0	-1			Private For-Profit: Partnership
184	85	38-58 12 St	Demolition	2014	2014	1	0	-1			Private For-Profit: Partnership
185	85	38-21 9 St	Demolition	2018	2018	2	0	-2			Private For-Profit: Individual
186	85	34-38 12 St	Alteration	2003	2013	1	2	1			Private For-Profit: Individual
187	85	38-19 9 St	Demolition	2018	2018	2	0	-2			Private For-Profit: Individual
188	85	37-10 11 St	New Building	2015	2018	0	0	0	0	56	Private For-Profit: Corporation
189	85	38-58 12 St	Demolition	2014	2014	1	0	-1			Private For-Profit: Partnership
190	85	34-31 11 St	Alteration	2017	2019	2	2	0			Private For-Profit: Individual
191	85	38-42 11 St	New Building	2016	2019	0	0	0	0	133	Private For-Profit: Partnership
192	85	38-43 12 St	Demolition	2010	2010	3	0	-3			Private For-Profit: Individual
193	85	11-04 34 Av	New Building	2007	2011	0	3	3			Private For-Profit: Individual
194	85	38-70 12 St	New Building	2016	2019	0	0	0	0	144	Private For-Profit: Corporation
195	85	38-53 12 St	Alteration	2011	2012	2	2	0			Private For-Profit: Corporation

196	85	38-41 12 St	Demolition	2010	2010	2	0	-2			Private For-Profit: Individual
197	85	38-60 11 St	Demolition	2016	2016	2	0	-2			Private For-Profit: Individual
198	85	09-02 38 Av	Demolition	2014	2014	2	0	-2			Private For-Profit: Individual
Total						**915**	**2262**	**1344**	**0**	**882**	

Existing Condition

The population of the 1/2-Mile Study Area, based on 2019 5-year ACS estimates, is 32,411 residents. According to the Project-Level DCP Housing Database, 198 permits were completed within the twelve census tracts in the 1/2-mile Study Area since January 1, 2010. As shown in **Table 2.5-2** above, an increment of 1,344 Class A dwelling units and 882 hotel units were introduced into the 1/2-Mile Study Area as a result of the completed DOB permits. The 1,344 dwelling units multiplied by the average household size (2.10) for Queens Community District 1 (2015-2019 ACS) comes out to 2,820 additional residents. In total, there would be 35,231 existing residents in the 1/2-Mile Study Area.

Future No-Action Condition

The No-Action Condition for the 1/2-Mile Study Area, projecting to the 2024 build year, is based on the household size and known developments within the 1/2-Mile Study Area. A review of active major construction projects, approved BSA applications, and approved ULURP actions was undertaken to determine known developments in the area. A total of approximately 56 proposed projects, resulting in 4,280 proposed dwelling units, were identified. The proposed 4,280 dwelling units multiplied by the average household size (2.01) for Queens Community District 1 (2015-2019 ACS) comes out to 8,980 additional residents. The No-Action population for the 1/2-Mile Study Area would be the 8,980 additional residents plus the existing 1/2-Mile Study Area population of 35,231, for a total No-Action population of 44,210 residents.

Future With-Action Condition

Compared to the No-Action Conditions, the Proposed Actions would introduce 392 dwelling units, 78 of which would be affordable. Assuming an average household size of 2.10 persons, there would be 822 incremental residents resulting from the Proposed Actions.

The incremental population increase effectuated by the Proposed Actions would result in a population increase of 1.86 percent (822 additional residents divided by 44,210 No-Action population) within the 1/2-Mile Study Area. Because the population increase is lower than 5 percent, the change in population would not be expected to affect real estate market conditions within the 1/2-Mile Study Area.

Housing Rent and Household Income

The US Census provides information on median contract rent, which reflects the range of rents for both units of different sizes and ages and occupants who may have moved in recently or lived in their units for a long time. However, these data are of limited use because they fail to distinguish between units subject to market rents and those under some form of rent regulation. To understand the current trends, particularly trends affecting unregulated rental units, the rental data from ACS should be supplemented by information from real estate brokers and examination of current rental apartment listings.

Though utilizing the median gross rent from the ACS data to determine market rents in a study area is not recommended as ACS rents do not distinguish between market and rent regulated units, often making the data difficult to parse, the value of ACS rent data lies in its ability to show trends over time as opposed to the actual values. Therefore, the 2014-2018 ACS and 2015-2019 ACS have been adopted at the same time to show the trend of rent change in the 1/2-Mile Study Area, Queens, and New York City.

Table 2.5-3: 1/2-Mile Study Area, Queens, and NYC ACS Income and Housing Rent Comparison

	Median Household Income	Median Gross Rent	Households below poverty level
2014-2018 5-year ACS			
½ Mile Study Area	61,392	1,576	13.90%
Queens	64,987	1,520	10.50%
New York City	60,762	1,396	15.60%
2015-2019 5-year ACS			
½ Mile Study Area	72,497	1,668	11.41%
Queens	68,666	1,583	9.70%
New York City	63,998	1,443	14.60%

*Data retrieved from 2014-2018 American Community Survey and 2015-2019 American Community Survey

As shown in **Table 2.5-3** above, the 1/2-Mile Study Area has a median household income lower than that in Queens and higher than that in NYC as of 2018, which has increased to be the highest among the 1/2-Mile Study Area, Queens, and the city in 2019. Meanwhile, the 1/2-Mile Study Area has the highest median gross rent compared to that in Queens and New York City in both 2018 and 2019. The median gross rent gap between the 1/2-Mile Study Area and the larger areas has increased over the past year. The percentage of the households below poverty level in the 1/2-Mile Study Area is higher than Queens as a whole, and lower than New York City in both 2018 and 2019. All of the household poverty rates of the three areas is decreasing from 2018 to 2019. The increasing median household income and median gross rent as well as the decreasing household poverty rate indicate that the 1/2-Mile Study Area may have experienced a readily observable trend toward increasing rents.

In addition to the ACS data, a more appropriate data source for determining market rents in the 1/2-Mile Study Area would be from professional market reports of real estate agency websites. Since most real estate reports use neighborhoods as the basic geographic unit, Astoria, where the Affected Area is located, and Long Island City, the closest neighborhood which is witnessing a robust rental market, were used as the alternative and comparable of the 1/2-Mile Study Area in the market rate rental price research. Instead of choosing the data from 2020, market reports in 2019 were reviewed to eliminate the negative impact of the COVID pandemic on the NYC rental market and to compare the rent with the latest 2015-2019 ACS data, which are in the same period.

According to *Douglas Elliman's December 2019 Manhattan, Brooklyn, and Queens Rentals Report*[3], northwest Queens, which is comprised of transactions in the neighborhoods of Long Island City, Astoria, Sunnyside, and Woodside, experienced yearly rises in the median rental price and average rental price by 0.8% and 3.8% respectively. Further supplemented by the sliced data from *StreetEasy Data Dashboard* website[4], the median asking rent in Astoria was $2,200 in Feb 2019, which increased to $2,395 in Feb 2020. Long Island City had the highest median asking rent, which was $3,000 in Feb 2019 and $3,151 in Feb 2020.

The *M.N.S Real Estate NYC 2019 Year End market report*[5], which features a more detailed perspective in the average rental prices of different unit types in both Queens and specific neighborhoods, also proves the trend of steadily increasing rent in the area. The report shows that the average rental prices in Queens increased across all unit types in 2019. Average studio rental prices increased by 2.6% from $1,827 to $1,874, one-bedroom rental prices increased by 3.5% from $2,140 to $2,215, and two-bedroom rental prices increased by 2.4% from $2,701 to $2,766. Overall, the average rental price for a unit in Queens was $2,285, up 2.8% from 2018's overall average of $2,223. The 2019 studio average rental price in Astoria dropped approximately 1% from that of 2018 to $1,896. From 2018 to 2019, the average one-bedroom rental price went up by 3.9% to $2,196, and the average two-bedroom rental price also increased by 4.3% to $2,553. Over 2019, the largest studio price change took place in Long Island City, where the average rental price grew by 5.58%, from $2,504 during 2018 to $2,644 in 2019. In that same period, the largest change within one and two-bedroom pricing also took place in Long Island City. One-bedroom prices increased by 6.19%. from $3,066 during 2018 to $3,255 during 2019. Two-bedroom pricing increased by 5.82%, from $4,055 during 2018 to $4,291 in 2019. Overall, the average rental price for a unit in Long Island City increased by 5.88% from 2018.

Table 2.5-5: 1/2-Mile Study Area, Queens, and NYC GRAPI Comparison

	Less than 15%	15% to 35%	35% or more
2014-2018 5-year ACS			
½ Mile Study Area	12.60%	51.50%	35.90%
Queens	11.30%	42.50%	46.20%
New York City	13.60%	42.20%	44.20%
2015-2019 5-year ACS			
½ Mile Study Area	15.40%	50.30%	34.30%
Queens	11.80%	43.50%	44.70%
New York City	14.30%	42.50%	43.20%

* Data retrieved from 2014-2018 American Community Survey and 2015-2019 American Community Survey

Further investigation was undertaken regarding gross rent as a percentage of household income (GRAPI). The comparisons between the GRAPI values for the 1/2-Mile Study Area and the city/Queens are statistically valid as the margin of error of the difference is no larger than 1/3 of the difference itself. As shown in **Table**

3 https://www.elliman.com/resources/siteresources/commonresources/static%20pages/images/corporate-resources/q4_2019/rental%2012_2019.pdf
4 https://streeteasy.com/blog/data-dashboard/
5 http://www.mns.com/pdf/queens_year_end_market_report_2019.pdf

2.5-5 above, as of 2018, the households that spend 15% to 35% of their household income on gross rent within the 1/2-mile study area constitute 51.5% of the total households paying rent, which has slightly decreased to 50.30% in 2019. The percentages of the households spending 15% to 35% of their total income on gross rent in Queens and New York City are 42.5% and 42.2% in 2018 and 43.5% and 42.5% in 2019. As for the households that spend more than 35% of the total income on gross rent, the percentage of such rent-burdened households in the study area remains the lowest compared to those in Queens and New York City in both 2018 and 2019, with the rent-burdened household percentages going down in all three geographic areas. The household percentage structure of GRAPI in the 1/2-mile study area indicates that the area has a healthier rent market compared to the market in Queens and New York City as 64.1% of households in the area pay less than 35% of the total income on rent in 2018, the percentage of which rose to 65.7% in 2019.

The 78 proposed permanently affordable dwelling units would be affordable for residents with incomes averaging 60% AMI ($61,440 per year for a family of three), which is comparable with the median household income for the Study Area, which averages $61,392 per family. The remaining 314 dwelling units would be expected to rent at the median gross rent of $1,576 in the Study Area. Though it could be expected that the market-rate unit population would have a higher income than average, the expected market rate comparable to the median gross rent within the 1/2-mile study area would not induce a population with an unreasonably high-income level, maintaining the socioeconomic characteristics of, and preventing gentrification within, the area. The Proposed Actions, therefore, are not anticipated to add a new population with much higher average incomes that may significantly affect socioeconomic conditions.

Conclusion

Induced development resulting from the Proposed Actions would continue established trends of population growth in the area, would not add new population with much higher average incomes compared to the average incomes of the existing populations, and would not significantly affect socioeconomic conditions. As indicated above, the Proposed Actions are anticipated to result in a 6.42 percent increase to the 1/4-Mile Study Area population and a 1.86 percent increase to the 1/2-Mile Study Area. Though there may be a readily observable trend toward increasing rents and the proposed development provides market rate dwelling units in the half-mile study area, the household percentage structure of GRAPI in the study area indicates that the area has a healthier rent market compared to the market in Queens and New York City with the highest percentage of households in the area paying less than 35% of their total income on rent. In addition, the proposed development also provides 20% of the total units as permanently affordable units for residents with incomes averaging 60% AMI. Therefore, no significant adverse impact is expected on the socioeconomic conditions in the area and no further analysis is warranted.

Chapter 6: Community Facilities

A community facilities assessment may be necessary if an action could potentially affect the provision of services provided by public or publicly funded community facilities such as schools, hospitals, libraries, daycare/Head Start facilities, and fire and police protection. Per the screening levels established in the *CEQR Technical Manual*, there are direct and indirect effects. An assessment of the project's effects on community facilities is generally warranted if:

- a project would add new population to an area that would increase the demand for services and cause potential indirect effects on service delivery. Depending on the size, income characteristics, and age distribution of the new population there may be effects on public or publicly funded schools, libraries, health care facilities, or daycare/Head Start facilities.

- a project would physically alter a community facility, whether by displacement of the facility or other physical change. This direct effect triggers the need to assess the service delivery of the facility and the potential effect that the change may have on that service delivery.

Preliminary Screening

The incremental development effectuated by the Proposed Actions under the RWCDS would include 392 total units. For the purpose of a conservative community facilities analysis The Applicant's Proposed Developments, which would be 20 percent affordable, will be analyzed. Therefore, 78 of the 392 total units would be affordable.

Based on a preliminary assessment of Queens CEQR thresholds for analysis, as shown in **Table 2.6-1**, this project does trigger a detailed CEQR analysis for public schools, but does not trigger a detailed CEQR analysis for publicly funded daycare/Head Start facilities, libraries, health care facilities, or Police and Fire Protection services. The incremental development scenario results in 59 combined elementary and middle school students and 40 high school students. As shown below in **Table 2.6-1,** the Proposed Actions would result in development above the applicable threshold of 50 combined elementary and middle school students, but below the threshold for publicly funded daycare/head start students and high school students.

Table 2.6-1 Community Facilities-Preliminary Assessment of CEQR Thresholds				
Community Facility	Threshold	392 total DUs 78 low income DUs		Exceeds Criteria Threshold
Public Schools Elementary School and Middle School Students High School Students	>50 elementary and middle school children (combined) >150 high school students	0.11 0.04 0.10	43 16 40	Yes No
Libraries >5% Increase in ratio of residential units	622 DUs in Queens	NA	NA	No
Health Care Facilities >600 low or low-to-moderate income units	NA	NA	NA	No
Publicly Funded Day Care/ Head Start Facilities <6 years old	139 permanently affordable residential DUs in Queens	NA	NA	No
Fire Protection	Direct Effect			No
Police Protection	Direct Effect			No

Source: CEQR App, February 2020 Data Package

Primary and Intermediate Schools – Detailed Assessment

Based on the preliminary analysis, the Proposed Actions are expected to result in a total of 59 additional public-school students (43 primary and 16 intermediate students), which is above the threshold of 50 students.

Study Area

Per the *2020 CEQR Technical Manual*, the study area for the analysis of primary and intermediate schools is to be conducted in the school district's sub-district in which the project is located. The Affected Area is located entirely within the Community School District 30 (CSD 30), Sub-District 3 (**Figure 2.6-1**). CSD 30 Sub-District 3 has 9 primary and 8 intermediate schools for a total of 17 primary and intermediate schools combined.

Figure 2.6-1 shows primary and intermediate schools within CSD 30 Sub-District 3. **Table 2.6-2** and **2.6-3** provide their location, enrollment capacity, and utilization rate.

Figure 2.6-1 School Study Area



Existing Conditions

Primary Schools CSD 30 Sub-District 3

As shown in **Table 2.6-2** (excluding charter schools and special education schools) CSD 30 Sub-District 3 has a capacity of 4,018 seats at the primary level, with an enrollment of 3,325 students and a utilization rate of 83 percent. Primary Schools are currently under capacity by 693 seats.

Intermediate Schools CSD 30 Sub-District 3

As shown in **Table 2.6-3** (excluding charter schools and special education schools) CSD 30 Sub-District 3 has a capacity of 2,596 at the intermediate level, with an enrollment of 2,183 students, and a utilization rate of 84 percent. Intermediate Schools are currently under capacity by 413 seats.

Table 2.6-2: Primary Schools

Org. ID	Bldg. ID	School Name	Address	Org Level	Enrollment	Target Capacity	Available Seats	Utilization
Q017	Q017	P.S. 017 Henry David Thoreau P.S. 17 - QUEENS	28-37 29th STREET	PS	586	480	-106	122%
Q076	Q076	P.S. 076 William Hallet P.S. 76 - QUEENS	36-36 10th STREET	PS	446	695	249	64%
Q078	Q312	P.S./I.S. 78Q P.S./.IS. 78 - QUEENS	46-08 5th STREET	PS	424	440	16	96%
Q078	Q868	P.S./I.S. 78Q P.S. 78 - QUEENS	48-09 CENTER BOULEVARD	PS	177	204	27	87%
Q111	Q111	P.S. 111 Jacob Blackwell P.S. 111 - QUEENS	37-15 13th STREET	PS	257	453	196	57%
Q112	Q112	P.S. 112 Dutch Kills P.S. 112 - QUEENS	25-05 37th AVENUE	PS	450	399	-51	113%
Q171	Q171	P.S. 171 Peter G. Van Alst P.S. 171 - QUEENS	14-14 29th AVENUE	PS	465	718	253	65%
Q234	Q234	P.S. 234 P.S. 234 - QUEENS	30-15 29th STREET	PS	488	552	64	88%
Q384	Q972	P.S. 384 ADULT BASIC EDUCATION - QUEENS	27-35 JACKSON AVENUE	PS	32	77	45	42%
Totals (District 30 - Subdistrict 3)					3,325	4,018	693	83%

Source: CEQR APP February 2020 Data Package

Capacity from transportable class units and mini-schools are excluded from this analysis.

Table 2.6-3: Intermediate Schools

Org. ID	Bldg. ID	School Name	Address	Org Level	Enrollment	Target Capacity	Available Seats	Utilization
Q078	Q312	P.S./I.S. 78Q P.S./.IS. 78 - QUEENS	46-08 5th STREET	IS	97	100	3	97%
Q078	Q868	P.S./I.S. 78Q P.S. 78 - QUEENS	48-09 CENTER BOULEVARD	IS	41	46	5	89%
Q111	Q111	P.S. 111 Jacob Blackwell P.S. 111 - QUEENS	37-15 13th STREET	IS	83	147	64	56%
Q126	Q126	Albert Shanker School for Visual and Performing Arts I.S. 126 - QUEENS	31-51 21st STREET	IS	692	648	-44	107%
Q204	Q204	I.S. 204 Oliver W. Holmes I.S. 204 - QUEENS	36-41 28th STREET	IS	460	814	354	56%
Q235	Q234	Academy for New Americans P.S. 234 - QUEENS	30-14 30th STREET	IS	117	199	82	59%
Q286	Q739	Young Women's Leadership School, Astoria YOUNG WOMEN'S LEADERSHIP ACADEMY- QUEENS	23-15 NEWTOWN AVENUE	IS	266	244	-22	109%
Q291	Q404	Hunters Point Community Middle School HUNTERS POINT CAMPUS - QUEENS	1-50 51st AVENUE	IS	427	398	-29	107%
Totals (District 30 - Subdistrict 3)					*2,183*	*2,596*	*413*	*84%*

Source: CEQR APP February 2020 Data Package

Capacity from transportable class units and mini-schools are excluded from this analysis.

Future No-Action Condition

While no additional residential units would be introduced in the Affected Area under the No-Action Condition, additional housing units are projected in the Study Area, and must be considered in this analysis. Utilizing the latest projections and housing generated pipeline students made available by the School Construction Authority (SCA) for enrollment from 2018 to 2027 (see **Table 2.6-4**), elementary enrollment in CSD 30, Sub-District 3 is expected to increase to 8,908 students by the 2024 school year. Intermediate enrollment in CSD 30, Sub-District 3 is expected to increase to 4,612 students in the 2024 school year.

Table 2.6-4: No-Action 2024 Enrollment

Study Area	Projected 2024 Enrollment	Students Introduced by No Action Residential Development	Total No Action Enrollment	Capacity	Available Seats	Utilization
Primary Schools						
District 30 - Subdistrict 3	7,155	1,753	8,908	4,018	-4,890	222%
Intermediate Schools						
District 30 - Subdistrict 3	4,173	439	4,612	2,596	-2,016	178%

*Housing generated pipeline students.

Future With-Action Condition

Projected Development Site 1

The projected building would contain 229 dwelling units.

Projected Development Site 2

Lot 1 would be occupied by a building containing 163 dwelling units. The With-Action Condition enrollment totals are shown below in **Table 2.6-5**.

Table 2.6-5: With-Action 2024 Enrollment

Study Area	Projected No-Action Enrollment	Project Generated Students	Total With-Action Enrollment	Capacity	Available Seats	Utilization	Change in Utilization (%) from No-Action
Primary Schools							
CSD 30, SD3	8,908	43	8,951	4,018	-4,933	223%	1.07%
Intermediate Schools							
CSD 30, SD3	4,612	16	4,628	2,596	-2,032	178%	0.61%

Conclusion

As stated in Section 6-410 of the *2020 CEQR Technical Manual*, a significant impact may result warranting consideration of potential mitigation if a proposed project would result in both of the following conditions:

- A collective utilization rate of the elementary or intermediate schools that is equal to or greater than 100 percent in the With-Action Condition; and
- An increase of five percent or more in the collective utilization rate between the No-Action and With-Action conditions.

This analysis indicates that in the future With-Action Condition, the utilization rate for elementary schools would be 223 percent and the utilization rate for intermediate schools would be 178 percent. However, the Proposed Actions would result in only a 1.07 percent increase in utilization from the No-Action Condition for Elementary Schools and a 0.61 percent increase for Primary Schools. Therefore, pursuant to *CEQR Technical Manual* methodology, the Proposed Action would not result in significant adverse impacts related to elementary or intermediate school utilization.

Finally, while not included in this analysis, it should be noted that there is one intermediate school under construction in CSD 30, Sub-District 3 located at 44-59 45th Avenue. Although the exact capacity numbers are not yet available, the additional school will help in alleviating the projected growth in enrollment.

Chapter 7: Open Space

Open space is defined as publicly or privately-owned land that is publicly accessible and operates, functions, or is available for leisure, play, or sport, or set aside for the protection and/or enhancement of the natural environment. Pursuant to Chapter 7, Section 100 of the *2020 CEQR Technical Manual*, Open Space Resources are defined as active and/or passive, and may include, but is not limited to, the following:

- Parks operated or managed by the City, State, or Federal governments and include neighborhood and regional parks, beaches, pools, golf courses, boardwalks, playgrounds, ballfields, and recreation centers that are available to the public at no cost or through a nominal fee, as in the case of recreation centers and golf courses;
- Open space designated through regulatory approvals (such as zoning), including large-scale permits that prescribe publicly accessible open space, such as public plazas;
- Outdoor schoolyards if available to the public during non-school hours;
- Publicly-accessible institutional campuses;
- Esplanades;
- Designated greenways, as shown on the City's Bike Map, and defined as multi-use pathways for non-motorized recreation and transportation along natural and manmade linear spaces such as rail and highway rights-of-way, river corridors, and waterfront spaces;
- Landscaped medians with seating;
- Housing complex grounds, if publicly accessible;
- Nature preserves, if publicly accessible;
- Gardens, if publicly accessible.

The *CEQR Technical Manual* defines the need for an open space assessment if the proposed action would have a direct or indirect effect on open space resources. Direct effects would occur if the proposed action would result in the physical loss of a public open space; change of use of an open space so that it no longer serves the same user population; limit public access to an open space; or cause increased noise or air pollutant emissions, odors, or shadows on public open space that would affect its usefulness, whether temporary or permanent. Indirect effects would occur if the proposed action would result in an increase of population sufficiently large enough to noticeably diminish the ability of an area's open space to serve future population.

Direct effects to open space are addressed in the sections for those specific technical areas where warranted. Construction impacts to open space are not anticipated as there would be no physical loss of public open space, no change in existing open space so that it no longer serves the same user population, would not limit public access and would not increase noise or air pollutant emissions, odors, or shadows on public open space that would affect its usefulness. An assessment of the effects of the Proposed Actions related to shadows on open space resources is provided in **Chapter 8**.

Methodology

According to the guidelines of the *CEQR Technical Manual* for analysis of residential development, census tracts with at least half of their geographic area within a one-half mile radius of the Affected Area comprise the open space study area. Using current population figures, an open space ratio is calculated for both the future No-Action and future With-Action conditions, expressed as the amount of open space acreage per 1,000 user population. Typically, a comparison is made to the median open space ratio, which is 1.50 acres per 1,000 residents, and the city's planning goal of 2.50 acres per 1,000 residents. A reduction in the open space ratio increment of more than 5 percent over future No-Action conditions generally warrants a more detailed analysis, unless the open space ratio is below the citywide average, in which case even a small reduction could be considered significant. In addition to field surveys, information from the NYC Department of City Planning's Community District Needs Statements, NYC Parks Department website, and U.S. Census data were utilized in preparing the open space analysis.

Preliminary Open Space Assessment

The Proposed Actions would result in a net increment of 483,694 GSF of development, including 354,508 GSF of residential floor area, 126,239 GSF of commercial floor area, 10,000 GSF of community facility floor area, and 60,513 GSF of cellar-level parking floor area. Meanwhile, a reduction of 67,566 GSF of manufacturing floor area would occur as a result of the replacement of the existing buildings. The Proposed Actions are projected to result in the development of 392 dwelling units within the Affected Area. Assuming an average occupancy of 2.10 persons per household based on the average household size within Queens Community District 1 (2015-2019 ACS 5-Year Survey), the population introduced as a result of the Proposed Actions would be approximately 822 residents. Adding together the increase in commercial floor area and community facility floor area as well as the decrease in manufacturing floor area, there would be approximately 372 more employees as a result of the Proposed Actions. The Affected Area is within an area that is identified as neither underserved or well-served by open space, and therefore the threshold for assessment of the potential for indirect impacts is 200 new residents or 500 additional employees. Therefore, an assessment of indirect effects on public open space resources is warranted. The Proposed Actions would introduce more than 200 new residents and fewer than 500 additional employees, as such the preliminary assessment should mainly address the residential population introduced by the Proposed Actions. However, since there would be an additional 372 employees, which is a relatively large amount, the preliminary assessment will also evaluate the impact of the additional employees on the working population open space ratio for a more comprehensive open space analysis.

Indirect Public Open Space Impact Analysis

Study Area Definition

In accordance with the guidelines established in the *CEQR Technical Manual*, the open space study area is defined to analyze both the nearby open spaces and the population using those open space resources. It is generally defined by a reasonable walking distance that users would travel to reach local open spaces and recreational areas. Pursuant to the *2020 CEQR Technical Manual*, the open space study area includes all

U.S. Census Tracts that have 50 percent or more of their area within a half-mile radius of the Affected Area for residential users. As shown in **Figure 2.7-1**, the following Census Tracts that have 50% or more of their area within the ½ mile study area are 37, 39, 43, 45, 47, 53, 75, 77, 79, 81, 85, and 238.02.

The *CEQR Technical Manual* methodology suggests conducting an initial quantitative assessment to determine whether more detailed analyses are appropriate, but also recognizes that for projects introducing a large population into an area that is underserved by open space, it may be necessary for a full, detailed analysis to be conducted. As mentioned above, the proposed rezoning area is not located within an underserved or well-served area as identified in the *CEQR Technical Manual*. However, it should be noted that in the larger study area, census tracts 45, 47, 53, 75, 77, and 79 are within areas identified as underserved by open space (see **Figure 2.7-2**).

Figure 2.7-1: Open Space Study Area Census Tracts

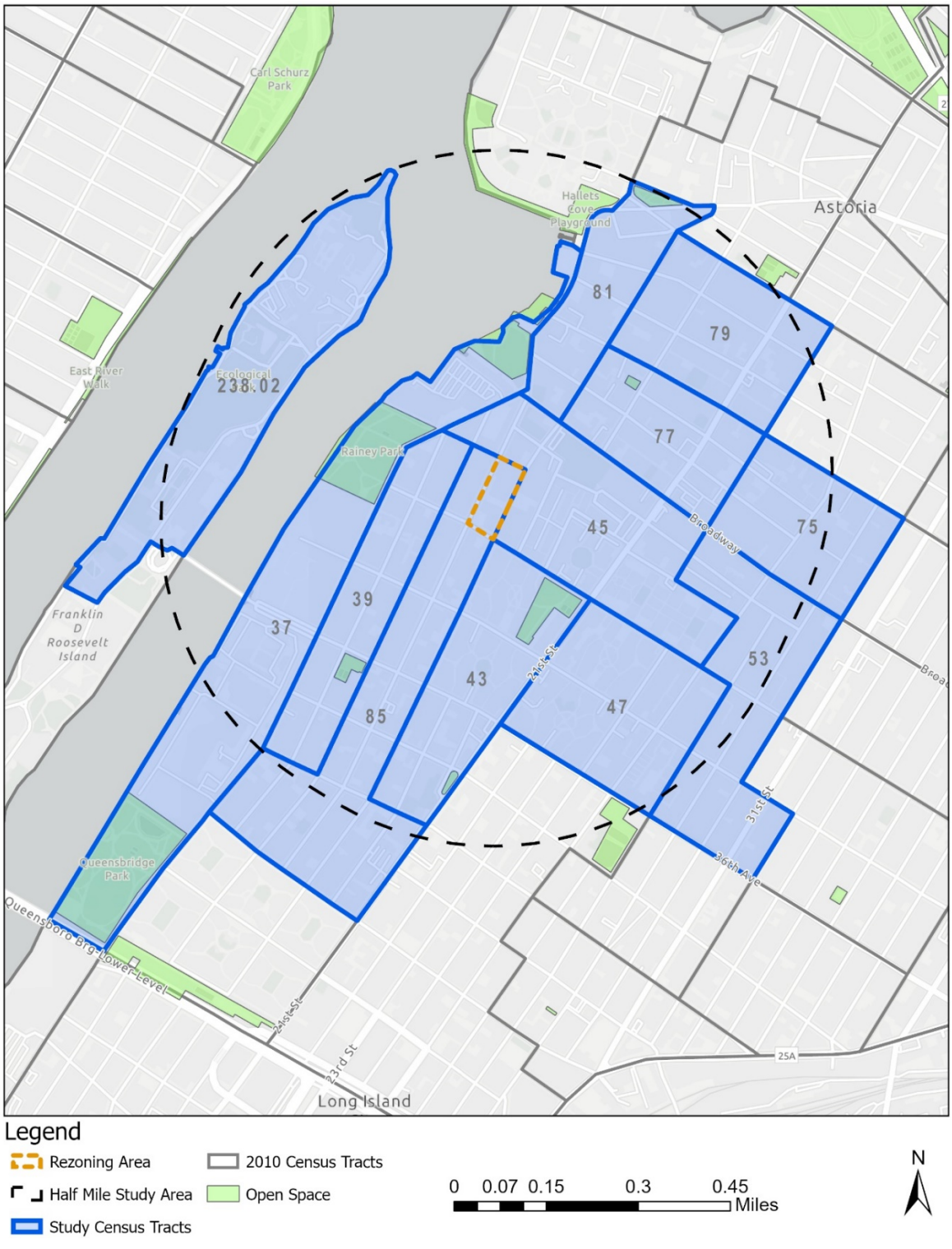

Figure 2.7-2: Underserved Open Space Areas

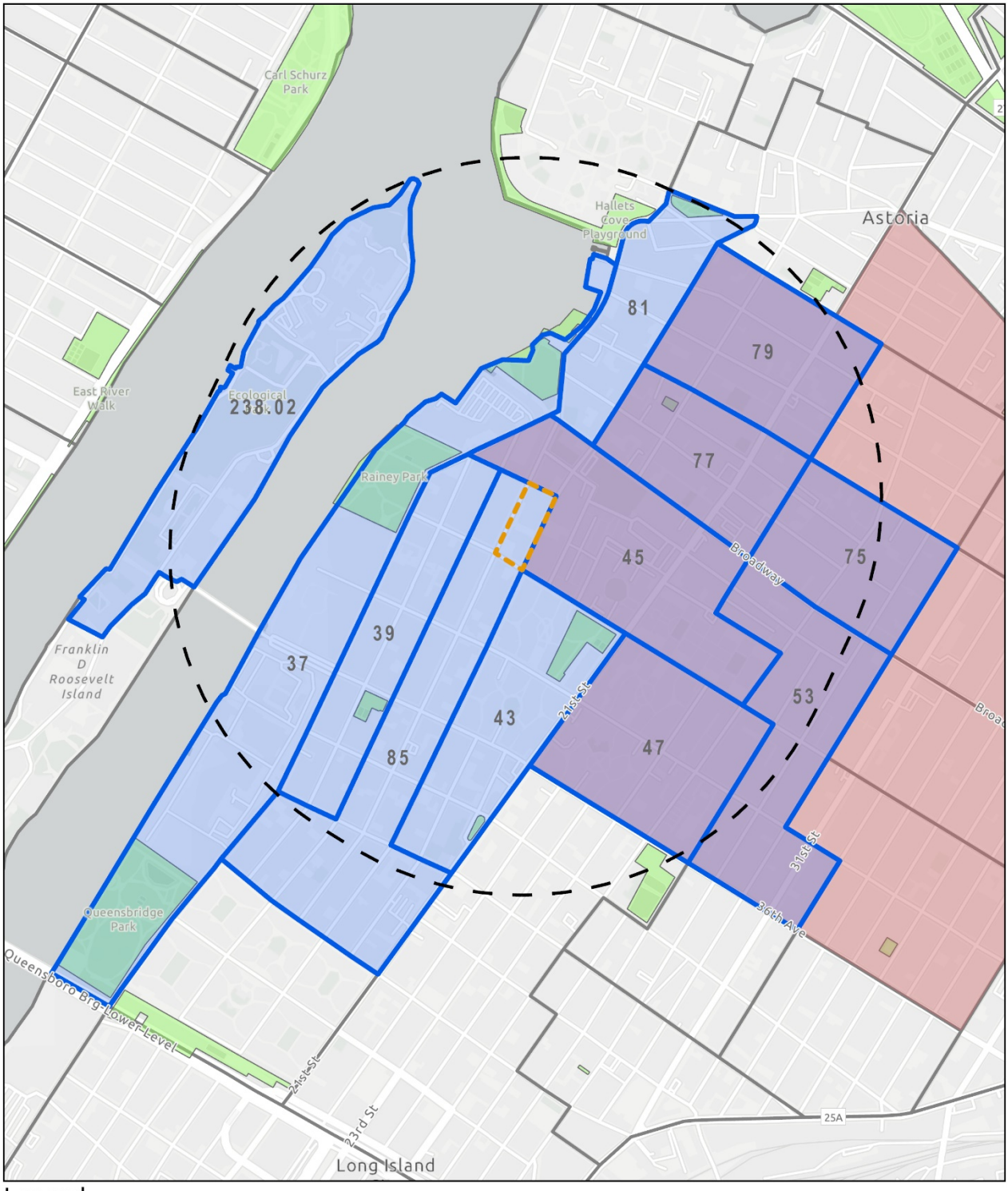

Total Population Change

Existing Condition

Based on the 2015-2019 ACS, the study area defined above, as of 2019, had a residential population of 32,411 residents, as shown in **Table 2.7-1** below.

Table 2.7-1: Study Area Resident Population (2015-2019 ACS)

Census Tract	2019 Population
Queens 37	-
Queens 39	1,439
Queens 43	2,283
Queens 45	3,194
Queens 47	3,665
Queens 53	5,092
Queens 75	3,959
Queens 77	1,856
Queens 79	2,685
Queens 81	1,269
Queens 85	883
Manhattan 238.02	6,086
Total	**32,411**

Based on the data retrieved from Census Transportation Planning Products (CTPP) 5-Year Dataset (2012-2016), as of 2016, the study area had a nonresidential population of 6,570 employees, as shown in **Table 2.7-2** below.

Table 2.7-2: Study Area Employee Population 2016 (2012-2016 CTPP)

Census Tract	2016 Population
37	499
39	774
43	316
45	631
47	314
53	434
75	419
77	480
79	222
81	323
85	1,187
238.02	971
Total	**6,570**

Future No-Action Condition

No residential development would occur in the future without the Proposed Actions within the Affected Area. There are approximately 25 active permits for residential uses within the study area, with 4,280 proposed new dwelling units. Using the same 2.10 residents per household figure as above, the No-Action condition would have 8,980 new residents introduced to the study area by the 2024 build year. The No-Action residential population would therefore be the existing population of 32,411 residents plus the 8,980 new residents introduced by the active construction projects, for a total No-Action residential population of 41,391 residents.

Similarly, no nonresidential development would occur in the future without the Proposed Actions within the Affected Area. There are approximately 31 active permits at DOB Active Major Construction platform for nonresidential development within the study area, totaling 761,409 proposed square feet. The square footage of each use category as well as the standard worker density for each use were summarized in **Table 2.7-3** below. By the 2024 built year, the No-Action condition would have 997 new employees introduced to the study area. The No-Action nonresidential population would therefore be the existing population of 6,570 employees plus the 997 new employees introduced by the active construction projects, for a total No-Action nonresidential population of 7,567 employees.

Table 2.7-3: Nonresidential Active Construction Square Footage and Induced Employee Number

Use Category	GSF	Standard Worker Density	Induced Employees
Public Assembly	79,756	1 employee per 500 GSF	160
Business	82,244	1 employee per 250 GSF	329
Educational	28,440	1 employee per 500 GSF	57
Factory/Industrial	187,467	1 employee per 1,000 GSF	187
Mercantile	80,407	1 employee per 333 GSF	241
Storage	301,585	1 employee per 15,000 GSF	20
Utility/Miscellaneous	1,510	1 employee per 450 GSF	3
Total	**761,409**		**997**

Future With-Action Condition

The With-Action residential population would be the No-Action residential population of 41,391 residents described above plus the 822 residents anticipated as a result of the Proposed Actions. The With-Action residential population would be 42,213 residents.

The With-Action nonresidential population would be the No-Action nonresidential population of 7,567 employees described above plus the 372 employees anticipated as a result of the Proposed Actions. The With-Action residential population would be 7,939 employees.

Table 2.7-4: Existing, No-Action, and With-Action Populations			
	Existing	No-Action	With-Action
Residents	32,411	41,391	42,213
Nonresidents	6,570	7,567	7,939

Existing = 2015-2019 American Community Survey and 2012-2016 CTPP Data; No-Action = Existing plus 4,280 proposed dwelling units and 761,409 proposed non-residential GSF from active DOB permits; With-Action = No-Action plus 822 additional residents and 372 additional employees from the Projected Development Site 1 and 2.

Open Space Resources

Twelve open space resources within the study area were identified in **Table 2.7-5**. There are 53.89 acres of open spaces resources in the Study Area— 35.47 are considered active and 18.42 are considered passive based on field visits and a review of open space site plans. The location of these resources present in the Study Area, are shown in **Figure 2.7-3.**

In the study area, the closest public open space resources to the proposed rezoning area are Rainey Park and Ravenswood Playground. Rainey Park is a waterfront open space located west of the proposed rezoning area, bounded by 33rd Road, Vernon Boulevard, 34th Avenue, and the East River. Rainey Park is operated by Department of Parks and Recreation (DPR), and contains 8.09 acres of recreational space, including baseball fields, playgrounds, eateries, bathrooms, bicycle paths, walking paths, dog-friendly areas, and benches. Just southeast of the proposed rezoning area is Ravenswood Playground, which is located within the NYCHA Ravenswood Houses campus and operated by DPR. The 2.76-acre playground is bounded by 21st Street, 34th Avenue, and 35th Avenue. This open space resource includes fitness equipment, playgrounds, basketball and handball courts, spray showers, and benches. This resource may be affected by the adjacent Department of Sanitation (DSNY) transfer station which generally may produce excessive noises and unattractive odors.

In the northern section of the open space study area are the Socrates Sculpture Garden and Astoria Health Playground. The Socrates Sculpture Garden is a waterfront park located on Vernon Boulevard between Broadway and 30th Drive. The 4.89-acre park is operated by DPR and includes art installments, eateries, and benches. Astoria Health Playground is located on 14th Street between 31st Avenue and 31st Drive. The 0.21-acre park is located adjacent to the New York City Department of Health's (DOH's) Astoria Health Center and is operated by DPR. The playground includes amenities such as playground equipment and benches. According to DPR's website, Astoria Health Playground has received funding from the Mayor's office of approximately $3 million for reconstruction, which is completed in March 2019 and added new trees, plantings, and park light poles to the playground.

In the southern section of the open space study area are Spirit Playground, Sixteen Oaks Grove, and Queensbridge Park. Spirit Playground is located at 36th Avenue between 9th and 10th Streets, southwest of the proposed rezoning area. The 0.79-acre playground is jointly operated by DPR and the New York City Department of Education (DOE), and contains basketball and handball courts, playgrounds, spray showers, and benches. Sixteen Oaks Grove is bounded by 37th Avenue, 14th Street, and 21st Street to the southeast of the proposed rezoning area. The small, 0.22-acre park is operated by DPR and includes sixteen oak trees

and benches. Queensbridge Park is located to the southwest of the proposed rezoning area on Vernon Boulevard roughly between 40th Avenue and 41st Road. Queensbridge Park is the largest open space resource within the open space study area, spanning 20.34 acres, and is operated by DPR. The waterfront park includes barbecuing areas, bathrooms, baseball fields, dog-friendly areas, eateries, handball courts, playgrounds, spray showers, bicycle paths, walking paths, and benches.

As it is approximately a 10-minute walk from the proposed development to the base of the Roosevelt Island Bridge, it is also reasonable to take the publicly accessible open space resources located on Roosevelt Island into consideration. Different from the open space resources surrounding the development site in Queens that are completely or partially owned and operated by NYCDPR, all the open spaces on Roosevelt Island are owned and operated by Roosevelt Island Operating Corporation (RIOC). Occupying the northern tip of Roosevelt Island above the waters of the East River, Lighthouse Park, a fishing, picnic, and barbecue destination, provides a riverside walk flanked by bollards, semi-circular concrete benches, elevated terraces with additional seating, sunken picnic areas with retaining walls functioning as benches, barbeques, and tables, large tracts of grass, and panoramic views of New York City. The park features a 50-foot-tall stone lighthouse built by New York City in 1872. The park was named to the National Register of Historic Places on March 16, 1972 and was designated a New York City Landmark on March 23, 1976. Manhattan Park Parcel A is a 1.35-acre pocket park surrounded by high-rise residential buildings. It has walking lanes, benches, and plantations to provide people with 24-hour access to a quiet and relaxing passive open space.

There are also three outdoor athletic fields located on Roosevelt Island within the study area, which are Pony Field, Jack McManus Field, and Capobianco Field. Pony Field, located just south of 888 Main Street, is a large softball and kickball field with an area of roughly 1.39 acres. Jack McManus Field, with an area of 1.75 acres, is used as a flag football, lacrosse, and soccer field. Capobianco Field, located across the street from 595 Main Street, is a baseball field that is open for permitted use from dawn to dusk. Together with the adjacent playground and handball court, Capobianco Field has a joint total area of about 2.3 acres. Public access to all the three outdoor fields is allowed any time when they are not otherwise reserved.

Table 2.7-5: Open Space Resources								
Name	**Address**	**Ownership**	**Acreage**	**% Active**	**% Passive**	**Total Active**	**Total Passive**	**Features**
Rainey Park	Vernon Blvd. bet. 33 Rd. and 34 Ave.	NYC DPR	8.09	75	25	6.07	2.02	Pg, DA, BF, Ba, Ea, Be
Socrates Sculpture Park	Vernon Blvd. bet. Broadway and 30 Dr.	NYC DPR	6.28	75	25	4.71	1.57	Ba, WF, OA
Ravenswood Playground	21 St. bet. 34 Ave. and 35 Ave.	NYC DPR	2.76	75	25	2.07	0.69	FE, Ba, Be, HC, Pg, SS
Spirit Playground	36 Ave bet. 9 St. and 10 St.	NYC DPR/DOE	0.79	75	25	0.59	0.20	HC, Pg, Be, SS, Ba
Sixteen Oaks Grove	37 Ave., 14 St., 21 St.	NYC DPR	0.22	0	100	0	0.22	Be
Astoria Health Playground	14 St. bet. 31 Ave. and 31 Dr.	NYC DPR	0.21	75	25	0.16	0.05	Pg, Be
Queensbridge Park	Queensboro Bridge, 41 Rd., 40 Ave. bet. The East River, Vernon Blvd., and 21 St.	NYC DPR	20.34	75	25	15.26	5.09	BA, BF, Ba, DA, HC, Pg, SS, Be
Lighthouse Park	900 Main St.	RIOC	8.41	25	75	2.10	6.31	BA, Be, Ba
Pony Field	888 Main St.	RIOC	1.39	75	25	1.04	0.35	BF
Jack McManus Field	729 Main St.	RIOC	1.75	100	0	1.75	0	SF
Manhattan Park Parcel A	4 River Rd.	RIOC	1.35	0	100	0	1.35	Be
Roosevelt Island Handball Court/ Capobianco Field	595 Main St.	RIOC	2.30	75	25	1.73	0.58	Pg, HC, BF, Be
Total			**53.89**	**65.82**	**34.18**	**35.47**	**18.42**	

BA = Barbecuing Areas; SS = Spray Showers; SF = Soccer Fields; Pg = Playgrounds; FE = Fitness Equipment; Ba = Bathrooms; Be = Benches; BF = Baseball Fields; HC = Handball Courts; DA = Dog-friendly Areas; Ea = Eateries; WF = Water Fountain; OA = Outdoor Arts

Figure 2.7-3: Open Space Location in Study Area

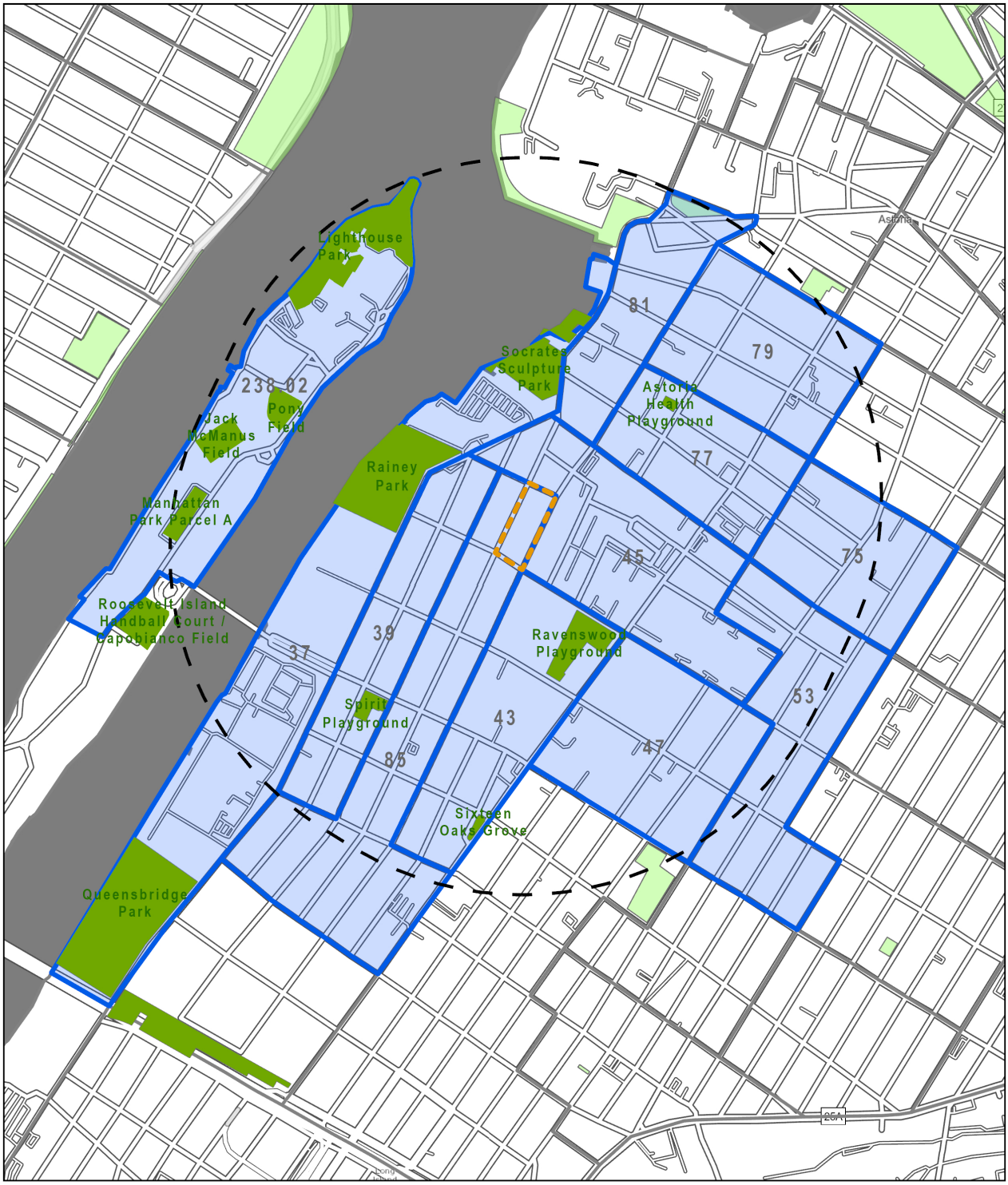

Existing Condition

The study area has 53.89 acres of open space (35.47 for active use; 18.42 for passive use), an existing residential population of 32,411, and an existing nonresidential population of 6,570. The overall open space ratio (OSR) under existing conditions is 1.66 acres per thousand residents for the residential population.

Pursuant to *CEQR Technical Manual*, the optimal ratio for worker populations is 0.15 acres of passive open space per 1,000 nonresidents, since nonresidents and specifically workers tend to use passive open space. Therefore, the passive open space ratio under existing conditions is 2.80 acres per thousand employees for nonresidential population, which is well above the optimal ratio for worker populations.

Future No-Action Condition

In the future without the Proposed Actions, there would be 56 total active permits (25 for residential uses and 31 for nonresidential uses) at DOB Active Major Construction platform within the study area. As described above in the population projection, with a total of 4,280 dwelling units and 761,409 square feet of nonresidential uses, the population for the study area in the 2024 build year is forecasted to be 41,391 residents and 7,567 employees and is projected to be served by the same 53.89 acres of open space (35.47 for active use; 18.42 for passive use) as in the existing condition. With this population, the overall residential OSR would be 1.30 while the passive nonresidential OSR would be 2.43. The overall residential OSR is below the citywide average of 1.5 acres per thousand people and reflects the area's shortfall of open spaces for residential populations, while the passive nonresidential OSR is well above the 0.15 acres of passive open space per 1,000 nonresidents.

Future With-Action Condition

The Proposed Actions would result in an increase in the No-Action population by 822 residents and 372 employees by the 2024 build year. The total 2024 build year With-Action residential population would be 42,213 and nonresidential population would be 7,939. With this increase in residential population, the overall residential OSR would be 1.28 acres per 1,000 residents, or a 1.95 percent reduction from the No-Action overall residential OSR. For nonresidential populations, the passive nonresidential OSR would be 2.32 acres of passive open space per 1,000 nonresidents, or a 4.69 percent reduction from the No-Action passive nonresidential OSR.

Conclusion

Under the No-Action and With-Action conditions, the overall residential OSR in the area would be below 1.5 acres per thousand residents, which is the citywide average. In the event that a Study Area has a low open space ratio (e.g., below the citywide average of 1.5 acres per 1,000 residents or 0.15 acres of passive space per 1,000 nonresidential users), the *CEQR Technical Manual* recommends preparing a detailed analysis if the Proposed Actions would reduce the OSR by even a small amount, which could be less than 1%. Given the analysis above, the Proposed Actions would reduce the OSR by 1.95 percent to 1.28 acres per 1,000

residents. Accordingly, a detailed analysis of open space resources is not required, and there would be no significant adverse impacts to open space.

The passive nonresidential OSR in the area would be well above 0.15 acres of passive open space per thousand employees under all three conditions, which is set as the optimal OSR for worker populations pursuant to *CEQR Technical Manual*. In addition, the decrease in the passive nonresidential OSR induced by the Proposed Development would be 4.69 percent, which is smaller than 5 percent, indicating that the passive nonresidential OSR would not be significantly impacted by the Proposed Development. Given that the area has a high passive nonresidential OSR and the OSR decrease induced by the Proposed Actions would be 4.69 percent, a detailed open space analysis for nonresidential populations is not warranted.

Chapter 8: Shadows

The *CEQR Technical Manual* defines a shadow as the condition that results when a building or other built structure blocks the sunlight that would otherwise directly reach a certain area, space or feature. An incremental shadow is the additional or new shadow that a building or other built structure resulting from a proposed action would cast on a sunlight-sensitive resource during the year. The sunlight-sensitive resources of concern are those resources that depend on sunlight or for which direct sunlight is necessary to maintain the resource's usability or architectural integrity, including public open space, architectural resources and natural resources. Shadows can have impacts on publicly accessible open spaces or natural features by adversely affecting their use and important landscaping and vegetation. In general, increases in shadow coverage make parks feel darker and colder, affecting the experience of park patrons. Shadows can also have impacts on historic resources whose features are sunlight-sensitive, such as stained-glass windows, by obscuring the features or details, which make the resources significant.

The duration and dimensions of shadows are determined by the geographic location of the area from which the shadow is cast and the time of day and season. Shadows cast during the morning and evening, when the sun is low in the sky, are longer, while midday shadows are shorter in length. Shadows in winter, when the sun arcs low across the southern sky, are also longer throughout the day than at corresponding times in spring and fall seasons. In summer, the high arc of the sun casts shorter shadows than at any other time of year, and early and late shadows during the summer are cast farther towards the south than shadows cast in early and late winter months.

The *CEQR Technical Manual* states that a shadow assessment considers projects that result in new shadows long enough to reach a sunlight-sensitive resource. Therefore, a shadow assessment is warranted only if the project would either result in: (a) new structures (or additions to existing structures including the addition of rooftop mechanical equipment) of 50 feet or more; or, (b) be located adjacent to, or across the street from, a sunlight-sensitive resource.

The sunlight-sensitive resources of concern are those resources that depend on sunlight or for which direct sunlight is necessary to maintain the resource's usability or architectural integrity, including public open space, architectural resources and natural resources. In general, shadows on city streets and sidewalks or on other buildings are not considered significant. Some open spaces also contain facilities that are not sensitive to sunlight. These are usually paved such as handball or basketball courts, places containing no seating areas and no vegetation, no unusual or historic plantings, or containing only unusual or historic plantings that are shade tolerant. These types of facilities do not need to be analyzed for shadow impacts. Additionally, it is generally not necessary to assess resources located to the south of projected development sites, as shadows cast by the action-generated development would not be cast in the direction of these resources. Furthermore, shadows occurring within one and one-half hour of sunrise or sunset generally are not considered significant in accordance with *CEQR Technical Manual* guidance.

Methodology

This preliminary analysis of shadows follows the guidelines set forth in the *2020 CEQR Technical Manual* for a preliminary assessment (Section 310). According to the *2020 CEQR Technical Manual*, a preliminary shadow assessment includes the development of a base map showing the site location in relationship to any sunlight-sensitive resources as per guidelines provided in the *2020 CEQR Technical Manual*. Following these guidelines, the longest shadow study area is determined, and a Tier 1 screening assessment is conducted to determine if any sunlight-sensitive resources fall within the study area. If no resources are identified, no further analysis would be required. If sunlight-sensitive resources lay within the longest shadow study area, the next tier of screening assessment should be conducted. This preliminary assessment includes a basic description of the proposed project that would be facilitated by the Proposed Actions in order to determine whether a more detailed assessment would be appropriate.

Projected Development Sites 1 and 2 and Potential Development Site 1 would each be developed with buildings of 110 feet in height (95-foot building plus an additional 15 feet for mechanical bulkheads) in the proximity of sunlight sensitive resources. Accordingly, a preliminary assessment of shadows is warranted.

Tier 1 Shadow Screening Assessment

The shadow assessment begins with a preliminary screening assessment to ascertain whether a project's shadow may reach any sunlight-sensitive resources at any time of the year. If the screening assessment does not eliminate this possibility, a detailed shadow analysis may be warranted to determine the extent and duration of the net incremental shadow resulting from the project. The effects of shadows on a sunlight-sensitive resource are site-specific; therefore, as directed in the *CEQR Technical Manual*, the screening assessment was performed for the relevant Projected Development Sites to determine whether it falls within the range of maximum possible shadow cast on potential sunlight sensitive resources as described above. To determine this, a Tier 1 Screening Assessment was performed in accordance with the *CEQR Technical Manual*. A base map is developed that illustrates the proposed site location in relationship to any sunlight-sensitive resources. The longest shadow study area is then determined, which encompasses the site of the proposed project and a perimeter around the site's boundary with a radius equal to the longest shadow that could be cast by the proposed structure, which is 4.3 times the height of the structure that occurs on December 21st, the winter solstice. A map as shown in **Figure 2.8-1** was prepared placing NYC Department of Parks Resources and Selected Facilities and Program Sites provided on NYC.gov Department of City Planning GIS portal, as well as a list of park and public spaces provided from NYC.gov DOITT- GIS and Mapping Portal, as well as a screen of SHPO and NYC Landmark Listed Properties. After this a buffer map was prepared to display the maximum possible shadow of 473 feet, which could be cast from the Projected Development Sites in the proposed rezoning area. This shadow cast was derived by multiplying the height of 110 feet (the maximum possible height under the proposed rezoning with MIH bonus plus a 15-foot bulkhead) by 4.3 (the *CEQR Technical Manual* multiplier representing the maximum shadow cast from any object as being 4.3 times its height). The potentially impacted area of shadow from the projected site was then compared to those resources identified above to see if any fell within the shadow cast area.

Based on the Tier 1 analysis in **Figure 2.8-1**, it was determined that one sunlight-sensitive resource, The Noguchi Museum (outdoor garden), is within reach of the longest possible shadow that could be cast from the Projected and Potential Development buildings associated with the requested rezoning within the Affected Area. Therefore, a Tier 2 Assessment is required to determine what impacts, if any, may occur as a result of the Proposed Actions on the Noguchi Museum Garden. Two LPC eligible buildings located at 12-12 33rd Avenue, the former Barkin, Levin and Company building, and the aforementioned Noguchi Museum building are within the radius, but LPC was consulted for their review of the buildings and determined that neither building possesses sunlight-sensitive features, and no analysis of shadow impacts on the buildings is required.

Figure 2.8-1: Tier 1 Shadow Assessment

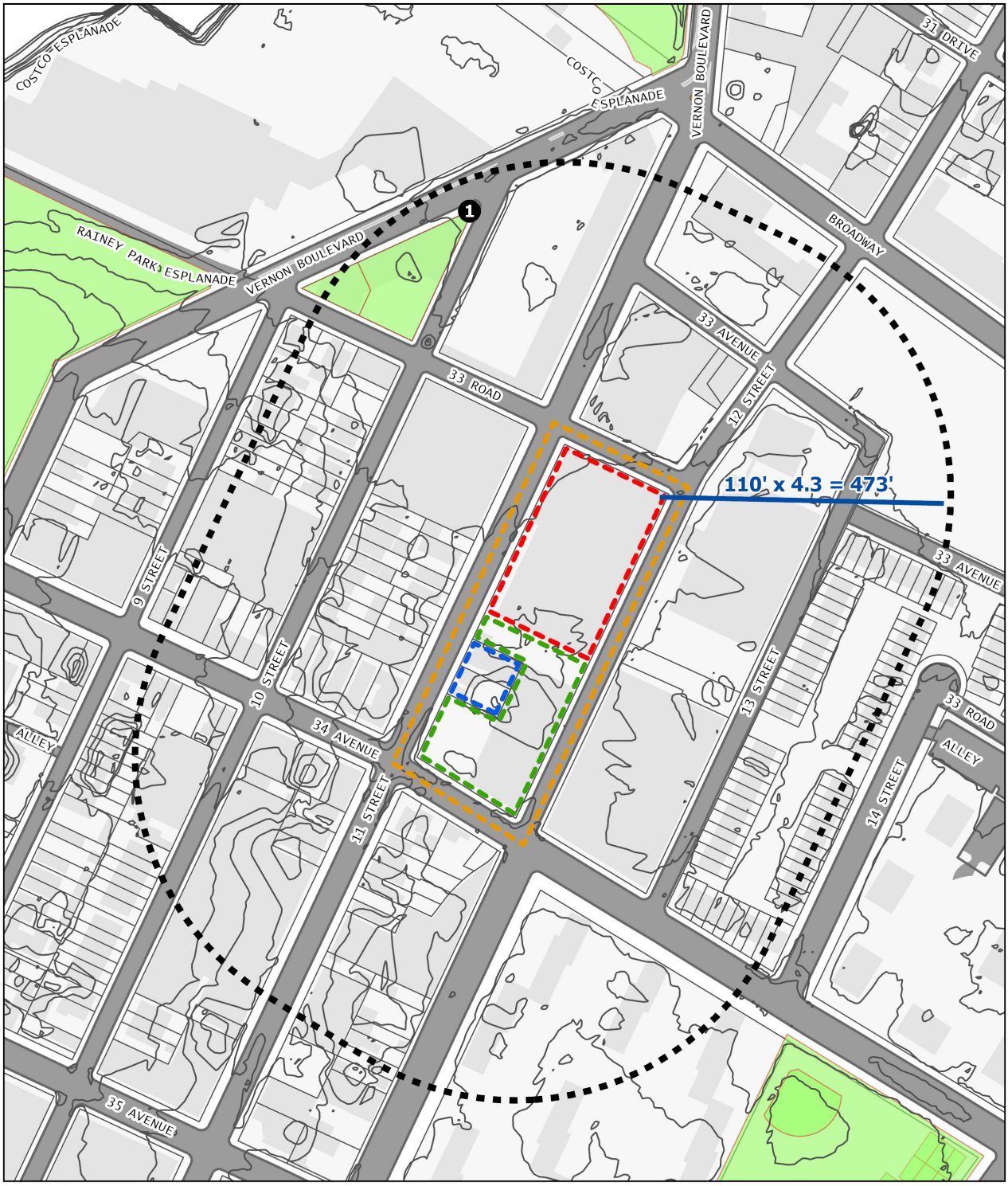

Tier 2 Shadow Screening Assessment

The *CEQR Technical Manual* states that if any portion of a sunlight-sensitive resource lies within the longest shadow study area, a Tier 2 screening assessment should be performed. Because of the path the sun travels across the sky in the northern hemisphere, no shadow can be cast in a triangular area south of any given project site. In New York City, this area lies between -108 and +108 degrees from true north. For a Tier 2 screening assessment, sunlight-sensitive resources within the triangular area cannot be shaded by new development sites, and are screened out. The complementing portion to the north within the longest shadow study area is the area that can be shaded by the proposed project.

As shown in **Figure 2.8-2**, the Tier 2 screening assessment showed that the Noguchi Museum (Block 314, Lots 1 and 7501; Resource 1) is inside of the -108/+108 area, and therefore a Tier 3 screening would be required.

Figure 2.8-2: Tier 2 Shadow Assessment



Tier 3 Shadow Screening Assessment

The *CEQR Technical Manual* states that if any portion of a sunlight-sensitive resource is within the area that could be shaded by the Proposed Project, a Tier 3 screening assessment should be performed. Because the sun rises in the east and travels across the southern part of the sky to set in the west, a project's earliest shadows would be cast almost directly westward. Throughout the day, they would shift clockwise (moving northwest, then north, then northeast) until sunset, when they would fall east. Therefore, a project's earliest shadow on a sunlight-sensitive resource would occur in a similar pattern, depending in the location of the resource in relation to the project site. For a Tier 3 screening assessment, if the assessment determines that no shadows from the development would reach any of the sunlight-sensitive resources on any of the representative analysis days then no further assessment for those days is needed. If, however, in the absence of intervening buildings shadows from the proposed buildings would reach sunlight-sensitive resources on any of the representative analysis days then a detailed shadow analysis would be warranted for those days.

As shown in **Figures 2.8-3 to 2.8-6** below, shadows from the projected buildings would reach the sunlight sensitive resource, the Noguchi Museum, on December 21st. A detailed shadow analysis for Sunlight Sensitive Resource 1 is required.

Figure 2.8-3: Tier 3 December

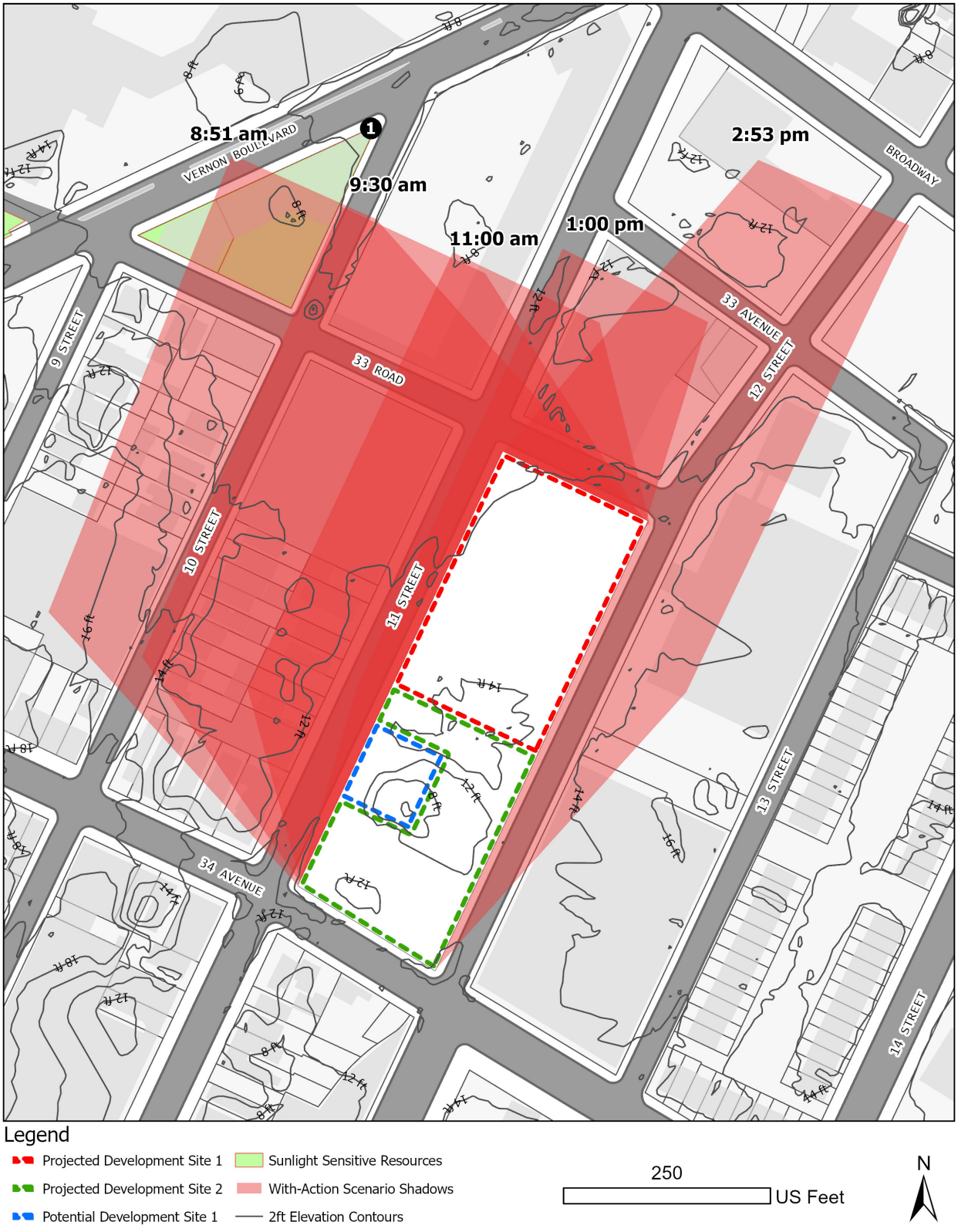

Figure 2.8-4: Tier 3 March/September



Figure 2.8-5: Tier 3 May/August

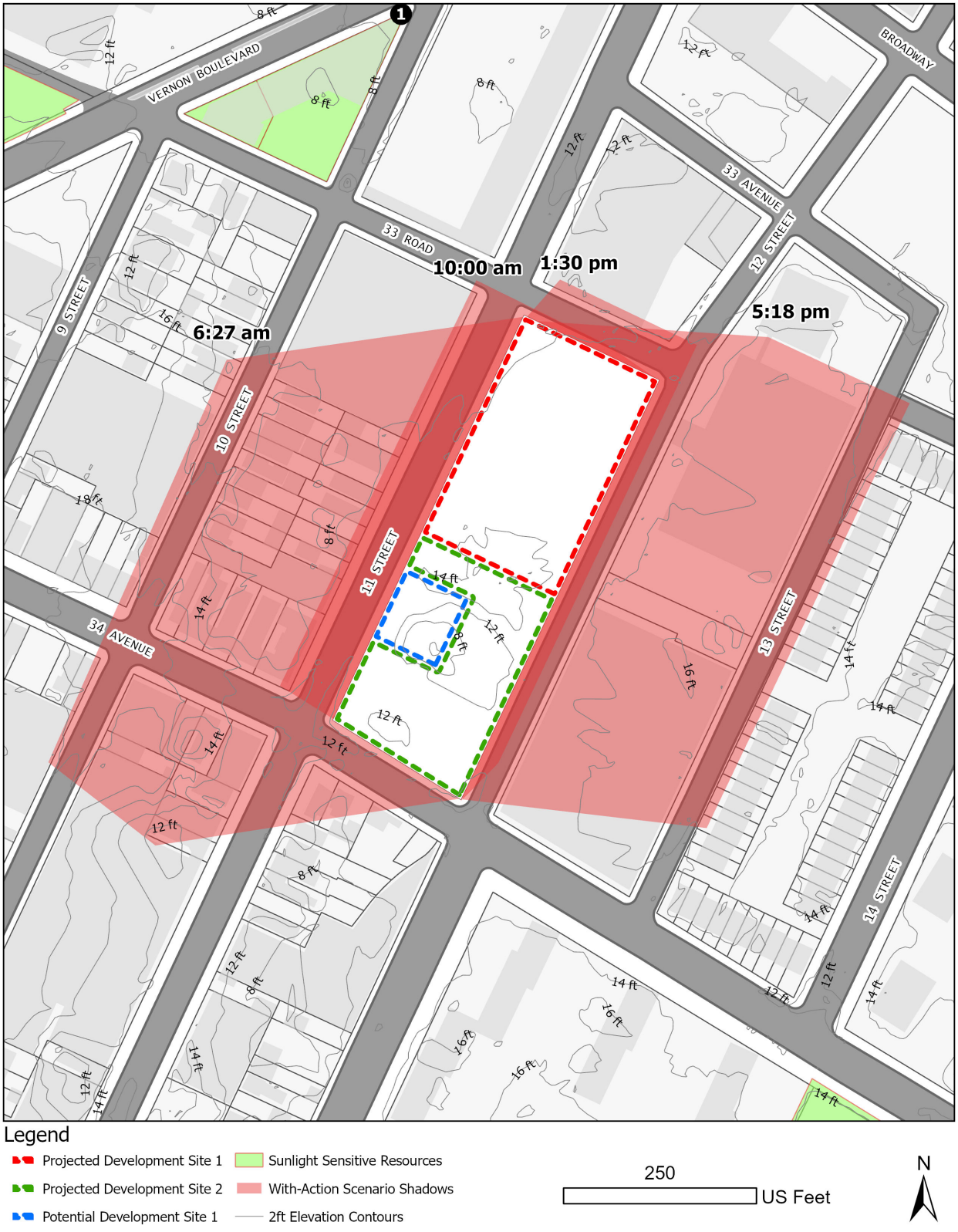

Figure 2.8-6: Tier 3 June

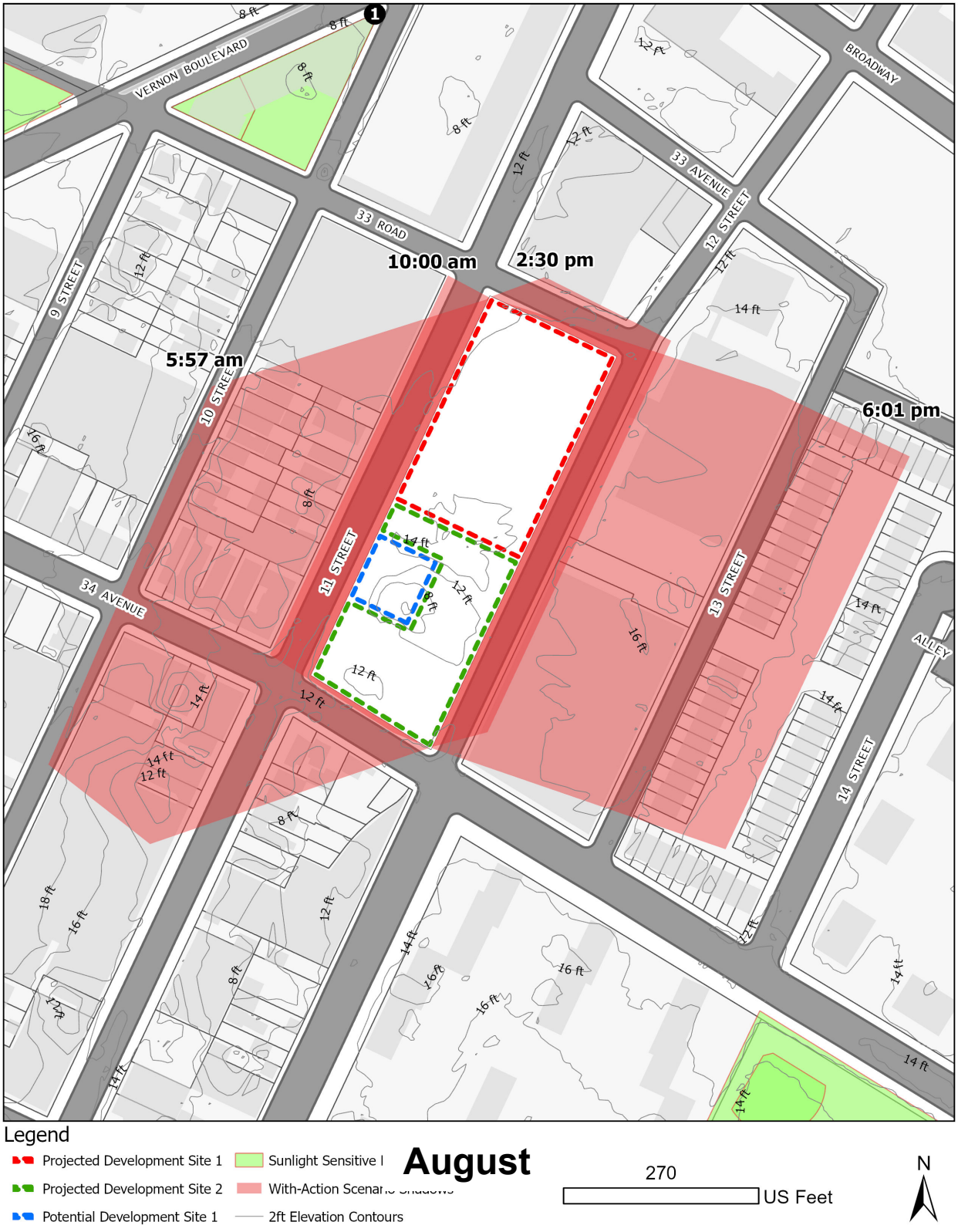

Detailed Shadow Analysis

The *CEQR Technical Manual* states that a detailed shadow analysis is warranted when the screening analyses do not rule out the possibility that project-generated shadows would reach any sunlight-sensitive resources. The purpose of the detailed analysis is to determine the extent and duration of shadows that fall on a sunlight-sensitive resource as a result of the proposed project. The results of the detailed shadow analyses on the identified resources of concern is summarized in **Table 2.8-1**, and the incremental shadows cast by the Projected Development Sites is shown below in **Figure 2.8-7** for the December analysis period. The shadows of intervening buildings were included in the detailed shadow analysis in order to identify the incremental shadows cast by the Projected Buildings.

Based on the Findings of the Detailed Shadow Analysis, the Proposed Actions would cast shadows on the Noguchi Museum (Block 314, Lots 1 and 7501; Resource 1) on December 21st for a 1-hour period in the morning.

Table 2.8-1: Detailed Shadows Analysis Table

Analysis Day	21-Dec	March 21 / September 21	May 6 / August 6	21-Jun
Timeframe Window	8:51 a.m. - 2:53 p.m.	7:36 a.m. - 4:29 p.m.	6:27 a.m. - 5:18 p.m.	5:57 a.m. - 6:01 p.m.
Sunlight Sensitive Resource 1	The Noguchi Museum			
Shadow enter - exit times	8:51 am - 9:30 am			
Incremental Shadow Duration	39 Minutes			
Note: Daylight savings time not used				

Figure 2.8-7: December Detailed Shadows Analysis

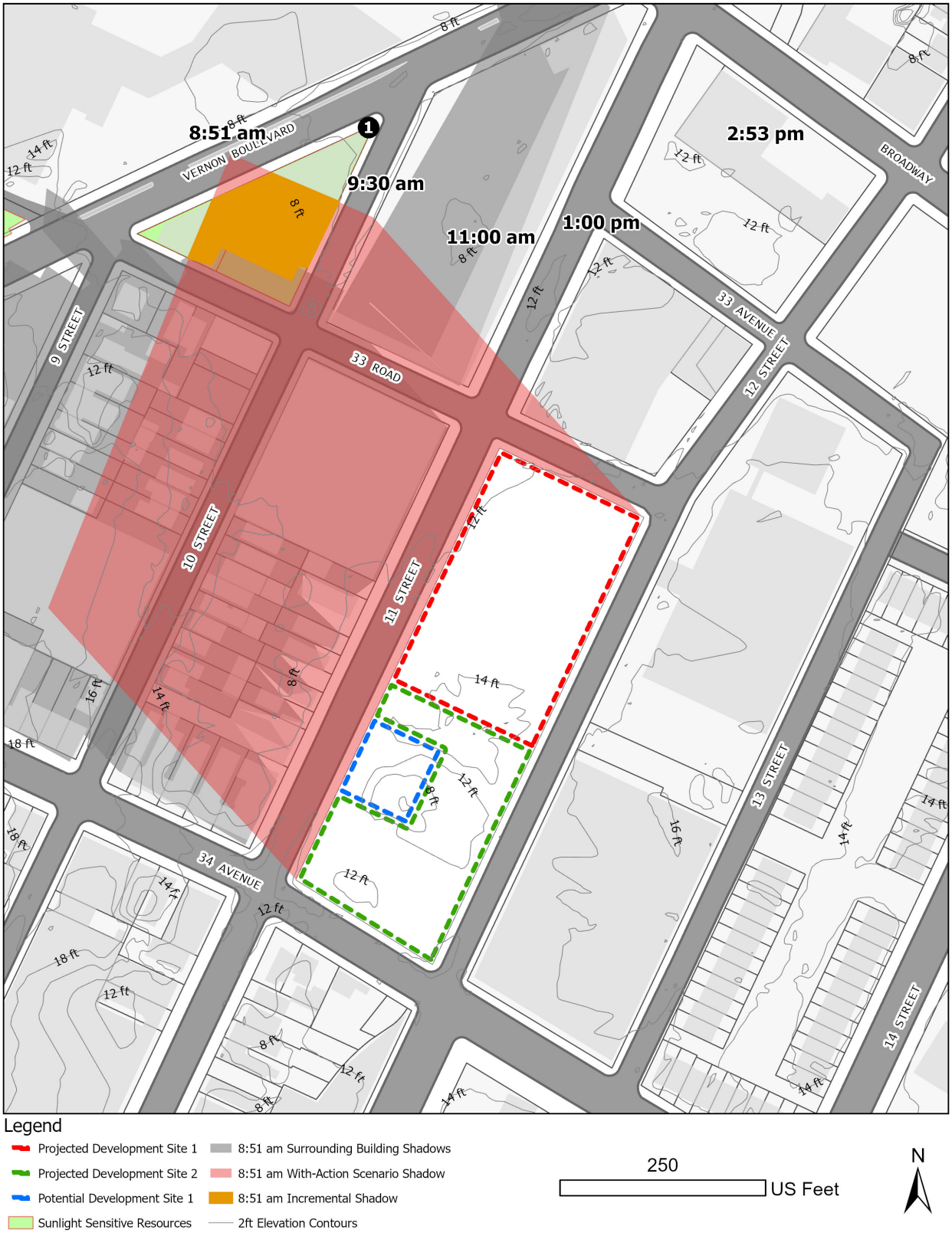

The Noguchi Museum – Exterior Façade (Sunlight Sensitive Resource 1)



The Noguchi Museum – Interior Sculpture Garden (Sunlight Sensitive Resource 1)



The Noguchi Museum, located in Long Island City, Queens, is housed in a repurposed 1920s red brick industrial building, with an attached concrete pavilion designed and built in the 1980s by Isamu Noguchi in collaboration with Shoji Sadao. Founded in 1985 by Noguchi to show his life's work in a context essential to his vision, the two-story Museum contains approximately 27,000 square feet of exhibition space, including a renowned sculpture garden.

Determination of Shadow Impact Significance

The *CEQR Technical Manual* states that the determination of significance of shadow on a sunlight-sensitive resource is based on: (1) the information resulting from the detailed shadow analysis describing the extent and duration of incremental shadows; and (2) an analysis of the resource's sensitivity to reduced sunlight. Determining whether this impact is significant or not, under CEQR, depends on the extent and duration of the incremental shadow and the specific context in which the impact occurs.

For open space and natural resources, the uses and features of a resource is an indicator of its sensitivity to shadows. Shadows occurring during the cold-weather months, for example, generally do not affect the growing season of outdoor vegetation. This sensitivity is assessed for warm-weather-dependent features such as vegetation that could be affected by a loss of sunlight during the growing season, and for features (such as benches) that could be affected by a loss of winter sunlight. Generally, four to six hours a day of sunlight, particularly in the growing season, is often a minimum requirement. Where the incremental shadows from the project fall on sunlight-sensitive features or uses, the analysis assesses the loss of sunlight relative to sunlight that would be available without the project.

As stated in the *CEQR Technical Manual*, to determine impact significance, an incremental shadow is generally not considered significant when its duration is no longer than 10 minutes at any time of year and the resource continues to receive substantial direct sunlight. A significant shadow impact generally occurs when an incremental shadow of 10 minutes or longer falls on a sunlight-sensitive resource and results in one of the following:

- *Vegetation* - A substantial reduction in sunlight available to a sunlight-sensitive feature of the resource to less than the minimum time necessary for its survival (when there was sufficient sunlight in the future without the project). Or, a reduction in direct sunlight exposure where the sunlight-sensitive feature of the resource is already subject to substandard sunlight (i.e., less than minimum time necessary for its survival).
- *Open Space Utilization* - A substantial reduction in the usability of open space as a result of increased shadow.
- *For Any Sunlight-Sensitive Feature of a Resource* - Complete elimination of all direct sunlight on the sunlight-sensitive feature of the resource, when the complete elimination results in substantial effects on the survival, enjoyment, or, in the case of open space or natural resources, the use of the resource.

Conclusion

Sunlight Sensitive Resource 1 (The Noguchi Museum)

Sunlight Sensitive Resource 1, The Noguchi Museum, is a two-story art exhibition and office building with a renowned outdoor sculpture garden of more than 10,000 SF, featuring Japanese garden design and planting that are native to Japan, the United States, or both. The range of trees, shrubs, and vines create a reflective space that can be enjoyed in all seasons.

For the December 21st analysis period of Sunlight Sensitive Resource 1, there would be 39 minutes of incremental shadows cast, leaving 5 hours and 23 minutes of direct sunlight. Though the shadows cast from

the Projected and Potential Buildings would cover the middle portion of the museum building along Vernon Boulevard and the entire outdoor sculpture garden at 8:51 AM in the morning, the movement of the shadows from 8:51 AM (enter time) to 9:30 AM (exit time), leaves the majority of the building and garden with direct sunlight of more than 5 hours. The duration of shadows cast on the museum building and the garden is shown to be limited, and there would be no adverse impacts for the December 21st analysis period on the Open Space Utilization. Additionally, normal operating hours for the museum are typically 10am to 5pm, and any action-induced shadows from the Proposed Actions would not affect operating hours.

In addition, December is not considered a growing season for vegetation. The shadows in December typically would not have a significant adverse impact on the plantings in the outdoor garden. Allowing for the possibility that there may be unique plant species from Japan in the garden that grows in the winter, five hours of direct sunlight is within the range of the minimum requirement of 4 to 6 hours for vegetation pursuant to the *CEQR Technical Manual*. It is reasonable to believe that the shadows derived from the Projected and Potential Buildings would not have significant adverse impacts on the vegetation in December.

The shadows derived from the Projected and Potential Buildings would not reach the sunlight sensitive resource, The Noguchi Museum, on three analysis days in March/September, May/August, and June. On December 21st, the shadows derived from the Projected and Potential Buildings would affect the sunlight sensitive resource for a one-hour period in the morning with limited extent and duration. No adverse impact is expected on the Open Space Utilization or vegetation of the museum and therefore no further analysis is warranted.

Chapter 9 Historic and Cultural Resources

An assessment of historic and cultural resources is usually necessary for projects that are located in close proximity to historic or landmark structures or districts, or for projects that require in-ground disturbance, unless such disturbance occurs in an area that has been formerly excavated, according to the *CEQR Technical Manual*.

The term "historic resources" defines districts, buildings, structures, sites, and objects of historical, aesthetic, cultural, architectural and archaeological importance. In assessing both historic and cultural resources, the findings of the appropriate city, state, and federal agencies are consulted. Historic resources include: the New York City Landmarks Preservation Commission (LPC) designated landmarks, interior landmarks, scenic landmarks, and historic districts; locations being considered for landmark status by the LPC; properties/districts listed on, or formally determined eligible for, inclusion on the State and/or National Register (S/NR) of Historic Places; locations recommended by the New York State Board for Listings on the State and/or National Register of Historic Places and National Historic Landmarks.

Architectural Resources

According to the *CEQR Technical Manual*, significant adverse impacts to historic and cultural resources could potentially result if a proposed action affects those characteristics that make a resource eligible for LPC designation or S/NR listing. The Future With-Action Scenario's potential for significant adverse impacts on historic resources were assessed in accordance with **Table 2.9-1** to determine (a) whether there would be a physical change to any designated resource or its setting, and (b) if so, is the change likely to diminish the qualities of the resource that make it important (including non-physical changes such as context or visual prominence).

Table 2.9-1 Possible Impacts to Historic and Cultural Resources

Construction resulting in ground disturbance, including construction of temporary roads and access facilities, grading, and landscaping.
Below-ground construction, such as excavation or installation of utilities.
Physical destruction, demolition, damage, alteration or neglect of all or part of an historic property.
Changes to the architectural resource that cause it to become a different visual entity, such as a new location, design, materials, or architectural features.
Isolation of the property from, or alteration of, its setting or visual relationship with the streetscape. This includes changes to the resource's visual prominence so that it no longer conforms to the streetscape in terms of height, footprint, or setback; is no longer part of an open setting; or can no longer be seen as part of a significant view corridor.
Introduction of incompatible visual, audible, or atmospheric elements to a resource's setting.
Replication of aspects of the resource so as to create a false historical appearance.
Elimination or screening of publicly accessible views of the resource.
Construction-related impacts such as falling objects, vibration, dewatering, flooding, subsidence, or collapse.
Introduction of significant new shadows, or significant lengthening of the duration of existing shadows, over an historic landscape or an historic structure to the extent that the architectural details that distinguish that resource as significant are obscured.

Source: Table 8-1 CEQR Technical Manual

The assessment of the potential for impacts on significant resources are described below. Per *CEQR Technical Manual* guidelines, impacts on historic resources are considered on those sites affected by the Proposed Actions and in the area surrounding identified development sites. The historic resources study area is therefore defined as the project site plus an approximately 400-foot radius around the Proposed Action area.

To determine whether the projected development has the potential to affect nearby off-site historic or architectural resources, the study area was screened for historic and architectural resources. No architectural resources were found in the project area that were considered historic or significant.

The LPC was contacted for their initial review of the project's potential to impact nearby historic and cultural resources, and by letter dated May 1, 2020 indicating that the study area contains two sites of buildings of known architectural significance located within the 400-foot radius of the Study Area (see **Appendix A**). **Figure 2.9-1** shows the locations of the identified sites. LPC was consulted on whether or not the sites identified were considered sunlight-sensitive, and LPC responded on July 29, 2020, stating that neither site has sunlight-sensitive features that may be impacted by shadows.

Within the 400-foot Study Area, there is one S/NR eligible property and one LPC eligible property:

- Site 1 (S/NR eligible property), Noguchi Museum and Studio Complex, is located at 9-01 33rd Road (Block 314, Lot 1), 32-55 Vernon Boulevard (Block 314, Lot 7501), and 33-38 10th Street (Block 320, Lot 28). Constructed in 1931, the 39,632 GSF complex is owned by Isamu Noguchi Foundation Inc., which houses The Noguchi Museum and its associated gift shop and courier. Currently, the museum complex includes 27,000 square feet of gallery space, which is spread out over two floors in an old warehouse, as well as a serene sculpture garden adjacent to that building.
- Site 2 (LPC eligible property), Former Barkin, Levin and Company Building, is located at 12-12 33rd Avenue (Block 522, Lot 29). Constructed in 1958, this 47,400 GSF building was originally a factory and offices for a coat manufacturer, Barkin, Levin & Co. It is now occupied by DHL, operating as an illegal nonconforming manufacturing warehouse under the existing R5 zoning district.

Figure 2.9-1: NR and LPC Eligible Sites

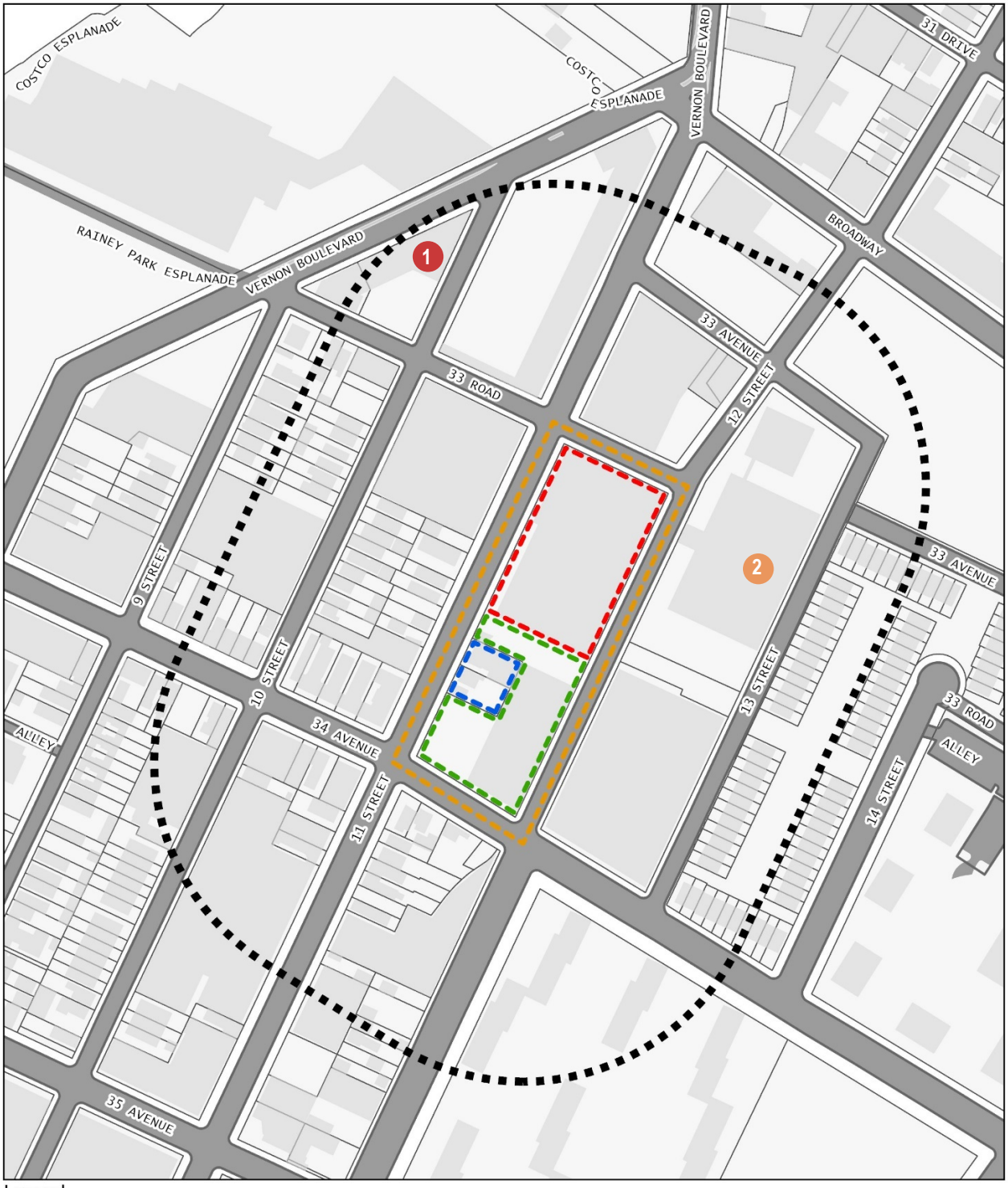

Cultural and Archaeological Resources

Unlike the architectural evaluation of a study area that extends beyond the footprint of a project's block and lot lines, the analysis of potential and/or projected impacts to archaeological resources is controlled by the actual footprint of the limits of soil disturbance. Archeological resources are physical remains, usually subsurface, of the prehistoric and historic periods such as burials, foundations, artifacts, wells and privies. The *CEQR Technical Manual* requires a detailed evaluation of a project's potential effect on the archeological resources if it would potentially result in an in-ground disturbance to an area not previously excavated.

The Proposed Actions would result in new in-ground construction on the Projected Development Sites. As noted, the LPC was contacted for their initial review of the project's potential to impact nearby historic and cultural resources, and a response was received on May 1, 2020 (see **Appendix A**). The LPC has indicated that no cultural resource of archaeological significance is associated with the study area. Therefore, significant adverse impacts to archaeological resources are not expected because of the Proposed Actions, and further analysis is not warranted.

Future No-Action Condition

In the future without the Proposed Actions, existing conditions of the two sites would remain. In the No-Action Scenario, the building complex on Site 1 would still be operating as a place of indoor public assembly and cultural museum given the museum's expansion plan announced in 2019. For the historic building on Site 2, the occupants in the building may change in the No-Action future, but the building itself would not be demolished or altered. There would be no new development on the Projected Development Sites (Block 318 Lots 1, 15, and 22) in the future without the Proposed Actions.

Future With-Action Condition

In the future with the Proposed Actions, it is expected that the existing buildings on Block 318, Lots 1, 15 and 22 would be demolished and redeveloped.

Projected Development Site 1 (Block 318, Lots 15 and 22)

33-33 and 33-51 11th Street would combine to form a 57,138 SF lot that would be developed with a 338,474 GSF (284,331 ZSF; 4.98 FAR) building comprised of 204,831 GSF (194,873 ZSF; 3.40 FAR) of residential use, 90,251 GSF (89,459 ZSF; 1.56 FAR) of commercial use, and 43,392 GSF of cellar level parking. Proposed commercial uses would include 11,955 GSF of local retail stores, 6,552 GSF for an artist's studio, and 71,744 GSF for two trade schools and accessory offices. The building would be 8 stories and 95 feet tall. 100 parking spaces would be provided.

Projected Development Site 2 (Block 318, Lot 1)

33-80 12th Street, a 41,527 SF lot, would be developed with a 248,095 GSF (207,201 ZSF; 4.99 FAR) building comprised of 149,677 GSF (138,318 ZSF; 3.33 FAR) of residential use, 35,988 GSF (34,519 ZSF; 0.83 FAR)

of commercial use, 10,000 GSF (100,000 ZSF; 0.24 FAR) of community facility use, 27,109 GSF (24,364 ZSF; 0.59 FAR) of manufacturing use, and 25,321 GSF of cellar level parking. The ground floor would contain 12,086 GSF of local retail store uses (UG 6) and 27,109 GSF of food distribution warehouse uses (UG 16; no manufacturing on site), the second floor would contain 10,000 GSF of community facility (UG 4) and 23,902 GSF of general office uses, and floors three through nine would contain 149,677 GSF of residential uses. The building would be 8 stories and 95 feet tall. 60 parking spaces would be provided.

Conclusion

The Proposed Actions would not result in any types of visual and contextual impacts to the known historic resources within the Study Area, as all the new buildings that could be developed under the Proposed Actions would be commercial, residential, community facility, or light manufacturing structures of heights and bulk consistent with those urban design features of the area. The Proposed Actions would not introduce any incompatible visual, audible, or atmospheric elements to the settings of historic resources. As discussed in the Urban Design section below (See **Chapter 10**, *Urban Design and Visual Resources*), the proposed building would be designed to be visually compatible and consistent with existing developments, but would not be replicated so as to create a false historical appearance. Additionally, the significant views of the historic architectural resource identified above will not be adversely affected by the Proposed Actions.

The historic resources in the project area include one building complex operating as a place of public assembly and cultural museum and one building operating as DHL Service Point. The Proposed Actions aim to encourage the design of new development that is in character with the area, which is predominately industrial, residential, commercial, community facility, and mixed-use. Publicly accessible views of the resource would not be blocked, because the new development would occur on existing block and lot, and maximum building height would be limited and capped according to the sky exposure plane. In addition, as more fully described in the Shadows section (See **Chapter 8**, *Shadows*), there would be no significant adverse impacts to historic resources with sunlight dependent features. Where resources would be subject to varying amounts of incremental shadow as a result of the Proposed Actions, the increments would not be significant due to their limited extent and other site-specific factors.

Chapter 10: Urban Design and Visual Resources

According to the *CEQR Technical Manual*, urban design is the totality of components that may affect a pedestrian's experience of public space. Elements that play an important role in the pedestrian's experience include streets, buildings and their uses, visual resources, open space, and natural features, as well as wind as it relates to channelization and downwash pressure from tall buildings. Pursuant to the *2020 CEQR Technical Manual*, an assessment of Urban Design may be warranted when a Proposed Action may affect one or more of the elements that contribute to the pedestrian experience of an area, specifically the arrangement, appearance, and functionality of the built environment.

Methodology

Pursuant to the *CEQR Technical Manual*, an assessment of urban design is appropriate when a project may affect one or more of the elements that contribute to the pedestrian experience of the public realm. This assessment of Urban Design and Visual Resources focuses on those elements of the Proposed Action that may have the potential to impact the use, arrangement, appearance, and functionality of the built environment. The *CEQR Technical Manual* defines that a preliminary urban design analysis is appropriate when there is potential for a pedestrian observe a material alteration beyond that allowed by existing zoning. This preliminary analysis provides an assessment of the Proposed Action; to determine when comparing existing and future conditions with and without the Proposed Actions whether the project may result in a significant adverse environmental impact.

The following analysis examines each of those elements that play an important role in the pedestrian experience, including street hierarchy and streetscape (including the arrangement and orientation of streets); building scale as defined by their height and bulk in relation to adjacent built form and arrangement; as well as natural features, open space, and topography. These components are further considered in relation to changes in use and density of use, in so far as it impacts interaction experience of the pedestrian.

This analysis also considers the effects of the Proposed Action on an area's visual resources, or those important public view corridors, vistas, natural or built features. Visual resources can include waterfront views, public parks, landmark structures or districts, or natural features, such as rivers or geologic formations. Based on *CEQR Technical Manual* guidelines, the study area for urban design is the area where the project may influence land use patterns and the built environment. The urban design study area consists of both a primary study area (where urban design effects of the Proposed Actions are direct) and a secondary study area. For the purpose of this assessment, the primary study area is the Affected Area. As with the analysis of land use, zoning, and public policy, the secondary study area for the urban design assessment is defined as the area within approximately 400 feet of the Rezoning Area (see **Figure 2.10-1**). Due to the size of this rezoning, this assessment also considers the context, access and relationship with the broader "neighborhood unit" in which the study area sits

The analysis is based on field visits, aerial views, computerized massing studies and montages, photographs, geographic information systems analysis and other graphic images of the Rezoning Area and surrounding study area. Zoning calculations, including floor area calculations, building heights, and lot coverage

information are also provided. A photo key is provided, identifying locations of primary and secondary study area photos used to document existing conditions is provided in **Figure 2.10-8 through Figure 2.10-11.**

Figure 2.10-1: Primary and Secondary Study Areas



The proposed rezoning of the Affected Area from R5 to M1-5/R6A (MX) would alter permitted use, bulk, and height within the Affected Area. Therefore, further analysis is warranted. The differences between existing and proposed zoning, with regards to those aspects of zoning affecting urban design, are presented in the following **Table 2.10-1**.

Table 2.10-1: No-Action and With-Action Zoning

	No-Action	With-Action
Zoning	R5	M1-5/R6A (MX)
Permitted Uses	Res., CF	Com., Manu., Res., CF
Maximum FAR	Res.: 1.25 CF: 2.00	Com./ Manu.: 5.00 Res.: 3.60 CF: 3.00
Maximum Height	Base Height: 30 feet	Base Height: 75 feet
	Building Height: 40 feet	Building Height: 95 feet (w/QGF)
Lot Coverage (corner lot)	55%	100%

Com. = Commercial; CF = Community Facility; Manu. = Manufacturing; Res. = Residential; QGF = Qualifying Ground Floor

Existing Conditions

Context

The study area (Affected Area) consists of five lots in Block 318 bounded by 11th Street, 12th Street, 33rd Road, and 34th Avenue in the Ravenswood-Astoria neighborhood of Queens, described in detail in **Sections 1.4 and 2.4.** From an urban design perspective, the study area, lies within a smaller, walkable neighborhood unit **(See Figure 2.10-2).** This neighborhood unit is made legible by the arterial roadways (as classified by the NYSDOT) that bound it; Broadway to the North (Minor Arterial), Vernon Blvd to the West (Minor Arterial), 21st Street to the East (Principal Arterial), and 36th Ave/Roosevelt Island Bridge (Minor Arterial) to the South. 11th Street, which runs adjacent to the Proposed Rezoning Area (classified as a Major Collector), provides a local commercial spine through this neighborhood unit, linking the Broadway/Vernon Blvd intersection to 34th Ave (also a Minor Arterial). As illustrated in **Figure 2.10-2**, the 34th Ave and 11th St intersection effectively functions as a neighborhood center, providing access to residents and workers to local transit access (Q104), as well as direct connection from the dense Ravenswood Housing Development and the Queensview Cooperative Housing Complex (shown as **Points 1 & 2** respectively in **Figure 2.10-3: Neighborhood Context Reference Points)** to areas of interest at the East River waterfront such as Rainey Park and Socrates Sculpture Garden **(Points 3 & 4 in Figure 2.10-3)**. In addition, this east-west connection provides access to local residents and workers to the few local retail, cafe and bodega options present on 24th Ave and serves as the central pedestrian axis to the outside edges of the neighborhood unit to 36th Ave, Vernon Blvd, and Broadway for additional transit options and local retail needs.

Figure 2.10-2: Neighborhood Unit Context



Figure 2.10-3: Neighborhood Context Reference Points



Rationalizing the Neighborhood

The primary study area, as well as the 400-foot secondary study area, located in the Ravenswood section of Astoria, is characterized by an eclectic mix of land uses, height and bulk. The overall impression of the Study Area and broader neighborhood context is one that lacks a sense of place, contextual relationship of uses or neighborhood pattern. This impression is the result of the presence of many pre-existing non-conforming industrial and commercial uses set amongst a variety of housing typologies and densities despite their location in an R5 Zone (in existence since the adoption of the 1961 NYC Zoning Code). This section evaluates the characteristics of existing land use, height, bulk and density within the primary and secondary study areas as well as the sidewalks and roadway linking the built form of the neighborhood, the integrated consideration of which establishes the basis for the overall urban design character experienced by the pedestrian.

Primary Study Area

Located at the north end of the block, Projected Development Site 1 (Block 318, Lots 15 & 22) **(Figure 2.10-1)** is owned and controlled by the Applicant. As shown in **Figure 2.10-4**, Lot 15 is developed with a single-story industrial building currently occupied by Lady Linda Cake Company as a bakery warehouse and Central Construction Management as general office space. Lot 22 is also developed with a single-story industrial building currently occupied by Automated Bread Distributing as a wholesale bakery and Control Cargo USA as general office space. Views of the site are provided in photo keys at the end of the existing conditions section, in **Figures 2.10-9 through 2.10-11**.

Figure 2.10-4: Primary Study Area Uses

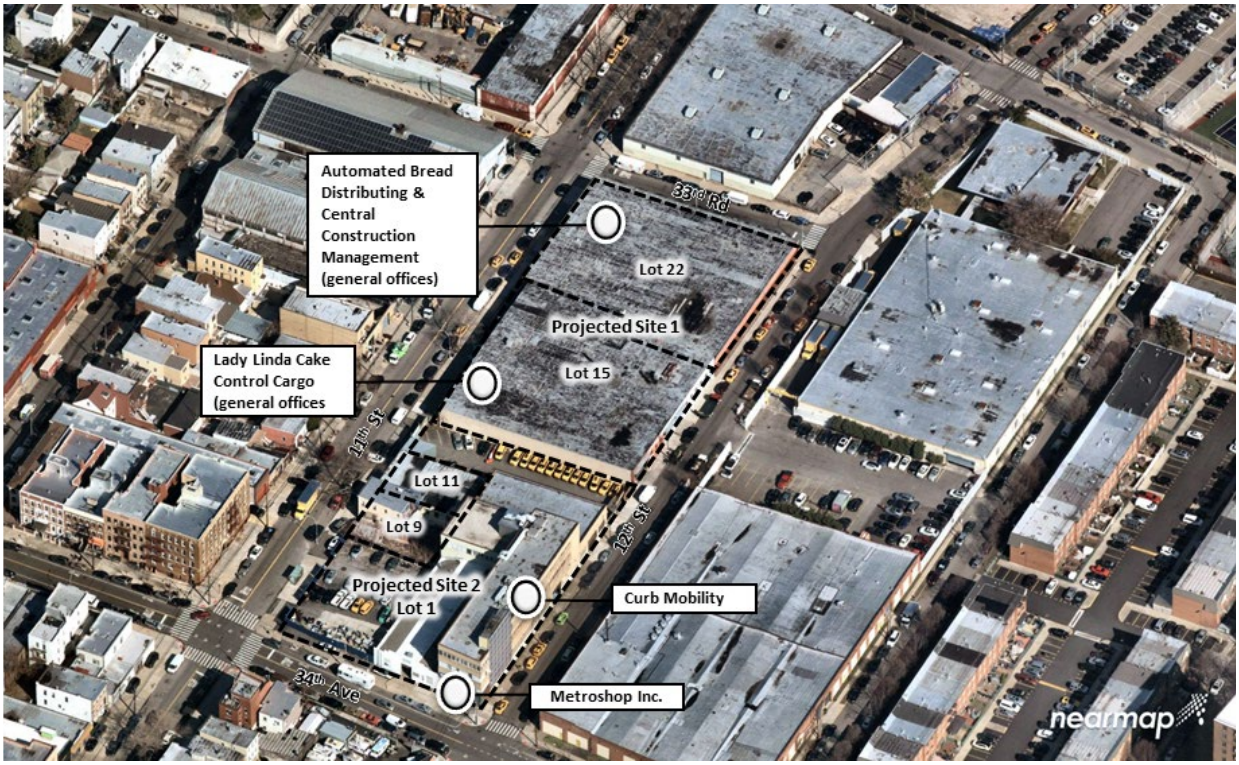

Projected Development Site 2 (Block 318, Lot 1) **(Figure 2.10-1)** is also owned and controlled by the Applicant, which is improved with 3 separate industrial buildings as shown in **Figure 2.10-4**. The tallest building is 3 stories and runs along the eastern portion of the block, which is currently occupied by Curb Mobility LLC as general office space and Metroshop Inc. as an auto repair shop. A 1-story building is located on the interior portion of the lot along 34th Avenue and is also occupied by Curb Mobility LLC. The third building is a 1-story accessory building to a parking lot for employees and work vehicles associated with the other two buildings on Lot 1. Views of the site are provided in photo keys at the end of the existing conditions section, in **Figures 2.10-8 through 2.10-10.**

Other lots within the primary study area are independently owned, where the existing structures include a two-story two-family residential building and an accessory metal shed on Block 318, Lot 9 and a one-story manufacturing building occupied by an auto repair shop on Block 318, Lot 11.

Secondary Study Area

In terms of land use, there is an eclectic of mix residential, commercial, light industrial, community facility uses, and vacant land present within the 400-foot secondary study area and which characterize the broader neighborhood unit generally. The predominant land uses in the secondary study area are light industrial and residential. The lots and buildings housing these uses vary significantly in height and bulk as shown **Figure 2.10-5 & 2.10-6.** Directly abutting the study area on all frontages (see photos in **Figures 2.10-8 through 2.10-11**) are a mix of large lot manufacturing, small scale industrial, warehousing, and commercial uses, along with a few two- and three- family, two-story residential buildings sitting directly across from the Study Area and three- to five- story multi-family buildings present at the southwest corner of the primary study area, at the intersection of 34th Avenue and 11th Street. Significantly taller and more uniformly residential uses are present to the east and southeast of the project site as shown in **Figure 2.10-3**. Further to the east and southeast on the edges of the secondary study area and beyond is a blend of two- and three- family residential dwellings, multi-family dwellings with small and large scale industrial, manufacturing and commercial auto-body type uses.

Generally, residential uses are (intermixed with light industrial and manufacturing uses) present to the west of the study area, which are characterized by 2- to 4-story brick buildings, used as two- and three-family dwelling buildings and multi-family walk-up buildings, which typically are located midblock along 9th, 10th, and 11th Streets. As noted earlier, a large NYCHA development called Ravenswood Houses is located at the southeast corner of the secondary study area **(Point 1** - **Figure 2.10-3)**, which takes up nearly four blocks with 31 six- and seven-story elevator residential buildings. A planned residential development located one block north between 13th and 14th Streets and partially within the secondary study area is composed of 170 semi-attached, three- story two-family town houses **(Point 3** - **Figure 2.10-3)**,

As with the primary study area, Industrial uses within the secondary study area also vary in size and intensity with a range of uses, including a variety of small scale auto-body and auto-repair facilities, warehouses (including a large DHL warehouse adjacent to the study area on 12th Street)**(Point 4**- **Figure 2.10-3)**, bakery wholesalers, maintenance and construction wholesalers, and media studios.

Other notable uses in the surrounding area include Long Island City High School to the northeast **(Point 5** - **Figure 2.10-3)** and The Noguchi Museum **(Point 6** - **Figure 2.10-3)**, Socrates Sculpture Park **(Point 7** - **Figure 2.10-3)**, Costco **(Point 8** - **Figure 2.10-3)**, and Rainey Park to the northwest **(Point 4** - **Figure 2.10-3)**.

Bulk and Height

Within the secondary study area, built FARs vary depending on use: one- and two-family homes range from approximately .65 to 1.00; multi-family buildings range from .43 to 3.11 (see **Figure 2.10-7: Built FAR - Secondary Study Area)** with a majority built to at least 2.00 FAR; and industrial uses, which constitute a majority of the land use in the area, are typically built to around 1.00 FAR. Buildings in the area typically range from 1 to 4 stories in height, with several multi-family buildings reaching 4-stories in height (see **Figure 2.10-6: Building Heights - Secondary Study Area)**. However, as visualized in **Figure 2.10-5,** the southeastern backdrop of the secondary study area contains buildings that are of similar height and significantly taller than the Proposed Development Sites under the Future With-Action Scenario. Notably and partially within the secondary study area is the 6- and 7-story NYCHA Ravenswood Houses **(Point 1** - **Figure 2.10-3)**, that includes 6 separate buildings that would be roughly comparable in height to the development that would be induced by the Proposed Actions. Further, the largest development in the area in terms of height, approximately 500 feet to the southeast of the primary study area is North Queensview Homes located on Block 528, Lot 50, which consists of 7 separate buildings reaching 14 stories in height.

To the north of the secondary study area, there are several developments of similar height and bulk to the Future With-Action Scenario, including 8-story residential development at 11-15 Broadway Vernon Blvd (Block 502 Lot 41) (see **Point 9 – Figure 2.10-3**) and the 20-story residential building at 11-24 31 Ave (Block 302 Lot 7502) (see **Point 10 – Figure 2.10-3).** Finally, to the west of the secondary study area, a multi-family development on Block 322, Lot 112, features similar bulk and far greater height at 17-stories and 394,803 GSF and a 4.53 FAR (see **Point 11 – Figure 2.10-3**).

Lot coverage also varies by use, with one- and two-family homes built at approximately 50 percent lot coverage and with small (5 to 10 feet) front yard setbacks. Multi-family buildings in the area have larger bulk and are generally built with approximately 80 percent lot coverage, while still providing front yard setbacks. Industrial uses are mostly built out to their lot lines with no setbacks and are interspersed throughout the secondary study area.

Access

The traffic grid to the north of the Project Site is irregular at the confluence of Vernon Boulevard and Broadway. The study area sits at the intersection of major thoroughfares including 34th Avenue as minor arterial, 11th Street as major collector. As noted above, neighborhood unit in which the secondary study area sits is bounded includes arterial roadways including Vernon Blvd to the west, Broadway to the north, 21st St to the east, and 36th St to the south. Vehicular traffic derived from both the study area and the industrial/manufacturing activity associated with smaller industrial/manufacturing uses to the west, as well as DHL activities (Block 522, Lot 29) adjacent to the primary study, contribute to the presence of automobiles

and trucks on area sidewalks and generally inhibit the quality of life generally associated with the residential zone in which both the primary and secondary study areas sit. Sidewalks, ranging from 15 feet to 20 feet wide, are in good condition with paved surface and regular street lights throughout the study area except that the limited number of street trees need to be improved. All the intersections are under good control with clear crossing markings and stop signs, securing the safety of the pedestrians when across the streets. Pedestrian activity is limited because of the industrial nature of the area, and lack of ground floor local retail. Further, the presence of trucks and vehicles staged on the sidewalk and idling curbside reduces the overall functionality and neighborhood character as experienced by the pedestrian.

Visual Resources

There are two potential visual resources in the secondary study area **(**see **Exhibit 2.10-1**).: the S/NR eligible one-story office located at 12-12 33rd Avenue which was the former site of the Barkin, Levin and Company Building **(**see **Point 4 – Figure 2.10-3)**; and the LPC eligible Noguchi Museum and Studio Complex located at the intersection of 9-01 33rd Road, 32-55 Vernon Avenue, and 33-38 10th Street **(**see **Figure 2.9-1: NR and LPC Eligible Sites) (**see **Point 6 – Figure 2.10-3).** The Noguchi Museum and Studio Complex is not visible from the Affected Area, and proposed development within the study area would not block the visual resource or alter the context of the building. The Barkin, Levin and Company Building, constructed in 1958 is an example of mid-century modernist design and currently serves as offices for DHL. The site is located as shown below is approximately 150 feet from the corner of Projected Development Site 1 at intersection of 12th St with 33rd. The main access to the low-slung one-story building, featuring its distinctive design characteristics including cantilever roof which was design to shade the paneled glass façade, faces 33rd Ave, while only the rear of the building is visible to the study area. The Projected Development Sites' buildings would not alter the street scape adversely and would not physically impact the site in any way. As the rear of the building offers no views to the study area either from within or outside on its rear lawn, the Proposed Development would not impact the siting characteristics of structure.

Exhibit 2.10-1



Figure 2.10-5: Height and Bulk Visualization – Existing Condition

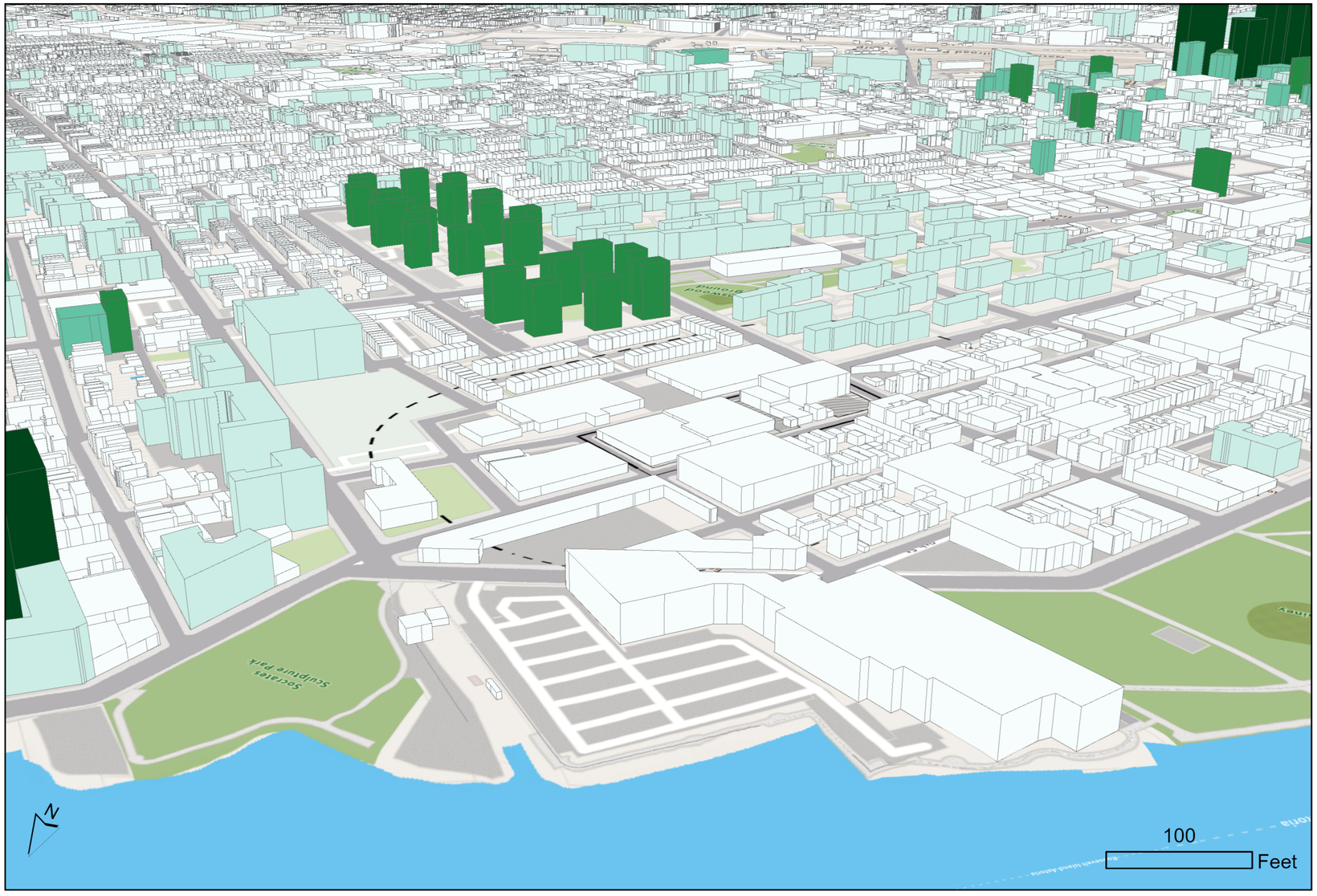

Rezoning Area (Primary Study Area)

Projected Development Site

400-Foot Radius (Secondary Study Area)

Building Height (Number of Floors)

0 - 4 Stories

4 - 8 Stories

8 - 12 Stories

12 - 16 Stories

Over 16 Stories

Figure 2.10-6: Building Heights - Secondary Study Area



Figure 2.10-7: Built FAR – Secondary Study Area

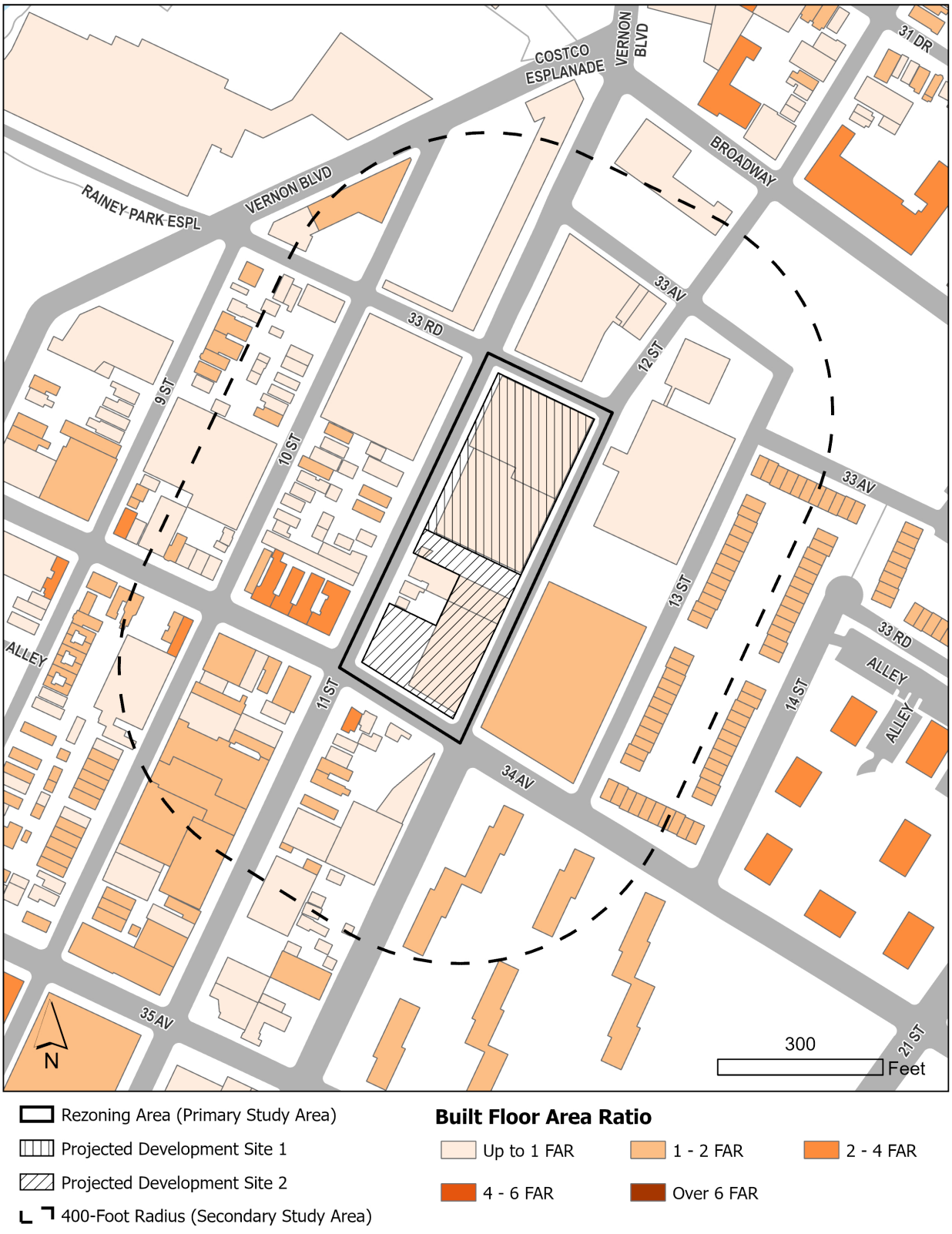

Figure 2.10-8: Pedestrian Views Along the 34th Ave Corridor











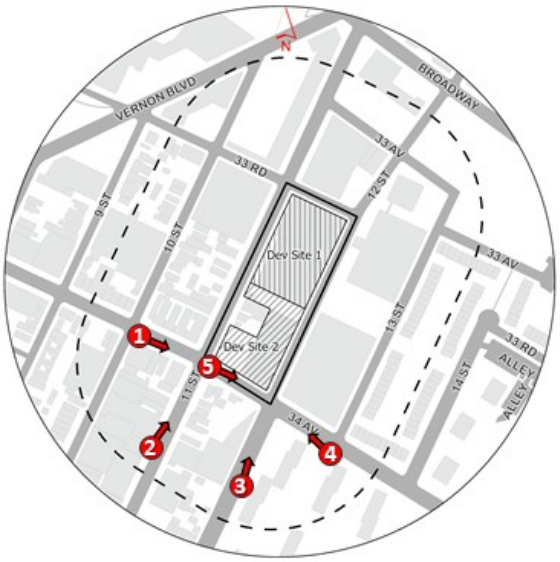

Figure 2.10-9: Pedestrian Views Along the 11th Street Corridor











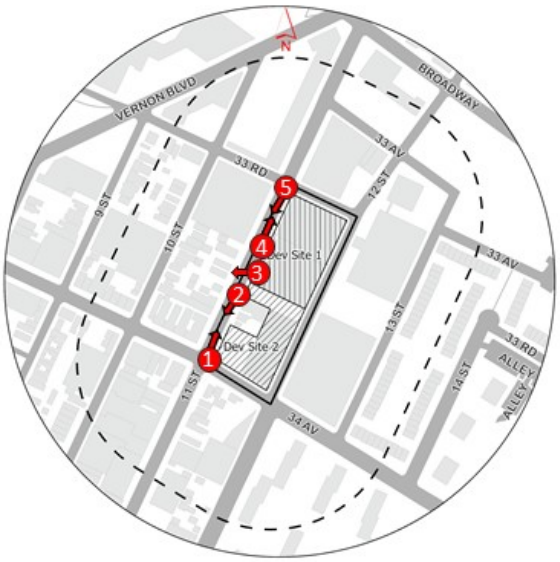

Figure 2.10-10: Pedestrian Views Along the 34th Ave Corridor











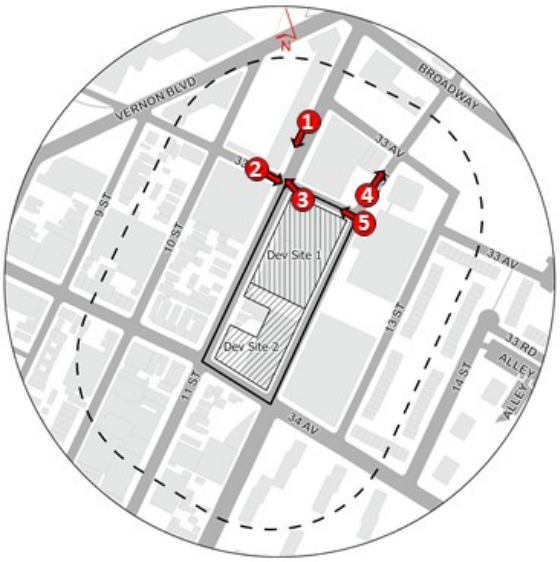

Figure 2.10-11: Pedestrian Views Along the 12th St Corridor



Future No-Action Condition

In the future without the Proposed Actions, it is expected that while tenants within the residential, manufacturing, retail, and office buildings may change, the overall use of these buildings within the study area would remain the same. Any physical changes to buildings in the study area would comply with designated zoning regulations and other surrounding districts. No significant changes to the area's urban character are anticipated. No changes to the area's views to the adjacent parks and open spaces are expected.

R7X/C1-3 and R6B districts were recently mapped (September 11, 2019 - C100421ZMQ, N190151ZRQ, and C19038ZSQ) northwest of the study area across 11th Street and 33rd Road. The newly established R7X/C1-3 district to the north of the Affected Area allows a FAR of 6.0 and building heights of 145 feet. The environmental assessment for the site (12DCP139Q) assumed 261 residential units and 16,692 sf of commercial space to be built by 2023. **Figure 2.10-12** shows the Projected Development effectuated by this approved rezoning in the Future No-Action Scenario.

Future With-Action Condition

Projected Development Site 1 (Block 318, Lots 15 and 22) would be improved with an 8-story 95-foot-tall mixed commercial and residential building of 338,474 GSF (284,331 ZSF; 4.98 FAR), including 204,831 GSF (194,873 ZSF; 3.40 FAR) of residential use, 90,251 GSF (89,459 ZSF; 1.56 FAR) of commercial use, and 43,392 GSF of cellar level parking. The building would contain 229 dwelling units, 46 of which would be permanently set aside as affordable. Proposed commercial uses would include 11,955 GSF of local retail stores (UG 6), 6,552 GSF for an artist's studio (UG 9), and 71,744 GSF for two trade schools and accessory offices (UG 9). 100 parking spaces would be required for the residential uses, and all spaces would be provided in the 43,392 GSF enclosed garage at cellar level accessible by a curb cut on 12th Street. The proposed building has a height of 95 feet after a 15-foot setback above the base height of 75 feet. The development would wrap the block, maintaining a continuous street wall on each frontage.

Projected Development Site 2 (Block 318, Lot 1) would be an 8-story, 95-foot-tall mixed-use commercial, community facility, industrial/manufacturing, and residential building with 163 dwelling units, 33 of which would be permanently affordable. The building would contain 248,095 GSF (207,201 ZSF; 4.99 FAR), including 149,677 GSF (138,318 ZSF; 3.33 FAR) of residential use, 35,988 GSF (34,519 ZSF; 0.83 FAR) of commercial use, 10,000 GSF (100,000 ZSF; 0.24 FAR) of community facility use, 27,109 GSF (24,364 ZSF; 0.59 FAR) of manufacturing use, and 25,321 GSF of cellar level parking. The ground floor would contain 12,086 GSF of local retail store uses (UG 6) and 27,109 GSF of food distribution warehouse uses (UG 16; no manufacturing on site), the second floor would contain 10,000 GSF of community facility (UG 4) and 23,902 GSF of general office uses, and floors three through nine would contain 149,677 GSF of residential uses. 60 residential accessory parking spaces would be required, and 60 would be provided at cellar level accessible from a curb cut on 11th Street.

A comparison of **Figure 2.10-12** and **Figure 2-10-13** show the interaction of massing between the Future No-Action Condition with the approved Vernon Boulevard – Broadway Rezoning and Future With-Action

Condition illustrating Projected Development Sites 1 & 2. F**igure 2.10-14** through **Figure 2.10-19** show a comparison of the pedestrian experience of massing in the Future No-Action and the Future With-Action. The Proposed Actions would introduce developments that are larger in scale than the development immediately adjacent to the study area but are of similar height to the large complex of residential structures to the east and in character with the height and bulk of development along the Broadway corridor to the north and Vernon Blvd to the west. The proposed developments would be consistent in scale to the eight-story residential buildings developed along Broadway. The proposed M1-5/R6A (MX) zoning district has comparable bulk provisions to the existing R7X/C1-3 and R6B districts mapped northwest of the Project Area across 11th Street and 33rd Road as illustrated in **Figure 2.10-13**. However, the R7X/C1-3 district allows a higher FAR of 6.0 and greater building height of 145 feet. The proposed M1-5/R6A (MX) zoning district is also consistent with City policy to position higher density developments near transit along wide streets that can support such development.

As discussed above, the proposed buildings would rise to a height of 95 feet. Along 11th Street, a wide road, there would be a 10-foot setback with a 55-foot-tall base height before rising to the maximum height of 95 feet. Industrial uses which predominate the area are typically built out to their lot lines and rise without a setback, which would be similar to the proposed building development, thereby creating a continuous streetwall and supplementing an enhancing an existing disjointed and decayed streetscape in the area.

The proposed development, with ground floor commercial uses, currently improved with manufacturing buildings and parking facilities, would significantly improve the pedestrian experience by reducing a large amount of incompatible industrial and manufacturing uses that clog sidewalks with heavy duty trucks and delivery vans while providing local serving retail and community facility uses that would activate the street and provide uses that are in great demand in what amounts to a local retail and food desert. The Proposed Actions are consistent with existing land uses within the surrounding area and promote new mixed-use development on a suitable, underutilized and incompatible property within this R5 neighborhood. Ultimately, the Proposed Actions can establish the context for creating a neighborhood supportive center that provides a legibility to a currently disordered neighborhood and a mix of land uses that can unify the broader residential and manufacturing uses present in this section of the Ravenswood neighborhood of Astoria.

Conclusion

The development facilitated by the Proposed Actions would not adversely impact any of the constituent urban design elements or impact the overall character of the neighborhood. It would not significantly change the pedestrian experience, nor would it disturb the vitality, walkability, or the visual character of the area. The development with ground floor commercial uses would improve walkability and the visual character of the area, and would also provide needed local serving retail uses. Therefore, the Proposed Actions would not result in any significant adverse impact to the constituent elements of Urban Design, and a detailed analysis is not warranted.

Figure 2.10-12: Birdseye of the Future No-Action Scenario

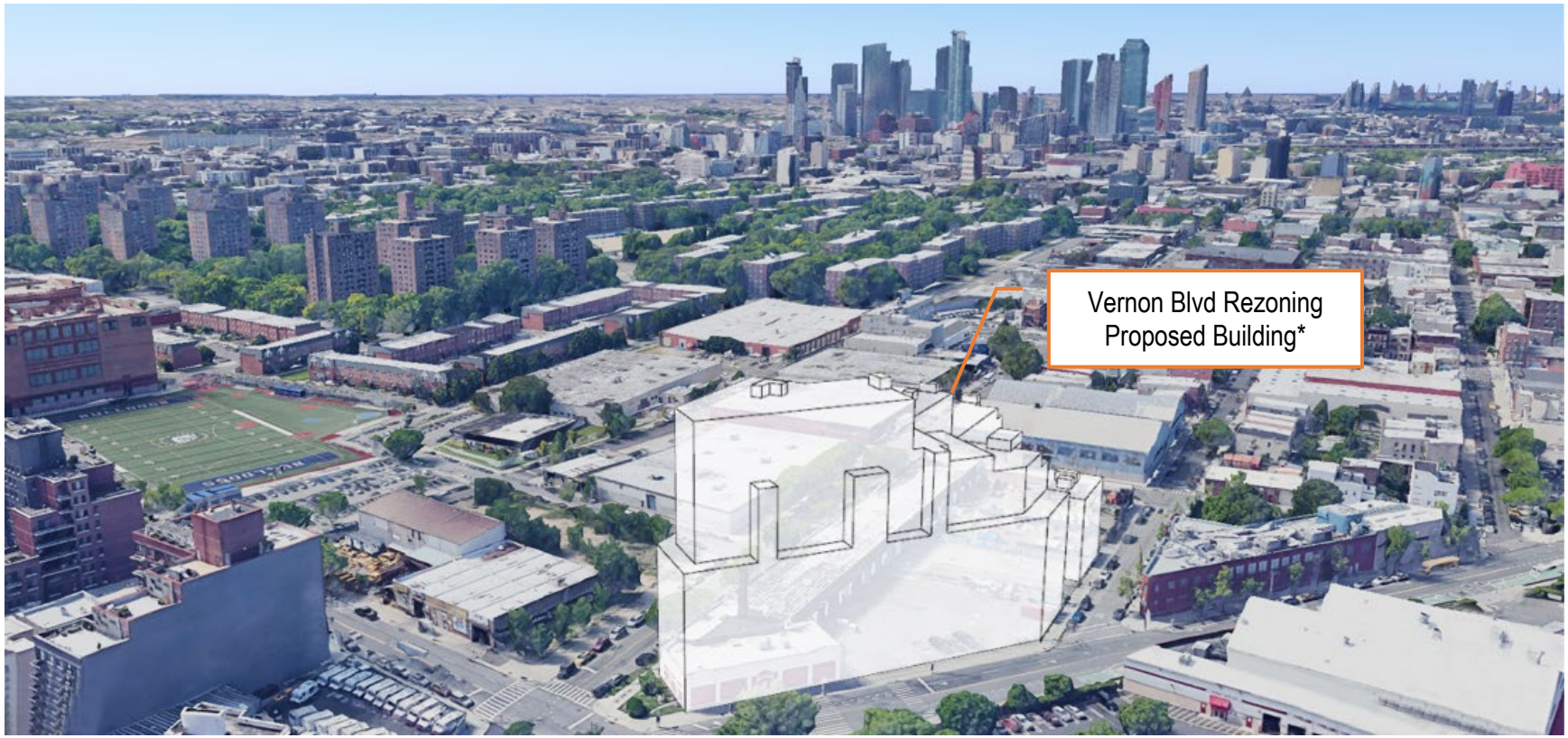

* The Vernon Blvd Rezoning would develop the property with one 5-story 55-foot-tall residential structure (45' base height), one 9- story 95-foot-tall residential structure (65' base height), and one 14-story 145-foot-tall mixed-use residential and commercial building (65' base height).

Figure 2.10-13: Birdseye of the With-Action Scenario



Figure 2.10-14: Photokey of Photomontage Viewpoints



Figure 2.10-15: View #1 – From 34th Street Looking East Toward Project Site
No Action and With Action Photomontage Comparison



No-Action View on 34th Street from Ravenswood Houses



With-Action View on 34th Street from Ravenswood Houses

Figure 2.10-16: View #2 – From 12th Street Looking North Toward Project Site
No Action and With Action Photomontage Comparison



No-Action View on 12th Street from Ravenswood Houses



With-Action View on 12th Street from Ravenswood Houses

Figure 2.10-17: View #3 – From 34th Street and 10th Looking West Toward Project Site
No Action and With Action Photomontage Comparison



No-Action View on 34th Street from Ravenswood Houses



With-Action View on 12th Street from Ravenswood Houses

Figure 2.10-18: View 4 – From 11th Street and 33rd Rd Looking South Toward Project Site
No Action and With Action Photomontage Comparison



No-Action View on 12th Street from Ravenswood Houses



With-Action View on 12th Street from Ravenswood Houses

Figure 2.10-19: View #5 – From 12th Street and 33rd Rd Looking South Toward Project Site
No Action and With Action Photomontage Comparison



No-Action View on 12th Street from Ravenswood Houses



With-Action View on 12th Street from Ravenswood Houses

Chapter 12: Hazardous Materials

According to the *CEQR Technical Manual*, the potential for significant impacts from hazardous materials can occur when: (a) hazardous material exists on a site, and (b) an action would increase pathways to their exposure, or (c) an action would introduce new activities or processes using hazardous materials.

Methodology

The hazardous materials assessment begins with a Phase 1 ESA, which is a qualitative evaluation of the environmental conditions present at a site, based on a review of available information, site observations, and interviews. Pursuant to the *2020 CEQR Technical Manual*, the Phase 1 ESA is conducted in accordance with the standards established by the current ASTM Phase 1 ESA Standard and includes research and field observations to determine whether the site may contain contamination from either past or present activities on the site or as a result of activities on adjacent or nearby properties. If a potential REC is identified during this assessment, then building any subsurface investigations are usually conducted as part of a Phase II ESA to confirm the presence and extent of the contamination.

Analysis

The proposed rezoning would allow for residential, commercial, community facility, and manufacturing uses to be built with a higher FAR in the proposed M1-5/R6A (MX) districts. Accordingly, a Phase I Environmental Site Assessment (ESA) was conducted for the Projected Development Sites by Equity Environmental Engineering (EEE) on November 19, 2019. A copy of this report is included as an Attachment. NYC DEP reviewed the Phase I in October 2020 and sent a letter approving the work and recommending an E-Designation.

The purpose of a Phase I ESA is to determine whether any type of environmental hazard exists within or adjacent to the project site. Environmental hazards may include, but are not be limited to, hazardous/toxic wastes or raw chemicals stored, dumped, or spilled on the site, underground and above ground storage of petroleum or hazardous materials; asbestos within the building materials/structures; and identification of potential off-site sources of hazardous waste contamination, such as industrial facilities adjacent to the subject property.

Recognized Environmental Conditions (RECs) are defined as the presence or likely presence of any hazardous substances or petroleum products under conditions that indicate an existing release, past release, or a material threat of a release into structures on the property or into the ground, groundwater or surface waters of the property. De minimis RECs are those that do not present a threat to health or the environment and would not be the subject of an enforcement action by a government agency. All RECs, excluding de minimis RECs, were considered in the Phase I.

EEE has performed a Phase I Environmental Site Assessment in conformance with the scope and limitations of ASTM Practice E 1527-13. The following conditions were observed:

- RECs: There are no known RECs associated with the Subject Properties on Projected Development Site 1 (Block 318, Lots 15 and 22). Based on the lack of site reconnaissance on Projected Development Site 2 (Block 318, Lot 1), further investigation is required.
- HRECs: There are no known HRECs associated with the Subject Properties on Projected Development Site 1 (Block 318, Lots 15 and 22). Based on the lack of site reconnaissance on Projected Development Site 2 (Block 318, Lot 1), further investigation is required.
- CRECs: There are no CRECs associated with the Subject Properties.
- VECs: Based on the past and current uses of the Subject Properties and the properties in close proximity, there is a potential for a Vapor Encroachment Condition (VEC) on two Projected Development Sites (Block 318, Lots 1, 15, and 22).

Conclusion

Based on the findings of the Phase 1 ESA, RECs, HRECs and VECs were identified related to the Subject Properties. Therefore, the development of the Projected and Potential Development Sites under the Proposed Actions may have the potential for adverse impacts related to hazardous materials. The Applicant-Owned lots are currently improved with structures that are fully tenanted with active businesses. A Phase II ESA would require demolition of the structures on The Applicant sites, and so would not be possible until construction activities began. Therefore, an E-Designation (E-661) will be mapped on the Projected and Potential Development Sites within the Affected Area. The E-Designation language related to Hazardous Materials is as follows:

E-Designation (E-661)

Block 318 Lots 1 (Projected Development Site 1), Lots 15 and 22 (Projected Development Site 2), and Lots 9 and 11 (Potential Development Site 1)

An E-Designation should be placed on the site to assure that testing and mitigation will be performed, as necessary, before any future development and/or soil disturbance. Further hazardous materials assessments should be coordinated through the Mayor's Office of Environmental Remediation (OER).,

Task 1-Sampling Protocol

The Applicant submits to OER, for review and approval, a Phase I of the site along with a soil, groundwater and soil vapor testing protocol, including a description of methods and a site map with all sampling locations clearly and precisely represented. If site sampling is necessary, no sampling should begin until written approval of a protocol is received from OER. The number and location of samples should be selected to adequately characterize the site, specific sources of suspected contamination (i.e., petroleum-based contamination and non-petroleum-based contamination), and the remainder of the site's condition. The characterization should be complete enough to determine what remediation strategy (if any) is necessary after review of sampling data. Guidelines and criteria for selecting sampling locations and collecting samples are provided by OER upon request.

Task 2-Remediation Determination and Protocol

A written report with findings and a summary of the data must be submitted to OER after completion of the testing phase and laboratory analysis for review and approval. After receiving such results, a determination is made by OER if the results indicate that remediation is necessary. If OER determines that no remediation is necessary, written notice shall be given by OER.

If remediation is indicated from test results, a proposed remediation plan must be submitted to OER for review and approval. The applicant must complete such remediation as determined necessary by OER. The Applicant should then provide proper documentation that the work has been satisfactorily completed.

A construction-related health and safety plan should be submitted to OER and would be implemented during excavation and construction activities to protect workers and the community from potentially significant adverse impacts associated with contaminated soil, groundwater and/or soil vapor. This plan would be submitted to OER prior to implementation.

With this (E) designation in place, no significant adverse impacts related to hazardous materials are expected, and no further analysis is warranted.

Chapter 16: Transportation

Pursuant to *CEQR Technical Manual* methodology, a transportation assessment may be necessary when a proposed action would alter the transportation network by closing, opening, or realigning an element of the transportation system such as a roadway, pedestrian way, or transit route, or if it would generate new trips on the transportation network. The objective of the transportation analyses is to determine whether a proposed project may have a potential significant impact on traffic operations and mobility, public transportation facilities and services, pedestrian elements and flow, safety of all roadway users (pedestrians, bicyclists and vehicles), on- and off-street parking, or goods movement.

Methodology

The *CEQR Technical Manual* states that a preliminary trip generation assessment should be prepared to determine whether a quantified analysis of any technical areas of the transportation system is necessary. Except in unusual circumstances, a further quantified analysis would typically not be needed for a technical area if the proposed development would result in fewer than the following increments:

- 50 peak hour vehicle trips;
- 200 peak hour subway/rail or bus transit riders (or 50 bus trips in a single direction on a single route during a peak hour);
- 50 CWFS Ferry Trips; or
- 200 peak hour pedestrian trips.

The *CEQR Technical Manual* also states that if the threshold for traffic is surpassed, a parking assessment may also be warranted. This chapter assesses the potential for project-generated vehicle, transit, and pedestrian trips to affect the local transportation network, as well as an assessment of transportation safety in the study area.

Future No-Action Conditions

As described above in **Section 1.1.6**, the current occupants of the Proposed Development Site are a mix of light industrial, auto repair, wholesale food distribution, parcel delivery and associated office space. Site 1 is currently a wholesale food distribution facility. On Site 2, historically the occupants of the various lots on the site have been transitory. As such, for the purposes of trip generation and transportation analysis, the Existing and Future No-Action Conditions are considered to be "Light Industrial" (with the exception of the wholesale food distribution use present on Projected Development Site).

Future With-Action Conditions

The incremental change in land use for Sites 1 and 2 from the Future No-Action Condition to the Future With-Action Condition are detailed below in **Table 2.16-1**.

Table 2.16-1: Increment Summary Table[6]

Site	Land Use	Existing		No-Action		With-Action		Increment	
		gsf	DU	gsf	DU	gsf	DU	gsf	DU
Site 1	Local Retail (UG 6)	0		0		11,955		11,955	
	Residential (UG 2)		0		0		229		229
	Food Distributor (UG 16)	55,175		55,175				-55,175	
	Trade School--Construction (UG 9)	0		0		22,169		22,169	
	Trade School--Movie Studio (UG 9)	0		0		10,406		10,406	
	Art Studio (UG 9)	0		0		6,552		6,552	
	Professional Offices (UG 9)	0		0		39,169		39,169	
	Community Facility	0		0		0		0	
	Light Industrial	0		0		0		0	
Site 2	Local Retail (UG 6)	0		0		12,086		12,086	
	Residential (UG 2)		0		0		163		163
	Food Distributor (UG 16)	0		0		27,109		27,109	
	Trade School--Construction (UG 9)	0		0		0		0	
	Trade School--Movie Studio (UG 9)	0		0		0		0	
	Art Studio (UG 9)	0		0		0		0	
	Professional Offices (UG 9)	0		0		23,902		23,902	
	Community Facility	0		0		10,000		10,000	
	Light Industrial	39,500		39,500		0		-39,500	
Total	Local Retail (UG 6)	0		0		24,041		24,041	
	Residential (UG 2)		0		0		392		392
	Food Distributor (UG 16)	55,175		55,175		27,109		-28,066	
	Trade School--Construction (UG 9)	0		0		22,169		22,169	
	Trade School--Movie Studio (UG 9)	0		0		10,406		10,406	
	Art Studio (UG 9)	0		0		6,552		6,552	
	Professional Offices (UG 9)	0		0		63,071		63,071	
	Community Facility	0		0		10,000		10,000	
	Light Industrial	39,500		39,500		0		-39,500	

[6] While both a Construction and Movie Studio trade school are analyzed as part of the Proposed Development the client has confirmed that only a Construction trade school will be built.

Preliminary Assessment

Based on the Affected Area's location, it is within Traffic Zone 2. According to Table 13-1 of the 2021 CEQR Technical Manual. In this zone, a residential development of fewer than 200 residential units, 15,000 square feet of local retail, or 25,000 square feet of community facility space typically does not warrant further assessment of the potential for adverse effects on Transportation. Incremental development under the Proposed Actions, compared to No-Action conditions, would consist of 392 more residential dwelling units, an increase of 24,041 GSF of local retail space, and 10,000 GSF of community facility space. Therefore, a Tier 1 trip generation is required.

Transportation Planning Assumptions

Transportation Planning Assumptions used to derive trip generation characteristics for the Future No-Action and Future With Action Condition were derived from the following sources: 2021 CEQR TM, Downtown Jamaica Redevelopment Plan FEIS, Steiner Studios Media Campus FEIS, SoHo-No-Ho Neighborhood Plan EIS, Dutch Kills Rezoning FEIS, ACME Fish FEIS, East New York FEIS, 2015 – 2019 ACS, Astoria 31st Street Rezoning EAS, local retail data provided by NYCDOT, 2012 – 2016 CTPP RJTW, data provided by Andromeda Community Initiative for projected enrollment and building utilization, Astoria Cove FEIS, and data provided by NYC DCP EARD. **Table 2.16-2** shows the assumptions of the travel factors based on the listed data sources. **Table 2.16-3** shows the person trips, vehicular trips, and pedestrian trips generated based on the trip factors in **Table 2.16-2**.

Table 2.16-2: Transportation Demand Factors

	Local Retail		Residential		Food Distributor		Trade School - Construction (client provided)		Trade School - Movie Studio (Academic University)		Art Studio		Professional Offices		Community Facility		Light Industrial	
Trip Generation	(1)		(1)		(14)		(12)		(1)		(4)		(1)		(14)		(7)	
Weekday	205		8.075		0.37	AM	Client provided data for enrollment		26.6		40.24		18		51.6		14.7	
Saturday	240		9.6		0.44	MD/PM/SAT			13.5		40.24		3.90		50.4		2.2	
	per 1,000 sf		per DU		peak hour per 1,000 sf		per 1,000 sf		per 1,000 sf		per 1,000 sf		per 1,000 sf		per 1,000 sf		per 1,000 sf	
Linked-trip	25%																	
Temporal Distribution	(1)		(1)		(14)		(12)		(1)		(4)		(1)		(14)		(7)	
AM	3.00%		10.00%						16.00%		0.60%		12.00%		9.00%		13.20%	
MD	19.00%		5.00%		Trip Generation is for Peak Hours		Client provided data for enrollment		8.00%		11.50%		15.00%		7.00%		11.00%	
PM	10.00%		11.00%						26.00%		10.30%		14.00%		9.00%		14.20%	
Sat MD	10.00%		8.00%						16.00%		11.50%		17.00%		13.00%		10.70%	
Modal Splits	(10)		(8)		AM/PM/Sat (11)	MD (11)	AM/PM/Sat (11)	MD (11)	AM/PM/Sat (11)	MD (11)	(4)		AM/PM/Sat (11)	MD (11)	(7)		AM/PM/Sat (11)	MD (11)
Auto	11.00%		16.50%		44.20%	44.20%	44.20%	44.20%	44.20%	44.20%	15.00%		44.20%	44.20%	5.00%		44.20%	44.20%
Taxi	0.00%		1.13%		0.76%	0.76%	0.76%	0.76%	0.76%	0.76%	0.00%		0.76%	0.76%	1.00%		0.76%	0.76%
Bus	3.00%		7.41%		7.89%	7.89%	7.89%	7.89%	7.89%	7.89%	15.00%		7.89%	7.89%	6.00%		7.89%	7.89%
Subway	4.00%		61.47%		37.31%	37.31%	37.31%	37.31%	37.31%	37.31%	30.00%		37.31%	37.31%	3.00%		37.31%	37.31%
Walk/Other	82.00%		13.49%		9.85%	9.85%	9.85%	9.85%	9.85%	9.85%	40.00%		9.85%	9.85%	85.00%		9.85%	9.85%
In/Out Splits	In (7)	Out (7)	In (7)	Out (7)	In (14)	Out (14)	In (12)	Out (12)	In (15)	Out (15)	In (4)	Out (4)	In (5)	Out (5)	In (14)	Out (14)	In (7)	Out (7)
AM	50%	50%	15%	85%	58%	42%	100%	0%	100%	0%	100%	0%	96%	4%	57%	43%	88%	12%
MD	50%	50%	50%	50%	19%	81%	50%	50%	0%	0%	71%	29%	39%	61%	57%	43%	50%	50%
PM	50%	50%	70%	30%	19%	81%	0%	100%	0%	100%	24%	76%	5%	95%	52%	48%	12%	88%
Sat MD	55%	45%	50%	50%	19%	81%	0%	0%	50%	50%	71%	29%	60%	40%	45%	55%	47%	53%
Vehicle Occupancy	(10)		(8), (13)		(6)		(2)		(3)		(4)		(11)(9)		(7)		(7)	
Auto	1.40		1.12		1.11		1.50		1.30		2.70		1.14		1.65		1.14	
Taxi	1.40		1.40		1.11		1.50		1.30		3.70		1.42		1.30		1.14	
Truck Trip Generation	(1)		(1)		(14)		(2)		(3)		(4)		(1)		(7)		(7)	
Weekday	0.35		0.06		0.60	AM	0.29		0.32		0.29		0.32		0.29		0.67	
Saturday	0.04		0.02		0.37	MD/PM/SAT	0.29		0.32		0.29		0.01		0.29		0.67	
Temporal Distribution	(1)		(1)		(14)		(2)		(3)		(4)		(1)		(7)		(7)	
AM	8.00%		12.00%				9.60%		10.00%		10.00%		9.60%		9.60%		14.00%	
MD	11.00%		9.00%		Trip Generation is for Peak Hours		11.00%		11.00%		11.00%		11.00%		11.00%		9.00%	
PM	2.00%		2.00%				1.00%		2.00%		2.00%		2.00%		1.00%		1.00%	
Saturday	11.00%		9.00%				0.00%		11.00%		0.00%		0.00%		0.00%		0.00%	
In/Out Splits	In (1)	Out (1)	In (1)	Out (1)	In (14)	Out (14)	In (2)	Out (2)	In (3)	Out (3)	In (4)	Out (4)	In (1)	Out (1)	In (7)	Out (7)	In (1)	Out (1)
AM (Food Distributor)					12%	88%												
AM/MD/PM/Sat	50.00%	50.00%	50.00%	50.00%	76.00%	24.00%	50.00%	50.00%	50.00%	50.00%	50.00%	50.00%	50.00%	50.00%	50.00%	50.00%	50.00%	50.00%

1 = CEQR TM
2 = Downtown Jamaica Redevelopment Plan FEIS
3 = Steiner Studios Media Campus FEIS
4 = SoHo-NoHo Neighborhood Plan EIS
5 = Dutch Kills Rezoning FEIS
6 = ACME Fish FEIS
7 = East New York EIS
8 = 2015-2019 American Community Survey (ACS)-Census Tract #'s 25, 33, 37, 39, 43, 45, and 85 Queens, NY
9 = Astoria 31st Street Rezoning EAS
10 = Based on NYCDOT survey data
11 = CTPP RJTW 2012 - 2016 Data Census Tract #'s 25, 33, 37, 39, 43, 45, and 85 Queens, NY
12 = Client provided data for enrollment
13 = Astoria Cove FEIS
14 = Based on data provided by NYC DCP EARD
15 = Based on guidance from NYC DCP EARD to use academic directional distribution

Table 2.16-3: Total Project Generated Trips

	Local Retail		Residential		Food Distributor		Trade School - Construction (client provided)		Trade School - Movie Studio (Academic University)		Art Studio		Professional Offices		Community Facility		Light Industrial		Total	
Size (gsf)	24,041	gsf	392	du	-28,066	gsf	22,169	gsf	10,406	gsf	6,552	gsf	63,071	gsf	10,000	gsf	-39,500	gsf		
Peak Hour Trips																				
AM	111		317		-10		79		44		2		136		46		-77		648	
MD	702		158		-12		79		22		30		170		36		-64		1122	
PM	370		348		-12		79		72		27		159		46		-82		1007	
Sat MD	433		301		-12		0		22		30		42		66		-9		872	
Person Trips																				
AM	In	Out	In	Out	In	Out	In	Out	In	Out	In	Out	In	Out	In	Out	In	Out	In	Out
Auto	6	6	8	44	-3	-2	35	0	20	0	0	0	58	2	1	1	-30	-4	95	48
Taxi	0	0	1	3	0	0	1	0	0	0	0	0	1	0	0	0	-1	0	2	3
Bus	2	2	4	20	0	0	6	0	3	0	0	0	10	0	2	1	-5	-1	21	22
Subway	2	2	29	165	-2	-2	29	0	17	0	0	0	49	2	1	1	-25	-3	100	165
Walk/Other	45	45	6	36	-1	0	8	0	4	0	1	0	13	1	23	17	-7	-1	93	98
Total	55	55	47	269	-6	-4	79	0	44	0	2	0	131	5	26	20	-67	-9	312	336
MD	In	Out	In	Out	In	Out	In	Out	In	Out	In	Out	In	Out	In	Out	In	Out	In	Out
Auto	39	39	13	13	-1	-4	17	17	0	0	3	1	29	46	1	1	-14	-14	88	99
Taxi	0	0	1	1	0	0	0	0	0	0	0	0	1	1	0	0	0	0	2	2
Bus	11	11	6	6	0	-1	3	3	0	0	3	1	5	8	1	1	-3	-3	27	27
Subway	14	14	49	49	-1	-4	15	15	0	0	6	3	25	39	1	0	-12	-12	96	104
Walk/Other	288	288	11	11	0	-1	4	4	0	0	9	4	7	10	18	13	-3	-3	332	325
Total	351	351	79	79	-2	-10	40	40	0	0	22	9	66	104	21	16	-32	-32	544	556
PM	In	Out	In	Out	In	Out	In	Out	In	Out	In	Out	In	Out	In	Out	In	Out	In	Out
Auto	20	20	40	17	-1	-4	0	35	0	32	1	3	4	67	1	1	-4	-32	61	139
Taxi	0	0	3	1	0	0	0	1	0	1	0	0	0	1	0	0	0	-1	3	3
Bus	6	6	18	8	0	-1	0	6	0	6	1	3	1	12	1	1	-1	-6	26	35
Subway	7	7	150	64	-1	-4	0	29	0	27	2	6	3	56	1	1	-4	-27	158	160
Walk/Other	152	152	33	14	0	-1	0	8	0	7	3	8	1	15	21	19	-1	-7	207	214
Total	185	185	244	104	-2	-10	0	79	0	72	7	21	8	151	24	22	-10	-73	455	552
Saturday	In	Out	In	Out	In	Out	In	Out	In	Out	In	Out	In	Out	In	Out	In	Out	In	Out
Auto	26	21	25	25	-1	-4	0	0	5	5	3	1	11	7	1	2	-2	-2	69	55
Taxi	0	0	2	2	0	0	0	0	0	0	0	0	0	0	0	0	0	0	2	2
Bus	7	6	11	11	0	-1	0	0	1	1	3	1	2	1	2	2	0	0	26	21
Subway	10	8	93	93	-1	-4	0	0	4	4	6	3	9	6	1	1	-2	-2	120	109
Walk/Other	195	160	20	20	0	-1	0	0	1	1	9	4	2	2	25	31	0	0	252	215
Total	238	195	151	151	-2	-10	0	0	11	11	22	9	25	17	29	36	-4	-5	469	403
Taxi Overlap Rate																				
Vehicle Trips																				
AM	In	Out	In	Out	In	Out	In	Out	In	Out	In	Out	In	Out	In	Out	In	Out	In	Out
Auto	4	4	7	40	-2	-2	23	0	15	0	0	0	51	2	1	1	-26	-4	73	41
Taxi	0	0	0	2	0	0	0	0	0	0	0	0	1	0	0	0	0	0	1	2
Taxi Balanced	0	0	1	4	0	0	1	0	1	0	0	0	1	0	0	0	-1	0	3	5
Truck	0	0	0	0	-2	-15	0	0	0	0	0	0	1	1	0	0	-2	-2	-2	-15
Total	5	5	8	44	-5	-17	24	0	16	0	0	0	53	3	1	1	-29	-6	74	31
MD	In	Out	In	Out	In	Out	In	Out	In	Out	In	Out	In	Out	In	Out	In	Out	In	Out
Auto	28	28	12	12	-1	-4	12	12	0	0	1	0	26	40	1	0	-12	-12	65	76
Taxi	0	0	1	1	0	0	0	0	0	0	0	0	0	1	0	0	0	0	1	1
Taxi Balanced	0	0	1	1	0	0	0	0	0	0	0	0	1	1	0	0	0	0	2	2
Truck	0	0	0	0	-8	-2	0	0	0	0	0	0	1	1	0	0	-1	-1	-7	-1
Total	28	28	13	13	-9	-7	12	12	0	0	1	1	28	43	1	1	-14	-14	61	77
PM	In	Out	In	Out	In	Out	In	Out	In	Out	In	Out	In	Out	In	Out	In	Out	In	Out
Auto	15	15	36	15	-1	-4	0	23	0	24	0	1	3	59	1	1	-4	-28	50	106
Taxi	0	0	2	1	0	0	0	0	0	0	0	0	0	1	0	0	0	0	2	2
Taxi Balanced	0	0	4	2	0	0	0	1	0	1	0	0	0	2	0	0	0	-1	4	4
Truck	0	0	0	0	-8	-2	0	0	0	0	0	0	0	0	0	0	0	0	-8	-2
Total	15	15	40	17	-9	-7	0	24	0	25	0	1	3	61	1	1	-4	-29	46	108
Saturday	In	Out	In	Out	In	Out	In	Out	In	Out	In	Out	In	Out	In	Out	In	Out	In	Out
Auto	19	15	22	22	-1	-4	0	0	4	4	1	0	10	7	1	1	-2	-2	54	43
Taxi	0	0	1	1	0	0	0	0	0	0	0	0	0	0	0	0	0	0	2	2
Taxi Balanced	0	0	2	2	0	0	0	0	0	0	0	0	0	0	0	1	0	0	3	3
Truck	0	0	0	0	-8	-2	0	0	0	0	0	0	0	0	0	0	0	0	-8	-2
Total	19	15	25	25	-9	-7	0	0	4	4	1	0	10	7	1	2	-2	-2	49	44

Local Retail

The daily trip generation, temporal distribution, truck trip generation, truck temporal distribution, and truck directional splits were taken from the *CEQR TM*. The modal splits and auto/taxi occupancy were taken from data provided by NYC DOT for local retail in Queens. The in/out splits were taken from the East New York FEIS.

Residential

The daily trip generation, temporal distribution, truck trip generation, truck temporal distribution, and truck directional splits were taken from the *CEQR TM*. The modal splits and auto occupancy were taken from 2015 – 2019 ACS data for Census Tracts 25, 44, 47, 49, 43, 45, and 85 in Astoria, Queens. Taxi occupancy was taken from the Astoria Cove FEIS. The in/out splits were taken from the East New York FEIS.

Food Distributor

The daily trip generation were taken from data provided by NYC DOT. In/out splits, truck trip generation, truck temporal distribution, and truck directional splits were taken from data provided by NYC DCP EARD. Temporal distribution and auto/taxi occupancy were taken from the ACME Fish FEIS. The modal splits were taken from 2012 – 2016 CTPP RJTW data for Census Tracts 25, 44, 47, 49, 43, 45, and 85 in Astoria, Queens.

Trade School – Construction

The daily trip generation, temporal distributions, and in/out splits were taken from data provided by Andromeda Community Initiative (future tenant) on projected enrollment and occupancy characteristics, appended as **Appendix E**. The modal splits were taken from 2015 – 2019 ACS data for Census Tracts 25, 44, 47, 49, 43, 45, and 85 in Astoria, Queens. Auto/taxi occupancy, truck trip generation, truck temporal distribution, and truck directional splits were taken from the Downtown Jamaica Redevelopment Plan FEIS.

Trade School – Movie Studio

The daily trip generation and temporal distributions were taken from the *CEQR TM*, Academic University. The modal splits were taken from 2015 – 2019 ACS data for Census Tracts 25, 44, 47, 49, 43, 45, and 85 in Astoria, Queens. In/out splits were taken from data provided by NYC DCP EARD. Auto/taxi occupancy, truck trip generation, truck temporal distribution, and truck directional splits were taken from the Steiner Studios Media Campus FEIS.

Art Studio

All inputs are taken from the SoHo-No-Ho Neighborhood Plan EIS.

Professional Offices

The daily trip generation, temporal distribution, truck trip generation, truck temporal distribution, and truck directional splits were taken from the *CEQR TM*. The modal splits and auto occupancy were taken from 2015 – 2019 ACS data for Census Tracts 25, 44, 47, 49, 43, 45, and 85 in Astoria, Queens. In/out splits were taken from the Dutch Kills Rezoning FEIS. Taxi occupancy was taken from the Astoria 31st Street Rezoning EAS.

Community Facility

The daily trip generation, temporal distribution, and In/Out splits were taken from data provided by NYC DCP EARD. Modal splits, auto/taxi occupancy, truck trip generation, temporal distribution, and in/out splits were taken from the East New York FEIS.

Light Industrial

The daily trip generation, temporal distribution, In/Out splits, auto/taxi occupancy, truck trip generation, temporal distribution, and in/out split were taken from the East New York FEIS. The modal slit is taken from data provided by NYC DCP EARD.

CEQR Transportation Analysis Screening

The CEQR Technical Manual provides a methodology for evaluating the potential impacts of a proposed project on the transportation system. In accordance with the 2021 CEQR Technical Manual, a Level 1 screening assessment includes a trip generation analysis to determine whether the project would result in more than 50 vehicle trip-ends, 200 subway/rail or bus transit riders, or 200 pedestrian trips in a peak hour. The Level 2 screening is a trip assignment review that assigns the project-generated trips to specific intersections, transit lines, and pedestrian elements and identifies intersections with 50 or more vehicle trips, pedestrian elements with 200 or more pedestrian trips, 50 bus trips in a single direction on a single route, 25 or more additional CWFS ferry passengers being assigned to a CWFS ferry route (in one direction) or 50 or more additional passengers at a single CWFS ferry landing, or 200 passengers at a subway station or line during any analysis peak hour which would require detailed analyses.

Trip Generation Summary

Table 2.16-3 shows the Total Trip Generation projected for the proposed development. The project would generate approximately 499 total pedestrian trips during the weekday AM peak hour, 910 during the weekday midday peak hour, 801 during the weekday PM peak hour, and 744 during the Saturday midday peak hour as shown in **Table 2.16-3**.

The project would generate approximately 105 total vehicle trips during the weekday AM peak hour, 138 during the weekday midday peak hour, 154 during the weekday PM peak hour, and 94 during the Saturday midday peak hour as shown in **Table 2.16-3**.

Level 1 Screening Assessment

The Level 1 Screening evaluates the number of vehicle and person trip-ends by mode to determine if further analysis is warranted. For the purposes of the Level 1 Screening, all trucks were converted to Passenger Car Equivalents (PCE) as per the 2021 CEQR Technical Manual. Incremental project-generated trip ends are detailed below in **Table 2.16-4**.

Table 2.16-4: Project Generated Trip-Ends

Peak Hour	AM Peak Hour	Midday Peak Hour	PM Peak Hour	Saturday Peak Hour
Total Walk Only Trip-Ends	191	657	422	467
Walk Only Threshold	200	200	200	200
Total Subway Trip-Ends	265	200	319	229
Subway Threshold	200	200	200	200
Total MTA Bus Trip-Ends	43	53	61	47
MTA Bus Threshold	200	200	200	200
Total Pedestrian Trip-Ends	499	910	801	744
Pedestrian Threshold	200	200	200	200
Total Vehicular Trip-Ends	105	138	154	94
Vehicular Threshold	50	50	50	50

Highlighted cells denote trips in exceedance of 200 pedestrians or 50 vehicles per peak hour

Traffic

As shown in **Table 2.16-4**, the proposed projects would generate greater than 50 vehicle trips during all peak hours. As this exceeds the Level 1 threshold of 50 vehicle trip-ends, a Level 2 screening assessment would be warranted for these peak hours.

Subway

As shown in **Table 2.16-4**, the proposed project would generate greater than 200 subway trips during all of the peak hours. Therefore, a Level 2 screening assessment would be warranted for these peak hours.

Bus

As shown in **Table 2.16-4**, the proposed project would generate fewer than 200 MTA bus trips during all of the peak hours. Therefore, a Level 2 screening assessment would not be warranted for these peak hours.

Pedestrian

In addition to walk-only trips, all bus and subway trips generated by the proposed project would begin or end as pedestrian trips. All vehicles were assumed to park on-site for both Sites 1 and 2 and all taxi pick-up/drop-offs were assumed to occur at the entrance to the building. As such, no walk trips related to vehicular trips were assigned to the pedestrian network. The proposed project would exceed the Level 1 threshold of 200 trips during all the peak hours, as shown in **Table 2.16-4**. Therefore, a Level 2 screening assessment would be warranted for these peak hours.

Level 2 Screening Assessment

As part of the Level 2 screening assessment, project-generated trips were assigned to specific intersections and pedestrian elements near the project site. Further quantified analyses to assess the potential impacts of the proposed project on the transportation system would be warranted if the trip assignments were to identify key intersections incurring 50 or more peak hour vehicle trips, pedestrian elements incurring 200 or more peak hour pedestrian trips, or Subway Stations or lines incurring 200 or more peak hour trips.

Site Access and Egress

Vehicular

Access and egress to the project site was conservatively analyzed to be primarily at the entrance/exits to the parking garages for Sites 1 and 2. While truck loading and unloading zones are present along 11th and 12th Street, they are not materialistically different from the parking garage entrance/exit locations relative to the street network and so a singular point was used for the purpose of assessing the quantitative impact of vehicles at the surrounding intersections.

Pedestrian

The proposed project has numerous entrance/exits for pedestrian trips that are specific to each site and land use. Pedestrians were assigned to specific frontages based on their trip purpose. Where a location had multiple entrances/exits on the same frontage, a singular point was used, similar to the above vehicular trip assignments.

Traffic

As shown previously in **Table 2.16-4**, incremental vehicle trips resulting from the proposed project would exceed the CEQR Level-1 screening threshold during the Weekday AM, Midday, PM, and Saturday Midday peak hours. The most likely travel routes to and from the project site, prevailing travel patterns, commuter origin-destination (O-D) summaries from the most recent census data, the configuration of the roadway network, and the anticipated locations of site access and egress by site and land use were examined and utilized to perform vehicular trip assignments. All vehicular trips (auto, taxi, truck) were conservatively assumed to enter the proposed project location via the specific frontages for Sites 1 and 2. Census Transportation Planning Product Reverse Journey to Work and Journey to Work (2012 – 2016) data was utilized to determine the relative O-D points of trips. The proximity to Vernon Blvd, Broadway, and other major through-routes in western Astoria was taken into account. Additionally, as the block in the project area are long North-to-South and short East-to-West, vehicular trips were assumed to take largely efficient routes, with minimal meandering throughout the neighborhood.

Summary

A summary of projected intersection volumes by peak hour are shown in **Table 2.16-5** and in **Figure 2.16-1 to Figure 2.16-4**. Project-generated vehicle movement maps are in **Appendix E**. In total, two intersections during the Weekday AM, two during the Weekday Midday, two during the Weekday PM, and one intersection during the Saturday Midday peak hours have been selected for further analysis.

Table 2.16-5: Vehicular Intersection Summary

Intersection	Weekday AM	Weekday MD	Weekday PM	Saturday MD
1 - 35th Avenue and 10th Street	0	0	0	0
2 - 35th Avenue and 11th Street	11	28	27	24
3 - 35th Avenue and 12th Street	30	20	14	7
4 - 34th Avenue and 10th Street	23	18	6	11
5 - 34th Avenue and 11th Street	**50**	**69**	**64**	**59**
6 - 34th Avenue and 12th Street	**88**	**59**	47	43
7 - 34th Avenue and 13th Street	38	31	33	33
8 - 33rd Road and 10th Street	-3	15	27	6
9 - 33rd Road and 11th Street	-4	27	47	10
10 - 33rd Road and 12th Street	-2	48	**92**	18
11 - 33rd Avenue and 11th Street	2	1	1	1
12 - 33rd Avenue and 12th Street	4	25	47	12
13 - 33rd Avenue and 13th Street	0	0	0	0

Figure 2.16-1: Weekday AM Vehicular Intersections

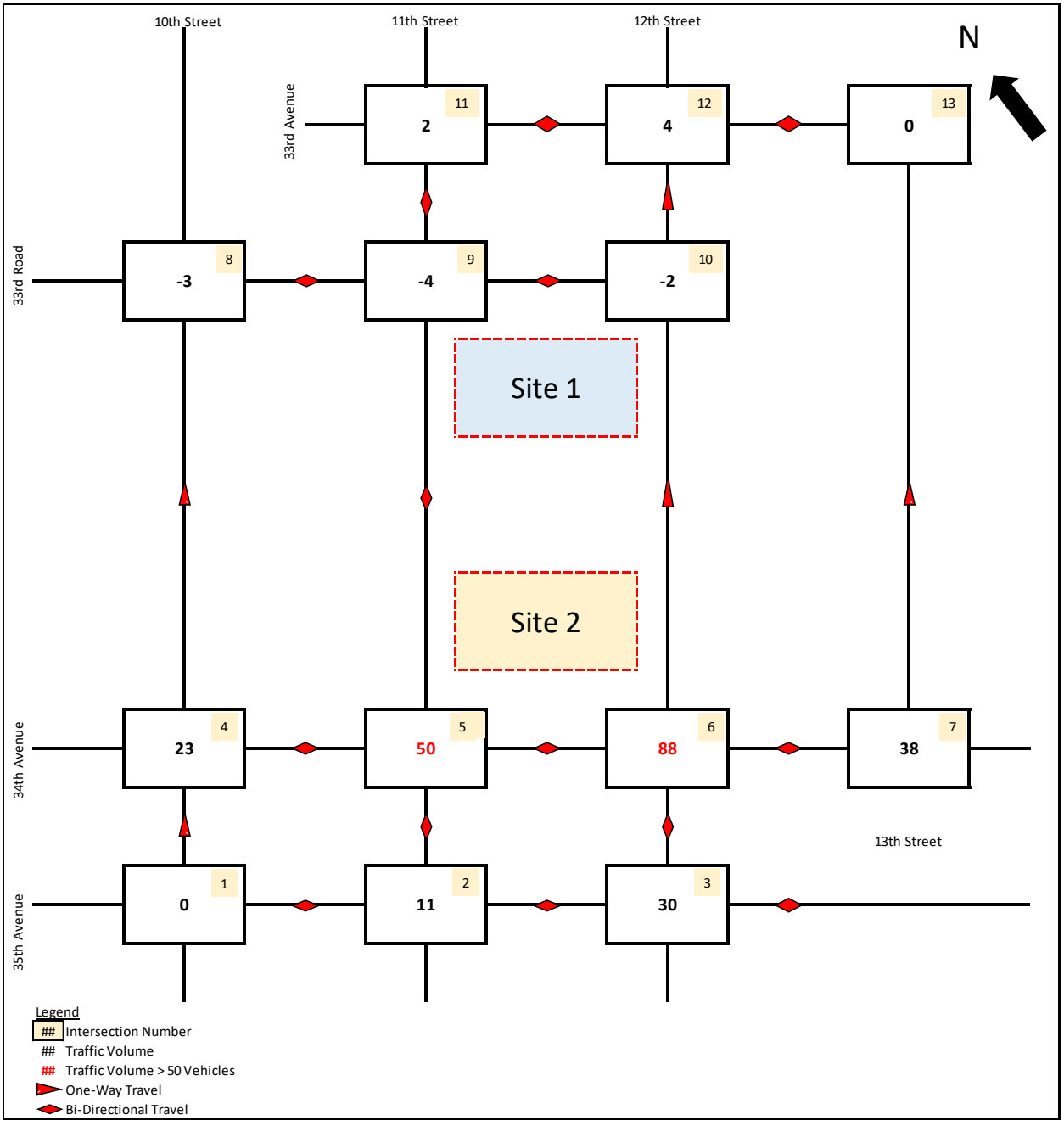

Figure 2.16-2: Weekday Midday Vehicular Intersections

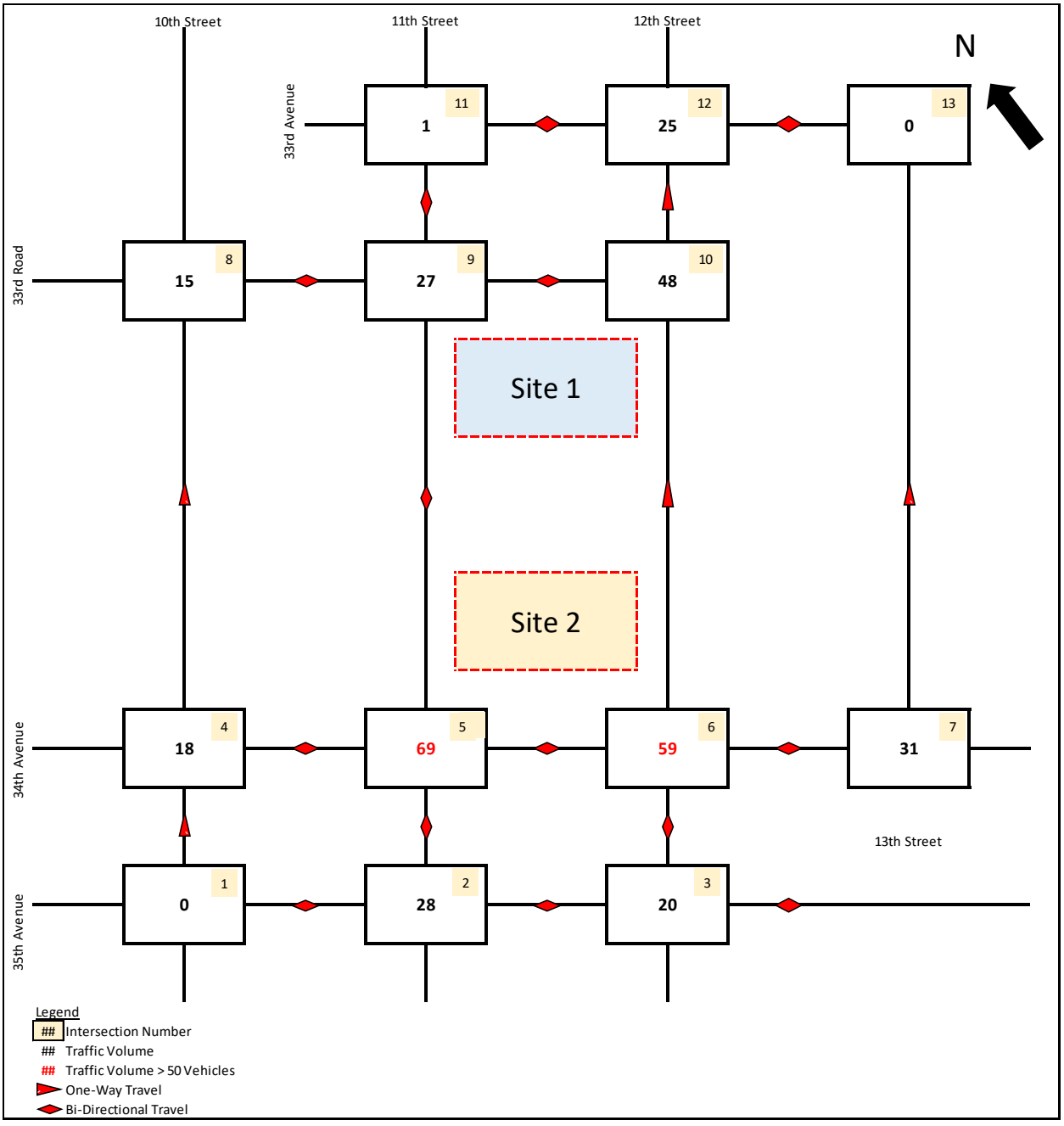

Figure 2.16-3: Weekday PM Vehicular Intersections

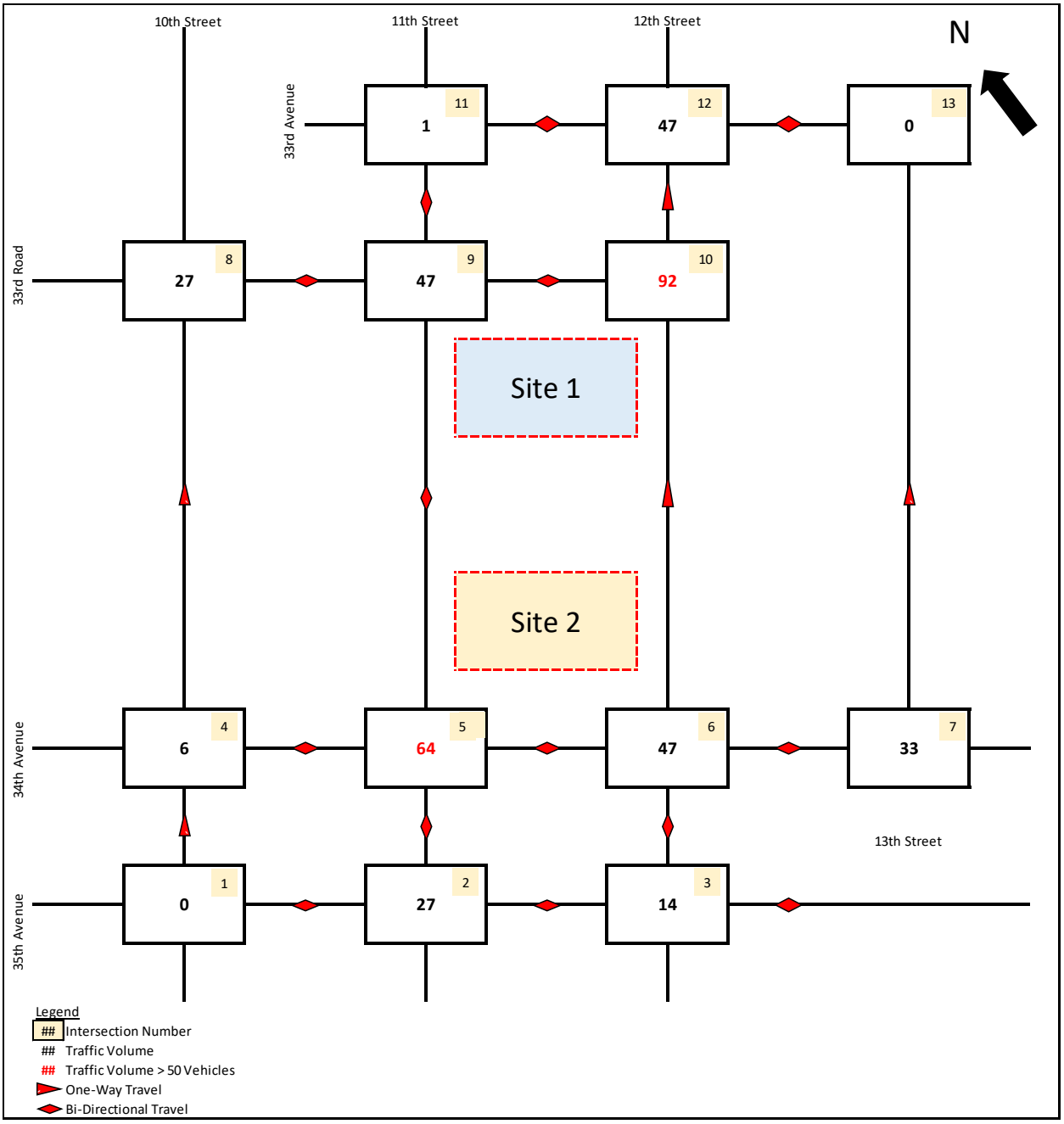

Figure 2.16-4: Saturday Midday Vehicular Intersections

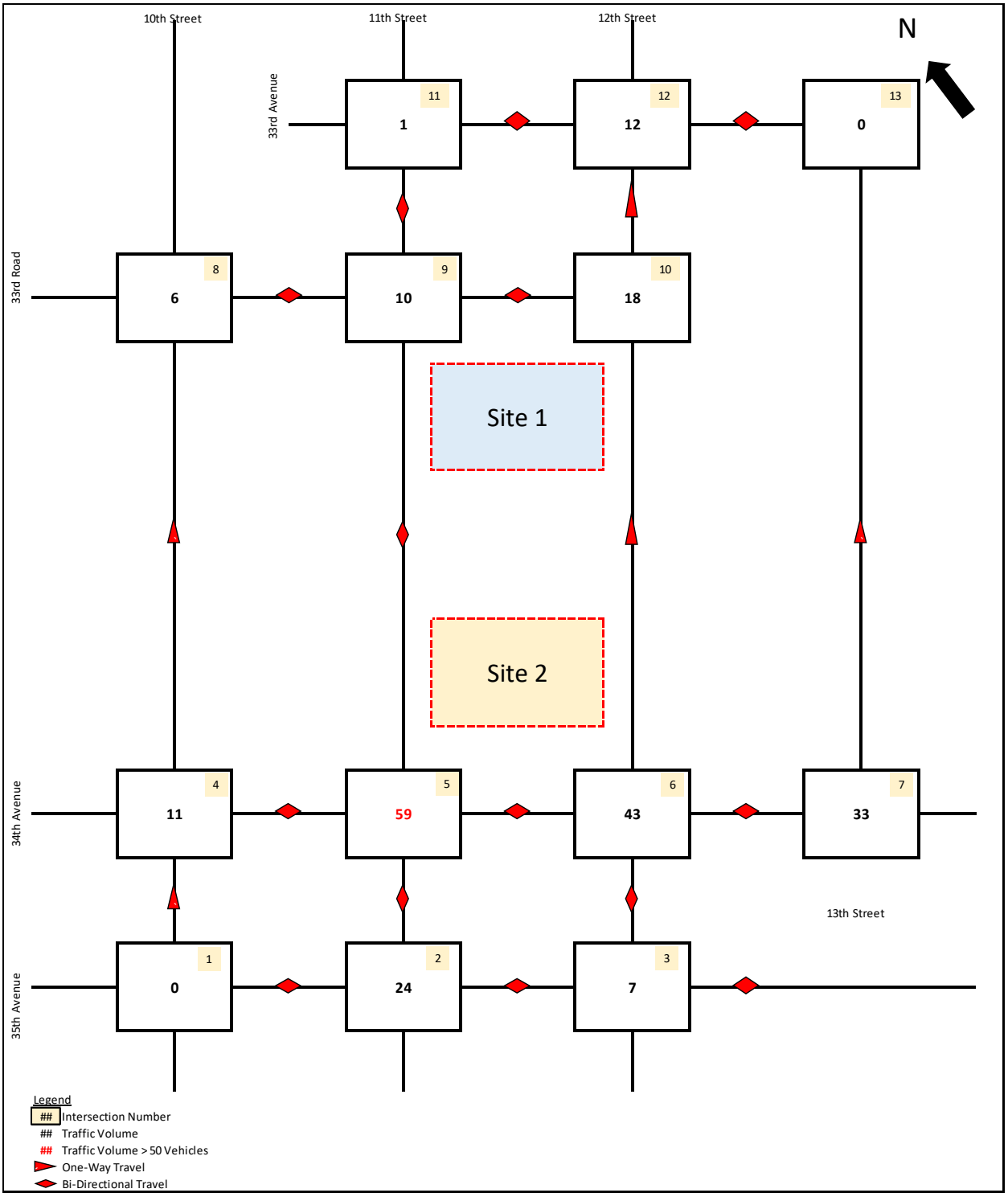

Pedestrians

As shown previously in **Table 2.16-4**, incremental pedestrian trips resulting from the proposed project would exceed the CEQR Level-1 screening threshold during the Weekday AM, Midday, PM, and Saturday Midday peak hours. Level 2 pedestrian trip assignments were individually developed for all the proposed uses, as summarized in **Table 2.16-6** - **Table 2.16-8** and **Figure 2.16-5** - **Figure 2.16-8** and discussed below. Project generated pedestrian movement maps are in **Appendix E**.

Auto, Taxi, and Truck Trips

For all uses, motorists would park at the on-site parking lots. Therefore, the passengers of these vehicles would not traverse the pedestrian street network.

MTA Bus Trips

The location of bus stops, the bus lines that serve each stop, the route each line covers, and the connections these lines allow for, were considered and applied to bus riders traveling to and from the project site. Specifically, the B25 and B48 were considered as major East/West and North/South routes, respectively.

Subway Trips

The nearest subway stations are the Broadway NW and 21st Street/Queensbridge F stations. Both stations are between ¾ and 1 mile away from the project site. The locations of these stations, the lines each station serves, the route each line covers, and the connections these lines allow for, were considered and applied to the subway riders traveling to and from the project site. Specifically, the 21st Street/Queensbridge F station was considered the main station for trips going to/coming from the East of the site, the Broadway NW was considered the main station for trips going to/coming from North of the site, and trips going to/coming from both the South or West of the site were split evenly between the two stations.

Walk-Only Trips

Pedestrian walk-only trips were developed by distributing project-generated trips throughout the network based on the relative population weight of all census tracts within a ¼ mile radius using the 2015 – 2019 ACS 5-Year Table B1003. The specific entrance / exit pedestrians used based on their trip purpose and the specifics of the street network surrounding the site were taken into account as well as the land use characteristics of the surrounding neighborhood.

Summary

Based on the detailed assignment of pedestrian trips, two sidewalks were selected during the Weekday Midday and one during the Weekday PM peak hour. While some corner reservoirs are projected to exceed 200 pedestrians during one or more peak hour, as the intersections in question are unsignalized and signal timing for adjacent crosswalks is a fundamental part of corner LOS analysis, these locations will be omitted

from detailed LOS analysis. Sidewalk, corner reservoir, and crosswalk volumes are summarized in **Table 2.16-6**, **Table 2.16-7**, and **Table 2.16-8,** respectively.

Table 2.16-6: Sidewalk Projected Pedestrian Trip Summary

Location	Weekday AM	Weekday MD	Weekday PM	Saturday MD
North side of 34th Avenue between Site Entrance/Exit and 12th Street	81	**244**	168	182
North side of 34th Avenue between 11th Street and Site Entrance/Exit	92	156	145	158
South side of 33rd Road between Site Entrance/Exit and 12th Street	109	160	166	160
South side of 33rd Road between 11th Street and Site Entrance/Exit	103	137	158	143
East side of 11th Street between 33rd Road and Q 104 Bus Stop	91	189	160	161
East side of 11th Street between Q 104 Bus Stop and 34th Avenue	128	**241**	**204**	175
West side of 12th Street between 33rd Road and Site Entrance/Exit	35	43	43	26
West side of 12th Street between Site Entrance/Exit and 34th Avenue	28	29	38	28
South side of 33rd Road between 10th Street and 11th Street	9	18	15	12
West side of 11th Street between 34th Avenue and 33rd Avenue	38	37	53	44

Highlighted cells indicate locations where detailed LOS analysis is warranted

Table 2.16-7: Corner Projected Pedestrian Trip Summary

Intersection	Corner	Weekday AM	Weekday MD	Weekday PM	Saturday MD
5 - 34th Avenue and 11th Street	**NE**	196	**324**	**297**	**271**
	SE	131	200	190	152
	SW	76	84	105	98
	NW	78	86	107	101
6 - 34th Avenue and 12th Street	**NE**	59	175	120	129
	SE	45	165	103	116
	SW	44	165	103	116
	NW	94	**263**	186	195
9 - 33rd Road and 11th Street	**NE**	34	108	71	82
	SE	142	**263**	**240**	**233**
	SW	57	91	91	81
	NW	15	44	31	31
10 - 33rd Road and 12th Street	**NE**	34	43	48	41
	SE	41	57	59	53
	SW	138	189	199	173
	NW	69	86	96	82

Highlighted cells indicate locations where detailed LOS analysis is warranted

Table 2.16-8: Crosswalk Projected Pedestrian Trip Summary

Intersection	Crosswalk	Weekday AM	Weekday MD	Weekday PM	Saturday MD
5 - 34th Avenue and 11th Street	**N**	41	50	55	58
	E	131	200	190	152
	S	2	3	3	3
	W	74	81	102	95
6 - 34th Avenue and 12th Street	**N**	52	161	108	118
	E	9	29	19	21
	S	36	136	84	95
	W	26	92	59	62
9 - 33rd Road and 11th Street	**N**	4	8	7	6
	E	34	108	71	82
	S	56	90	91	80
	W	11	36	24	25
10 - 33rd Road and 12th Street	**N**	0	0	0	0
	E	69	86	96	82
	S	0	0	0	0
	W	69	86	96	82

Highlighted cells indicate locations where detailed LOS analysis is warranted

Figure 2.16-5: Weekday AM Pedestrian Elements

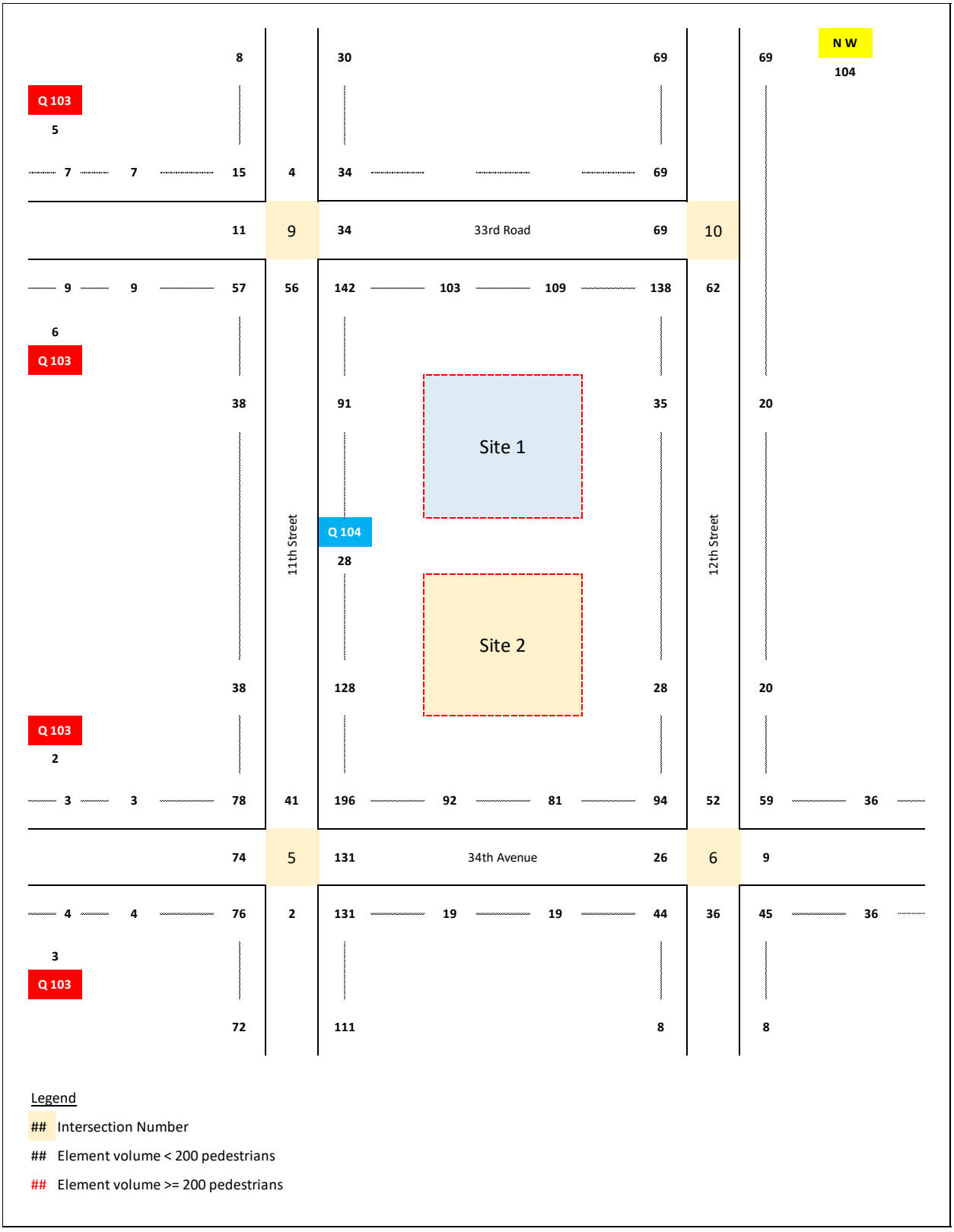

Figure 2.16-6: Weekday Midday Pedestrian Elements

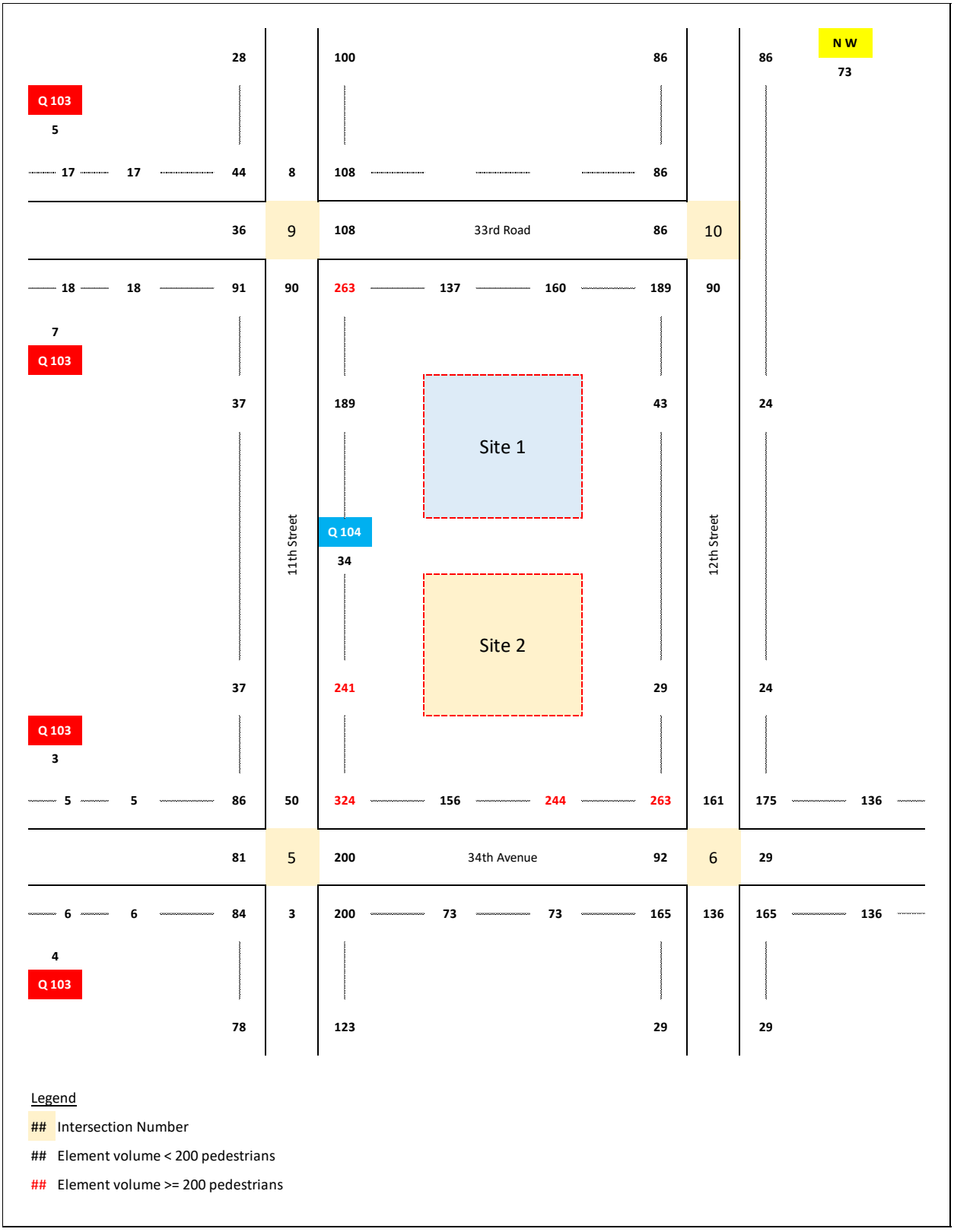

Figure 2.16-7: Weekday PM Pedestrian Elements

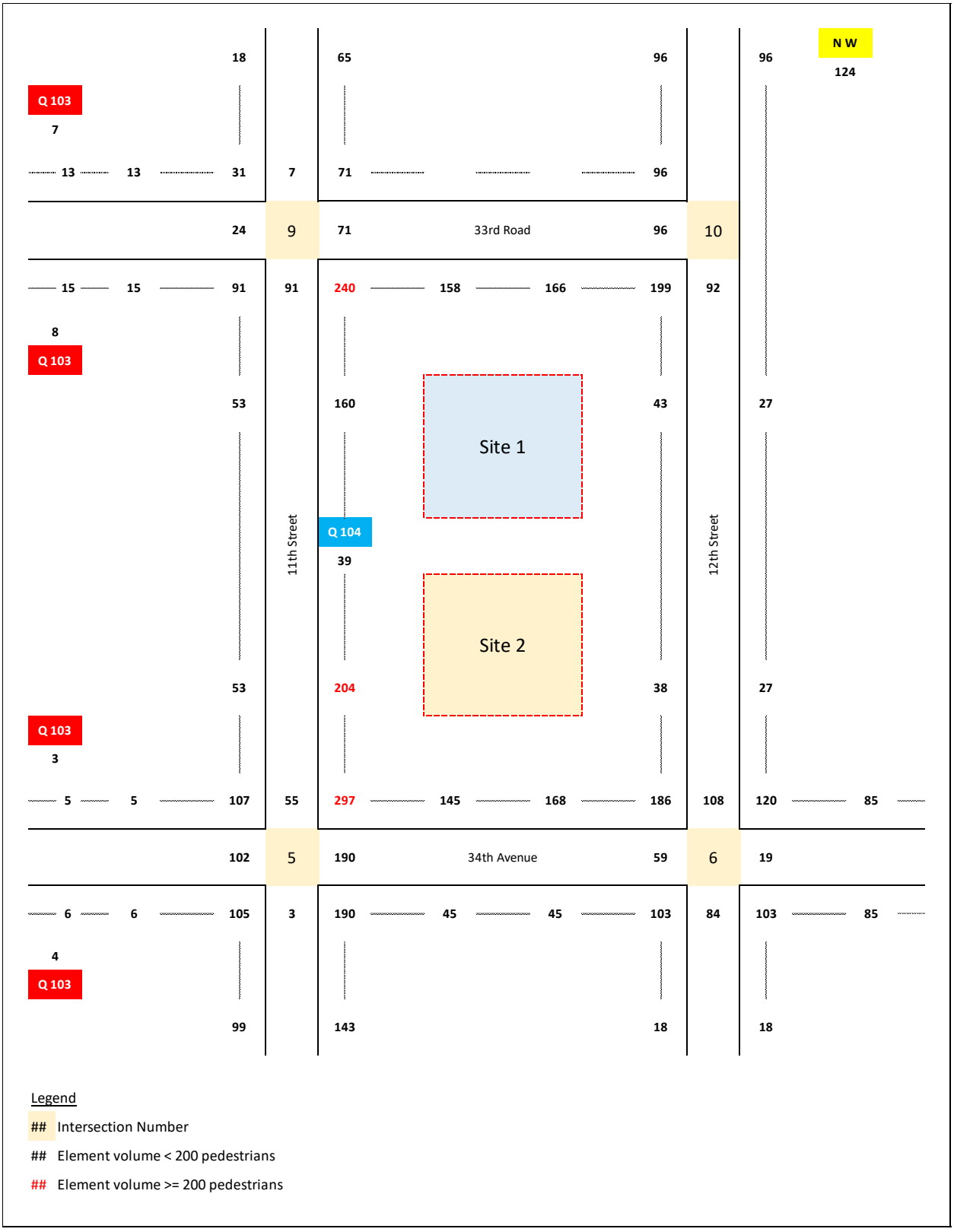

Figure 2.16-8: Saturday Midday Pedestrian Elements

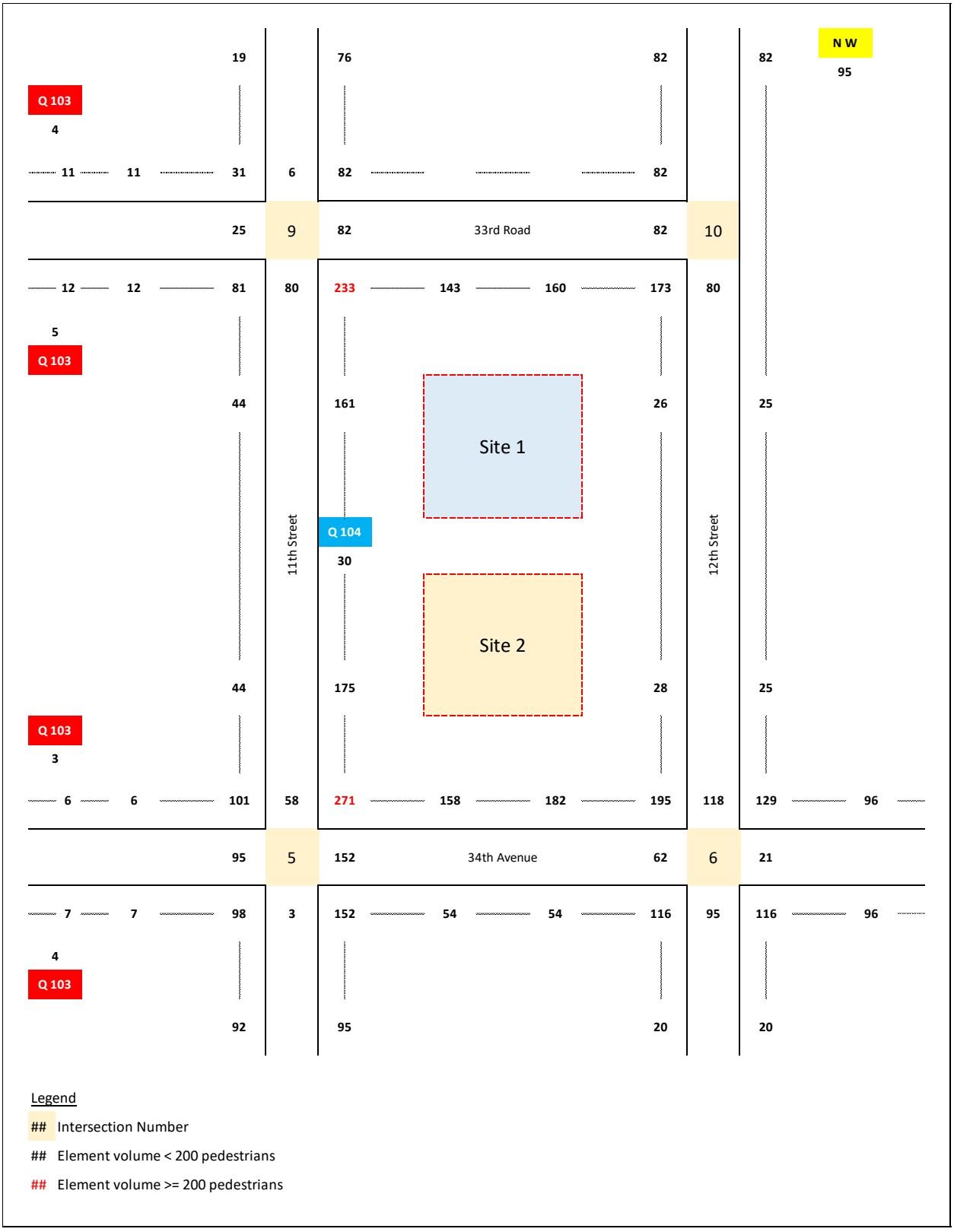

Transit

As shown previously in **Table 2.16-4**, incremental subway rider trips resulting from the proposed project would exceed the CEQR Level-1 screening threshold during the Weekday AM, Midday, PM, and Saturday Midday peak hours. Subway riders were assigned to stations and directions as described above based on their origin and destination points. As **Table 2.16-9** shows, no Subway station would experience greater than 200 new project generated subway riders, and as such a detailed analysis would not be warranted.

Table 2.16-9: Subway Station Summary

Location	Weekday AM	Weekday MD	Weekday PM	Saturday MD
21st Street-Queensbridge Station (F)	161	127	195	134
Broadway Station (NW)	104	73	124	95

Transportation Analysis Methodology

Traffic Operations

The operation of all signalized intersections and unsignalized intersections in the study area were assessed using methodologies presented in the *2000 Highway Capacity Manual* (HCM) using the Synchro 11 software. The HCM procedure evaluates the LOS for signalized and unsignalized intersections using average stop control delay, in seconds per vehicle.

Signalized Intersections

The average control delay per vehicle is the basis for LOS determination for individual lane groups (grouping of movements in one or more travel lanes), the approaches, and the overall intersection. The levels of service are defined in **Table 2.16-10**.

Table 2.16-10: Level of Service Criteria for Signalized Intersections[7]

LOS	Average Control Delay
A	≤ 10.0 seconds
B	> 10.0 and ≤ 20.0 seconds
C	> 20.0 and ≤ 35.0 seconds
D	> 35.0 and ≤ 55.0 seconds
E	> 55 and ≤ 80.0 seconds
F	> 80.0 seconds

Although the HCM methodology calculates a volume-to-capacity (v/c) ratio, there is no strict relationship between v/c ratios an LOS as defined in the HCM. A high v/c ratio indicates substantial traffic passing through an intersection, but a high v/c ratio combined with a low average delay actually represents the most efficient

[7] **Source**: Transportation Research Board. *Highway Capacity Manual*, 2000.

condition in terms of traffic engineering standards, where an approach or the whole intersection processes traffic close to its theoretical maximum capacity with minimal delay. However, very high v/c ratios – especially those approaching or greater than 1.0 – are often correlated with a deteriorated LOS. Other important variables affecting delay include cycle length, progression, and green time. LOS A and B indicate good operating conditions with minimal delay. At LOS C, the number of vehicles stopping is higher, but congestion is still fairly light. LOS D describes a condition where congestion levels are more noticeable and individual cycle failures (a condition where motorists may have to wait for more than one green phase to clear the intersection) can occur. Conditions at LOS E and F reflect poor service levels, and cycle breakdown are frequent. The HCM methodology also provides a summary of the total intersection operating conditions. The analysis chooses the two critical movements (the worst case from each roadway) and calculates a summary critical v/c ratio. The overall intersection delay, which determines the intersection's LOS, is based on a weighted average of control delays of the individual lane groups. Within New York City, the midpoint of LOS D (45 seconds of delay) is generally considered as the threshold between acceptable and unacceptable operations.

Significant Adverse Impact Criteria

According to the criteria presented in the *CEQR TM*, impacts are considered significant and require examination of mitigation if a Lane group under the With-Action condition is not projected to operate within the acceptable LOS A, B, C, or D. For lane groups projected to operate at LOS E under With-Action conditions, an increase in projected delay of 5.0 or more seconds compared to the No-Action condition should be considered significant. For lane groups projected to operate at LOS F under With-Action conditions, an increase in projected delay of 4.0 or more seconds compared to the No-Action condition should be considered significant.

Unsignalized Intersections

For unsignalized intersections, the average control delay is defined as the total elapsed time from which a vehicle stops at the end of the queue until the vehicle departs from the stop line. This includes the time required for the vehicle to travel from the last-in-queue to the first-in-queue position. The average control delay for any particular minor movement is a function of the service rate or capacity of the approach and the degree of saturation. The LOS criteria for unsignalized intersections are summarized in **Table 2.16-11**.

Table 2.16-11: Level of Service Criteria for Unsignalized Intersections[8]

LOS	Average Control Delay
A	≤ 10.0 seconds
B	> 10.0 and ≤ 15.0 seconds
C	> 15.0 and ≤ 25.0 seconds
D	> 25.0 and ≤ 35.0 seconds
E	> 35 and ≤ 50.0 seconds
F	> 50.0 seconds

[8] **Source**: Transportation Research Board. *Highway Capacity Manual*, 2000.

The LOS thresholds for unsignalized intersections are different from those for signalized intersections. The primary reason is that drivers expect different levels of performance from different types of transportation facilities. The expectation is that a signalized intersection is designed to carry higher traffic volumes than an unsignalized intersection; hence, the corresponding control delays are higher at a signalized intersection than at an unsignalized intersection for the same LOS. In addition, certain driver behavioral considerations combine to make delays at signalized intersections less onerous than at unsignalized intersections. For example, drivers at signalized intersections are able to relax during the red interval, whereas drivers on minor approaches to unsignalized intersections must remain attentive to the task of identifying acceptable gaps and vehicle conflicts. Also, there is often much more variability in the amount of delay experienced by individual drivers at unsignalized intersections. For these reasons, the corresponding delay thresholds for unsignalized intersections are lower than those of signalized intersections. As with signalized intersections, within New York City, the midpoint of LOS D (30 seconds of delay) is generally perceived as the threshold between acceptable and unacceptable operations.

Significant Adverse Impact Criteria

The same sliding scale of significant delays described for signalized intersections applies for unsignalized intersections. For the minor street to trigger significant adverse impacts, at least 90 passenger car equivalents (PCE) must be identified in the With-Action condition in any peak hour.

Pedestrian Operations

The adequacy of the study area's sidewalks, crosswalks, and corner reservoir capacities in relation to the demand imposed on them is evaluated based on the methodologies presented in the 2010 HCM, pursuant to procedures details in the *2021 CEQR Technical Manual (CEQR TM)*. Detailed LOS impact analysis was performed on the specific pedestrian elements noted above.

Sidewalks

The primary performance measure for sidewalks and walkways is pedestrian space, expressed as square feet per pedestrian (SFP), which is an indicator of the quality of pedestrian movement and comfort. The calculation of the sidewalk SFP is based on the pedestrian volumes by direction, the effective sidewalk or walkway width, and average walking speed. The SFP forms the basis for a sidewalk LOS analysis. The determination of sidewalk LOS is also dependent on whether the pedestrian flow being analyzed is best described as "non-platoon" or "platoon." Non-platoon flow occurs when pedestrian volume within the peak 15-minute period is relatively uniform, whereas, platoon flow occurs when pedestrian volumes vary significantly with the peak 15-minute period. Such variation typically occurs near bus stops, subway stations, and/or where adjacent crosswalks account for much of the walkway's pedestrian volume. According to the 2021 CEQR Technical Manual, all sidewalk/walkway analyses, regardless of the area type, should be based on pedestrian platooned flow, which is more representative of pedestrian activities within New York City CBD and non-CBD areas. The LOS standards for sidewalks are summarized in **Table 2.16-12**.

Significant Adverse Impact Criteria

There are two sliding-scale formulas for determining significant adverse sidewalk impacts. For non-platoon flow, the determination of significant adverse sidewalk impacts is based on the sliding scale using the following formula: Y ≥ X/9.0 – 0.31, where Y is the decrease in pedestrian space in SFP and X is the No-Action pedestrian space in SFP. For platoon flow, the sliding-scale formula is Y ≥ X/(9.5 – 0.321). Since a decrease in pedestrian space within acceptable levels would not constitute a significant adverse impact, these formulas would apply only if the With-Action pedestrian space falls short of LOS C in non-CBD areas or mid-LOS D in CBD areas. **Table 2.16-13** summarizes the sliding scale guidance provided by the CEQR Technical Manual for determining potential significant adverse impacts on sidewalks.

Table 2.16-12: Level of Service for Pedestrian Elements[9]

LOS	Sidewalks	
	Non-Platoon Flow	Platoon Flow
A	> 60 SFP	> 530 SFP
B	> 40 and ≤ 60 SFP	> 90 and ≤ 530 SFP
C	> 24 and ≤ 40 SFP	> 40 and ≤ 90 SFP
D	> 15 and ≤ 24 SFP	> 23 and ≤ 40 SFP
E	> 8 and ≤ 15 SFP	> 11 and ≤ 23 SFP
F	≤ 8 SFP	≤ 11 SFP

SFP =-square feet per pedestrian

[9] Sources: *CEQR Technical Manual*

Table 2.16-13: Significant Adverse Impact Guidance for Sidewalks[10]

Non-CBD Areas		CBD Areas	
No-Action Condition Pedestrian Space (ft²/p)	With-Action Condition Pedestrian Space Reduction to be Considered a Significant Impact (ft²/p)	No-Action Condition Pedestrian Space (ft²/p)	With-Action Condition Pedestrian Space Reduction to be Considered a Significant Impact (ft²/p)
≥ 44.3	With-Action Condition ≤ 40.0		
43.5 to 44.2	Reduction ≥ 4.3		
42.5 to 43.4	Reduction ≥ 4.2		
41.6 to 42.4	Reduction ≥ 4.1		
40.6 to 41.5	Reduction ≥ 4		
39.7 to 40.5	Reduction ≥ 3.9		
38.7 to 39.6	Reduction ≥ 3.8		
37.8 to 38.6	Reduction ≥ 3.7		
36.8 to 37.7	Reduction ≥ 3.6		
35.9 to 36.7	Reduction ≥ 3.5		
34.9 to 35.8	Reduction ≥ 3.4	≥ 34.7	With-Action Condition ≤ 31.4
34 to 34.8	Reduction ≥ 3.3	34 to 34.6	Reduction ≥ 3.3
33 to 33.9	Reduction ≥ 3.2	33 to 33.9	Reduction ≥ 3.2
32.1 to 32.9	Reduction ≥ 3.1	32.1 to 32.9	Reduction ≥ 3.1
31.1 to 32	Reduction ≥ 3	31.1 to 32	Reduction ≥ 3
30.2 to 31	Reduction ≥ 2.9	30.2 to 31	Reduction ≥ 2.9
29.2 to 30.1	Reduction ≥ 2.8	29.2 to 30.1	Reduction ≥ 2.8
28.3 to 29.1	Reduction ≥ 2.7	28.3 to 29.1	Reduction ≥ 2.7
27.3 to 28.2	Reduction ≥ 2.6	27.3 to 28.2	Reduction ≥ 2.6
26.4 to 27.2	Reduction ≥ 2.5	26.4 to 27.2	Reduction ≥ 2.5
25.4 to 26.3	Reduction ≥ 2.4	25.4 to 26.3	Reduction ≥ 2.4
24.5 to 25.3	Reduction ≥ 2.3	24.5 to 25.3	Reduction ≥ 2.3
23.5 to 24.4	Reduction ≥ 2.2	23.5 to 24.4	Reduction ≥ 2.2
22.6 to 23.4	Reduction ≥ 2.1	22.6 to 23.4	Reduction ≥ 2.1
21.6 to 22.5	Reduction ≥ 2	21.6 to 22.5	Reduction ≥ 2
20.7 to 21.5	Reduction ≥ 1.9	20.7 to 21.5	Reduction ≥ 1.9
19.7 to 20.6	Reduction ≥ 1.8	19.7 to 20.6	Reduction ≥ 1.8
18.8 to 19.6	Reduction ≥ 1.7	18.8 to 19.6	Reduction ≥ 1.7
17.8 to 18.7	Reduction ≥ 1.6	17.8 to 18.7	Reduction ≥ 1.6
16.9 to 17.7	Reduction ≥ 1.5	16.9 to 17.7	Reduction ≥ 1.5
15.9 to 16.8	Reduction ≥ 1.4	15.9 to 16.8	Reduction ≥ 1.4
15 to 15.8	Reduction ≥ 1.3	15 to 15.8	Reduction ≥ 1.3
14 to 14.9	Reduction ≥ 1.2	14 to 14.9	Reduction ≥ 1.2
13.1 to 13.9	Reduction ≥ 1.1	13.1 to 13.9	Reduction ≥ 1.1
12.1 to 13	Reduction ≥ 1	12.1 to 13	Reduction ≥ 1
11.2 to 12	Reduction ≥ 0.9	11.2 to 12	Reduction ≥ 0.9
10.2 to 11.1	Reduction ≥ 0.8	10.2 to 11.1	Reduction ≥ 0.8
9.3 to 10.1	Reduction ≥ 0.7	9.3 to 10.1	Reduction ≥ 0.7
8.3 to 9.2	Reduction ≥ 0.6	8.3 to 9.2	Reduction ≥ 0.6
7.4 to 8.2	Reduction ≥ 0.5	7.4 to 8.2	Reduction ≥ 0.5
6.4 to 7.3	Reduction ≥ 0.4	6.4 to 7.3	Reduction ≥ 0.4

[10]Sources: New York City Mayor's Office of Environmental Coordination, *CEQR Technical Manual*.

Detailed Traffic Analysis

As described above, Level 1 and Level 2 screening analysis were prepared to identify the vehicular intersections that warrant a detailed analysis. Based on the assignment of vehicular trips, two intersections during the Weekday AM, two during the Weekday Midday, two during the Weekday PM, and one during the Saturday Midday peak hours have been selected for further analysis.

2021 Existing Conditions

Roadway Network and Traffic Study Area

The traffic study area includes mainly local roads in Astoria, Queens. The site is in close proximity to major North-South thoroughfares, including Vernon Blvd and 21st Street as well as East-West thoroughfares such as Broadway and 36th Avenue. Many cross-street are on-way, some of which end in dead ends/T-junctions. Existing volumes are shown below in **Figure 2.16-9** through **Figure 2.16-12** for total vehicles. Passenger vehicle and truck/heavy vehicle volumes are shown in **Appendix E**.

Traffic Conditions

Traffic data was collected in October 2021 in accordance with procedures outlined in the *CEQR TM* during the weekday hours of 7:00am – 10:00am, 11:00am – 2:00pm, and 4:00pm – 6:00pm as well as 11:00am – 2:00pm on Saturdays. Volumes were summarized by 15min periods. Given that data was collected during the COVID-19 pandemic, adjustment factors provided by NYC DOT were applied to existing vehicular and pedestrian counts. These factors are displayed below in **Table 2.16-14**. Inventories of intersection geometry, parking regulations/activities, and signal timing were recorded as well.

Table 2.16-14: COVID-19 Adjustment Factors

Peak Hour	Vehicles	Pedestrians
Weekday AM	1.31	1.94
Weekday Midday	1.16	1.60
Weekday PM	1.20	1.05
Saturday Midday	1.14	1.60

Level of Service

A summary of existing conditions traffic analysis results by lane group is presented in **Table 2.16-15**. Detailed on LOS, v/c ratios, and average delays are presented **Table 2.16-16** - **Table 2.16-19**. All of the study area's intersection lane groups operate acceptably at LOS D or better (≥35 second of delay for unsignalized intersections).

Figure 2.16-9: Existing Weekday AM Vehicle Summary

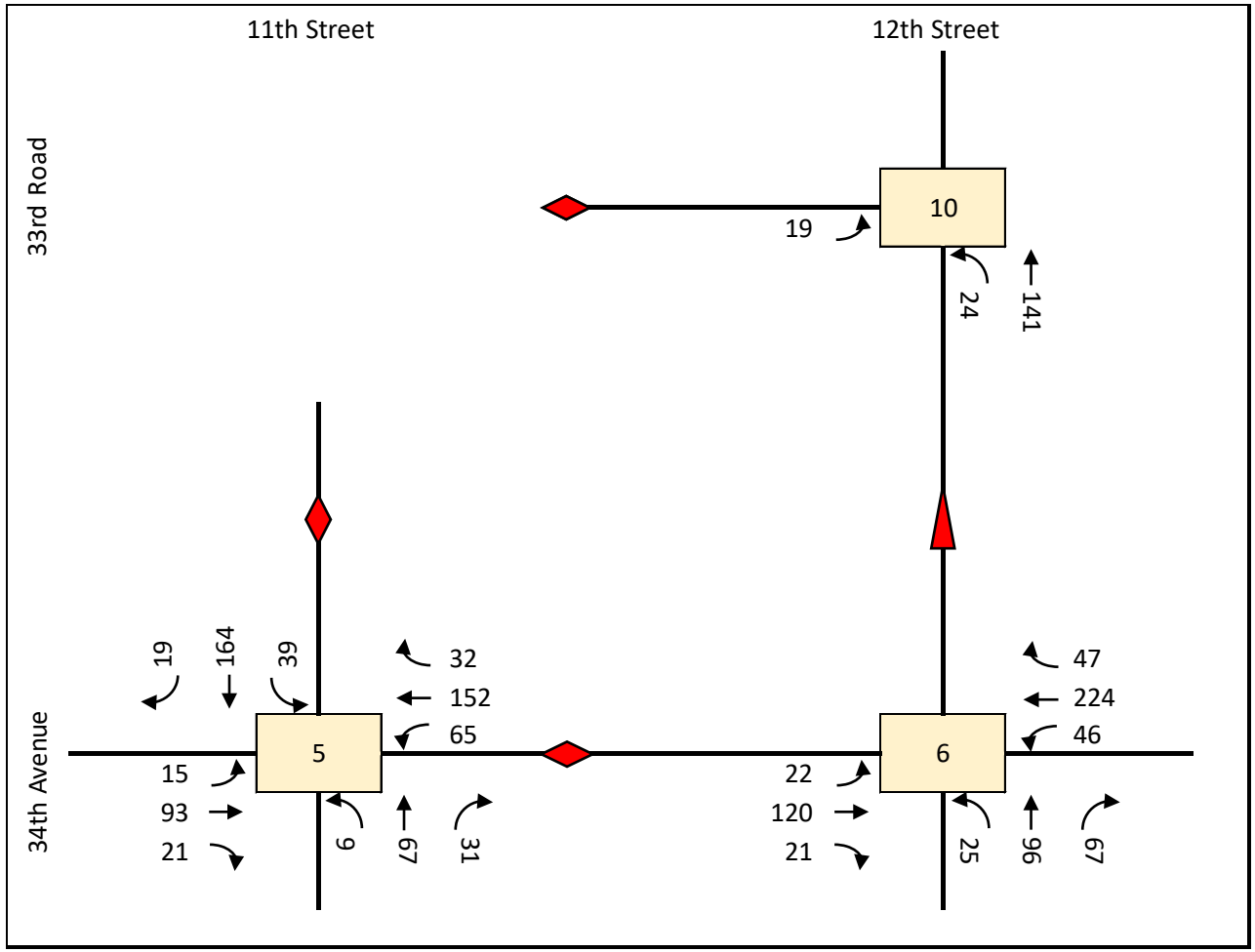

Figure 2.16-10: Existing Weekday Midday Vehicle Summary

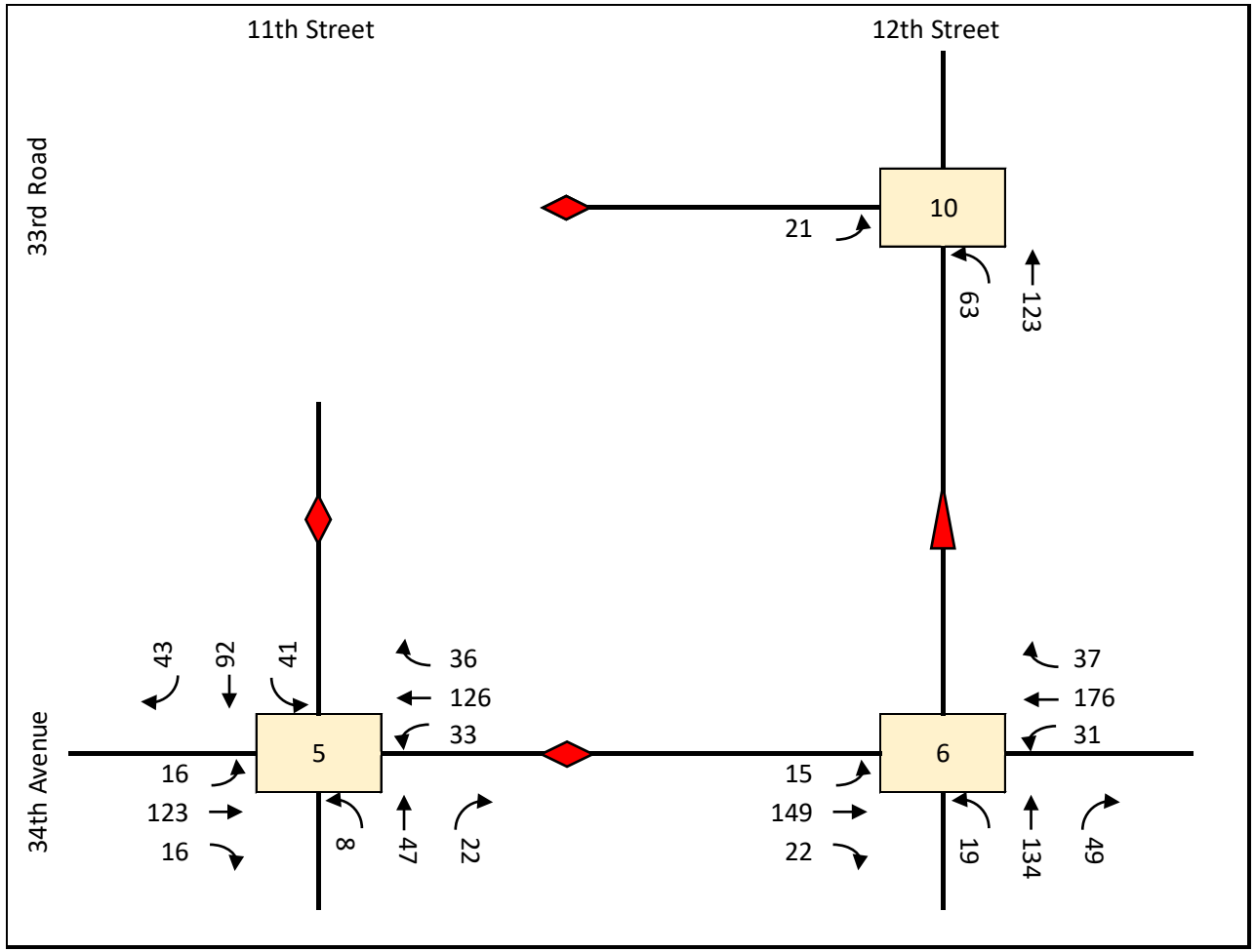

Figure 2.16-11: Existing Weekday PM Vehicle Summary

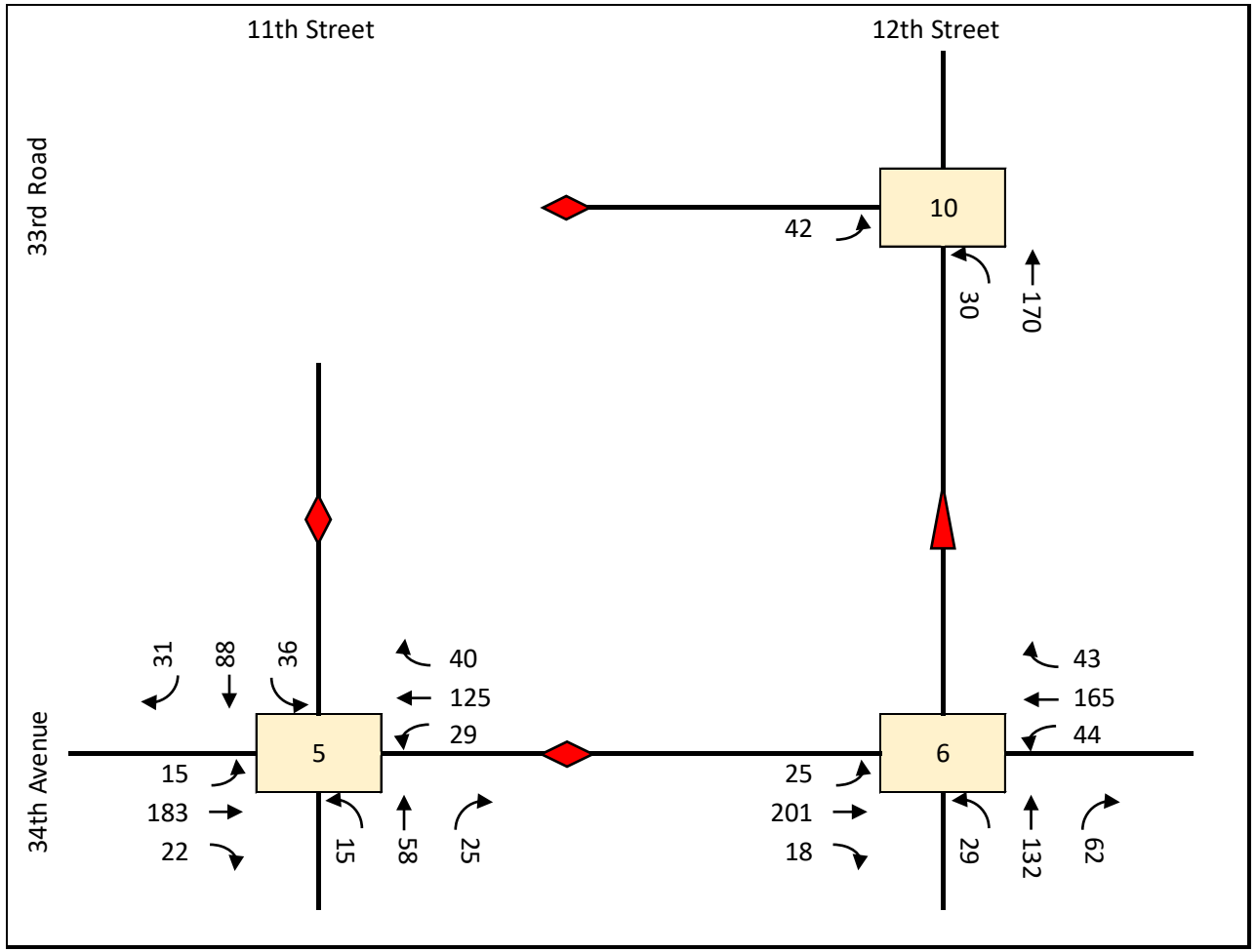

Figure 2.16-12: Existing Saturday Midday Vehicle Summary

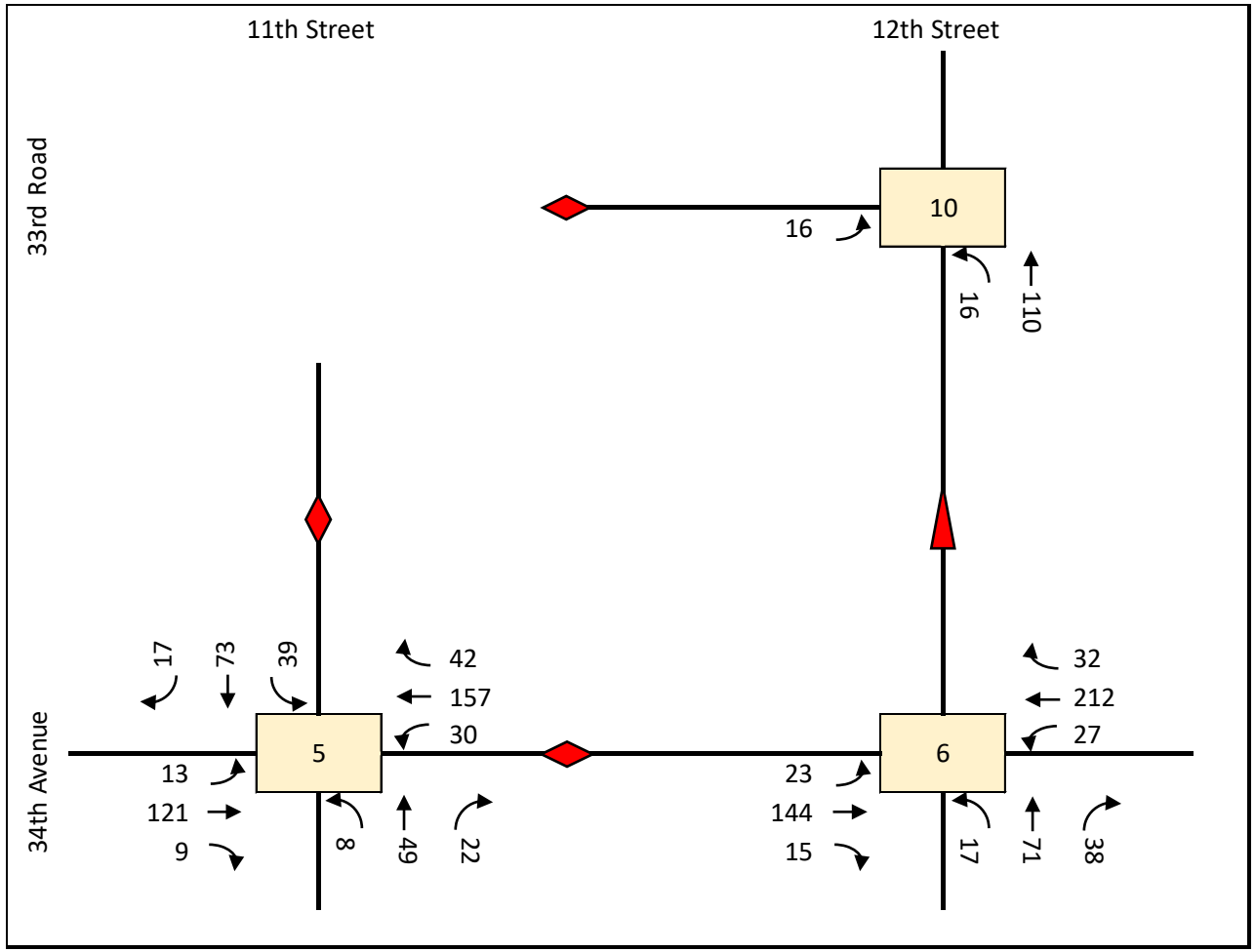

Table 2.16-15: Summary of Existing Traffic Analysis Results

LOS by Lane Group	Weekday AM	Weekday Midday	Weekday PM	Saturday Midday
LOS A/B/C	8	8	8	5
LOC D	1	1	0	0
LOS E	0	0	0	0
LOS F	0	0	0	0
Total	9	9	8	5
v/c ≥ 0.90	0	0	0	0

Table 2.16-16: Existing Weekday AM Intersection Level of Service

Weekday AM			Existing Condition		
Intersection	**Approach**	**Lane Group**	**v/c Ratio**	**Delay (sec/veh)**	**LOS**
34th Avenue and 11th Street	EB	LTR	0.26	10.7	B
	WB	LTR	0.45	13	B
	NB	LTR	0.2	10.1	B
	SB	LTR	0.43	12.9	B
	Int.			12.1	B
34th Avenue and 12th Street	EB	LTR	0.03	1.4	A
	WB	LTR	0.04	1.5	A
	NB	LTR	0.66	33.7	D
	Int.			10.7	B

Table 2.16-17: Existing Weekday Midday Intersection Level of Service

Weekday Midday			Existing Condition		
Intersection	**Approach**	**Lane Group**	**v/c Ratio**	**Delay (sec/veh)**	**LOS**
34th Avenue and 11th Street	EB	LTR	0.27	10.1	B
	WB	LTR	0.33	10.6	B
	NB	LTR	0.13	9.3	A
	SB	LTR	0.3	10.4	B
	Int.			10.3	B
34th Avenue and 12th Street	EB	LTR	0.02	0.8	A
	WB	LTR	0.03	1.3	A
	NB	LTR	0.59	27.3	D
	Int.			9.0	A

Table 2.16-18: Existing Weekday PM Intersection Level of Service

Weekday PM			Existing Condition		
Intersection	Approach	Lane Group	v/c Ratio	Delay (sec/veh)	LOS
34th Avenue and 11th Street	EB	LTR	0.36	11.1	B
	WB	LTR	0.34	10.9	B
	NB	LTR	0.19	9.7	A
	SB	LTR	0.28	10.6	B
	Int.			10.7	B
33rd Road and 12th Street	EB	L	0.08	10.6	B
	NB	LT	0.02	1.3	A
	Int.			3.0	A

Table 2.16-19: Existing Saturday Midday Intersection Level of Service

Saturday Midday			Existing Condition		
Intersection	Approach	Lane Group	v/c Ratio	Delay (sec/veh)	LOS
34th Avenue and 11th Street	EB	LTR	0.23	9.5	A
	WB	LTR	0.37	10.5	B
	NB	LTR	0.14	8.9	A
	SB	LTR	0.22	9.6	A
	Int.			9.8	A

2024 No-Action Conditions

The 2024 No-Action condition vehicular volumes were generated by combining vehicle trips from discrete No-Action projects in the study area that exceeded metrics in Table 13-1 of the *CEQR TM* with estimated 2024 vehicular volumes grown from the exiting conditions vehicular volumes using the *CEQR TM* annual background growth rates. No-Action volumes are shown below in **Figure 2.16-13** through **Figure 2.16-16**.

Level of Service

A summary of No-Action conditions traffic analysis results by lane group is presented in **Table 2.16-21**. Detailed on LOS, v/c ratios, and average delays are presented in **Table 2.16-20** - **Table 2.16-24**. Overall, the capacity analysis indicates that most of the study area's intersection approaches/lane groups operate acceptably at LOS D or better (≥35 seconds of delay for unsignalized intersections) for the peak hours. Approaches/lane groups are projected to deteriorate beyond LOS D under the 2024 No-Action Conditions are discussed below.

Lane Groups Projected to Deteriorate under No-Action Conditions

34th Avenue and 12th Street

- Northbound left-turn/through/right-turn movement would deteriorate to LOS E with a v/c ratio of 0.69 and 36.7 seconds of delay during the Weekday AM peak hour.

Figure 2.16-13: No-Action Weekday AM Vehicle Summary

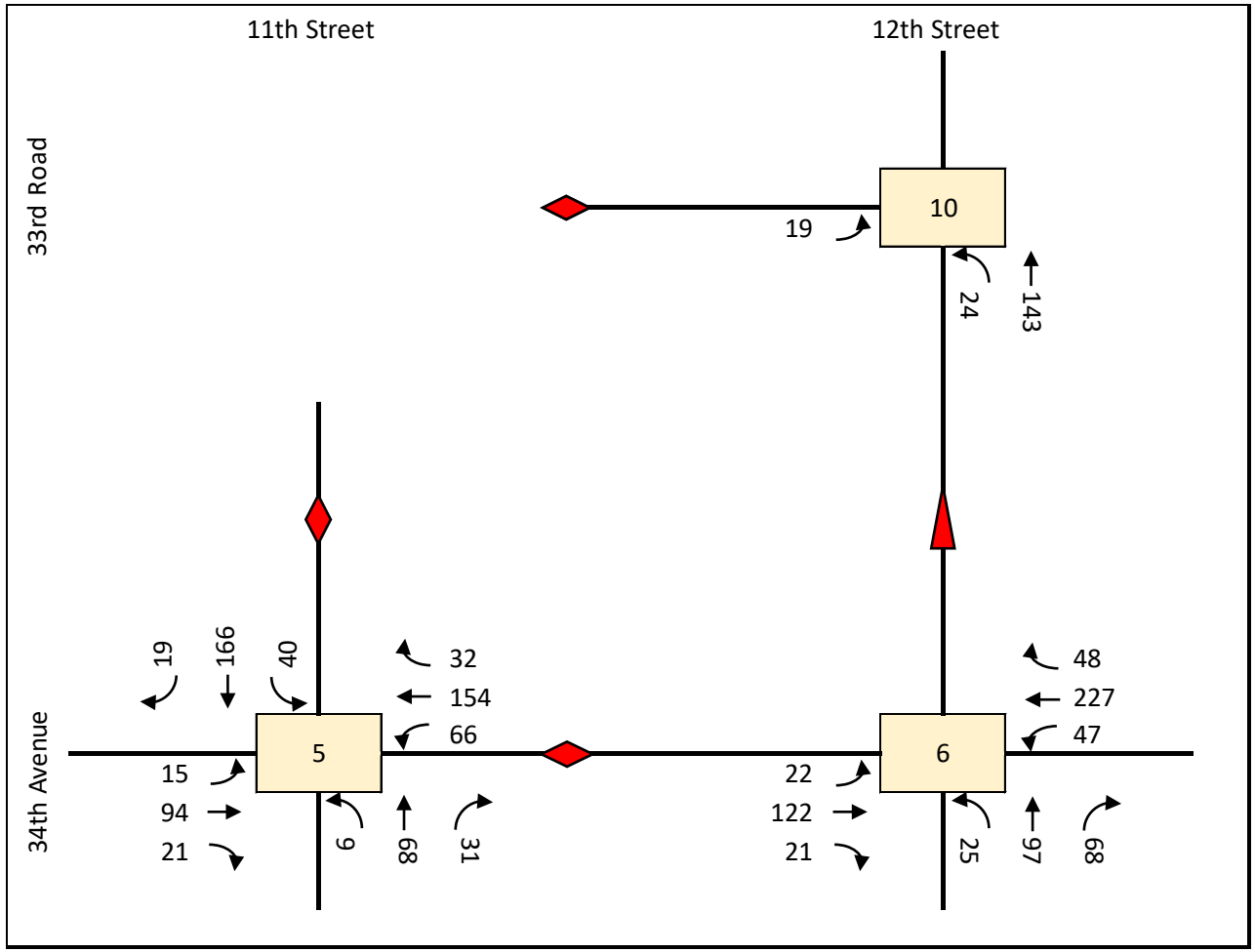

Figure 2.16-14: No-Action Weekday Midday Vehicle Summary

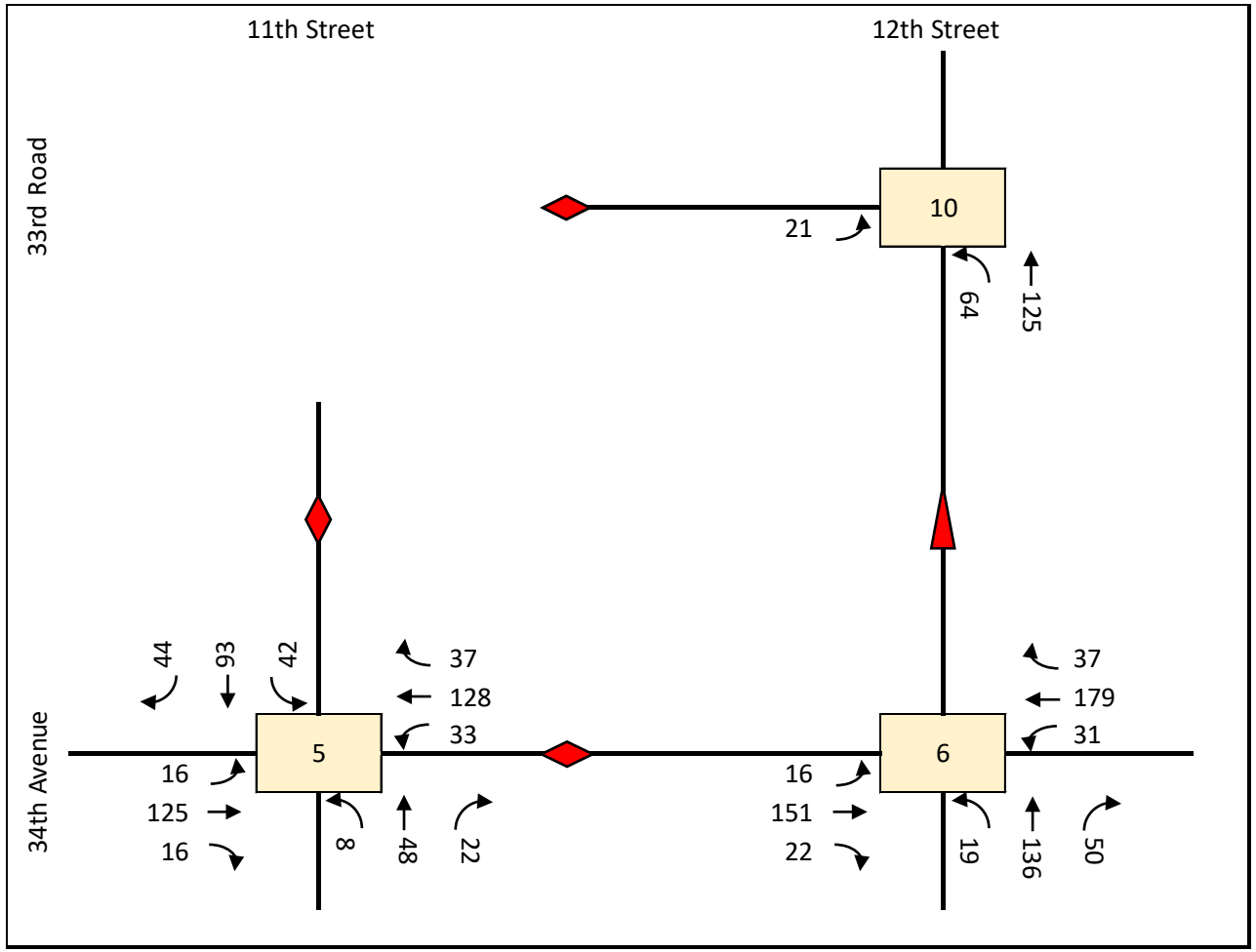

Figure 2.16-15: No-Action Weekday PM Vehicle Summary

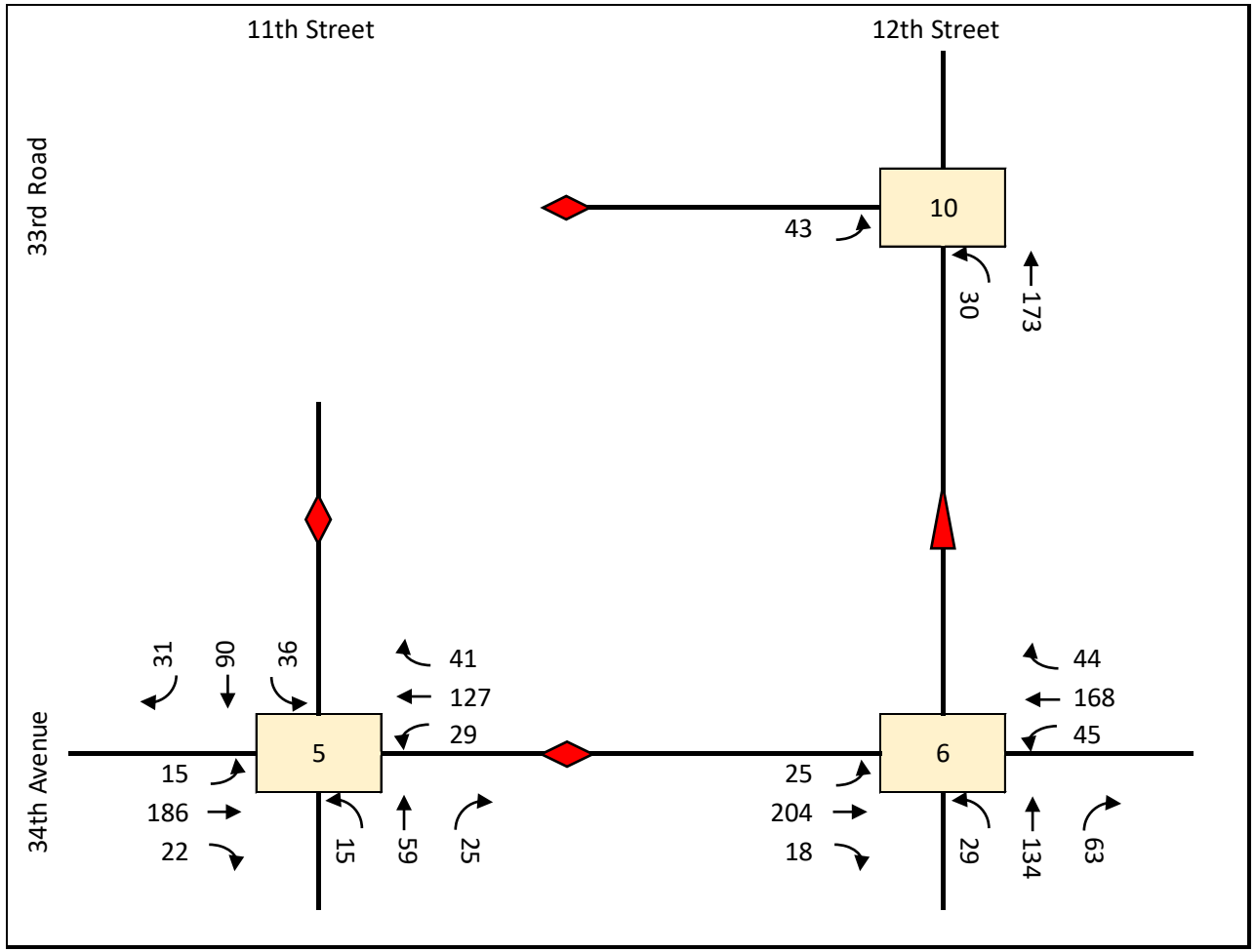

Figure 2.16-16: No-Action Saturday Midday Vehicle Summary

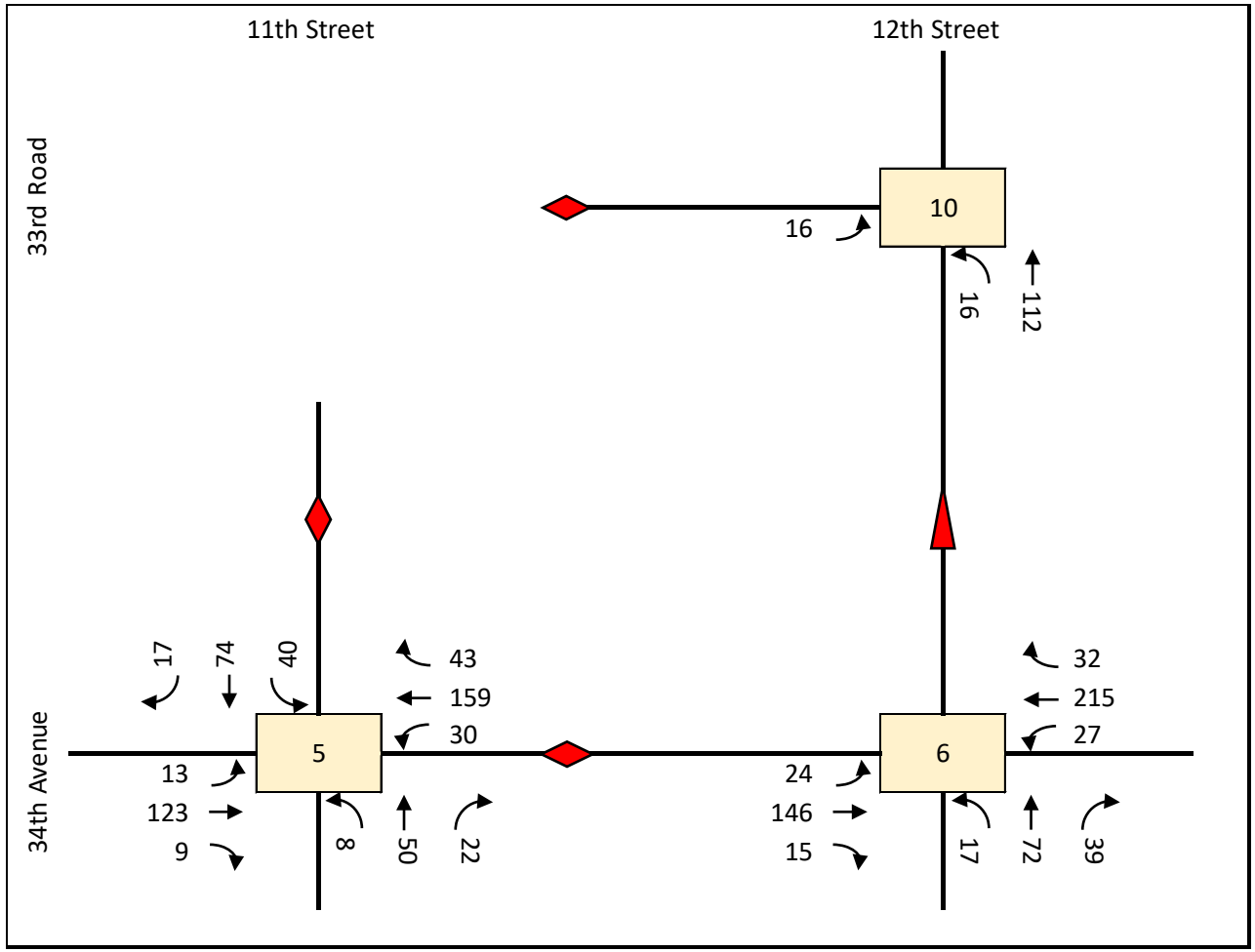

Table 2.16-20: Summary of No-Action Traffic Analysis Results

LOS by Lane Group	Weekday AM	Weekday Midday	Weekday PM	Saturday Midday
LOS A/B/C	8	8	8	5
LOC D	0	1	0	0
LOS E	1	0	0	0
LOS F	0	0	0	0
Total	9	9	8	5
v/c ≥ 0.90	0	0	0	0

Table 2.16-21: No-Action Weekday AM Intersection Level of Service

Weekday AM			Existing Condition			No-Action Condition		
Intersection	Approach	Lane Group	v/c Ratio	Delay (sec/veh)	LOS	v/c Ratio	Delay (sec/veh)	LOS
34th Avenue and 11th Street	EB	LTR	0.26	10.7	B	0.26	10.8	B
	WB	LTR	0.45	13	B	0.46	13.1	B
	NB	LTR	0.2	10.1	B	0.2	10.2	B
	SB	LTR	0.43	12.9	B	0.44	13	B
	Int.			12.1	B		12.2	B
34th Avenue and 12th Street	EB	LTR	0.03	1.4	A	0.03	1.4	A
	WB	LTR	0.04	1.5	A	0.05	1.5	A
	NB	LTR	0.66	33.7	D	0.69	36.7	E
	Int.			10.7	B		11.5	B

Table 2.16-22: No-Action Weekday Midday Intersection Level of Service

Weekday Midday			Existing Condition			No-Action Condition		
Intersection	Approach	Lane Group	v/c Ratio	Delay (sec/veh)	LOS	v/c Ratio	Delay (sec/veh)	LOS
34th Avenue and 11th Street	EB	LTR	0.27	10.1	B	0.27	10.2	B
	WB	LTR	0.33	10.6	B	0.34	10.6	B
	NB	LTR	0.13	9.3	A	0.14	9.3	A
	SB	LTR	0.3	10.4	B	0.31	10.5	B
	Int.			10.3	B		10.3	B
34th Avenue and 12th Street	EB	LTR	0.02	0.8	A	0.02	0.9	A
	WB	LTR	0.03	1.3	A	0.03	1.3	A
	NB	LTR	0.59	27.3	D	0.62	29.7	D
	Int.			9	A		9.7	A

Table 2.16-23: No-Action Weekday PM Intersection Level of Service

Weekday PM			Existing Condition			No-Action Condition		
Intersection	Approach	Lane Group	v/c Ratio	Delay (sec/veh)	LOS	v/c Ratio	Delay (sec/veh)	LOS
34th Avenue and 11th Street	EB	LTR	0.36	11.1	B	0.37	11.2	B
	WB	LTR	0.34	10.9	B	0.35	11	B
	NB	LTR	0.19	9.7	A	0.19	9.8	A
	SB	LTR	0.28	10.6	B	0.28	10.7	B
	Int.			10.7	B		10.8	B
33rd Road and 12th Street	EB	L	0.08	10.6	B	0.11	12.9	B
	NB	LT	0.02	1.3	A	0.03	1.5	A
	Int.			3	A		3.6	A

Table 2.16-24: No-Action Saturday Midday Intersection Level of Service

Saturday Midday			Existing Condition			No-Action Condition		
Intersection	Approach	Lane Group	v/c Ratio	Delay (sec/veh)	LOS	v/c Ratio	Delay (sec/veh)	LOS
34th Avenue and 11th Street	EB	LTR	0.23	9.5	A	0.23	9.6	A
	WB	LTR	0.37	10.5	B	0.38	10.6	B
	NB	LTR	0.14	8.9	A	0.14	9	A
	SB	LTR	0.22	9.6	A	0.22	9.6	A
	Int.			9.8	A		9.9	A

2024 With-Action Conditions

The 2024 With-Action condition vehicular volumes were generated by combining the 2024 No-Action vehicle volumes and the incremental project-generated trips during this scenario. With-Action volumes are shown below in **Figure 2.16-17** through **Figure 2.16-20**.

Level of Service

A summary of With-Action conditions traffic analysis results by lane group is presented in **Table 2.16-25**. Detailed on LOS, v/c ratios, and average delays are presented in **Table 2.16-26** through **Table 2.16-29** for unsignalized intersections. As discussed below, significant adverse traffic impacts were identified at one approach/lane group during the Weekday AM and Weekday Midday peak hours.

Impacted Approaches/Lane Groups

34th Avenue and 12th Street (NB)

- Northbound left-turn/through/right-turn would deteriorate from LOS E with a v/c ratio of 0.69 and 36.7 sec/veh of delay to LOS F with a v/c ratio of 1.0 and 133.6 sec/veh of delay during the Weekday AM peak hour.
- Overall the intersection would deteriorate from LOS B and 11.5 sec/veh of delay to LOS E and 40.4 sec/veh of delay during the Weekday AM peak hour.

- Northbound left-turn/through/right-turn would deteriorate from LOS D with a v/c ratio of 0.62 and 29.7 sec/veh of delay to LOS F with a v/c ratio of 1.33 and 231.3 sec/veh of delay during the Weekday Midday peak hour.
- Overall the intersection would deteriorate from LOS A and 9.7 sec/veh of delay to LOS F and 68.8 sec/veh of delay during the Weekday Midday peak hour.

Figure 2.16-17: With-Action Weekday AM Vehicle Summary

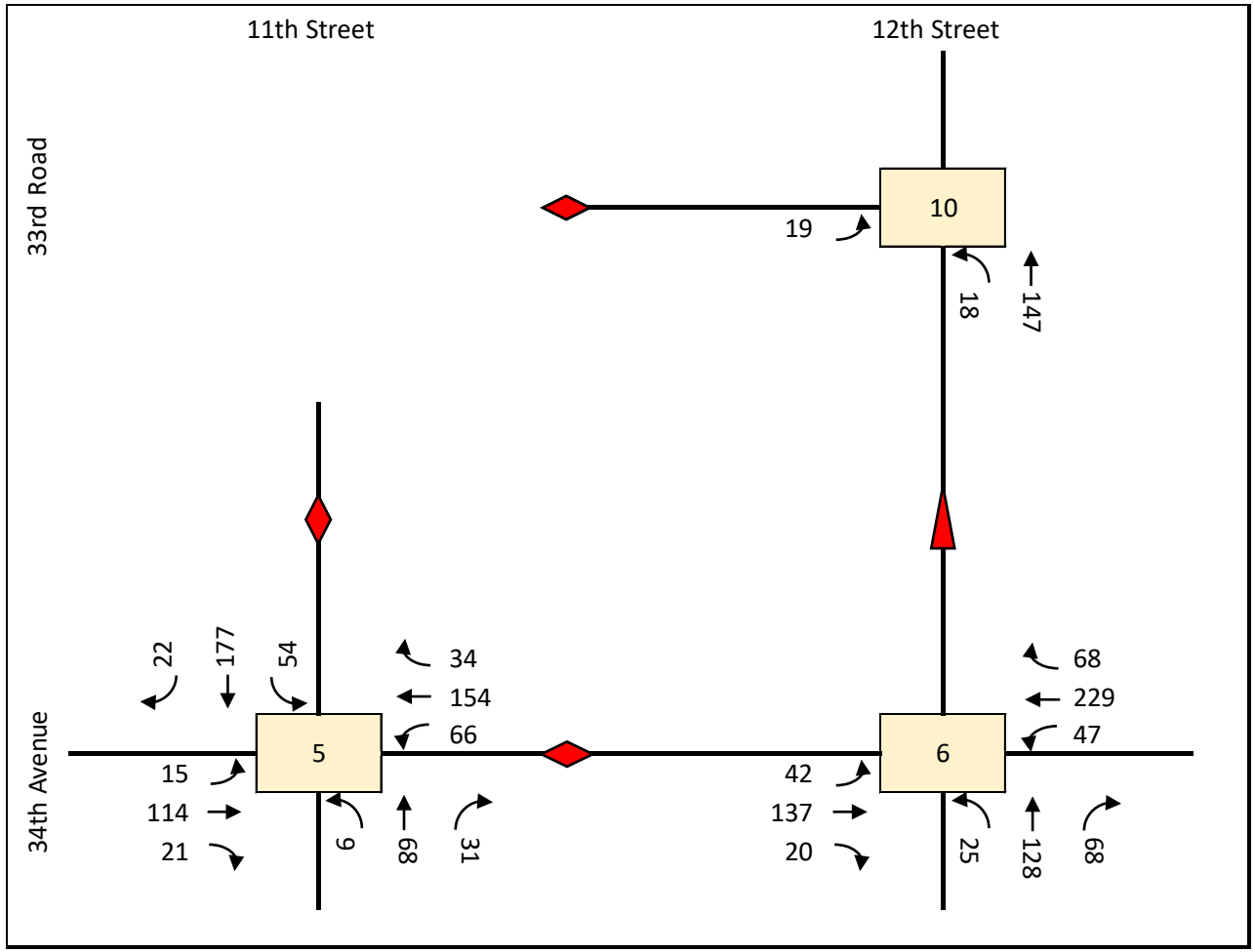

Figure 2.16-18: With-Action Weekday Midday Vehicle Summary

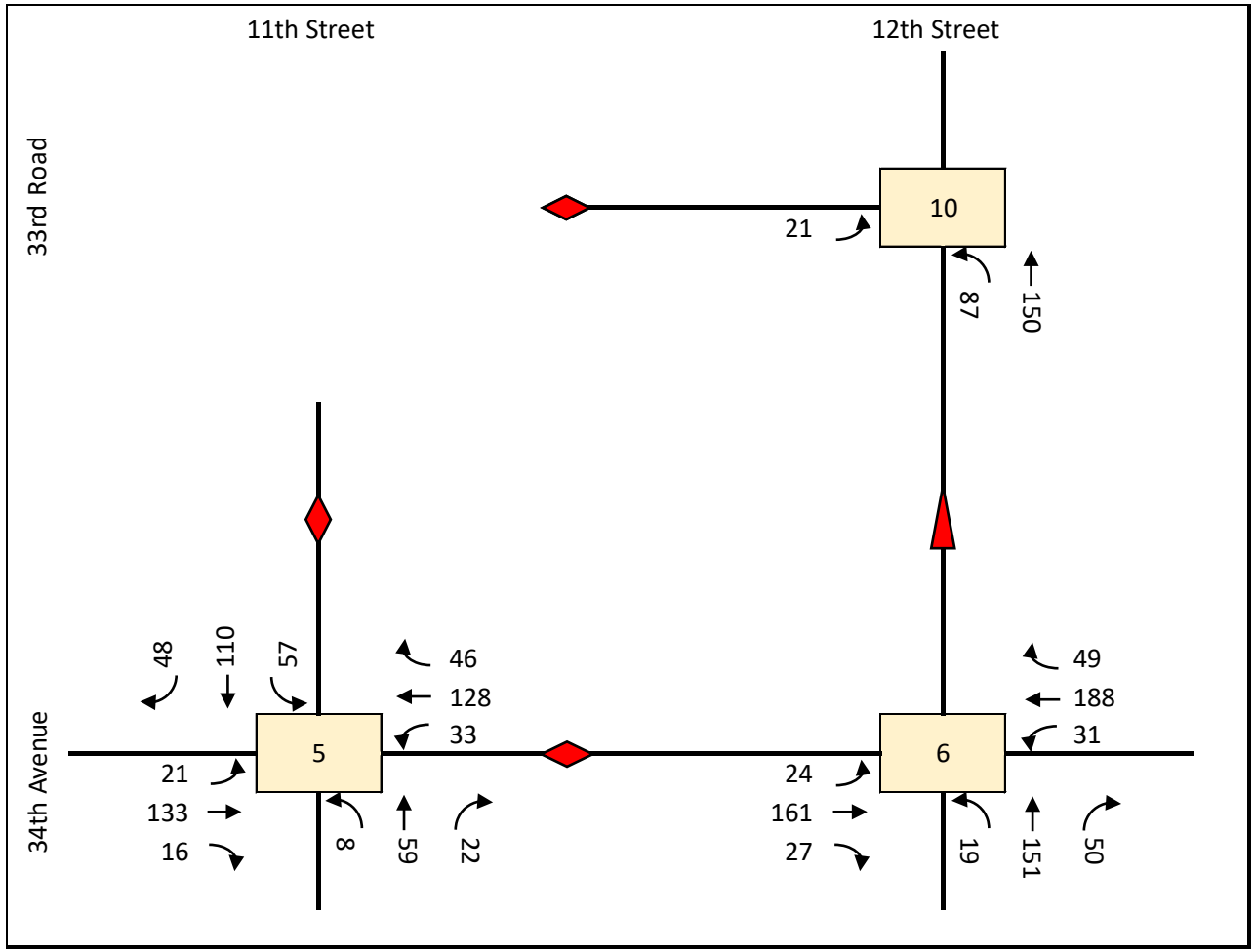

Figure 2.16-19: With-Action Weekday PM Vehicle Summary

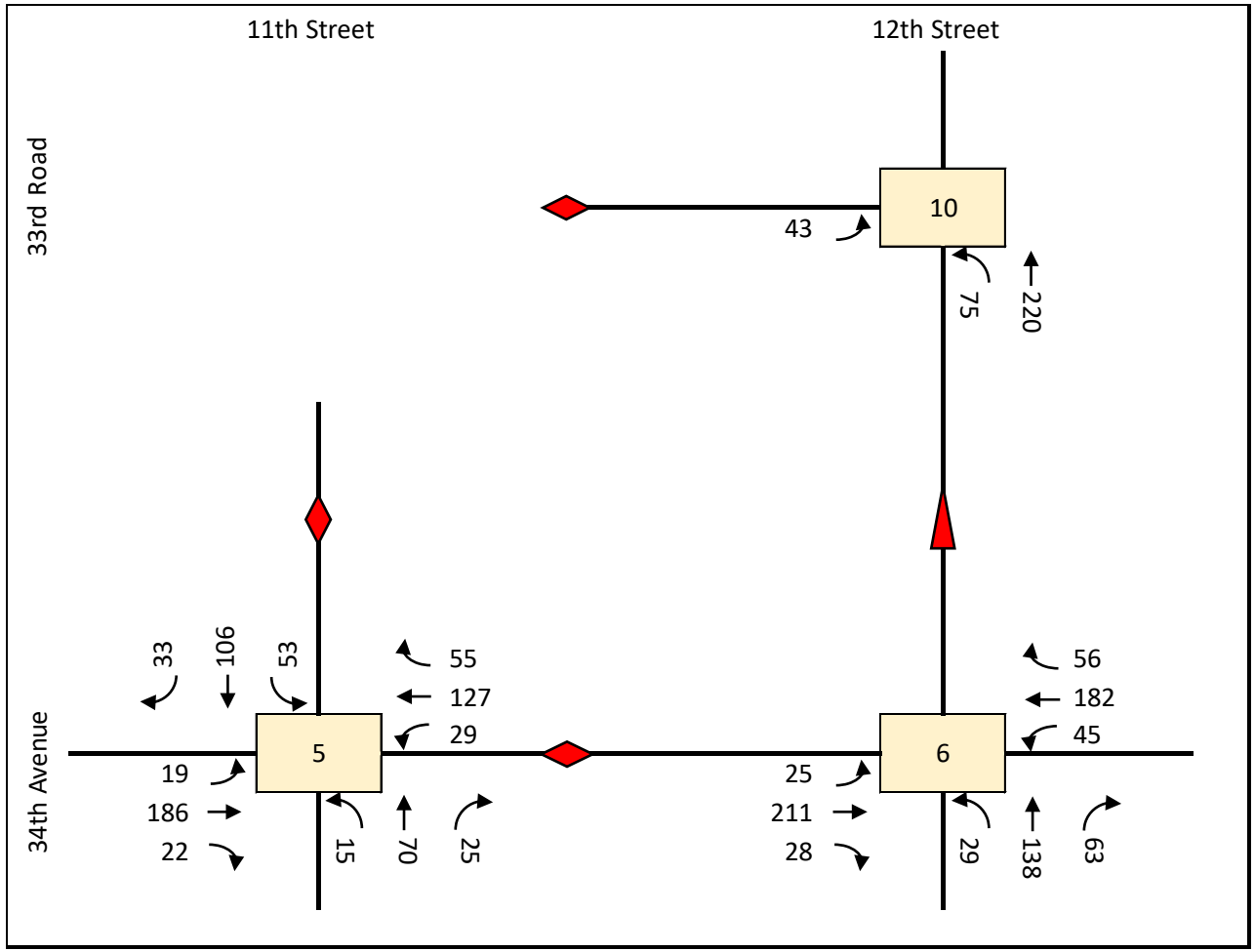

Figure 2.16-20: With-Action Saturday Midday Vehicle Summary

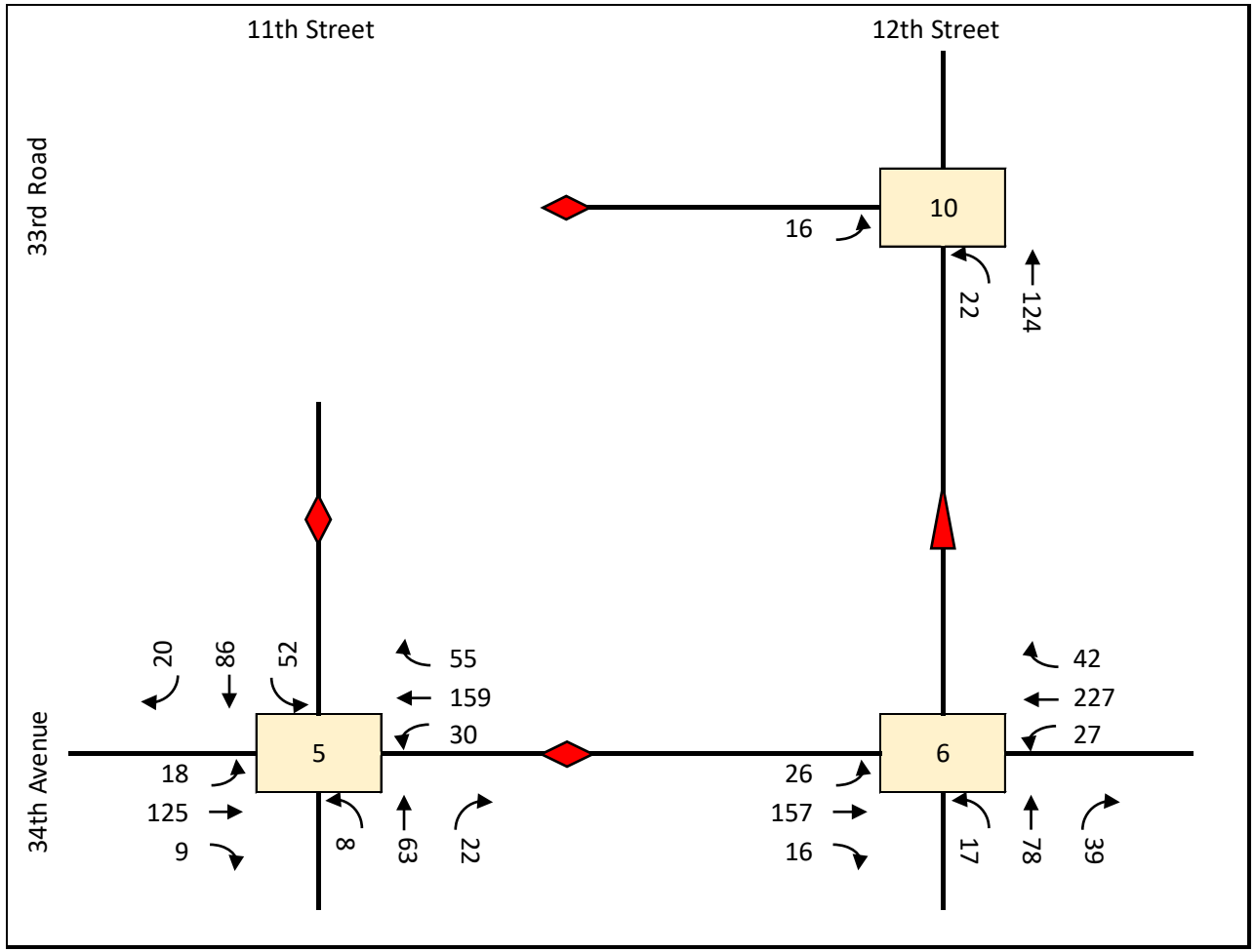

Table 2.16-25: Summary of With-Action Traffic Analysis Results

LOS by Lane Group	Weekday AM	Weekday Midday	Weekday PM	Saturday Midday
LOS A/B/C	7	7	8	5
LOC D	0	0	0	0
LOS E	1	0	0	0
LOS F	1	2	0	0
Total	9	9	8	5
v/c ≥ 0.90	1	0	0	0

Table 2.16-26: With-Action Weekday AM Intersection Level of Service

Weekday AM			No-Action Condition			With-Action Condition		
Intersection	**Approach**	**Lane Group**	**v/c Ratio**	**Delay (sec/veh)**	**LOS**	**v/c Ratio**	**Delay (sec/veh)**	**LOS**
34th Avenue and 11th Street	EB	LTR	0.26	10.8	B	0.3	11.5	B
	WB	LTR	0.46	13.1	B	0.48	13.8	B
	NB	LTR	0.2	10.2	B	0.21	10.5	B
	SB	LTR	0.44	13	B	0.5	14.6	B
	Int.			12.2	B		13.2	B
34th Avenue and 12th Street	EB	LTR	0.03	1.4	A	0.05	2.3	A
	WB	LTR	0.05	1.5	A	0.05	1.6	A
	NB	LTR	0.69	36.7	E	**1.1**	**133.6**	**F**
	Int.			11.5	B		**40.4**	**E**

*highlighted cells denote significant adverse impacts

Table 2.16-27: With-Action Weekday Midday Intersection Level of Service

Weekday Midday			No-Action Condition			With-Action Condition		
Intersection	**Approach**	**Lane Group**	**v/c Ratio**	**Delay (sec/veh)**	**LOS**	**v/c Ratio**	**Delay (sec/veh)**	**LOS**
34th Avenue and 11th Street	EB	LTR	0.27	10.2	B	0.3	10.8	B
	WB	LTR	0.34	10.6	B	0.37	11.3	B
	NB	LTR	0.14	9.3	A	0.16	9.8	A
	SB	LTR	0.31	10.5	B	0.38	11.6	B
	Int.			10.3	B		11.1	B
34th Avenue and 12th Street	EB	LTR	0.02	0.9	A	0.03	1.2	A
	WB	LTR	0.03	1.3	A	0.04	1.5	A
	NB	LTR	0.62	29.7	D	**1.33**	**231.3**	**F**
	Int.			9.7	A		**68.8**	**F**

*highlighted cells denote significant adverse impacts

Table 2.16-28: With-Action Weekday PM Intersection Level of Service

Weekday PM			No-Action Condition			With-Action Condition		
Intersection	Approach	Lane Group	v/c Ratio	Delay (sec/veh)	LOS	v/c Ratio	Delay (sec/veh)	LOS
34th Avenue and 11th Street	EB	LTR	0.37	11.2	B	0.39	11.9	B
	WB	LTR	0.35	11	B	0.39	11.8	B
	NB	LTR	0.19	9.8	A	0.22	10.4	B
	SB	LTR	0.28	10.7	B	0.35	11.7	B
	Int.			10.8	B		11.6	B
33rd Road and 12th Street	EB	L	0.11	12.9	B	0.19	20.2	C
	NB	LT	0.03	1.5	A	0.09	3.1	A
	Int.			3.6	A		5.3	A

*highlighted cells denote potential significant adverse impacts

Table 2.16-29: With-Action Saturday Midday Intersection Level of Service

Saturday Midday			No-Action Condition			With-Action Condition		
Intersection	Approach	Lane Group	v/c Ratio	Delay (sec/veh)	LOS	v/c Ratio	Delay (sec/veh)	LOS
34th Avenue and 11th Street	EB	LTR	0.23	9.6	A	0.25	10	B
	WB	LTR	0.38	10.6	B	0.41	11.4	B
	NB	LTR	0.14	9	A	0.17	9.5	A
	SB	LTR	0.22	9.6	A	0.27	10.3	B
	Int.			9.9	A		10.5	B

*highlighted cells denote significant adverse impacts

Detailed Pedestrian Analysis

As described above, Level 1 and 2 screening analyses were prepared to identify the pedestrian elements that warrant a detailed analysis. Based on the assignment of pedestrian trips, two sidewalks were selected during the weekday Midday peak hour and one during the Weekday PM peak hour. Inventories of street geometry, traffic controls, bus stops, parking regulations/activities, and signal timing were recorded to provide appropriate inputs for the operational analyses.

2021 Existing Conditions

Pedestrian data was collected in October 2021 in accordance with procedures outlined in the *CEQR TM* during the weekday hours of 7:00am – 10:00am, 11:00am – 2:00pm, and 4:00pm – 6:00pm as well as 11:00am – 2:00pm on Saturdays. Volumes were summarized by 15min periods. Inventories of pedestrian geometry, parking regulations/activities, and signal timing were recorded to provide appropriate inputs for the operational analyses. Given that data was collected during the COVID-19 pandemic, adjustment factors provided by NYC DOT were applied to existing vehicular and pedestrian counts. These factors are displayed above in **Table 2.16-14.**

The 2021 Existing peak hour pedestrian volumes are shown in **Figure 2.16-21** – **Figure 2.16-22**. Peak hours were determined by review of the background pedestrian volumes throughout the network. Peak hour factors were determined based on volume data in 15min increments for these time periods. A summary of the Existing conditions for sidewalks is shown in **Table 2.16-30.** As this table shows, the pedestrian elements being studied currently operate at a favorable LOS A.

Figure 2.16-21: Weekday Midday Existing Pedestrian Summary

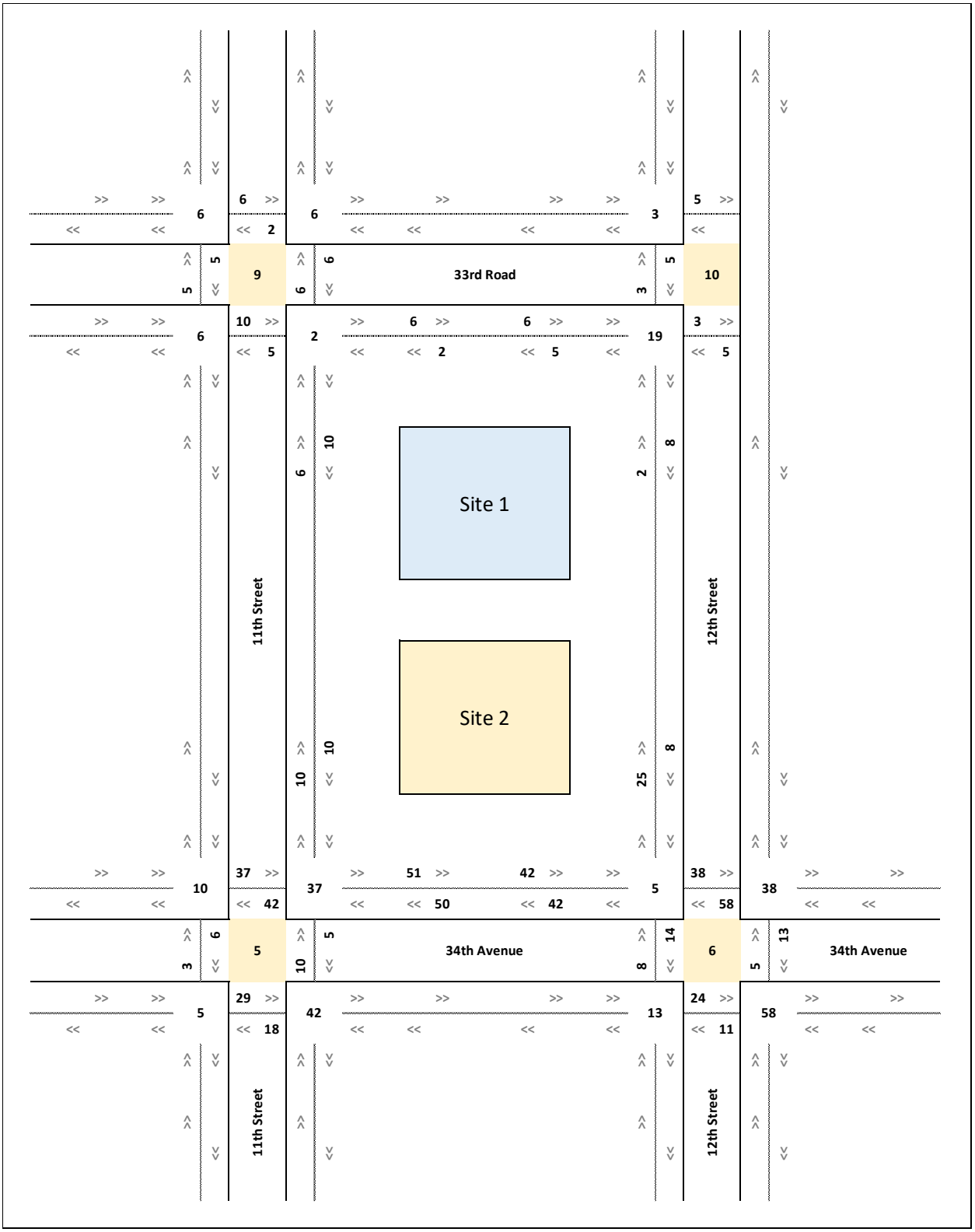

Figure 2.16-22: Weekday PM Existing Pedestrian Summary

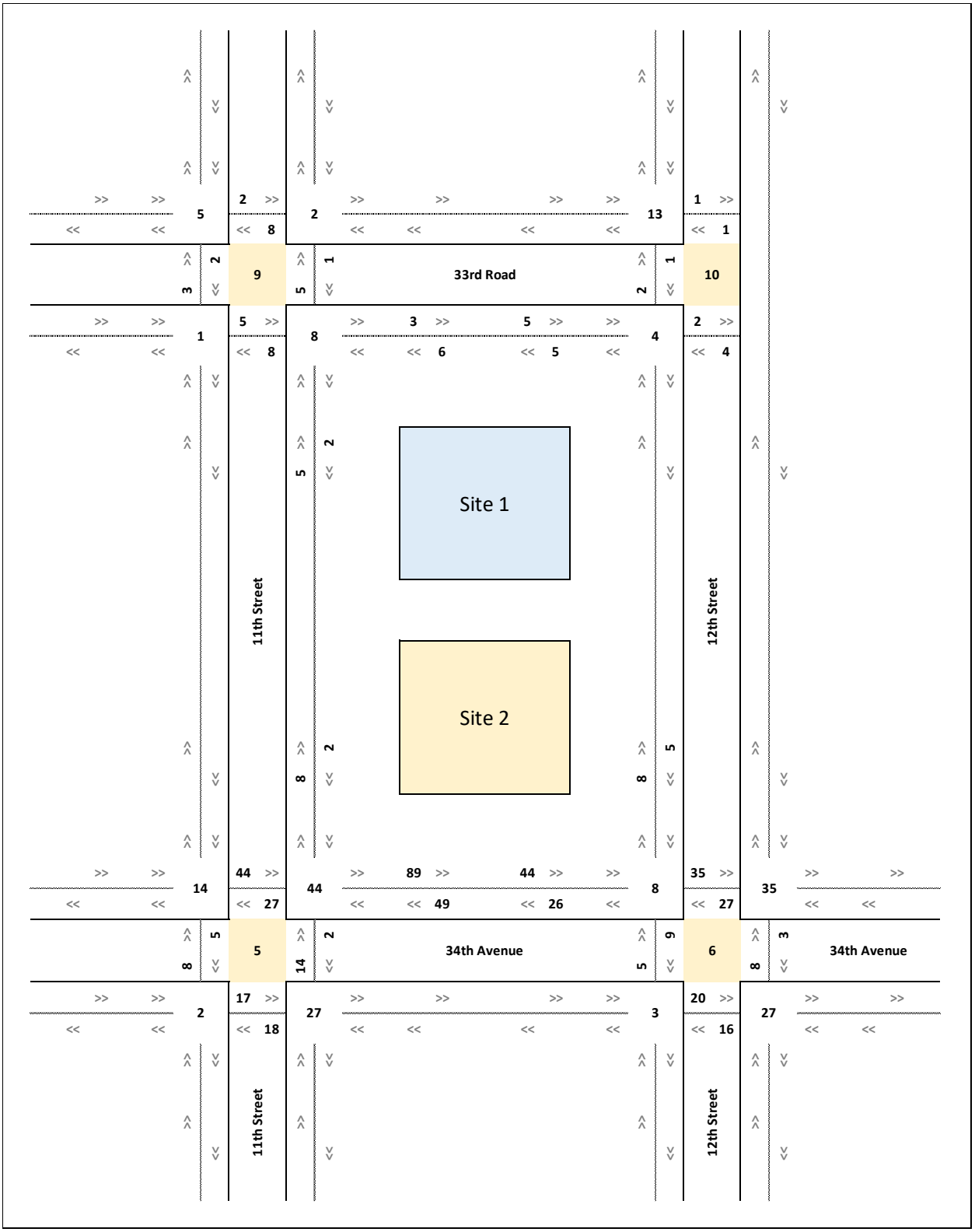

Table 2.16-30: Existing Sidewalk Level of Service

Weekday Midday	sf/ped	LOS
North side of 34th Avenue between Site Entrance/Exit and 12th Street	1,511	A
East side of 11th Street between Q 104 Bus Stop and 34th Avenue	1,984	A
Weekday PM	**sf/ped**	**LOS**
East side of 11th Street between Q 104 Bus Stop and 34th Avenue	3,544	A

2024 Future No-Action Conditions

The 2024 No-Action condition pedestrian volumes were generated by combining pedestrian trips from discrete No-Action projects in the study area that exceeded metrics in Table 13-1 of the *CEQR TM* with estimated 2024 pedestrian volumes grown from the exiting conditions pedestrian volumes using the *CEQR TM* annual background growth rates.

The 2024 No-Action peak hour pedestrian volumes are shown in **Figure 2.16-23 - Figure 2.16-24**. A summary of the No-Action condition pedestrian analysis results for sidewalks are shown in **Table 2.16-31**. As this table shows, the pedestrian elements being studied are projected to operate at a favorable LOS A during the 2024 No-Action condition.

Figure 2.16-23: Weekday Midday No-Action Pedestrian Summary

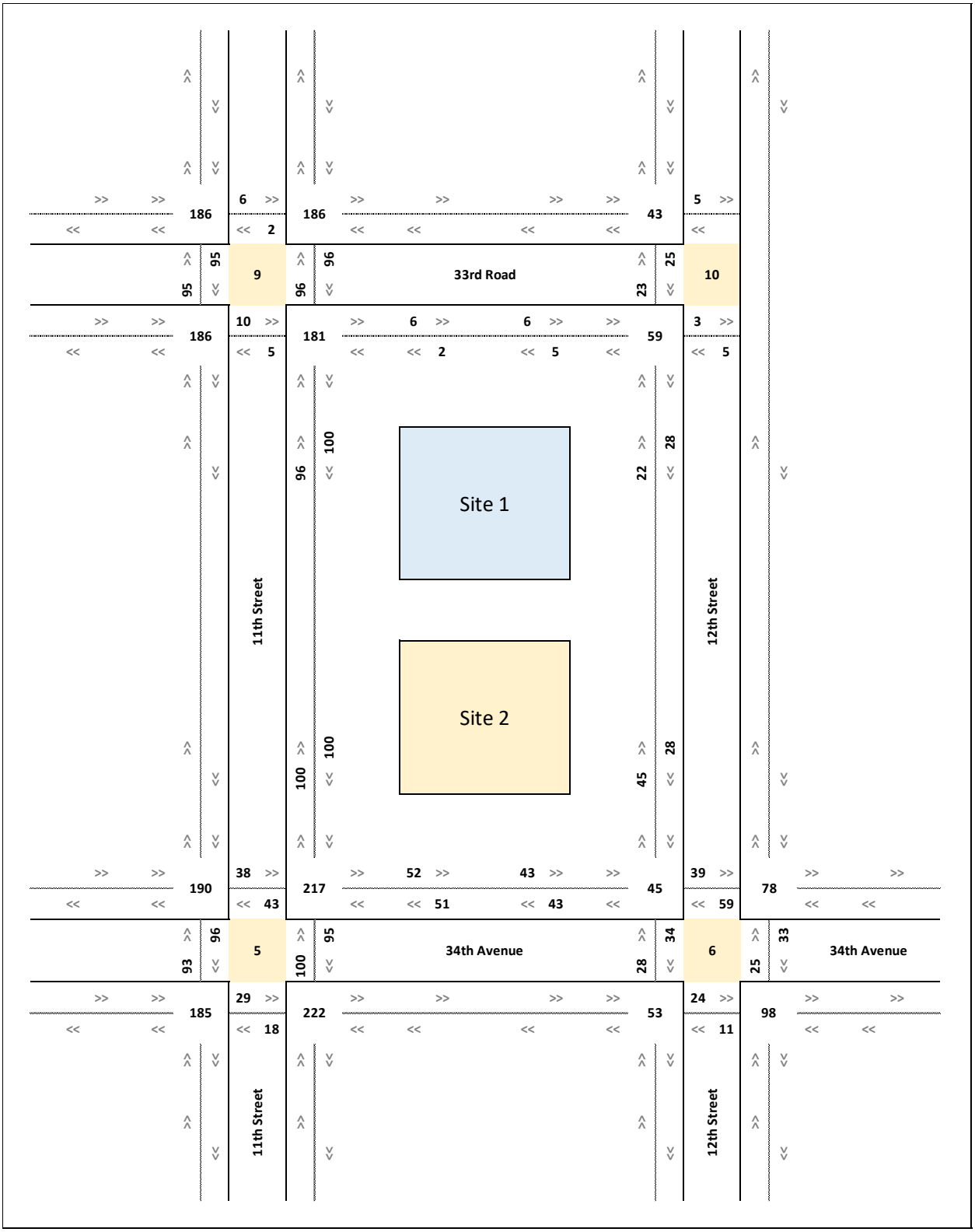

Figure 2.16-24: Weekday PM No-Action Pedestrian Summary

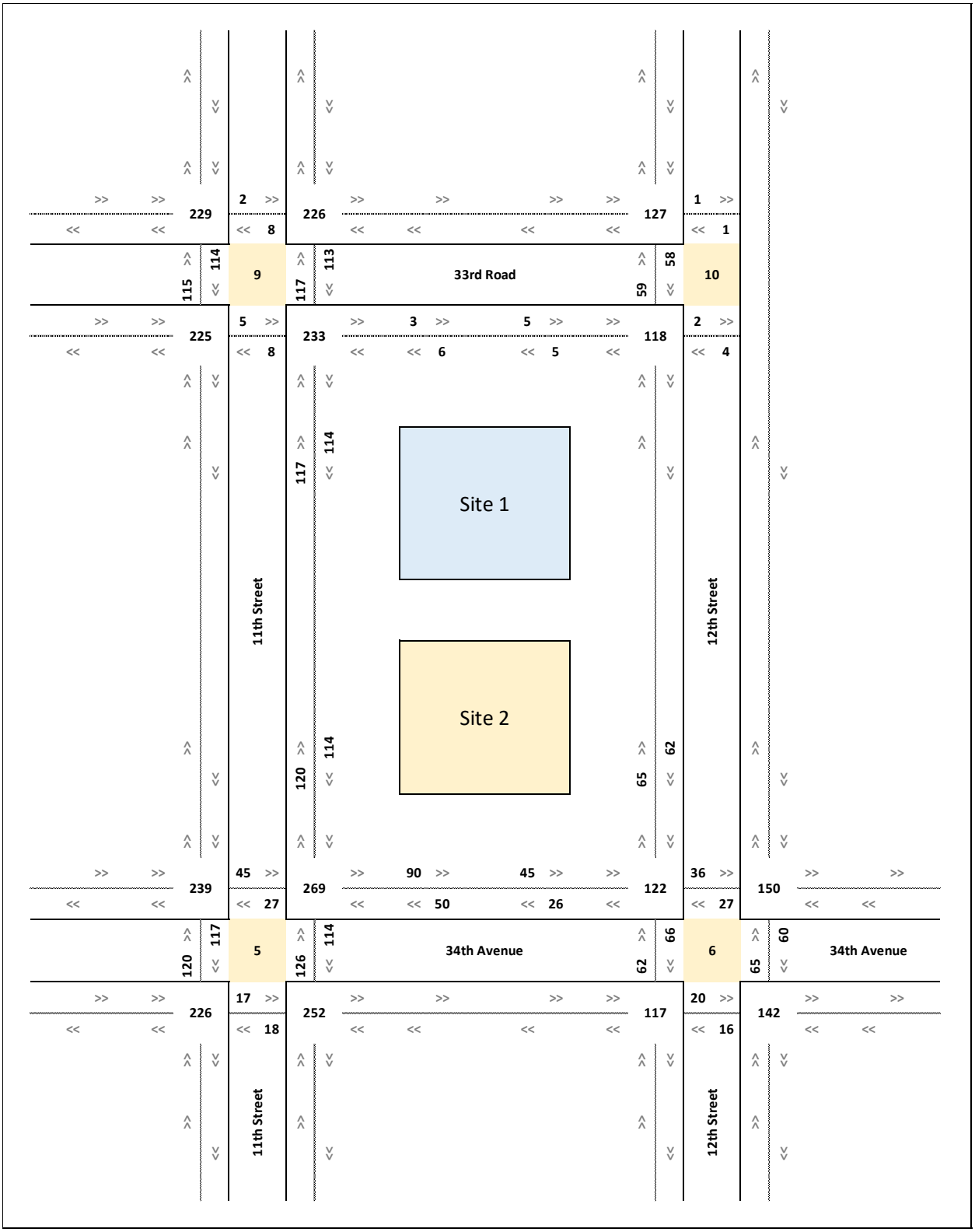

Table 2.16-31: No-Action Sidewalk Level of Service

Weekday Midday	Existing Conditions		No-Action Conditions	
	sf/ped	LOS	sf/ped	LOS
North side of 34th Avenue between Site Entrance/Exit and 12th Street	1,511	A	1,476	A
East side of 11th Street between Q 104 Bus Stop and 34th Avenue	1,984	A	170	A
Weekday PM	**Existing Conditions**		**No-Action Conditions**	
	sf/ped	**LOS**	**sf/ped**	**LOS**
East side of 11th Street between Q 104 Bus Stop and 34th Avenue	3,544	A	3,402	A

2024 With-Action Conditions

The 2024 With-Action condition pedestrian volumes were generated by combining the 2024 No-Action pedestrian volumes and the incremental project generated trips during this scenario.

The 2024 With-Action peak hour pedestrian volumes are shown in **Figure 2.16-25 - Figure 2.16-26.** A summary of the With-Action condition pedestrian analysis results for sidewalks are shown in **Table 2.16-32.** As shown below, no significant adverse impacts are projected as a result of the Proposed Development as all pedestrian elements are projected to operate at LOS A.

Figure 2.16-25: Weekday AM With-Action Pedestrian Summary

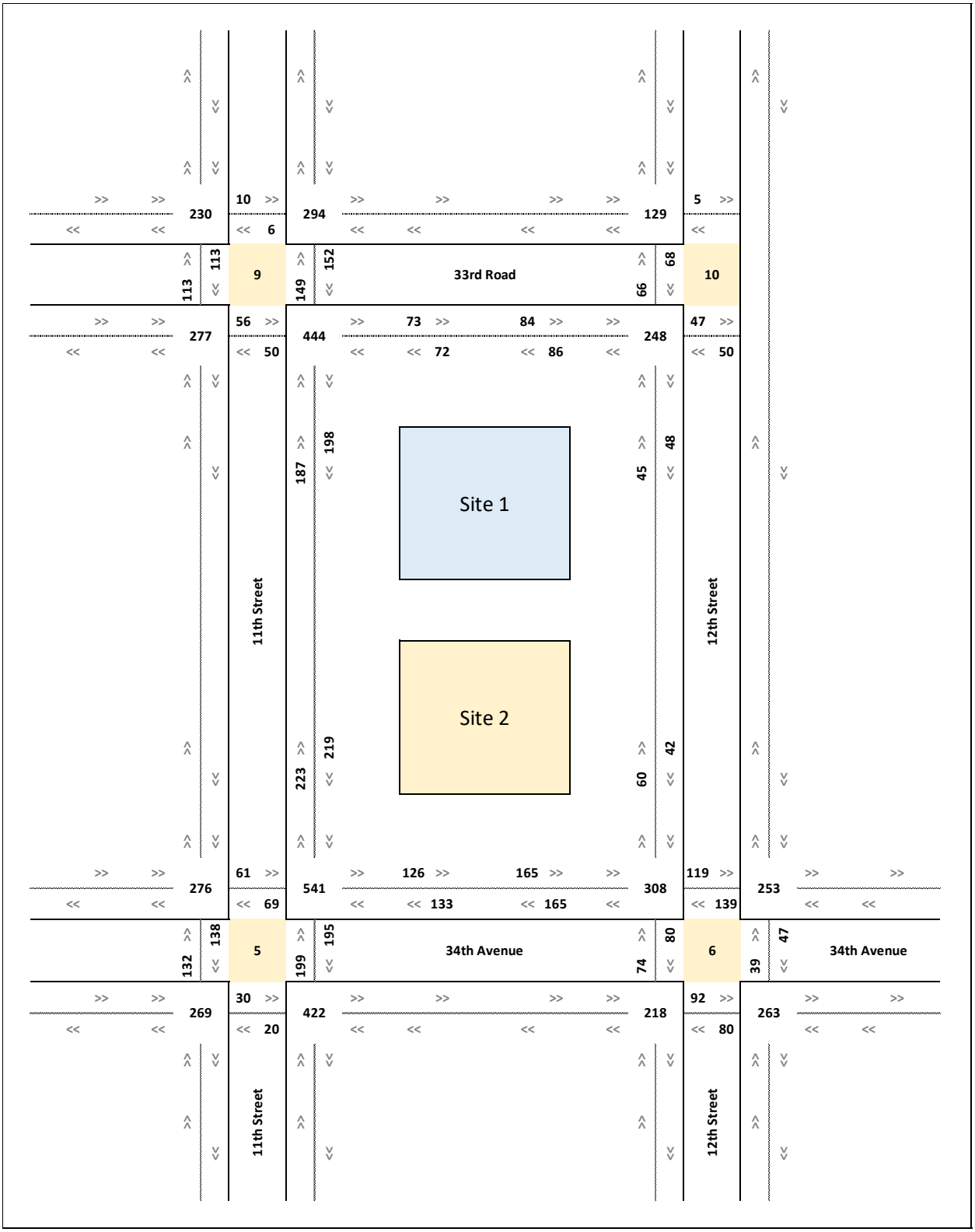

Figure 2.16-26: Weekday PM With-Action Pedestrian Summary

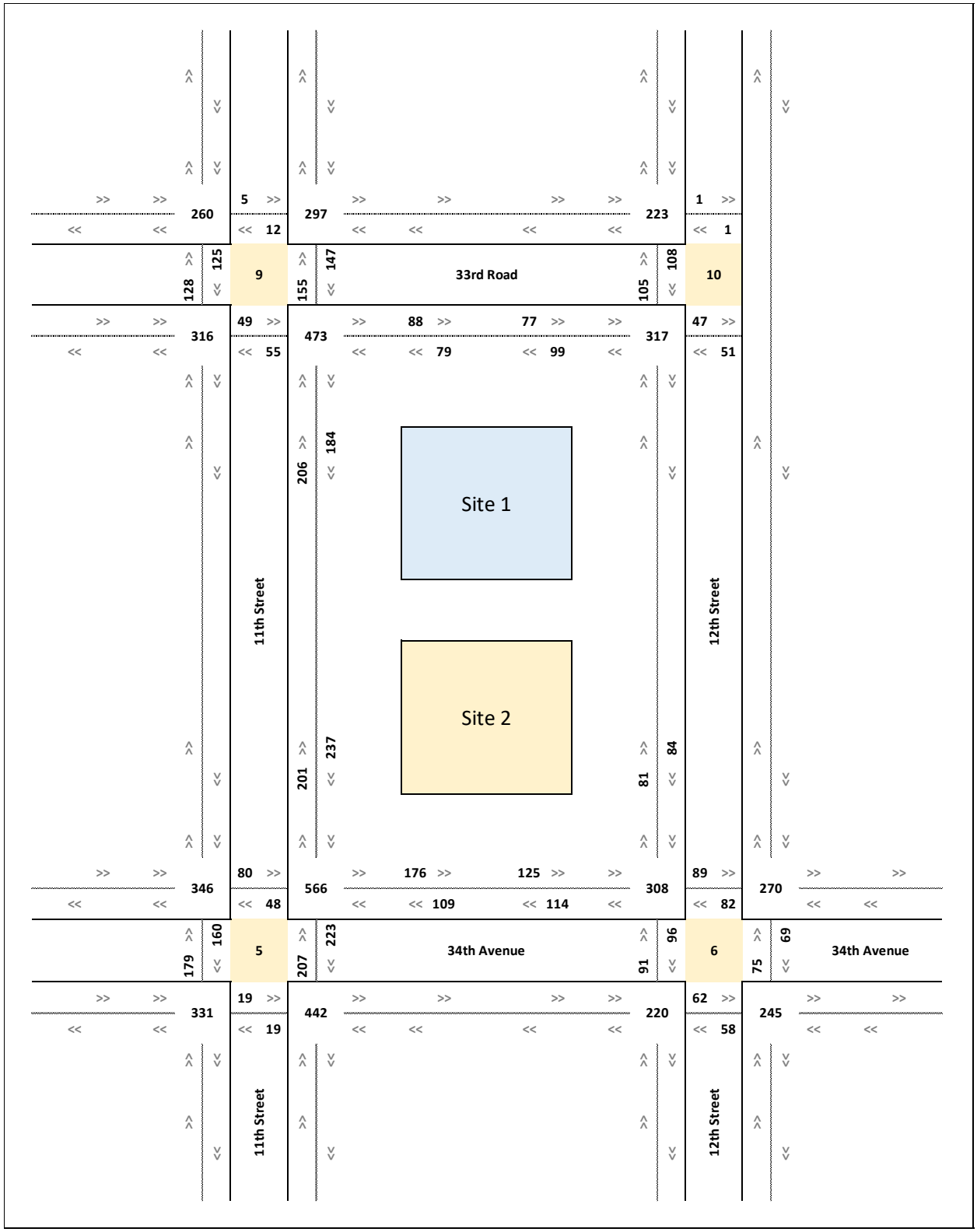

Table 2.16-32: With-Action Sidewalk Level of Service

Weekday Midday	No-Action Conditions		With-Action Conditions	
	sf/ped	LOS	sf/ped	LOS
North side of 34th Avenue between Site Entrance/Exit and 12th Street	1,476	A	385	A
East side of 11th Street between Q 104 Bus Stop and 34th Avenue	170	A	77	A
Weekday PM	**No-Action Conditions**		**With-Action Conditions**	
	sf/ped	LOS	sf/ped	LOS
East side of 11th Street between Q 104 Bus Stop and 34th Avenue	3,402	A	77	A

*highlighted cells denote significant adverse impacts

Parking Assessment

The parking analysis identifies the extent to which on-street and off-street parking is available and utilized under existing and future conditions. It takes into consideration anticipated changes in area parking supply and provides a comparison of parking needs versus availability to determine if a parking shortfall is likely to result from parking displacement attributable to the project or additional demand generated by a proposed project. Typically, the study area for this analysis encompasses on-street parking within a ¼ mile of the Proposed Development.

This assessment uses the following methodological approach to assess the potential impact of the Proposed Project on parking.

1. Identify and On and Off-street Public Parking Options Proximate to Project Sites.

2. Determine Existing Parking Utilization and Supply Identify observed on- and off-street parking supply and utilization in the quarter mile radius of the Affected Area during a weekday from 8:00am to 10:00am, 11:00am to 1:00pm, and 3:00pm to 5:00pm on the same day.
3. Identify Future Parking Demand with Proposed Development

4. Determine the peak parking demand of the proposed project using an accumulation model and factors derived from the ITE Manual.

5. Determine whether the available parking supply of will meet the project with-action parking demand.

6. Identify and Define Available Public Transportation Options Near Project Site.

2020 Existing Conditions

As noted above, the Proposed Development would provide 160 parking spaces. Since the with-action scenario includes a mixture of residential, commercial, industrial, and community facility uses, it is anticipated that there would be peak parking overnight for residential uses, and mid-afternoon/evening for commercial, community facility, industrial, and residential uses. Accordingly, data was collected for the 8:00am to 10:00am, 11:00am to 1:00pm, and 3:00pm to 5:00pm peak periods.

An inventory of existing parking regulations within a ¼-mile radius of the Development Site was compiled from field surveys and on-line sources. On-street public parking is generally governed by alternate-side-of-the-street regulations to facilitate street cleaning, with more restrictive regulations in place at locations where additional traffic flow capacity is needed, especially during the weekday AM and PM peak periods. Based on existing curbside parking regulations, and taking into account curb space obstructed by curb cuts, fire hydrants, and other impediments.

Based on data collected during field surveys conducted on November 12, 2020, existing on-street parking within the overall parking study area is effectively 100 percent utilized during the 8am to 10am period, the 11am to 1pm period, and the 3pm to 5pm period. as shown in **Table 2.16-33** below. No off-street public parking was identified within the ¼ mile study area. **Figure 2.16-27** below shows the parking study area.

Table 2.16-33: Existing Parking Utilization

2020 Existing	Weekday AM	Weekday Midday	Weekday PM
Capacity	1,238	1,226	1,243
Demand	1,228	1,226	1,243
Available Spaces	0	0	0
Utilization	100%	100%	100%

Note: Does not include illegally parked vehicles

2024 No-Action Conditions

Parking demand in the parking study area will increase by the build year of 2024. Demand is likely to increase due to four active construction projects and one rezoning in the area that would add 885 new dwelling units, 11,793 GSF of local retail, and 6,882 GSF of medical community facility uses. These projects would include 446 residential parking spaces, only available to residents of those sites. The excess residential parking demand along with the total commercial and community facility on-street parking demand for these sites composes the No-Action demand from these development sites a shown below in **Table 2.16-34**. This demand was calculated based on the ITE *Trip Generation Manual*, 11th Edition In/Out factors for applicable land uses and the same trip generation factors as used above in **Table 2.16-2** for applicable land uses.

Table 2.16-34: No-Action Projects and Parking Spaces

Address	DU	Commercial GSF	CF GSF	Parking Spaces
11-28 30th Drive	151	0	0	214
11-37 31st Avenue	117	0	0	68
11-12 30th Drive	266	557	0	0
Vernon Blvd Rezoning	351	11,236	6.882	164
Total	**885**	**11,793**	**6,882**	**446**

In addition to increased demand from the No-Action projects, background growth of the surrounding area will increase on-street parking demand. Existing on-street parking demand was grown using the same methodology as above in Detailed Traffic and Pedestrian analysis. As shown below in **Table 2.16-35**, based on the development from the No-Action projects and background growth of the existing parking demand, parking utilization in the study area would increase during all three peak hours. Utilization would be 111% during the 8am – 10am period, 107% during the 11am – 1am period, and 109% during the 3pm – 5pm period.

Table 2.16-35: No-Action Parking Utilization

2024 No-Action	Weekday AM	Weekday Midday	Weekday PM
Capacity			
Existing Capacity	1,238	1,226	1,243
No-Action Capacity from Development Sites [1]	0	0	0
Total No-Action Capacity	**1,238**	**1,226**	**1,243**
Demand			
2021 Existing Demand	1,315	1,249	1,295
Background Growth Increment [2]	26	25	26
No-Action Demand from Development Sites [3]	30	39	33
Total No-Action Demand	**1,372**	**1,314**	**1,354**
Utilization			
Available Spaces	-134	-88	-111
No-Action Utilization	**111%**	**107%**	**109%**
Change from Existing Utilization	**4.60%**	**5.27%**	**4.72%**

1. *Reflects additional on-site parking supply generated by No-Action sites open to the public*
2. *Reflects an annual background growth rate (2021 CEQR Technical Manual, Table 16-4)*
3. *Represents parking demand generated by the No-Action sites that would not be accommodated on-site*

Figure 2.16-27: Parking Study Area

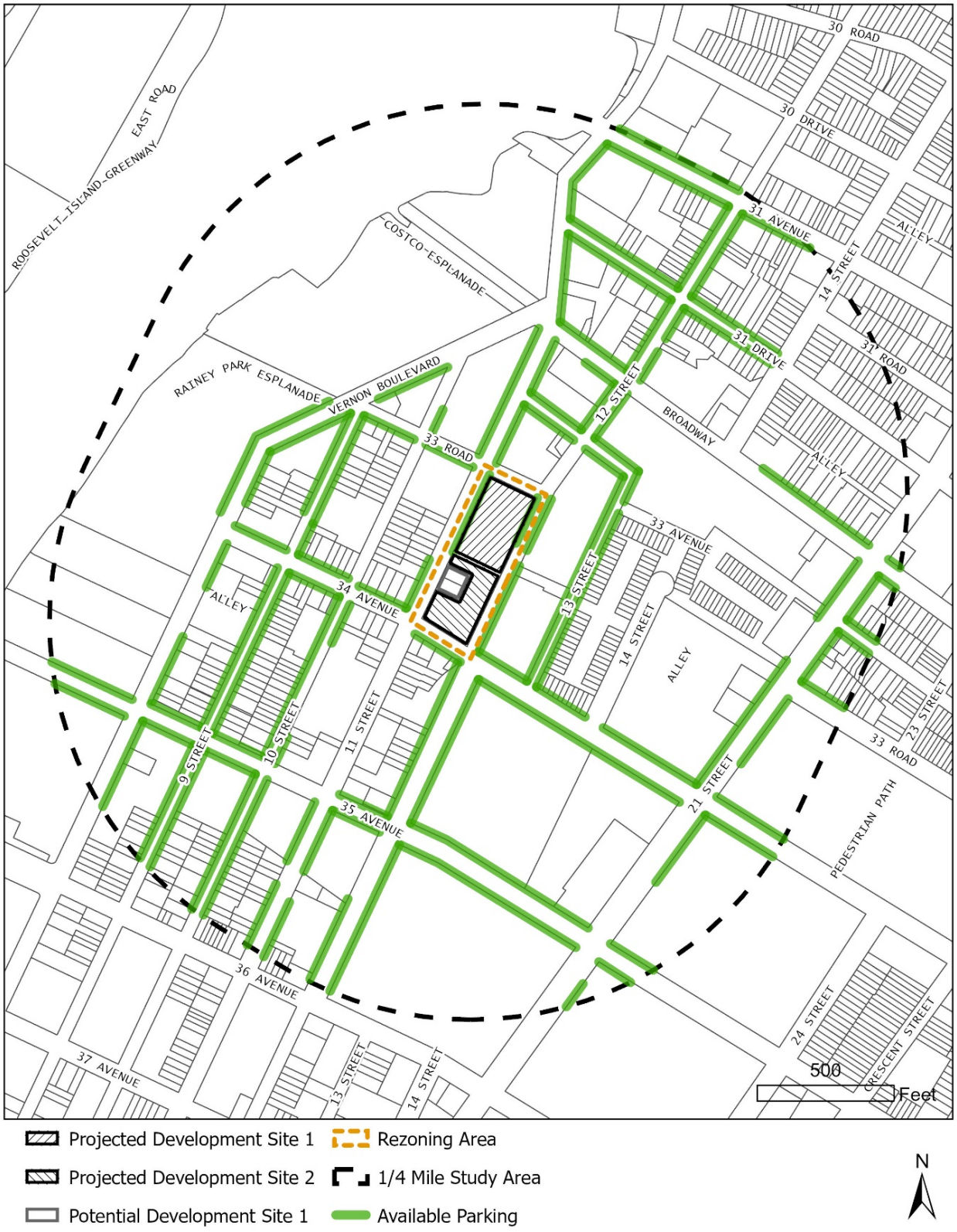

2024 With-Action Conditions

A parking accumulation study was performed on the proposed development using the ITE *Trip Generation Manual*, 11th Edition. The peak hour parking demand resulting from the proposed development would be 322 vehicles in the morning period, 394 vehicles in the afternoon, and 472 vehicles in the evening. Additionally, 160 parking spaces would be added as part of the proposed project as shown below in **Table 2.16-36**.

The existing demand, No-Action project parking demand, and the Proposed Project's parking demand is shown below in **Table 2.16-36**. The Proposed Actions would result in a parking utilization increase of approximately 24% in the morning peak period, 30% in the afternoon peak period, and 35% in the evening peak.

Table 2.16-36: With-Action Parking Utilization

2024 With-Action	Weekday AM	Weekday Midday	Weekday PM
Capacity			
No-Action Capacity	1,238	1,226	1,243
Proposed Development Capacity	160	160	160
Total With-Action Capacity	**1,398**	**1,386**	**1,403**
Demand			
Total No-Action Demand	1,372	1,314	1,354
Projected Demand Increment	322	394	472
Total With-Action Demand	**1,694**	**1,708**	**1,826**
Utilization			
Available Spaces	-296	-322	-423
With-Action Utilization	**121%**	**123%**	**130%**
Change from No-Action Utilization	**23.48%**	**29.99%**	**34.90%**

The 2024 With-Action Condition parking assessment shows that the Proposed Project has a significant parking shortfall.

Public Transportation Options Near Proposed Development

The area is well-served by public transit, and is within a Transit Zone. The Broadway and 36th Street subway stations are serviced by the MTA with stops for the N and W lines and is within one mile to the southeast of the Affected Area. The 21st Street-Queensbridge subway station is also within one mile to the south of the Affected Area with MTA F line. Stops for the Q103, Q104, Q69, and Q100 buses are in the immediate area. Further MTA Bus access is available within a quarter- to half-mile walking distance as well.

Vehicular and Pedestrian Safety Assessment

Crash data for the study area intersections were obtained from NYC DOT for the period between 2015 – 2019. The data obtained quantify the total number of reportable crashes (involving fatality, injury, or more than $1,000 in property damage), fatalities, and injuries during the study period, as well as the yearly breakdown of vehicular crashes with pedestrians and bicycles at each location.

During the 2015 – 2019 five-year period, a total of 22 reportable and non-reportable crashes, no fatalities, 12 injuries, and 4 pedestrian/bicyclist-related crashes occurred at the study area intersections. A rolling yearly total of crash data identifies no study intersections as high crash locations. **Table 2.16-37** and **Table 2.16-38** depict total crash characteristics by intersection during the study period, as well as a breakdown of pedestrian and bicycle crashes by year and location. As no study intersections are high crash locations, no further analysis is warranted regarding vehicular and pedestrian safety.

Table 2.16-37: Study Intersections Vehicular Crash Summary

Intersection	All Crashes by Year					Total Crashes		
	2015	2016	2017	2018	2019	Crashes	Fatalities	Injuries
11 Street & 33 Road	1	2	0	1	1	5	0	4
11 Street & 34 Avenue	0	4	1	2	3	10	0	5
12 Street & 33 Road	0	0	0	0	1	1	0	0
12 Street & 34 Avenue	0	2	0	2	2	6	0	3
Total	1	8	1	5	7	22	0	12

Table 2.16-38: Study Intersection Pedestrian Crash Summary

Intersection	Pedestrian Crashes by Year					Total Pedestrian Crashes		
	2015	2016	2017	2018	2019	Crashes	Fatalities	Injuries
11 Street & 33 Road	0	0	0	0	1	1	0	1
11 Street & 34 Avenue	0	0	0	1	0	1	0	1
12 Street & 33 Road	0	0	0	0	0	0	0	0
12 Street & 34 Avenue	0	2	0	0	0	2	0	2
Total	0	2	0	1	1	4	0	4

Project Mitigation Measures

The preceding sections of this chapter identified the potential for significant adverse environmental impacts resulting from vehicular and pedestrian traffic operations as a result of the Proposed Development. Specifically, one intersection during the Weekday AM and Midday peak hours has the potential to be impacted. Therefore, project mitigation measures have been developed in order to mitigate these potential impacts. Implementation of project improvement measures would be subject to approval by the New York City Department of Transportation (NYC DOT) prior to installation.

As previously stated, the northbound left-turn/through/right-turn movement at 34th Avenue and 12th Street is projected to experience potential impacts during the Weekday AM and Midday peak hours. The northbound approach at this intersection is the only controlled approach, which leads to queueing as vehicles wait to cross or turn onto the heavily trafficked East-West movements on 34th Avenue.

Geometric improvements were considered but decided against as they did not provide enough relief for the affect movements and would require a significant reduction of parking in an area that is both heavily parked-up and immediately adjacent to large residential developments which rely on those parking spaces. As a result, an all-way stop was found to be the more effective project improvement because it not only provides adequate relief to traffic operations, but more importantly, improves intersection safety for vehicles and pedestrians.

Additionally, in the interest of linking the proposed development with the surrounding neighborhood and increasing vehicular and pedestrian safety, crosswalks would be installed on the eastbound and westbound approaches on 34th Avenue at 12th Street. The applicant also commits to performing an updated all-stop warrant once the Proposed Development is built and occupied for DOT review and approval. Upon NYC DOT approval of all plans and specifications prepared by the Applicant, the Applicant shall install the approved all-way stop sign control to the satisfaction of DOT prior to obtaining TCOs or COs for the proposed development.

Project Improvement Measures

Pedestrians are projected to traverse the uncontrolled crossings on 11th Street at 33rd Road, and as such, as part of project development, the applicant commits to develop and submit a plan for review and approval by NYC DOT to install traffic calming measures on the northbound and southbound directions along 11th Street in the vicinity of 33rd Road. As discussed below, the Applicant commits to installing the approved traffic calming measures to the satisfaction of DOT prior to obtaining TCOs or COs for the proposed development.

All-Way Stop Warrant

After review of the conditions causing the impacts on the northbound movements at 34th Avenue and 12th Street, it was deemed appropriate to complete an all-way stop warrant analysis to determine the feasibility and necessity of an all-way stop at this intersection. As previously stated above, the applicant commits to working with DOT post-approval; pre-construction, to place an enhanced crosswalk and speed reducers on 11th street at 33rd Road on both approaches to provide for the safety of pedestrians generated by the proposed development.

All analysis was conducted under CEQR protocols and best-practices as outlined in the Appendix to Chapter 16 of the 2021 CEQR Technical Manual. As previously stated, traffic and pedestrian data were gathered in October of 2021, and crash data was provided for the period of 2015 – 2019 by NYC DOT. Additionally, ATR data was collected in November, 2021 to supplement the TMC counts in October for the purposes of the all-way stop warrant analysis. Vehicle and pedestrian volumes under With-Action conditions are presented above in **Figure 2.16-17** - **Figure 2.16-20**, respectively, while crash statistics are presented above in **Table 2.16-37** - **Table 2.16-38**.

At 34th Avenue and 12th Street the analysis results, as appended in **Appendix E**, show that an all-way warrant satisfies Warrant 1 (Volume Experience Warrant) as the intersection in question experiences greater than 300 vehicles per hour on average on the major road during any eight hours of an average day and greater than 200 units per hour (vehicles and pedestrians) on the minor road.

The effect on LOS impact for traffic at this intersection was analyzed and is noted in **Table 2.16-39** and **Table 2.16-40** below. An illustrative drawing of the all-way stop warrant including crosswalks is shown below in **Figure 2.16-28**.

Conclusion

Potential Significant Adverse Impacts are projected for one intersection during the Weekday AM and Midday peak hours. However, these impacts are mitigated by the proposed project improvement of an all-way stop at 34th Avenue and 12th Street, which is warranted based on Warrant 1 (Volume Warrant). As a result, no significant adverse impacts are projected as a result of the Proposed Development.

As noted at the conclusion of the Parking Assessment, the Proposed Project has a significant parking shortfall, per the CEQR Technical Manual for areas outside of parking zones 1 & 2.

No intersections within the study area were identified as high-crash locations and as such, no impacts are projected to vehicular or pedestrian safety.

The following Project Components Related to the Environment (PRCEs) and Mitigation Measures for transportation will be guaranteed by restrictive declaration. With the restrictive declaration in place, this analysis concludes that the Proposed Project would not result in any significant adverse traffic impacts.

PRCEs

Declarant shall implement as part of its construction of the Proposed Building, and at its sole cost and expense, the following Project Components Related to the Environment (PCREs):

- Traffic Calming Measures: Declarant shall develop and submit a plan for review and approval by NYC DOT to install traffic calming measures on the northbound and southbound directions along 11th Street in the vicinity of 33rd Road (the "approved traffic calming measures"). Upon NYC DOT approval of all plans and specifications prepared by Declarant, Declarant shall install the approved traffic calming measures to the satisfaction of DOT prior to obtaining TCOs or COs for the proposed development.

Mitigation Measures

Declarant shall implement, at its sole cost and expense, the following Mitigation Measures:

- All-Way Stop Sign Control: Declarant, shall develop and submit a plan for review and approval by NYC DOT to install an all-way stop sign control at the intersection of 12th Street at 34th Avenue. Upon NYC DOT approval of all plans and specifications prepared by Declarant, Declarant shall install the approved all-way stop sign control to the satisfaction of DOT prior to obtaining TCOs or COs for the proposed development.

Table **2.16-39** and Table **2.16-40** below. An illustrative drawing of the all-way stop warrant including crosswalks is shown below in Figure **2.16-28**.

Table 2.16-39: Weekday AM With-Action & Project Improvement Level of Service

Weekday AM			No-Action Condition			With-Action Condition			With-Action Condition		
Intersection	Approach	Lane Group	v/c Ratio	Delay (sec/veh)	LOS	v/c Ratio	Delay (sec/veh)	LOS	v/c Ratio	Delay (sec/veh)	LOS
34th Avenue and 11th Street	EB	LTR	0.26	10.8	B	0.3	11.5	B	0.3	11.5	B
	WB	LTR	0.46	13.1	B	0.48	13.8	B	0.48	13.8	B
	NB	LTR	0.2	10.2	B	0.21	10.5	B	0.21	10.5	B
	SB	LTR	0.44	13	B	0.5	14.6	B	0.5	14.6	B
	Int.			12.2	B		13.2	B		13.2	B
34th Avenue and 12th Street	EB	LTR	0.03	1.4	A	0.05	2.3	A	0.34	11.2	B
	WB	LTR	0.05	1.5	A	0.05	1.6	A	0.57	14.8	B
	NB	LTR	0.69	36.7	E	**1.1**	**133.6**	**F**	0.41	12.3	B
	Int.			11.5	B		**40.4**	**E**		13.1	B

*highlighted cells denote significant adverse impacts

Table 2.16-40: Weekday Midday With-Action & Project Improvement Level of Service

Weekday Midday			No-Action Condition			With-Action Condition			With-Action Condition		
Intersection	Approach	Lane Group	v/c Ratio	Delay (sec/veh)	LOS	v/c Ratio	Delay (sec/veh)	LOS	v/c Ratio	Delay (sec/veh)	LOS
34th Avenue and 11th Street	EB	LTR	0.27	10.2	B	0.3	10.8	B	0.3	10.8	B
	WB	LTR	0.34	10.6	B	0.37	11.3	B	0.37	11.3	B
	NB	LTR	0.14	9.3	A	0.16	9.8	A	0.16	9.8	A
	SB	LTR	0.31	10.5	B	0.38	11.6	B	0.38	11.6	B
	Int.			10.3	B		11.1	B		11.1	B
34th Avenue and 12th Street	EB	LTR	0.02	0.9	A	0.03	1.2	A	0.36	10.9	B
	WB	LTR	0.03	1.3	A	0.04	1.5	A	0.46	12	B
	NB	LTR	0.62	29.7	D	**1.33**	**231.3**	**F**	0.36	11.2	B
	Int.			9.7	A		**68.8**	**F**		11.4	B

*highlighted cells denote significant adverse impacts

Figure 2.16-28: Proposed Crosswalk Diagram at 34th Avenue and 12th Street

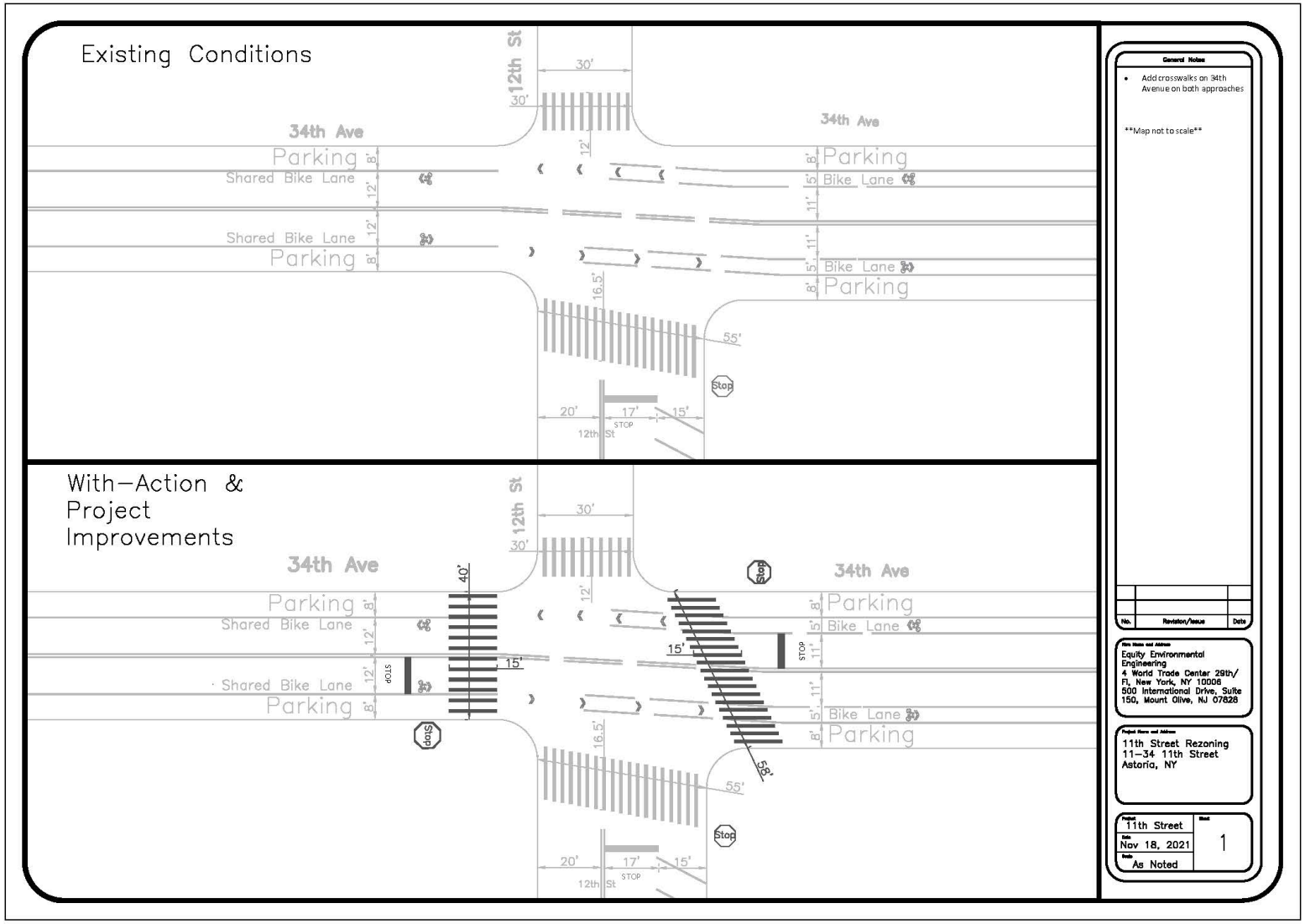

Chapter 17: Air Quality

When assessing the potential for air quality significant impacts, the *CEQR Technical Manual* seeks to determine a Proposed Action's effect on ambient air quality, or the quality of the surrounding air. Ambient air can be affected by motor vehicles, referred to as "mobile sources," or by fixed facilities, referred to as "stationary sources." This can occur during operation and/or construction of a project being proposed. The pollutants of most concern are carbon monoxide, lead, nitrogen dioxide, ozone, relatively coarse inhalable particulates (PM_{10}), fine particulate matter ($PM_{2.5}$), and sulfur dioxide. The *CEQR Technical Manual* generally recommends an assessment of the potential impact of mobile sources on air quality when an action increases traffic or causes a redistribution of traffic flows, creates any other mobile sources of pollutants (such as diesel train usage), or adds new uses near mobile sources (e.g., roadways, parking lots, garages). The *CEQR Technical Manual* generally recommends assessments when new stationary sources of pollutants are created, when a new use might be affected by existing stationary sources, or when stationary sources are added near existing sources and the combined dispersion of emissions would impact surrounding areas.

For this study, the analysis framework, as mandated by the State Environmental Review Act, follows the New York City Environmental Quality Review 2020 Technical Manual (CEQR TM). The potential air quality impacts of the following emissions are estimated following the procedures and methodologies prescribed in the CEQR TM:

- The potential for changes in vehicular travel associated with proposed development activities to result in significant mobile source (vehicular related) air quality impacts.
- The potential for emissions from the heating, ventilation and air conditioning (HVAC) systems of the proposed development to significantly impact nearby existing land uses.
- The potential for air toxic emissions released from existing industrial facilities to significantly impact the proposed development within 400 feet of the proposed development.
- The potential for significant air quality impacts from the emissions of facilities that require Prevention of Significant Deterioration permits (Title V), and facilities which require a state facility permit to significantly impact the proposed development within 1,000 feet of the proposed development.

Air Pollutants and Applicable Standards/Guidelines

Criteria Pollutants

The EPA has established national ambient air quality standards (NAAQS) for six of the most common air pollutants—known as "criteria" pollutants. The presence of these pollutants in ambient air is generally due to numerous diverse and widespread sources of emissions. The NAAQS primary standards are designed to protect public health with adequate margin of safety. The NAAQS secondary standards are designed to protect the public welfare from adverse effects, including those related to effects on soils, water, vegetation, visibility, and other aspects. As required by the Clean Air Act, EPA periodically conducts comprehensive

reviews of the scientific literature on health and welfare effects associated with exposure to the criteria air pollutants. The NAAQS have been adopted as the ambient air quality standards for the State of New York. The New York State Department of Environmental Conservation (NYSDEC) measures air pollutants at more than 50 sites across the state using continuous and/or manual instrumentation. These sites are a mix of federally-mandated and supplemental monitoring networks. The primary NAAQS and background concentrations from the nearest federally-mandated monitoring station(s) of the pollutant(s) that a detailed analysis was conducted for are presented in **Table 2.17-1**.

Table 2.17-1: NAAQS and Background Concentration Published in the NYSDEC 2019 Report

Pollutant	Averaging Period	National and State Standards	Background Concentration	Monitoring Station
NO_2	1-Hour	188 µg/m^3	110.5 µg/m^3	IS 52
	Annual	100 µg/m^3	31.8 µg/m^3	
$PM_{2.5}$	24-Hour	35 µg/m^3	18.3 µg/m^3	JHS 45
	Annual	12 µg/m^3	7.5 µg/m^3	
CO	1-Hour	35 ppm	1.87 ppm	CCNY
	8-Hour	9 ppm	1.30 ppm	

Note:
1. NYSDEC (2021). New York State Ambient Air Quality Report for 2019, https://www.dec.ny.gov/docs/air_pdf/2019airqualreport.pdf, Jan. 7, 2021.
2. µg/m^3 – microgram per meter cube; ppm – parts per million.

NYC Guidelines - Determining the Significance of Air Quality Impacts

The City's de minimis criteria are used to determine the significance of the incremental increase in CO and PM2.5 concentrations that would result as a consequence of the proposed project. The CO criteria set the minimum change in 8-hour average CO concentration that constitutes a significant environmental impact. Significant increase of CO concentrations in New York City are:

- An increase of 0.5 parts per million (ppm) or more in the maximum 8-hour average CO concentration at a location where the predicted No-Action 8-hour concentration is equal to 8 ppm or between 8 ppm and 9 ppm; or
- An increase of more than half the difference between baseline (i.e., No-Action) concentrations and the 8-hour standard, when No-Action concentrations are below 8 ppm.

The following criteria are used for determination of significant adverse PM2.5 incremental impacts for projects subject to the CEQR:

- Predicted 24-hour maximum PM2.5 concentration increase of more than half the difference between the 24-hour background concentration and the 24-hour standard; or
- Predicted annual average PM2.5 concentration increments greater than 0.1 µg/m3 at ground level on a neighborhood scale (i.e., the annual increase in concentration representing the average over an area of approximately 1 square kilometer, centered on the location where the maximum ground-level impact is predicted for stationary sources; or for mobile sources, at a distance from a roadway

corridor similar to the minimum distance defined for locating neighborhood scale monitoring stations); or

- Predicted annual average PM2.5 concentration increments greater than 0.3 µg/m3 at any receptor location for stationary sources.

Accordingly, 24-hour PM2.5 de minimis is an increment of 8.35 µg/m3, and annual PM2.5 concentration increments of 0.3 µg/m3 for stationary source and 0.1 µg/m3 for mobile source, and the 8-hour CO de minimis is an increment concentration of 3.85 ppm.

Non-Criteria Pollutants

The NYSDEC Department of Air Resources established short-term (one-hour) and annual concentrations standards for certain noncriteria pollutants. The standards are acceptable ambient levels for these pollutants, which are based on human exposure. The New York State standards for noncriteria pollutants are published in the DAR-1 guidance document (latest version dated February 12, 2021). DAR-1 presents Annual and Short-Term Guideline Concentrations (AGCs and SGCs, respectively) for contaminants that range in toxicity from high to low. The AGCs and SGCs are annual and 1-hour guideline concentrations, respectively, for potentially toxic or carcinogenic air contaminants. In addition, NYSDEC also regulates pollutants that produce discomfort due to odors, where significant discomfort is evaluated on quantity, characteristic, or duration.

Mobile Sources

According to the *CEQR Technical Manual*, projects may result in significant mobile source air quality impacts when they increase or cause a redistribution of traffic, create any other mobile sources of pollutants (e.g., diesel trains, helicopters, boats), or add new uses near mobile sources (e.g., roadways, garages, parking lots). Detailed analyses are required to predict whether a proposed action could potentially result in significant adverse air quality impact if certain threshold criterions are met or exceeded. Proposed actions that do not meet or exceed the threshold criterions (screen out) are not expected to result in mobile source impacts.

Screening Analysis

Project Generated Traffic

Screening analyses for the project's peak hour auto traffic and peak hour heavy-duty diesel vehicle (HDDVs) traffic were conducted. Per the *CEQR Technical Manual*, a detailed analysis for carbon monoxide (CO) is required if the generate peak hour auto traffic or diversion of existing peak hour traffic would result in an increment of 170 auto trips (in this area of the city). A detailed analysis for particles with an aerodynamic diameter of less than or equal to 2.5 micrometers ($PM_{2.5}$) is required if the generate peak hour HDDVs traffic or its equivalent in vehicular emissions, depending on the type of road, would be met or exceeded.

According to the transportation analysis for this project, the proposed project would generate a total of 105, 138, 154, and 94 net incremental vehicle trip ends (inbound and outbound combined) during the weekday AM, Midday, PM, and Saturday Midday peak hours, respectively. The peak-hours project-generated traffic

would not exceed the threshold of 170 vehicular trips (condition outlined in Sections 210 of Chapter 17 of *the CEQR Technical Manual*). Therefore, no CO detailed analysis is required.

The $PM_{2.5}$ equivalent truck calculation in vehicular emission screen ranges from 12 to 23 HDDVs depending on the type of road. Per NYS DOT Functional Classification, the Affected Area is bounded by 33rd Road (local road) to the north, 12th Street (local road) to the east, 34th Avenue (minor arterial) to the south, and 11th Street (major collector) to the west.

Using the worksheet provided in the *CEQR TM Section 210*, project-generated auto and truck trips were screened at the surrounding Study Area street segments where project-generated vehicles would traverse. Project-generated auto and truck trips during the AM, Midday, PM, and Saturday Midday peak hours are shown in **Figures 2.17-1 to 2.17-4** below. All autos were assumed to be LDGT1 class vehicles, based on guidance from the Department of City Planning (DCP) on similar projects. **Table 2.17-2** shows the project-generated Auto and Truck Trips at each Study Area street segment and the results of the *CEQR Technical Manual* Equivalent Truck Calculation for each peak-hour period.

As shown below in **Table 2.17-2**, the following street segments fail the HDDV screening threshold for local roads and warrant further analysis:

1. 12th Street between 33rd Road and 33rd Avenue
2. 12th Street between 33rd Road and 34th Avenue
3. 12th Street between 34th Avenue and 35th Avenue
4. 33rd Road between 10th Street and 11th Street
5. 33rd Road between 11th Street and 12th Street

In addition, the Projected Development Site 1 includes a 100-space accessory parking garage at its cellar level. Therefore, a detailed analysis is required.

Figure 2.17-1: Weekday AM Project-Generated Auto/Truck Trip Assignment

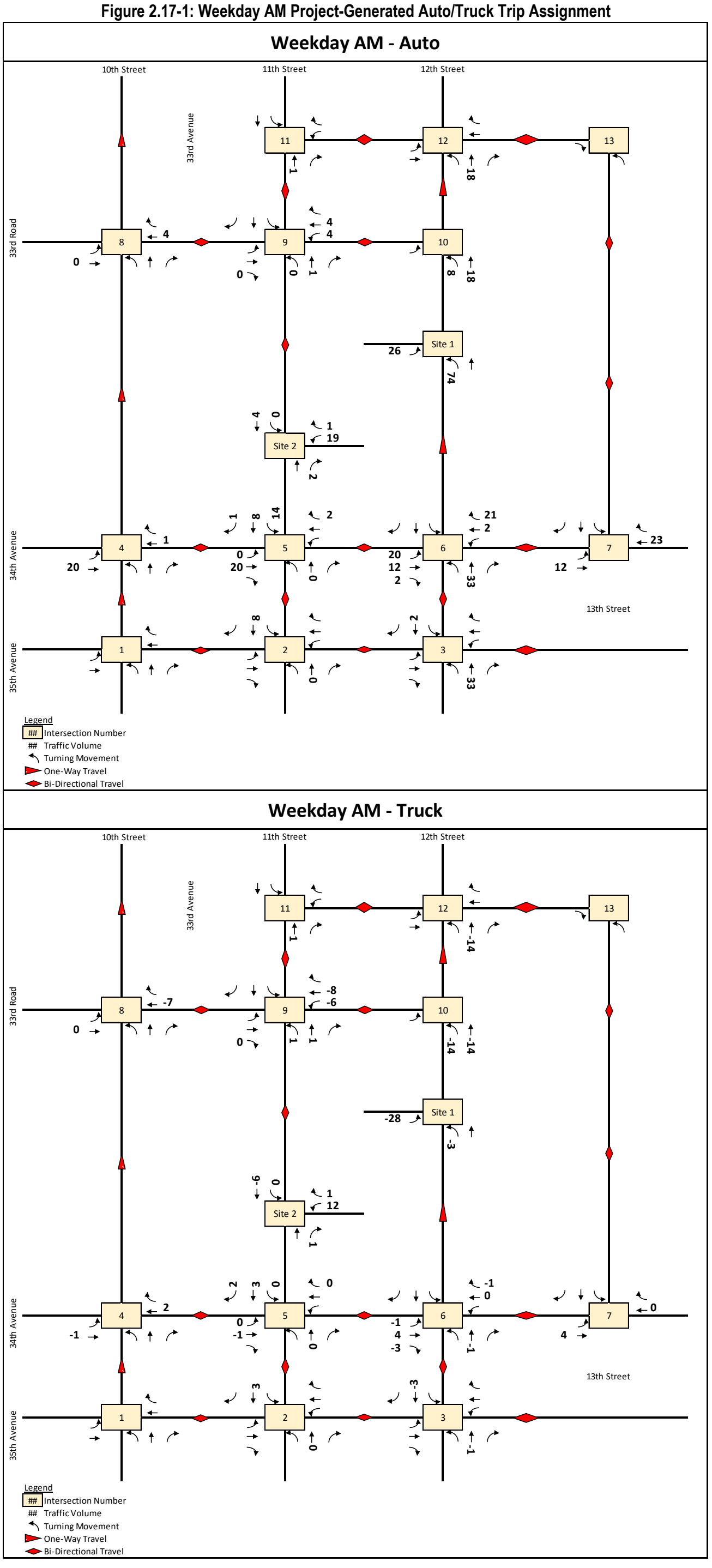

Figure 2.17-2: Weekday MD Project-Generated Auto/Truck Trip Assignment

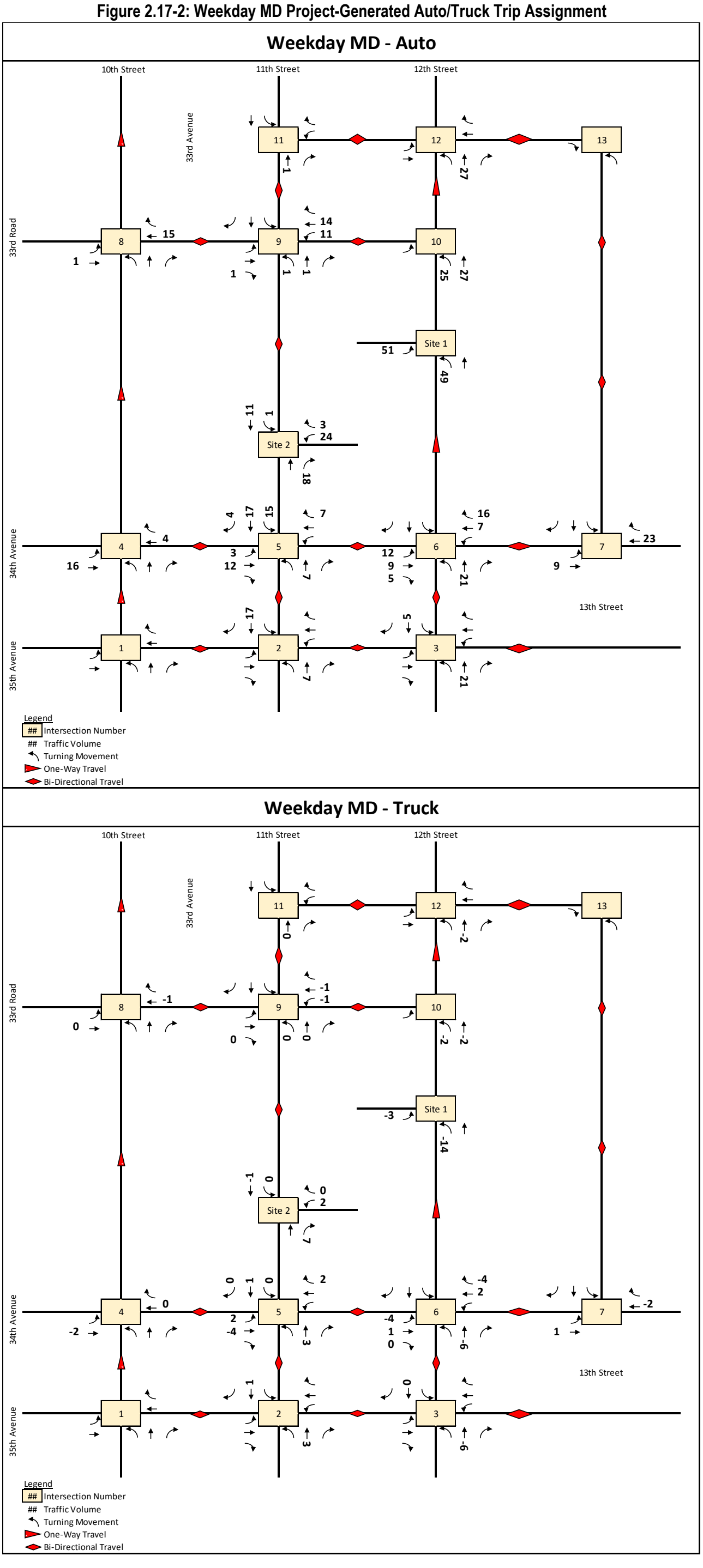

Figure 2.17-3: Weekday PM Project-Generated Auto/Truck Trip Assignment

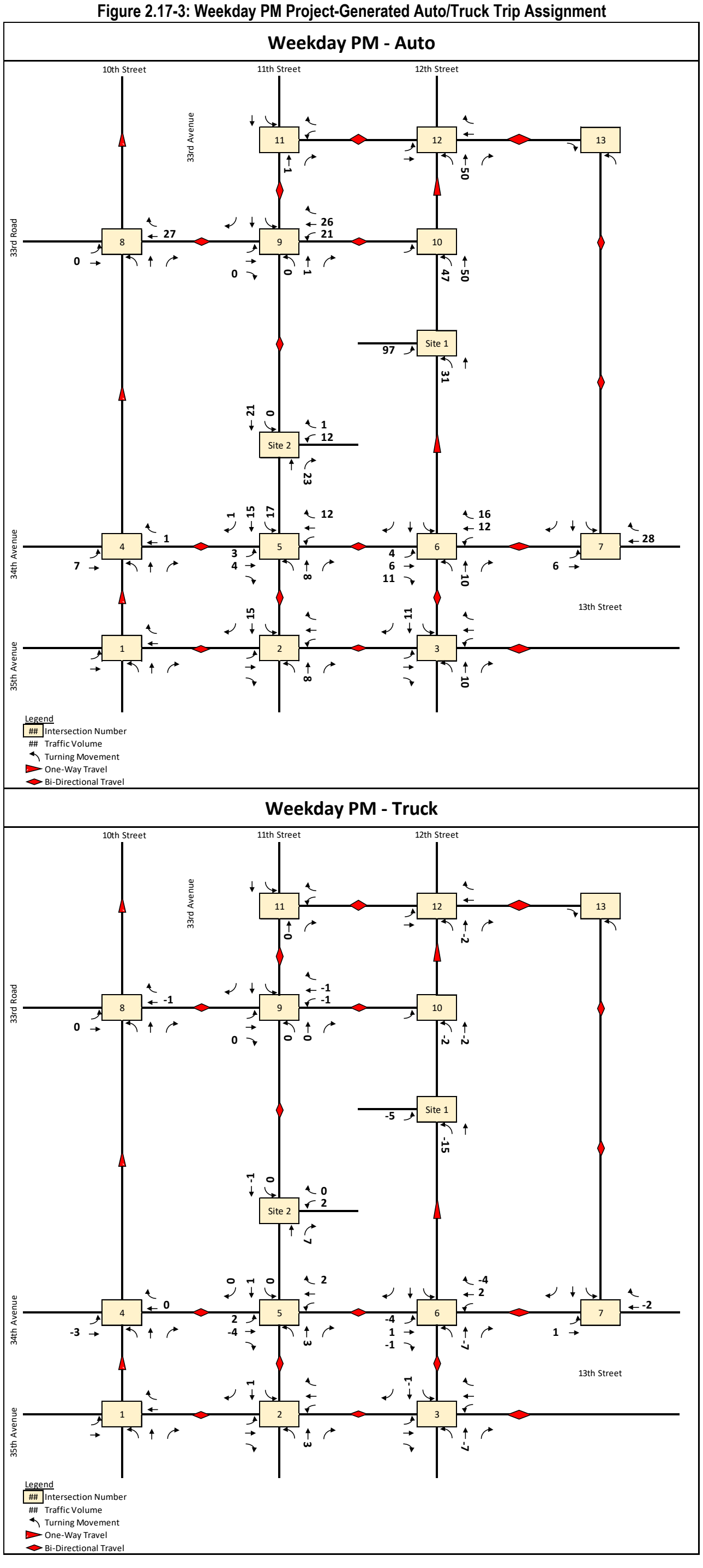

Figure 2.17-4: Saturday MD Project-Generated Auto/Truck Trip Assignment

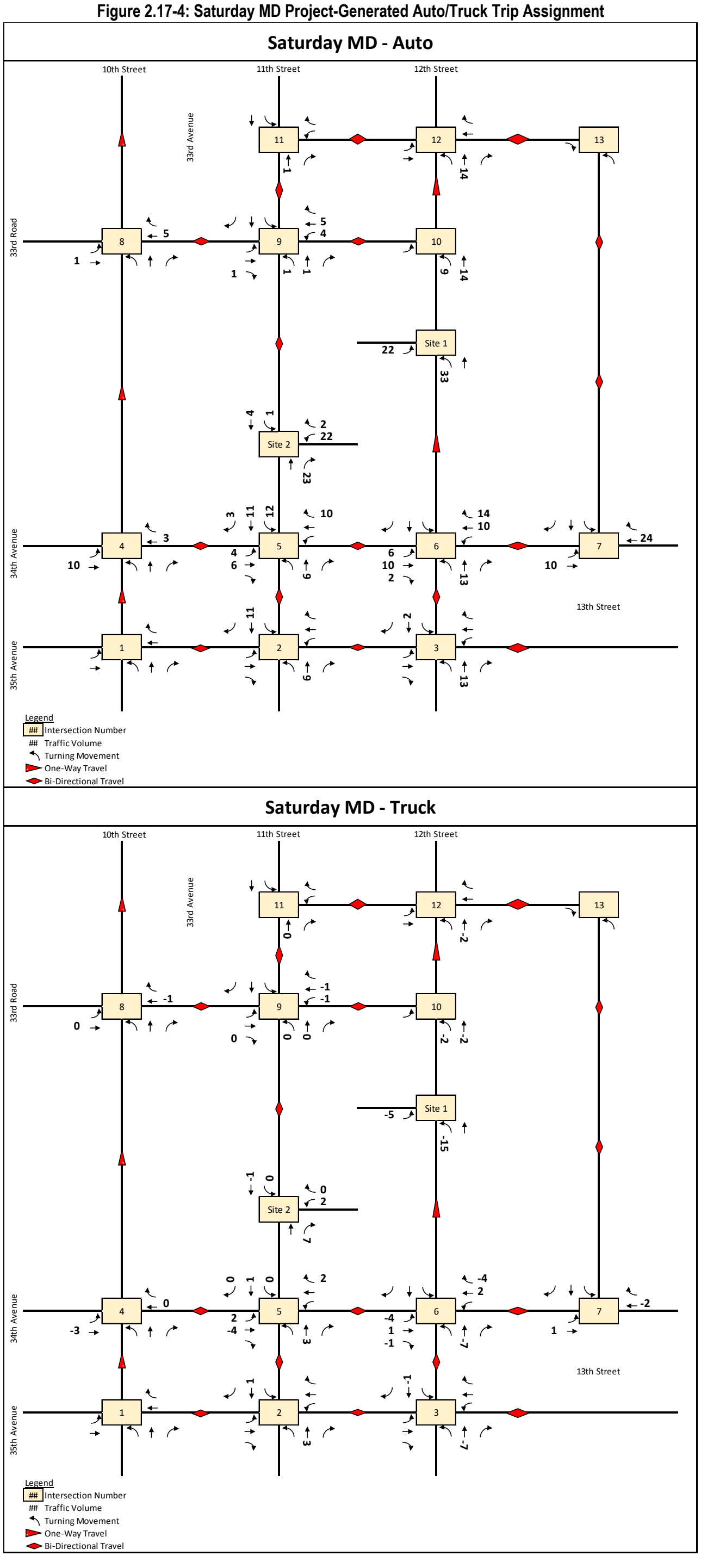

Table 2.17-2: HDDV Screen Results

Street	Street Segment	Threshold EQU Truck	AM				MD				PM				Sat MD			
			Cars	Trucks	Etrucks	Pass/Fail	Cars	Trucks	Etrucks	Pass/Fail	Cars	Trucks	Etrucks	Pass/Fail	Cars	Trucks	Etrucks	Pass/Fail
11th Street	Between 33rd Ave and 33rd Road	19	1.1	0.6	0.6	Pass	1.2	0.1	0.3	Pass	0.7	0.1	0.2	Pass	1.2	0.1	0.3	Pass
11th Street	Between 33rd Rd and 34th Ave	19	25.8	7.7	10.9	Pass	56.1	8.5	17.6	Pass	57.1	9.0	18.1	Pass	52.0	9.0	17.1	Pass
11th Street	Between 34th Ave and 35th Ave	19	8.4	3.1	4.0	Pass	24.0	3.7	7.6	Pass	23.0	4.0	7.6	Pass	20.2	4.0	7.0	Pass
34th Ave	Between 12th Street and 13th Street	23	34.9	3.1	3.7	Pass	32.0	-1.1	0.6	Pass	34.5	-1.4	0.6	Pass	34.6	-1.4	0.6	Pass
34th Ave	Between 11th Street and 12th Street	23	36.2	-0.1	1.5	Pass	34.0	-1.9	0.2	Pass	33.0	-2.3	-0.2	Pass	29.1	-2.3	-0.3	Pass
34th Ave	Between 11th Street and 10th Street	23	20.8	1.8	2.2	Pass	19.6	-2.1	-0.6	Pass	8.0	-2.2	-1.2	Pass	12.7	-2.2	-1.0	Pass
12th Street	Between 33rd Ave and 33rd Road	12	17.6	-13.6	-3.0	Pass	26.8	-1.6	11.5	Pass	49.7	-2.3	22.0	Fail	13.9	-2.3	4.8	Pass
12th Street	Between 33rd Rd and 34th Ave	12	99.6	-30.4	22.4	Fail	100.6	-17.3	33.9	Fail	128.0	-19.9	44.9	Fail	55.6	-20.0	10.0	Pass
12th Street	Between 34th Ave and 35th Ave	12	34.5	-4.3	13.0	Fail	26.3	-6.7	7.1	Pass	21.0	-7.4	3.9	Pass	14.6	-7.4	0.8	Pass
33rd Rd	Between 10th Street and 11th Street	12	4.2	-7.1	-4.0	Pass	15.8	-0.4	7.3	Pass	27.2	-0.7	12.5	Fail	6.3	-0.7	2.4	Pass
33rd Rd	Between 11th St and 12th Street	12	8.0	-14.2	-8.1	Pass	24.7	-1.7	10.5	Pass	47.4	-2.4	20.8	Fail	8.5	-2.4	2.1	Pass

Detailed Analysis

Detailed $PM_{2.5}$ analysis was conducted for the intersection of 12th Street and 33rd Road, the most affected intersection, based on the HDDVs screen results. The analysis was conducted using a tier 1 approach of the PM peak-hour period. The EPA's Mobile Vehicle Emission Simulator 2014 (MOVES2014b version) was utilized to predict vehicular emissions. Dust generated by vehicle traveling on local roadways (12th Street and 33rd Road) were added to MOVES emissions to predict total short-term $PM_{2.5}$ emissions. Pollutant concentrations at sensitive receptors, resulting from on-street traffic emissions, were modeled with the EPA's CAL3QHCR Gaussian dispersion model.

Dispersion analysis for the parking garage vent were calculated using the spreadsheet referenced in the *CEQR Technical Manual Appendices*. MOVES version 2014b was used to calculate vehicular emission. Pollutants' concentrations at the sidewalk across the street from the parking garage, resulting from the on-street traffic, were modeled with the EPA's CAL3QHCR Gaussian dispersion model.

Intersection $PM_{2.5}$ Analysis

PM2.5 detailed analysis was conducted for the intersection of 12 Street and 33rd Road using MOVES2014b and CAL3QHCR. The PM peak hour traffic was analyzed as the equivalent truck calculation in vehicular emissions was the greatest during that peak-hour period. Existing vehicle classification on the roadways were obtained in the field survey for the noise analysis (see Noise chapter). The project-increment was added to the No-Action traffic to project the With-Action traffic.

Vehicular emissions were compiled with the EPA Motor Vehicle Emission Simulator (MOVES) version 2014b. MOVES can be used to calculate emission rates of criteria air pollutants, greenhouse gas emissions, and some hazardous air pollutants for both on-road motor vehicles and non-road equipment. MOVES models calculate emissions at the national, county, and project level by use of databases and by specifying the characteristics (Run Specification) of the scenario that is modeled. For microscale (project level) analyses, MOVES require the use of traffic and roadways characteristics for each link (roadway segment) that is modeled and county data. The latest county database (2017) for the MOVES model was obtained from the NYSDEC. The county data included inspection and maintenance, passenger car/truck distribution, fuel data (fuel properties, distribution, and engine technology), age distribution, and meteorology data. Vehicles age distribution was projected for the Build year 2024 using the EPA tool.

Fugitive dust emissions were added to the MOVES output to calculate the short-term PM2.5 emission factors (annual fugitive dust emissions are negligible, based on similar projects). A silt loading factor of 0.4 g/m2, obtained from the CEQR Technical Manual, was applied in the analysis. In addition, a conservative assumption of "dry" road conditions was used for the short-term calculation (precipitation reduced silt loading).

Dispersion analysis was conducted with the EPA's CAL3QHCR dispersion model version 13196. PM2.5 concentrations were predicted with model-ready LaGuardia Airport meteorology data, obtained from the New York City Department of City Planning (DCP) for another project. Models specified settling and deposition

velocities of 0-meter per second, 60-minute averaging time, and urban surface roughness of 108-centimeter (applicable to single-family residential land use, which is generally the most conservative). Links were modeled as free flowing, at grade, links. Receptors were placed in spaced intervals at a height of 1.8 meter in the middle of the sidewalks for the short-term analysis and 15 meters from the curb for the annual timeframe period. Satellite imagery was used to locate links and receptors. The satellite imagery is a map application built into Lakes Environmental, Inc. CALRoad commercial version of CAL3QHC/R.

The With-Action 24-hour PM2.5 concentration and the annual PM2.5 increment between the With-Action and No-Action concentration were evaluated with the NYC Guideline, de minimis. Table 2.17-3 shows the dispersion analysis results.

The With-Action 24-hour $PM_{2.5}$ concentration and the annual $PM_{2.5}$ increment between the With-Action and No-Action concentration were evaluated with the NYC Guideline, *de minimis*. **Table 2.17-3** shows the dispersion analysis results.

Table 2.17-3: Project-Generated With-Action Traffic Dispersion Analysis Results

Pollutant and Averaging Time	Increment (Modeled) Concentration	Threshold Concentration	Threshold Standard
$PM_{2.5}$ 24-hour	3.00 µg/m^3	8.35 µg/m^3	*de minimis*
PM2.5 Annual Increment (1)	0.04 µg/m^3	0.1 µg/m^3	*de minimis*

Note.
1. Annual $PM_{2.5}$ concentration corresponds to the With-Action traffic. As the total concentration is less than the *de minimis*, no analysis is needed for the No-Action scenario.

As seen in **Table 2.17-3**, the Proposed Actions $PM_{2.5}$ increment concentrations do not exceed the *de minimis* (24-hour or annual averaging times). Therefore, there is no reason to believe that intersections effected by the Proposed Actions would result in significant adverse air quality impact(s).

Parking Facility Detailed Analysis

A detailed analysis was conducted for Projected Development Site 1. Projected Development Site 1 would include 100 spaces parking garage in the cellar level. The parking accumulation (ingress and egress) was provided by the transportation analysis for this project. CO analysis was based on the worst-case outbound vehicles and corresponding inbound vehicles. PM2.5 analysis was based on the 24-hour average ingress/egress. Accordingly, the parking garage maximum 1-hour would be 20 incoming and 80 outgoing vehicles during the AM hour of 5:00-6:00 and the 24-hour average would be 40 outgoing and 48 incoming vehicles.

The parking garage dimension and ramp length were obtained from the site plans, provided by the building architect for this project. Incoming/outgoing vehicles were assumed to travel half the width and two-third the length of the garage and cars were assumed to idle for 1-minute prior to traveling out of the parking facility, based on the *CEQR Technical Manual*.

The EPA's MOVES2014b emission factor algorithm was used to compile the CO and PM2.5 emission rates. The MOVES model is discussed in the Intersection PM2.5 Analysis section above. Vehicles emissions inside the parking garage were modeled with an ambient temperature of 45-degree Fahrenheit, based on the CEQR Technical Manual. PM2.5 emissions of dust generated by vehicles traveling on 12th Street or 33rd Road were added to estimate total particulate matter emissions for the short-term analysis (annual fugitive dust emission is negligible).

The EPA's CAL3QHCR dispersion model version 13196 was used for the dispersion analysis of the on-street traffic. All models specified settling and deposition velocities of 0-meter per second, 60-minute averaging time, and urban surface roughness of 108-centimeter corresponding to single family residential land-use. Receptors were placed across the streets (12th Street and 33rd Road) from the Development Site at heights of 1.8 meter and in the middle of the sidewalks. CO 1-Hour concentration was predicted with the emulate CAL3QHC meteorology data, specifying 10-deg incremental wind vector direction, 1-meter per second wind speed, neutral stability, and 285.5 Kelvin, and 1,000-meter mixing height. A persistence factor of 0.7 was used to predict the 8-hour CO on-street traffic concentration. PM2.5 concentrations were predicted with model-ready LaGuardia Airport meteorology data, obtained from the DCP for another project.

Emissions from the garage were assumed to be vented through a single vent. The CEQR Technical Manual Appendices worksheet calculation was used to calculate dispersion of a pollutant emitted at a rate of 1 gram per second. A persistence factor of 0.7 was used to evaluate the 8-hour CO concentration and persistence factors of 0.4 and 0.1 to evaluate the 24-hour and annual PM2.5 concentrations, respectively. The garage vent was located 10-foot above grade (adjoining grade) and vent at the minimum ventilation rate. A wind speed of 1-meter per second, based on CAL3QHC input, was conservatively assumed. Receptors were located on the adjacent and opposite sidewalks at a height of 6 feet above grade, and 5-foot directly above the vent simulating an operable window. The concentrations corresponding to the 1 gram per second emission rate were multiplied by the calculated emissions in the parking garage to predict the concentrations.

Table 2.17-4 shows the parking garage dispersion analysis results. As previously mentioned, the analysis corresponds to the maximum 1-hour activity in the garage and on-street traffic. The concentrations were evaluated with the de minimis design value.

Table 2.17-4: Parking Facility Dispersion Analysis Results

Pollutant	Concentration			*de minimis* Design Value	Concentration Unit
	Adjacent	Across the Street (1)	Window Above		
8-Hour CO	0.09	0.11	0.04	3.85	ppm
24-Hour $PM_{2.5}$	0.55	3.04	0.26	8.35	$\mu g/m^3$
Annual $PM_{2.5}$	0.14	0.19	0.06	0.3	$\mu g/m^3$

Note:
1. Concentration increments include on-street traffic emissions.

As seen in **Table 2.17-4**, the 8-hour CO and $PM_{2.5}$ concentrations do not exceed the *de minims* design values. Therefore, there is no reason to believe that the Proposed Actions parking garage(s) would result in significant adverse air quality impact(s).

Stationary Source

Heating and Hot Water Systems

The stationary source analysis will study the potential impacts of the two buildings at Projected Development Sites 1 and 2 and Potential Development 1 on nearby receptors. Projected Development Site 1 is projected to be developed with a 338,474-GSF, 8-story, 95-foot-tall mixed-use building. The building will include 204,831 GSF of residential floor area, 90,251 GSF of commercial floor area, and 43,392 GSF of cellar-level parking floor area. Projected Development Site 2 is projected to be developed with a 248,095-GSF, 8-story, 95-foot-tall mixed-use building, including 149,677 GSF of residential floor area, 35,988 GSF of commercial floor area, 10,000 GSF of community facility floor area, 27,109 GSF of manufacturing floor area (UG 6 warehouse uses; no manufacturing on site), and 25,321 GSF of cellar-level parking floor area. Potential Development 1 is projected to be developed with a 45,741 GSF, 8-story, 95-foot-tall mixed-use building. The building will include 7,490 GSF of commercial floor area, 33,262 GSF of residential floor area and the remaining cellar space would be used as a parking floor area.

Per the *CEQR Technical Manual*, the HVAC analysis considers the potential for emissions from the HVAC systems of the proposed development to significantly impact existing land uses (project-on-existing), and the potential of the Proposed Actions to significantly impact each other (project-on-project). As two Projected Development Sites are considered likely, project-on-project analysis is required for the HVAC systems analysis.

Screening Assessment

The potential for the heat and hot water system(s) to have a significant adverse impact on nearby receptors depends on the type of fuel that would be used by the HVAC system, the height of the stack venting the emissions, the distance to the nearest building of similar or greater height, and the building's use and the square footage of the development that would be served by the system, both of which effect the amount of fossil fuel consumed. The CEQR Technical Manual screening assessment is based on these factors. In addition, the CEQR screening procedure is applicable to buildings that are not less than 30 feet from the nearest building of similar or greater height. A detailed analysis is required if the screening assessment failed.

According to 15 RCNY 2-15, no new boiler or burner installations may use No. 6 or No. 4 fuel oils. Therefore, the highest-emitting fuel that could be used is No. 2 fuel oil. As such, the CEQR nomographs depicted on Figure 17-5 of the CEQR Technical Manual Appendices was used for the screening assessment of Potential Development Site 1, which a generic screen for oil No. 2 fueled boiler serving a residential building. Projected Development Sites 1 and 2 screening analyses were conducted using Figure 17-7 of the CEQR Technical Manual Appendices, which is a generic screen for natural gas fueled boilers serving a residential building.

Figure 2.17-5 through **Figure 2.17-7** show the screening analysis nomographs for both Projected Development Site 1 and 2 and Potential Development 1. The results of the screening indicate that any building of equal or greater height than the 95-foot-tall Projected Development buildings and at a distance of 150 feet or less from Site 1, 125-feet or less from Projected Development Site 2, and/or 73-feet or less from Potential Development 1 may be impacted by the Proposed Actions. There are currently no buildings of similar or greater height in the screening area, however both buildings in the Proposed Development are adjacent to one another and require an impact analysis on each other. Also, another development is proposed at 12-12 33rd Avenue directly across 12th Street. This development consists of 5 separate buildings on Block 522 with mixed commercial, residential and community facility use. The buildings are planned to range in height from 55 to 95 feet. While there are currently no buildings requiring further analysis, the Proposed Development's impact on itself and the adjacent proposed development do require further analysis through AERMOD.

Figure 2.17-5: Proposed Development Site 1 HVAC Screening

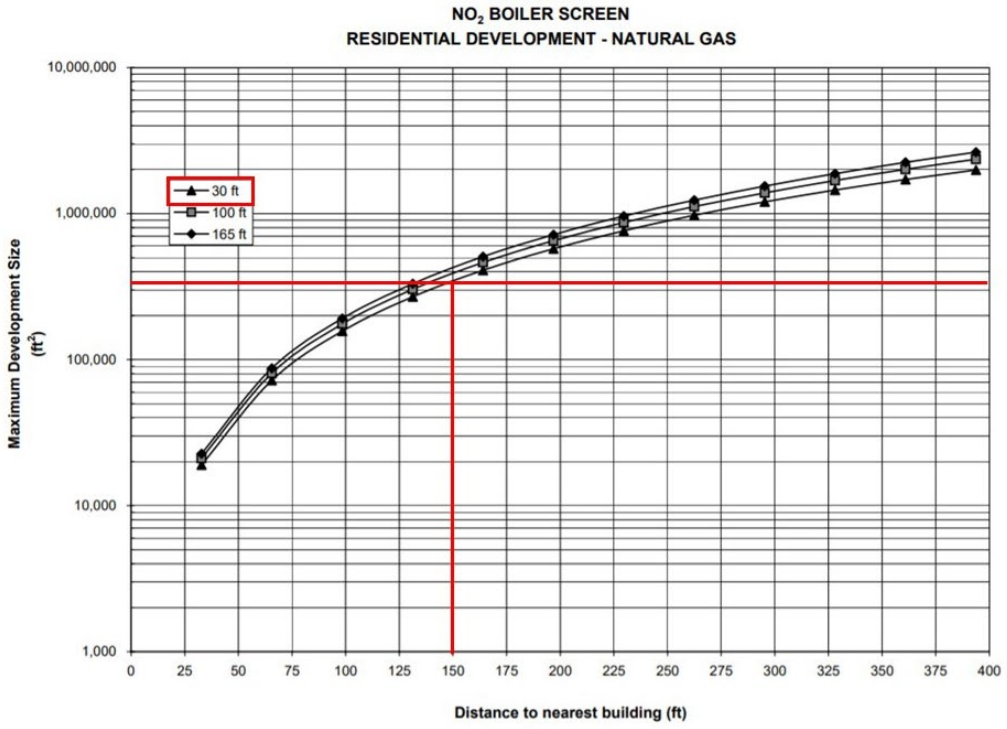

Figure 2.17-6: Proposed Development Site 2 HVAC Screening

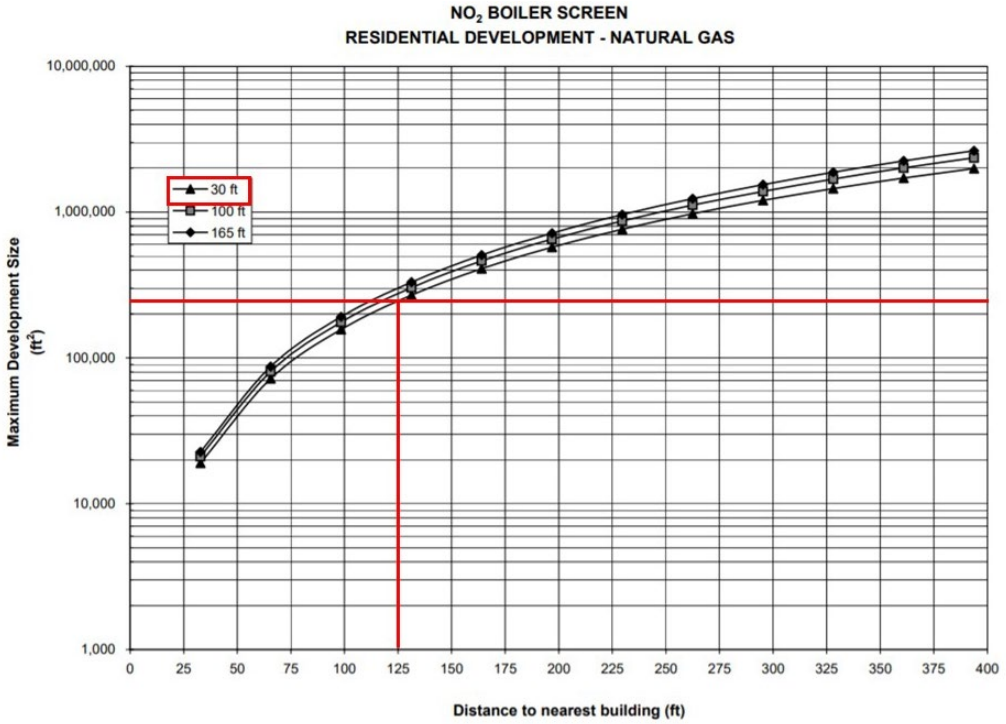

Figure 2.17-7: Potential Development Site 1 HVAC Screening

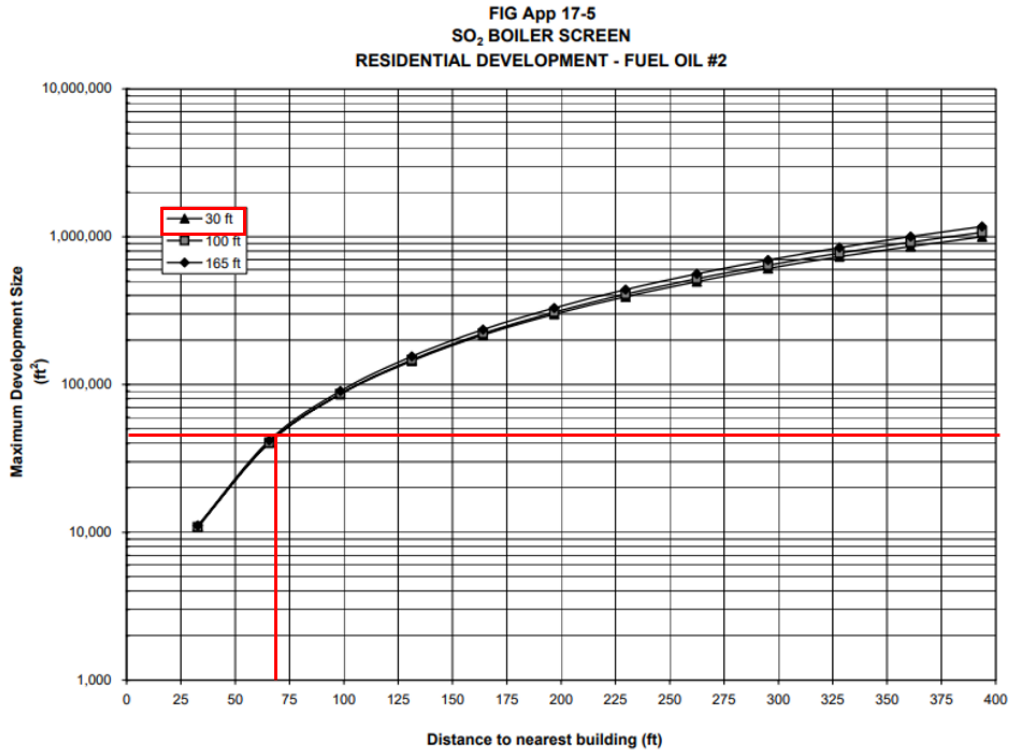

Detailed Analysis

Projected Development Site 1's actual height would be 95 feet. The building would contain 204,831 GSF of residential floor area, 90,251 GSF of commercial space, and 43,392 GSF of parking.

Projected Development Site 2's actual height would be 95 feet. The building would contain 149,677 GSF of residential floor area, 35,988 GSF of commercial space, 10,000 GSF of community facilities, 27,109 GSF of manufacturing (UG 16 warehouse uses; no manufacturing on site), and 25,321 GSF of parking.

Potential Development Site 1's actual height would be 95 feet. The building would contain 33,262 GSF of residential floor area, 7,490 GSF of commercial space, and 4,989 GSF of parking.

AERMOD dispersion analyses were run to determine whether exhaust from the HVAC systems of the anticipated development buildings might have a significant adverse impact on another anticipated development building and/or the some of the planned developments of 33-33 11th Street Rezoning application. In accordance with CEQR guidance, this analysis was conducted assuming stack tip downwash, urban dispersion surface roughness length of 1.0-meter, elimination of calms, and population of 2,000,000. Building Profile Input Program (BPIP) was run with the downwash effect enabled. Flat terrain option was specified in the AERMOD models.

Projected Development Site 1 (Lots 15 & 22) will have street wall fronts on both 11th Street, 12th Street. and 33rd Road. Projected Development Site 2 is located at the southern portion of block 318. Potential Development 1 is located on the western side of block 318 along 11th Street. Each Projected Development Site shares a wall with the other and Potential Development 1 is surrounded on three sides by Projected Development 2. As such, two project-on-project detailed analyses, as seen in **Table 2.17-5**, were conducted. Each air dispersion analysis is the potential impact of Projected Development Site's impact on the other site. The potential impact on the planned development buildings of 12-12 33rd Avenue Rezoning application was analyzed for the emissions of Projected Development Sites 1 and 2 and Potential Development 1 in three stacks, all 98 feet high, as close as possible to the developments of 12-12 33rd Avenue project. The stack of Projected Development Site 1 was located with a setback distance determined in the project-on-project detailed analysis and at a height of 98 feet, the same height as the combined stack of the other developments to maximize impact.

The developments' HVAC equipment emission rates were calculated using the annual fuel usage. Per the CEQR Technical Manual, the pollutants of concern for natural gas fueled boilers are NO_2 and PM2.5. The boilers heat capacities were calculated from the annual fuel usage and the buildings' gross floor area. The boiler of Projected Development Site 1 assumed that the HVAC system will serve 133,643 GSF of non-residential space and 204,831 GSF of residential space. The boiler of Projected Development Site 2 assumed that the HVAC system will serve 98,418 GSF of non-residential space and 149,677 GSF of residential space. The boiler of Potential Development Site 1 assumed that the HVAC system will serve 7,490 GSF of non-residential space and 33,262 GSF of residential space. Pertinent values were obtained from the CEQR Technical Manual Appendix for residential buildings, and the assumption that all fuel would be consumed during the 100-day (or 2,400 hour) heating season. Emission factors were obtained from the EPA AP-42 manual. **Table 2.17-5** shows the short-term and annual emission rates.

Table 2.17-5: The Developments HVACs Equipment

Site ID	Stack Height (ft)	HVAC Equipment (MMBtu/hr)	Pollutant	Short-term Emission Factor (lb/hr)	Annual Emission Factor (lb/yr)
Projected Development Site 1	98	7.8	NO_2	0.727	1,744
			$PM_{2.5}$	0.055	133
Projected Development Site 2	98	5.6	NO_2	0.549	1,317
			$PM_{2.5}$	0.042	100
Potential Development Site 1	98	1.0	NO_2	0.0167	0.00457
			$PM_{2.5}$	0.00178	0.000486

The diameter of the stack and the exhausts' exit velocities were estimated based on values obtained from the New York City Department of Environmental Protection (DEP) "CA Permit" database for the corresponding boiler size (i.e., rated heat input or million Btu per hour). The stacks exit temperatures were assumed to be 300oF (423oK), which is appropriate for boilers. The New York City Building Code (Building Code) requires that a rooftop stack should be at least 10 feet away from the edge of the roof and at least 3 feet higher than the roofline. These stacks' locations were applied in the AERMOD modules. In addition, stacks were placed where the maximum predicted concentration would occur, and stack set back distance was applied if impact was predicted.

All analyses were conducted using five consecutive years of meteorological data (2015-2019). Surface data was obtained from La Guardia Airport and upper air data was obtained from Brookhaven station, New York. These meteorological data provide hour-by-hour wind speeds and directions, stability states, and temperature inversion elevations over the 5-year period. Meteorological data were combined to develop a 5-year set of meteorological conditions, which was used for the AERMOD modeling runs and Anemometer height of 3.4 meters was specified per NYSDEC.

Per Lakes Environmental Inc., PM2.5 special procedure which is incorporated into AERMOD calculates concentrations at each receptor for each year modeled, averages those concentrations across the number of years of data, and then selects the highest values across all receptors of the 5-year averaged highest values.

For the project-on-project analysis, the receptors on receiving buildings were placed all around the building's envelope in 10-foot increments, and on all floor levels. Ground floor receptors were placed at a height of 6-foot. The analysis assumed that all the ground floor levels are 15 feet high, and each other floor is 10 feet high. As such, the 2nd to 9th floor receptors were placed 6-foot above their respective height of floor levels. For the project-on-planned analysis, the receiving buildings were modeled as individual buildings based on the plans provided by the developer. Receptors on these receiving buildings were placed all around the buildings' envelopes in 10-foot increments, and on all floor levels. Ground floor receptors were placed at a height of 6-feet. The analysis assumed that all the ground floor levels are 15 feet high, and each other floor is 10 feet high. The top receptors were placed at 5 feet below the roof line.

NO_2 NAAQS

The 1-hour NO_2 NAAQS standard of 0.100 ppm (188 ug/m3) is the 3-year average of the 98th percentile (8th Highest) of daily maximum 1-hour average concentrations in a year. For determining compliance with this standard, the EPA has developed a modeling approach for estimating 1-hour NO_2 concentrations that is comprised of 3 tiers: Tier 1, the most conservative approach, assumes a full (100%) conversion of NOx to NO_2; Tier 2 applies a conservative ambient NO_2/NOx ratio of 80% to the NOx estimated concentrations; and Tier 3, which is the most precise approach, employs AERMOD's PVMRM module. The PVMRM accounts for the chemical transformation of NO emitted from the stack to NO_2 within the source plume using hourly ozone background concentrations. When Tier 3 is utilized, AERMOD generates 8th highest daily maximum 1-hour NO_2 concentrations or total 1-hour NO_2 concentrations if hourly NO_2 background concentrations are added within the model.

Per the CEQR TM, a Tier 1 approach is initially applied, followed by a Tier 2 application of NO_2/NOx ratio of 80% to the NOx modeled concentration to determine whether violation of the NAAQS is likely to occur. A less conservative Tier 3 approach is then applied if exceedances of the 1-hour NO_2 NAAQS were estimated.

The annual NO_2 standard is 0.053 ppm (100 ug/m^3). In order to conservatively estimate annual NO_2 impacts, a NO_2 to NO_x ratio of 0.75 percent, which is recommended by the NYCDEP for an annual NO_2 analysis, was applied.

Results of Dispersion Analyses

As stated in the AERMOD Setting section, each pollutant averaging time was modeled twice—with building wake effect enabled/disabled. The predicted concentration is the highest concentration of these. The results are compared with the 24-hour/annual $PM_{2.5}$ significant impact criteria, and the 1-hour/annual NO_2 NAAQS. Result of the project-on-project HVAC NO_2 and $PM_{2.5}$ analyses are shown in **Table 2.17-6**.

Table 2.17-6: Detailed HVAC Analyses Results

Receiving Development Site ID	24-hr $PM_{2.5}$ Impact	Annual $PM_{2.5}$ Impact	1-hour NO_2 Impact	Annual NO_2 Impact
	µg/m^3	µg/m^3	µg/m^3	µg/m^3
Project-on-Planned				
12-12 33rd Avenue	5.10	.090	149.5	27.6
Project-on-Project				
Projected Development Site 1	1.40	0.045	131.4	28.7
Projected Development Site 2	2.40	0.063	125.6	27.2
Potential Development Site 1	3.07	0.141	214.0	28.5
Potential Development Site 1 (NO_2 Tier 2)	N/A	N/A	179.7	N/A
Standard	**8.35**	**0.3**	**188**	**100**

As seen in **Table 2.17-6**, the $PM_{2.5}$ modeled concentrations are less than the significant impact criterions of 8.35 µg/m^3 and 0.3 µg/m^3, respectively, and both the 1-hour and annual NO_2 concentrations estimated are

less than the 1-hour and annual NO_2 NAAQS of 188 µg/m^3 and 100 µg/m^3, respectively. The project-on-planned and project-on-project results were all below their respective standards.

In order to ensure there are no potential significant air quality impacts due to the proposed development, the following E-Designation (E-661) will be placed on the sites:

Block 318, Lots 15 and 22 – Projected Development Site 1

Any new development on the above-referenced property must exclusively use natural gas as the type of fuel for the heating, ventilation, air conditioning and hot water system (HVAC) and ensure that the HVAC stack(s) is located at the highest tier and at least 98 feet above grade to avoid any potential significant adverse air quality impacts.

Block 318, Lot 1 – Projected Development Site 2

Any new development on the above-referenced property must exclusively use natural gas as the type of fuel for the heating, ventilation, air conditioning and hot water system (HVAC) and ensure that the HVAC stack(s) is located at the highest tier and at least 98 feet above grade to avoid any potential significant adverse air quality impacts.

Block 318, Lots 9 and 11 – Potential Development Site 1

Any new development on the above-referenced property must exclusively use natural gas as the type of fuel for the heating, ventilation, air conditioning and hot water system (HVAC) and ensure that the HVAC(s) stack is located at the highest tier and at least 98 feet above grade to avoid any potential significant adverse air quality impacts.

Industrial Emissions

The Proposed Actions would introduce a sensitive land use into the area. Accordingly, a preliminary screening was conducted to determine if there are any potential sources of industrial process emissions that could affect project occupants. Industrial sources were identified through a site visit within a 400-foot study area and the DEP CATS search.

400-Foot Study Area

The Affected Area is located within a R-5 zoning district, and the surrounding area is primarily low- to medium-density residential, commercial, and community facility uses. The 400-foot radius was screened for potential sources of industrial emissions and is shown below in **Figure 2.17-8.**

Based on field observations and reviews of DCP land use maps, twenty-four (24) sources were identified as potentially manufacturing or industrial in nature as identified as ID Number 1-24 in **Figure 2.17-8**. These uses were screened further using Google and in-field assessment on multiple occasions. **Table 2.17-7** shows the

twenty-four (24) properties within approximately 400 feet of the Affected Area that were screened as potentially industrial or manufacturing sites. These sites were further reviewed for permit activity by reviewing the DEP CATS Database. Only one active permit was identified within the search area. The permit is in relation to a natural gas boiler and does not require an emissions analysis. Therefore, there is no potential for impact to the Proposed Development from industrial sources in the surrounding area.

Table 2.17-7: Industrial Sites within 400 feet of Affected Area

Site ID	Block	Lot	Address	Active Permits
1	317	1	33-01 11th Street	None
2	318	1	33-80 12th Street	None
3	318	15	33-51 11th Street	None
4	318	22	33-33 11th Street	None
5	319	9	33-81 10th Street	None
6	319	20	33-53 10th Street	None
7	319	36	33-56 11th Street	None
8	319	43	33-72 11th Street	None
9	320	5	9-07 34th Avenue	None
10	320	10	33-43 9th Street	None
11	320	28	33-38 10th Street	None
12	324	32	34-12 10th Street	None
13	325	10	3431 10th Street	None
14	325	15	34-19 10th Street	CA137096
15	325	19	34-15 10th Street	None
16	325	22	34-11 10th Street	None
17	325	27	10-10 34th Avenue	None
18	325	30	10-16 34th Avenue	None
19	325	42	34-40 11th Street	None
20	326	15	34-25 11th Street	None
21	326	29	34-10 12th Street	None
22	326	30	34-20 12th Street	None
23	522	1	12-01 34th Avenue	None
24	522	29	12-12 33rd Avenue	None

.Figure 2.17-8: Industrial Emissions Screening

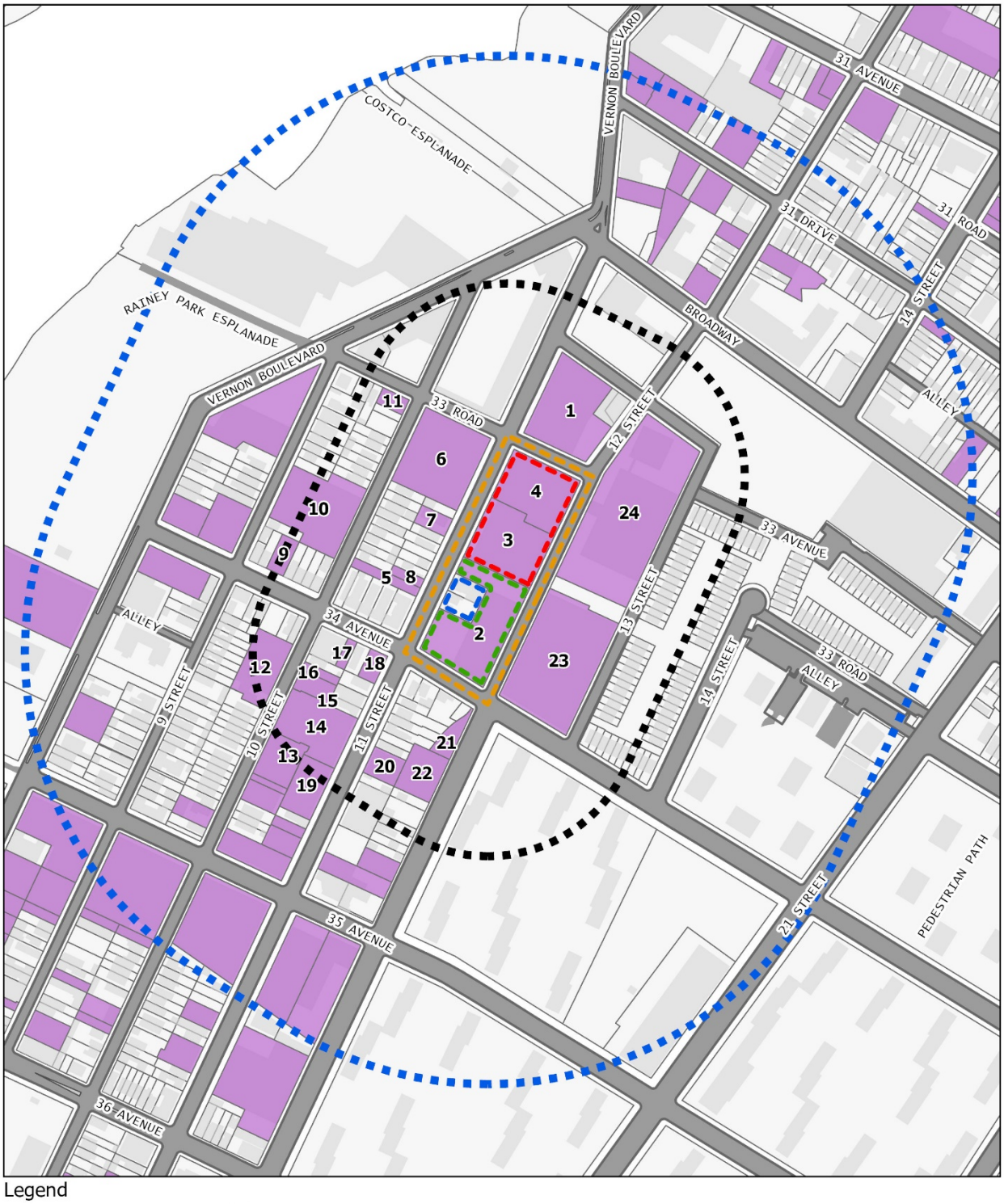

1,000-Foot Study Area

A search of the EPA Envirofacts ICIS-AIR database and the Toxics Release Inventory (TRI) was conducted for all parcels within the 400 and 1000-foot Study Area. The Envirofacts ICIS Air Database contains compliance and permit data for stationary sources of air pollution (such as electric power plants, steel mills, factories, and universities) regulated by EPA, state and local air pollution agencies. The Toxics Release Inventory (TRI) is a publicly available database containing information on toxic chemical releases and other waste management activities in the United States.

The search did not identify any large sources of industrial emissions or odor producing facilities within 1,000 feet of the Affected Area. As such, no further analysis of large emissions sources is warranted.

Industrial Emissions Conclusion

As indicated above, there are no active industrial emissions permits or large industrial emission sources within the 400- or 1,000-foot study areas. Additionally, there is no evidence present to conclude that there are illegal unpermitted air emissions present in the study area. Therefore, there does not appear to be any potentially significant impact in terms of air toxics to project occupants.

Chapter 19: Noise

Introduction

The Proposed Actions would create noise-sensitive residential, commercial office, artist studio, trade school, and community facility development. Therefore, an assessment of the potential for adverse effects on project occupants from ambient noise is warranted. The projected development would not create a significant stationary noise generator. Additionally, project-generated traffic would not double noise on nearby roadways, and therefore would not result in a perceptible increase in vehicular noise (refer to PCE screening analysis below). Therefore, this noise assessment is limited to an assessment of ambient noise that could adversely affect occupants of the development. The predominant noise source at the Affected Area is vehicular traffic on surrounding streets.

The Proposed Action would effectuate a zoning map amendment from R5 to a Special Mixed-Use ("MX") District, which would consist of an R6A zoning district paired with an M1-5 zoning district.

As part of the zoning requirement for Special MX districts, "all new dwelling units shall be provided with a minimum of 35 dB(A) of window/wall attenuation to maintain an interior noise level of 45 dB(A) or less, with windows closed, and shall provide an alternate means of ventilation", as noted in Section 123-32 of Zoning Resolution (ZR) Article XII. Equity Environmental Engineering conducted noise monitoring to determine site specific-attenuation requirements for the proposed development, pursuant to ZR 123-32.

Framework of Noise Analysis

Noise is defined as any unwanted sound, and sound is defined as any pressure variation that the human ear can detect. Humans can detect a large range of sound pressures, from 20 to 20 million micropascals, but only those air pressure variations occurring within a particular set of frequencies are experienced as sound. Air pressure changes that occur between 20 and 20,000 times a second, stated as units of Hertz (Hz), are registered as sound.

Because the human ear can detect such a wide range of sound pressures, sound pressure is converted to sound pressure level (SPL), which is measured in units called decibels (dB). The decibel is a relative measure of the sound pressure with respect to a standardized reference quantity. Because the dB scale is logarithmic, a relative increase of 10 dB represents a sound pressure that is 10 times higher. However, humans do not perceive a 10-dB increase as 10 times louder. Instead, they perceive it as twice as loud.

Sound is often measured and described in terms of its overall energy, taking all frequencies into account. However, the human hearing process is not the same at all frequencies. Humans are less sensitive to low frequencies (less than 250 Hz) than mid-frequencies (500 Hz to 1,000 Hz) and are most sensitive to frequencies in the 1,000- to 5,000-Hz range. Therefore, noise measurements are often adjusted, or weighted, as a function of frequency to account for human perception and sensitivities. The most common frequency weightings used are the A- and C-weightings. These weight scales were developed to allow sound level meters, which use filter networks to approximate the characteristic of the human hearing mechanism, to

simulate the frequency sensitivity of human hearing. The A-weighting is the most commonly used for environmental measurements, and sound levels measured using this weighting are denoted as dBA. The letter "A" indicates that the sound has been filtered to reduce the strength of very low and very high frequency sounds, much as the human ear does. C-weighting gives nearly equal emphasis to sounds of most frequencies. Mid-range frequencies approximate the actual (unweighted) sound level, while the very low and very high frequency bands are significantly affected by C-weighting.

Table 2.19-1: Noise Levels of Common Sources

Sound Source	SPL (dB(A))
Air Raid Siren at 50 feet	120
Maximum Levels at Rock Concerts (Rear Seats)	110
On Platform by Passing Subway Train	100
On Sidewalk by Passing Heavy Truck or Bus	90
On Sidewalk by Typical Highway	80
On Sidewalk by Passing Automobiles with Mufflers	70
Typical Urban Area	60-70
Typical Suburban Area	50-60
Quiet Suburban Area at Night	40-50
Typical Rural Area at Night	30-40
Isolated Broadcast Studio	20
Audiometric (Hearing Testing) Booth	10
Threshold of Hearing	0
Notes: A change in 3dB(A) is a just noticeable change in SPL. A change in 10 dB(A)Is perceived as a doubling or halving in SPL.	
Source: 2020 CEQR Technical Manual	

The following is typical of human response to relative changes in noise level:

- 3-dBA change is the threshold of change detectable by the human ear;
- 5-dBA change is readily noticeable; and
- 10-dBA change is perceived as a doubling or halving of the noise level.

The SPL that humans experience typically varies from moment to moment. Therefore, various descriptors are used to evaluate noise levels over time. Some typical descriptors are defined below.

- L_{eq} is the continuous equivalent sound level. The sound energy from the fluctuating SPLs is averaged over time to create a single number to describe the mean energy, or intensity, level. High noise levels during a measurement period will have a greater effect on the L_{eq} than low noise levels. L_{eq}

has an advantage over other descriptors because L_{eq} values from various noise sources can be added and subtracted to determine cumulative noise levels.

- Lmax is the highest SPL measured during a given period of time. It is useful in evaluating Leqs for time periods that have an especially wide range of noise levels.
- $L_{eq(24)}$ is the continuous equivalent sound level over a 24-hour time period.

The sound level exceeded during a given percentage of a measurement period is the percentile-exceeded sound level (L_X). Examples include L_{10}, L_{50}, and L_{90}. L_{10} is the A-weighted sound level that is exceeded 10% of the measurement period.

The decrease in sound level caused by the distance from any single noise source normally follows the inverse square law (i.e., the SPL changes in inverse proportion to the square of the distance from the sound source). In a large open area with no obstructive or reflective surfaces, it is a general rule that at distances greater than 50 feet, the SPL from a point source of noise drops off at a rate of 6 dB with each doubling of distance away from the source. For "line" sources, such as vehicles on a street, the SPL drops off at a rate of 3 dBA with each doubling of the distance from the source. Sound energy is absorbed in the air as a function of temperature, humidity, and the frequency of the sound. This attenuation can be up to 2 dB over 1,000 feet. The drop-off rate also will vary with both terrain conditions and the presence of obstructions in the sound propagation path.

Noise Standards and Guidelines

In 1983, the New York City Department of Environmental Protection (NYCDEP) adopted the City Environmental Quality Review (CEQR) noise exposure guidelines for exterior noise levels. As shown in **Table 2.19-2** below, noise standards classify noise exposure into four categories based on noise level limits and land use, for vehicular traffic, rail, and aircraft noise sources: Acceptable, Marginally Acceptable, Marginally Unacceptable, and Clearly Unacceptable, **Table 2.19-3** below defines attenuation requirements for buildings based on exterior noise exposure levels. Recommended noise attenuation values for buildings are designed to maintain interior noise levels of 45 dBA (*L_{10} or Ldn, depending on the source*) or below.

Table 2.19-2: Noise Exposure Guidelines for Use in City Environmental Impact Review

Receptor Type	Time Period	Acceptable General External Exposure	Airport[3] Exposure	Marginally Acceptable General External Exposure	Airport[3] Exposure	Marginally Unacceptable General External Exposure	Airport[3] Exposure	Clearly Unacceptable General External Exposure	Airport[3] Exposure
1. Outdoor area requiring serenity and quiet[2]		$L_{10} \leq 55$ dBA	$L_{dn} \leq 60$ dBA		$60 < L_{dn} \leq 65$ dBA		(I) $65 < L_{dn} \leq 70$ dBA, (II) $70 \leq L_{dn}$		$L_{dn} \leq 75$ dBA
2. Hospital, nursing home		$L_{10} \leq 55$ dBA		$55 < L_{10} \leq 65$ dBA		$65 < L_{10} \leq 80$ dBA		$L_{10} > 80$ dBA	
3. Residence, residential hotel, or motel	(7 AM to 10 PM)	$L_{10} \leq 65$ dBA		$65 < L_{10} \leq 70$ dBA		$70 < L_{10} \leq 80$ dBA		$L_{10} > 80$ dBA	
	(10 PM to 7 AM)	$L_{10} \leq 55$ dBA		$55 < L_{10} \leq 70$ dBA		$70 < L_{10} \leq 80$ dBA		$L_{10} > 80$ dBA	
4. School, museum, library, court, house of worship, transient hotel or motel, public meeting room, auditorium, out-patient public health facility		Same as Residential Day (7 AM-10 PM)		Same as Residential Day (7 AM-10 PM)		Same as Residential Day (7 AM-10 PM)		Same as Residential Day (7 AM-10 PM)	
5. Commercial or office		Same as Residential Day (7 AM-10 PM)		Same as Residential Day (7 AM-10 PM)		Same as Residential Day (7 AM-10 PM)		Same as Residential Day (7 AM-10 PM)	
6. Industrial, public areas only[4]	Note 4	Note 4		Note 4		Note 4		Note 4	

Notes:

(i) In addition, any new activity shall not increase the ambient noise level by 3 dB(A) or more.

[1] Measurements and projections of noise exposures are to be made at appropriate heights above site boundaries as given by American National Standards Institute (ANSI) Standards; all values are for the worst hour in the time period.

[2] Tracts of land where serenity and quiet are extraordinarily important and serve as important public need, and where the preservation of these qualities is essential for the area to serve its intended purpose. Such areas could include amphitheaters, particular parks or portions of parks, or open spaces dedicated or recognized by appropriate local officials for activities requiring special qualities of serenity and quiet. Examples are grounds for ambulatory hospital patients and patients and residents of sanitariums and nursing homes.

[3] One may use the FAA-approved L_{dn} contours supplied by the Port Authority, or the noise contours may be computed from the federally approved INM Computer Model using flight data supplied by the Port Authority of New York and New Jersey.

[4] External Noise Exposure standards for industrial areas of sounds produced by industrial operations other than operating motor vehicles or other transportation facilities are spelled out in the New York City Zoning Resolution, Sections 42-20 and 42-21. The referenced standards apply to M1, M2, and M3 manufacturing districts and to adjoining residence districts (performance standards are octave band standards).

Sources: New York City Department of Environmental Protection (adopted policy 1983).

Table 2.19-3 CEQR TM: Attenuation Values to Achieve Acceptable Interior Noise Levels

	Marginally Unacceptable				Clearly Unacceptable
Noise Level with Proposed Project	$70 < L_{10} \leq 73$	$73 < L_{10} \leq 76$	$76 < L_{10} \leq 78$	$78 < L_{10} \leq 80$	$80 < L_{10}$
Attenuation[1]	(i) 28 dB(A)	(ii) 31 dB(A)	(iii) 33 dB(A)	(iv) 35 dB(A)	$36 + (L_{10} - 80)^2$ dB(A)

Source: New York City of Environmental Protection

Notes:

[1] The above composite window-wall attenuation values are for residential dwellings and community facility development. Commercial office Spaces and meeting rooms would be 5 dB(A) less in each category. All the above categories require a closed window situation and hence an alternate means of ventilation.

[2] Required attenuation values increase by 1 dB(A) increments for L_{10} values greater than 80 dBA.

Measurement Location and Equipment

Because the predominant noise sources in the area of the proposed project consist of vehicular traffic, noise monitoring was conducted during peak weekday vehicular travel periods (AM, Midday, PM) on a typical midweek day. Pursuant to *CEQR Technical Manual* methodology, three (3) measurements were collected for 20-minute periods: Location One (1) was at the frontage of the Project Site at the intersection of 11th Street and 33rd Road; Location Two (2) was at the frontage of the Project Site along 11th Street; Location Three (3) was at the frontage of the Project Site at the intersection of 11th Street and 34th Avenue; and

Location Four (4) was at the frontage of the Project Site along 12th Street. The noise monitoring locations are shown in **Figure 2.19-1** and **Photo 2.19-1** through **2.19-4** below.

Noise monitoring was conducted using a Type 1 Casella CEL-633 sound level meter with wind screen. The monitor was placed on a tripod at a height of approximately four feet above the ground, away from any other noise-reflective surfaces. The monitor was calibrated prior to and following each monitoring session. Periods of peak vehicular traffic around the Project Area constitute a worst-case condition for noise. Noise back up data is provided in **Appendix C**.

Figure 2.19-1: Noise Monitoring Locations

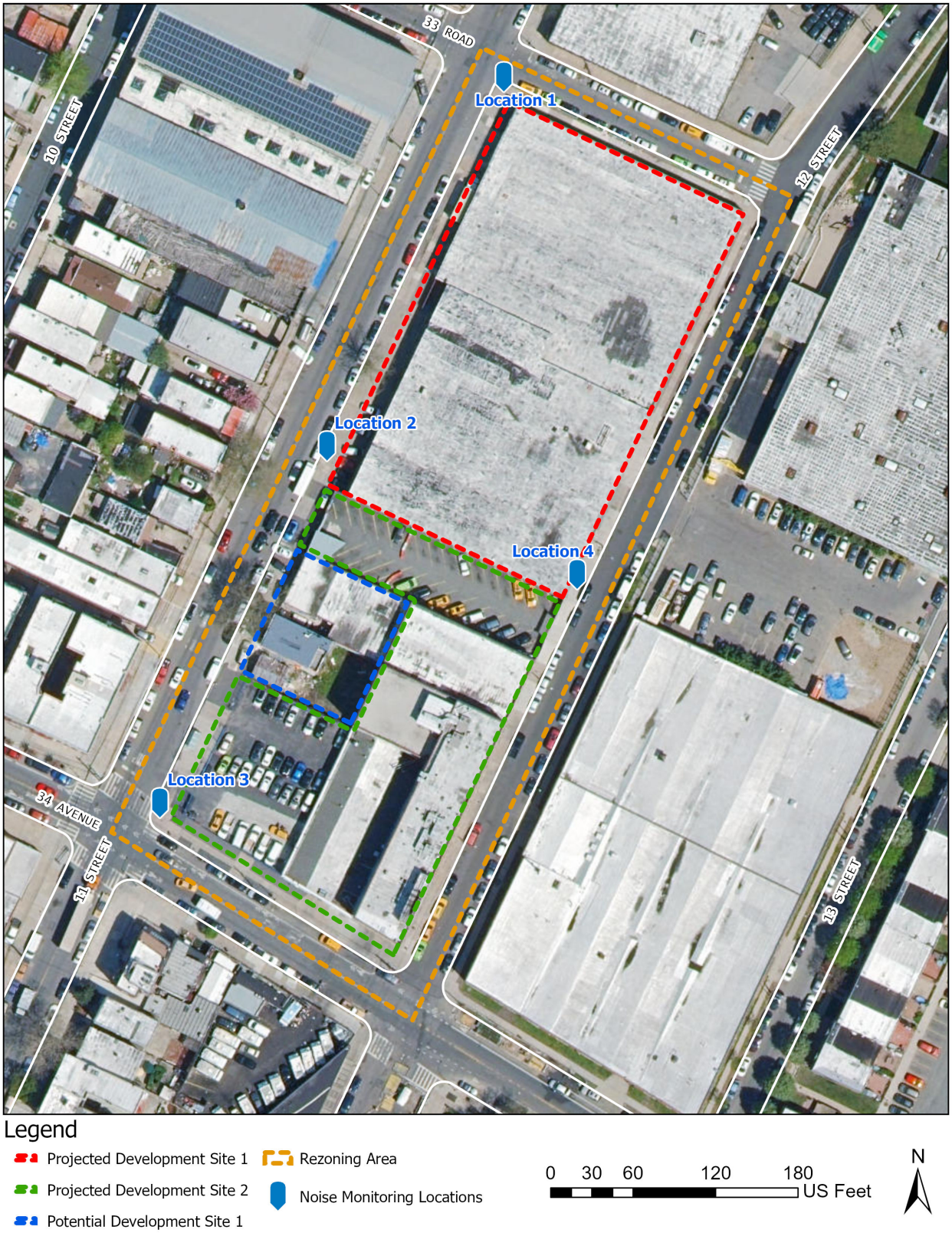

Photo 2.19-1: Noise Monitoring Location One (1)
Intersection of 11th Street and 33rd Road



Photo 2.19-2: Noise Monitoring Location Two (2)
11th Street



Photo 2.19-3: Noise Monitoring Location Three (3)
Intersection of 11th Street and 34th Avenue



Photo 2.19-4: Noise Monitoring Location Four (4)
12th Street



Existing Conditions

Monitoring was conducted during typical midweek conditions, on Thursday, November 7th, 2019. The weather was dry and wind speeds were moderate during all monitoring periods. The sound meter was calibrated before and after each monitoring session.

Based on the noise measurements, the predominant source of noise is vehicular traffic.

Table 2.19-4 through 2.19-7 below contains the results for the measurements taken at the Project Area noise monitoring locations:

Table 2.19-4 *Noise Levels (dB) at Location 1*			
Thursday, November 7th, 2019			
Time	**7:30 am – 7:50 pm**	**12:00 pm – 12:20 pm**	**4:30 pm – 4:50 pm**
L_{max}	79.9	83.7	85.2
L_{10}	68.0	**71.5**	69.5
L_{eq}	63.7	67.4	65.7
L_{50}	58.5	58.5	57.0
L_{90}	53.0	51.5	49.5
L_{min}	50.5	47.9	45.1

Note: **Bold** denotes L_{10} or L_{eq} noise level exceedances, according to the CEQR Technical Manual

Table 2.19-5 *Noise Levels (dB) at Location 2*			
Thursday, November 7th, 2019			
Time	**7:54 am – 8:14 am**	**12:21 pm – 12:41 pm**	**4:51 pm – 5:11 pm**
L_{max}	82.0	87.3	79.7
L_{10}	69.5	**71.5**	69.0
L_{eq}	65.7	67.7	65.0
L_{50}	58.0	57.5	59.5
L_{90}	53.0	51.5	51.5
L_{min}	50.2	48.0	42.7

Note: **Bold** denotes L_{10} or L_{eq} noise level exceedances, according to the CEQR Technical Manual

Table 2.19-6 *Noise Levels (dB) at Location 3*			
Thursday, November 7th, 2019			
Time	**8:16 am – 8:36 am**	**12:43 pm – 1:03 pm**	**5:11 pm – 5:32 pm**
L_{max}	100.9	88.5	98.9
L_{10}	67.0	**71.0**	67.5
L_{eq}	**75.3**	68.1	**71.4**
L_{50}	61.0	55.0	57.0
L_{90}	57.0	50.5	48.5
L_{min}	52.7	43.0	41.0

Note: **Bold** denotes L_{10} or L_{eq} noise level exceedances, according to the CEQR Technical Manual

Table 2.19-7 *Noise Levels (dB) at Location 4*			
Thursday, November 7th, 2019			
Time	**8:38 am – 8:59 am**	**1:05 pm – 1:25 pm**	**5:43 pm – 6:03 pm**
L_{max}	84.3	86.0	92.7
L_{10}	68.0	64.0	60.5
L_{eq}	66.9	62.5	64.6
L_{50}	60.0	53.5	44.5
L_{90}	51.5	49.5	38.0
L_{min}	46.3	40.0	34.5

Note: **Bold** denotes L_{10} or L_{eq} noise level exceedances, according to the CEQR Technical Manual

Table 2.19-8 through 2.19-11 *below contains the traffic counts and vehicle classifications during each monitoring period collected during noise monitoring:*

Table 2.19-8 ***Location 1*** *Traffic volumes and vehicle classifications*			
	7:30 am – 7:50 pm	**12:00 pm – 12:20 pm**	**4:30 pm – 4:50 pm**
Car/Taxi	42	29	36
Van/Light Truck/SUV	49	34	47
Medium Truck	3	2	0
Heavy Truck	1	0	0
Bus	5	1	1
Train	0	0	0

Table 2.19-9 ***Location 2*** *Traffic volumes and vehicle classifications*			
	7:54 am – 8:14 am	**12:21 pm – 12:41 pm**	**4:51 pm – 5:11 pm**
Car/Taxi	24	15	22
Van/Light Truck/SUV	20	17	19
Medium Truck	7	1	0
Heavy Truck	1	0	0
Bus	4	1	0
Train	0	0	0

Table 2.19-10 ***Location 3*** *Traffic volumes and vehicle classifications*			
	8:16 am – 8:36 am	**12:43 pm – 1:03 pm**	**5:11 pm – 5:32 pm**
Car/Taxi	53	37	41
Van/Light Truck/SUV	70	35	53
Medium Truck	10	3	0
Heavy Truck	0	1	0
Bus	4	2	1
Train	0	0	0

Table 2.19-11 ***Location 4*** *Traffic volumes and vehicle classifications*			
	8:38 am – 8:59 am	**1:05 pm – 1:25 pm**	**5:43 pm – 6:03 pm**
Car/Taxi	21	12	15
Van/Light Truck/SUV	16	19	11
Medium Truck	0	0	0
Heavy Truck	0	0	0
Bus	0	0	0
Train	0	0	0

Mobile Source Noise Analysis

Pursuant to Section 111 of the 2020 CEQR Technical Manual, mobile sources are those noise sources that move in relation to a noise-sensitive receptor—principally automobiles, buses, trucks, aircraft, and trains. Each has its own distinctive noise character, and, consequently, an associated set of noise assessment descriptors.

For Mobile Sources, an initial noise assessment may be appropriate if a proposed action would generate additional project-generated vehicular traffic in an area where roadways currently carry no or very low traffic volumes, or where a nearby receptor would potentially be impacted by high ambient noise levels. Receptors are generally the subject of most noise impact analyses. A noise-sensitive location (known as a "receptor") is usually defined as an area where human activity may be adversely affected when noise levels exceed predefined thresholds of acceptability or when noise levels increase by an amount exceeding predefined thresholds of change.

Automobile noise is a function of vehicle speed and engine noise. With changing gears, the noise levels tend to increase in a sawtooth kind of pattern as vehicular speed increases. The interaction of the road surface with the tires generates noise that increases with vehicle speed. At vehicular speeds below 30 miles per hour, the typical automobile noise spectrum is dominated by engine noise. At speeds higher than 30 miles per hour, the automobile noise signature is composed of a combination of lower frequency engine noise and higher frequency tire noise. The engine and tire noise for vehicular speeds above 30 miles per hour are comparable in noise level. Noise generated by buses and heavy trucks is also composed of engine and tire noise, but tire noise tends to dominate the noise signature at vehicular speeds above 30 miles per hour in trucks and buses. Cargo load normally does not significantly affect noise levels because increased load usually results in decreased vehicular speed and the effects cancel each other out. Because individual trucks and buses are noisier than individual automobiles, the concept of Noise passenger car equivalents (PCEs) is used.

Pursuant to Section 332.1 of the 2020 CEQR Technical Manual, the below values can be used to calculate vehicular noise using the following projections:

- Each Automobile or Light Truck: 1 Noise PCE
- Each Medium Truck: 13 Noise PCEs
- Each Bus: 18 Noise PCEs
- Each Heavy Truck: 47 Noise PCEs

To determine if the Proposed Action would result in an increase to existing Noise PCE values by 100 percent or more, a preliminary screening was conducted. This screening assesses the Noise PCE values of the incremental project-generated vehicles projected to arrive and depart the Project Development Sites during peak arrival and departure hours as determined by the transportation analysis vehicular trip assignment (Section 16) compared to the PCE values of existing background traffic recorded as part of the traffic data collection for the Transportation Analysis.

Noise PCE Screening Assumptions

The existing vehicles for the Noise Location 1 PCE Screening are sourced from 2021 Turning Movement Count (TMC) data at 33rd Road and 11th Street (all movements). The existing vehicles for the Noise Location 2 PCE screening are sourced from TMC data at 33rd Road and 11th Street (northbound only) and 34th Avenue and 11th Street (southbound only). The existing vehicles for the Noise Location 3 PCE are sourced from 2021 Turning Movement Count (TMC) data at 34th Avenue and 11th Street (all movements). Lastly, the existing vehicles for the Noise Location 4 PCE screening are sourced from TMC data at 33rd Road and 12th Street (northbound only). See **Table 2.19-12** to **Table 2.19-15** below for the TMC data used to conduct the Noise PCE Screening.

Existing trucks recorded in the TMC data were distributed between heavy and medium based on the distribution of heavy vs. medium trucks counted during noise monitoring for the respective location and peak hour (*See* **Table 2.19-9** through **Table 2.19-11** above). For any location peak hour where no trucks were

recorded concurrent with noise monitoring, 100% medium trucks were assumed under existing conditions for a more conservative analysis.

Noise PCE Screening Conclusion

Per the CEQR Technical Manual, if existing passenger car equivalent (PCE) Noise values would not increase by 100 percent or more due to a Proposed Action, a detailed analysis is not required. A Noise PCE screening was conducted for Noise Monitoring Locations 1 through 4. The results are included in **Appendix C**. The Proposed Action would not result in an increase to existing Noise PCE values by greater than 100% at the bounding roadways during the AM, Midday, PM peak hours. Therefore, a detailed Noise PCE Analysis is not warranted.

However, if there are significant differences between traffic counts from the noise measurement and the existing traffic condition analyzed in the Transportation chapter, it is reasonable to believe that traffic counts and noise during the noise measurement are not an accurately reliable representation of typical existing traffic and traffic noise. Therefore, measured noise levels were revised to reflect traffic noise generated by existing traffic conditions analyzed in the Transportation chapter. Noise PCE proportional calculations were conducted to compare the existing Noise PCEs referenced from the traffic data collected as part of the Transportation Analysis to the Noise PCEs referenced from the traffic data collected concurrently with noise monitoring in order to determine any additional attenuation requirements for the proposed community facility without dwelling units, trade school, commercial office and artist studio uses. The resulting Noise PCE proportional calculation results are provided below in **Table 2.19-12** to **Table 2.19-15**.

Table 2.19-12: Location 1 TMC Data (33 Rd and 11th St), Existing Noise PCEs, and Attenuation Requirements						
	Existing Vehicle Counts AM	**Existing AM Peak Hour Noise PCE Value**	**Existing Vehicle Counts MD**	**Existing MD Peak Hour Noise PCE Value**	**Existing Vehicle Counts PM**	**Existing PM Peak Hour Noise PCE Value**
Car/Taxi/Van/Light Truck/SUV	175	175	235	235	224	224
Medium Truck	8	98	12	156	9	117
Heavy Truck	3	118	0	0	0	0
Bus	12	216	4	72	6	108
Total Noise PCE	-	606	-	463	-	449
% of Noise PCEs from Location 1 Noise Monitoring Traffic Data	-	-24%	-	44%	-	48%
Location 1 L10 Noise Level	68.0		**71.5**		69.5	
Required Attenuation	**28 dBA**					

Notes:
-Bold denotes highest peak hour L10 noise level
-Required attenuation for community facility without dwelling units, trade school, commercial office and artist studio uses

Table 2.19-13: Location 2 TMC Data (11th St between 33rd Rd and 34th Ave), Existing Noise PCEs, and Attenuation Requirements						
	Existing Vehicle Counts AM	**Existing AM Peak Hour Noise PCE Value**	**Existing Vehicle Counts MD**	**Existing MD Peak Hour Noise PCE Value**	**Existing Vehicle Counts PM**	**Existing PM Peak Hour Noise PCE Value**
Car/Taxi/Van/Light Truck/SUV	173	173	209	209	193	193
Medium Truck	20	262	14	182	12	156
Heavy Truck	3	135	0	0	0	0
Bus	14	252	4	72	5	90
Total Noise PCE	-	822	-	463	-	439
% of Noise PCEs from Location 2 Noise Monitoring Traffic Data	-	8%	-	145%	-	257%
Location 2 L10 Noise Level	69.5		71.5		69.0	
Location 2 L10 Noise Level with Noise PCE Proportional Calculations	NA		**75.4**		74.5	
Required Attenuation	**31 dBA**					

Notes:
-Highlighted cells denote peak hours warranting Noise PCE Proportional Calculations
-Bold denotes highest peak hour L10 noise level
-Required attenuation for community facility without dwelling units, trade school, commercial office and artist studio uses

Table 2.19-14: Location 3 TMC Data (34 Ave and 11th St), Existing Noise PCEs, and Attenuation Requirements						
	Existing Vehicle Counts AM	**Existing AM Peak Hour Noise PCE Value**	**Existing Vehicle Counts MD**	**Existing MD Peak Hour Noise PCE Value**	**Existing Vehicle Counts PM**	**Existing PM Peak Hour Noise PCE Value**
Car/Taxi/Van/Light Truck/SUV	438	438	442	442	486	486
Medium Truck	36	468	24	312	19	247
Heavy Truck	0	0	8	376	0	0
Bus	29	522	9	162	10	180
Total Noise PCE	-	1428	-	1292	-	913
% of Noise PCEs from Location 3 Noise Monitoring Traffic Data	-	46%	-	122%	-	63%
Location 3 L10/Leq Noise Level	**75.3**		71.0		71.4	
Location 3 L10 Noise Level with Noise PCE Proportional Calculations	NA		74.5		NA	
Required Attenuation	**31 dBA**					

Notes:
-Highlighted cells denote peak hours warranting Noise PCE Proportional Calculations
-AM/PM noise levels reference Leq value as shown in **Table 2.19-6 a**bove, as the Leq exceeded the L10 noise levels during these peak hours
-Bold denotes highest peak hour L10/Leq noise level
-Required attenuation for community facility without dwelling units, trade school, commercial office and artist studio uses

Table 2.19-15: Location 4 TMC Data (12th St between 34th Ave and 33rd Rd), Existing Noise PCEs, and Attenuation Requirements						
	Existing Vehicle Counts AM	**Existing AM Peak Hour Noise PCE Value**	**Existing Vehicle Counts MD**	**Existing MD Peak Hour Noise PCE Value**	**Existing Vehicle Counts PM**	**Existing PM Peak Hour Noise PCE Value**
Car/Taxi/Van/Light Truck/SUV	100	100	137	137	139	139
Medium Truck	7	91	8	104	3	39
Heavy Truck	0	0	0	0	0	0
Bus	10	180	0	0	1	18
Total Noise PCE	-	371	-	241	-	196
% of Noise PCEs from Location 4 Noise Monitoring Traffic Data	-	234%	-	159%	-	151%
Location 4 L10/Leq Noise Level	68.0		64.0		64.6	
Location 4 L10/Leq Noise Level with Noise PCE Proportional Calculations	**73.2**		68.1		68.6	
Required Attenuation	**31 dBA**					

Notes:
-Highlighted cells denote peak hours warranting Noise PCE Proportional Calculations
-PM noise levels reference Leq value as shown in **Table 2.19-7 a**bove, as the Leq exceeded the L10 noise levels during this peak hour
-Bold denotes highest peak hour L10/Leq noise level
-Required attenuation for community facility without dwelling units, trade school, commercial office and artist studio uses

Stationary Source

It is assumed that the building mechanical systems (i.e., HVAC systems) would be designed to meet all applicable noise regulations (i.e., Subchapter 5, §24-227 of the New York City Noise Control Code, the New York City Department of Buildings Code) and to avoid producing levels that would result in any significant increase in ambient noise levels. Therefore, the Proposed Actions would not result in any significant adverse noise impacts related to building mechanical equipment.

Determination of Impacts/Building Attenuation Requirements

The 2020 *CEQR Technical Manual* contains noise exposure guidelines. For a residential use, an L_{10} of between 65 and 70 dB(A) is identified as marginally acceptable general external exposure. An L_{10} of between 70 and 80 dB(A) is identified as marginally unacceptable general external exposure.

- Based on the proportional Noise PCE calculations provided in **Table 2.19-12**, the highest recorded L_{10} at Location One (1) was 71.5 dB(A) during the midday monitoring period.
- Based on the proportional Noise PCE calculations provided in **Table 2.19-13**, the highest recorded L_{10} at Location Two (2) of the subject property was 75.4 dB(A) during the midday monitoring period.
- Based on the proportional Noise PCE calculations provided in **Table 2.19-14**, the highest recorded L_{eq} at Location Three (3) of the subject property was 75.3 dB(A) during the morning monitoring period.
- Based on the proportional Noise PCE calculations provided in **Table 2.19-15**, the highest recorded L_{10} at Location Four (4) of the subject property was 73.2 dB(A) during the morning monitoring period.

Based on the results of the noise monitoring and Noise PCE proportional calculations and the requirements of ZR 123-32[11], 35 dB(A) of attenuation would be required for all facades of the Affected Area for dwelling units.

Based on the results of the noise monitoring and the Noise PCE proportional calculations, and as shown in **Figure 2.19-2,** the following window/wall attenuations will be required for community facility uses without dwelling units:

Projected Development Site 1: A 28 dB(A) window/wall attenuation will be required on the northern (33rd Road) and the western facade (11th Street) for 50' from the northern façade, as well as the eastern façade (12th Street) for 50' from the northern façade. The remainder of the eastern and western façades will require a 31 dB(A) window/wall attenuation. The southern façade facing 34th Avenue will require a 31 dB(A)

[11] In *Special Mixed Use Districts*, all new *dwelling units* shall be provided with a minimum 35dB(A) of window wall attenuation to maintain an interior noise level of 45dB(A) or less, with windows closed, and shall provide an alternate means of ventilation. However, upon application to the Office of Environmental Remediation (OER) by the owner of the affected *building*, consistent with its authority under the provisions of Section **11-15** (Environmental Requirements) with respect to (E) designations, OER may modify the requirements of this Section, based upon new information, additional facts or updated standards, as applicable, provided that such modification is equally protective. In such instances, OER shall provide the Department of Buildings with notice of such modification, stating that it does not object to the issuance of a building permit, or temporary or final certificate of occupancy

window/wall attenuation for 50' from the eastern and western façades, respectively. The remainder of the southern façade will not require any attenuation.

Projected Development Site 2: A 31 dB(A) window/wall attenuation will be required on the southern façade (34th Avenue) and the eastern façade (12th Street). The northern façade (facing 33rd Road) will require a 31 dB(A) window/wall attenuation for 50' from the eastern and western façades, respectively. The remainder of the northern façade will not require any attenuation. The western façade (11th Street) will require a 31 dB(A) window wall attenuation as well as 50' from the west on the northern and southern façades adjacent to Block 318, Lot 11. The remainder of the northern, southern, and western façades adjacent to Block 318, Lot 11 will require no attenuation.

Potential Development Site 1: A 31 dB(A) window/wall attenuation will be required for the western façade (11th Street) as well as 50' on the northern and southern facades from the west. However, Potential Development Site 1 is assumed to be developed with residential and commercial retail uses only. As commercial retail use is not noise sensitive and as residential uses are required to provide a minimum of 35 dBA window/wall attenuation per ZR 123-32, no noise E-Designation is proposed for Potential Development Site 1.

The attenuation requirements are for the community facility without dwelling units and trade school. Commercial office and artist studio uses would require attenuation 5 dBA less than specified above.

Based on the noise monitoring results, an E-Designation related to noise is to be placed on the Projected Developments Sites and is described below. ZR 123-32 mandates a minimum of 35 dBA of attenuation for new dwelling units within MX districts, and therefore the below E-Designations are for future commercial office uses, artist's studios, trade school, and other community facility uses without dwelling units.

(E-661):

Projected Development Site 1 (Block 318 / Lots 15, 22): In order to ensure an acceptable interior noise environment, future trade school/commercial office/artist's studio uses must provide a closed-window condition with a minimum of 28 dBA window/wall attenuation on the facades facing 33rd Road and the facades facing 11th Street within 50 feet of 33rd Road and the facades facing 12th Street within 50 feet of 33rd Road and 31 dBA of attenuation on the facades facing 11th Street beyond 50 feet of 33rd Road and the facades facing 12th Street beyond 50 feet of 33rd Road and the facades facing 34th Avenue within 50 feet of 11th Street and 12th Street to maintain an interior noise level not greater than 45 dBA for trade school uses or not greater than 50 dBA for commercial office and artist's studio uses as illustrated in the EAS. To maintain a closed-window condition, an alternate means of ventilation must also be provided. Alternate means of ventilation includes, but is not limited to, air conditioning.

Projected Development Site 2 (Block 318 / Lot 1): In order to ensure an acceptable interior noise environment, future commercial office uses and community facility uses without dwelling units must provide a closed-window condition with a minimum of 31 dBA window/wall attenuation on the façades facing 34th Avenue and the facades facing 12th Street and the facades facing 33rd Road within 50 feet of 11th Street

and 12th Street and the facades facing 11th Street within 50 feet of 11th Street and the facades facing Block 318, Lot 11 within 50 feet of 11th Street to maintain an interior noise level not greater than 45 dBA for community facility uses without dwelling units or not greater than 50 dBA for commercial office uses as illustrated in the EAS. To maintain a closed-window condition, an alternate means of ventilation must also be provided. Alternate means of ventilation includes, but is not limited to, air conditioning.

Figure 2.19-2 Attenuation Requirements



Chapter 21: Neighborhood Character

According to the *2020 CEQR Technical Manual*, a neighborhood character assessment considers how elements of the environment combine to create the context and feeling of a neighborhood and how a project may affect that context and feeling. Thus, to determine a project's effects on the neighborhood character, the elements that contribute to a neighborhood's context and feeling are considered together. These elements may include land use, zoning, public policy, socioeconomic conditions, open space, historic and cultural resources, urban design, visual resources, shadows, transportation, and noise. The study area for a preliminary analysis of neighborhood character is typically consistent with the study areas of the relevant technical areas under CEQR that contribute to the defining elements of the neighborhood. The study area should generally extend to a 400-foot radius around the Affected Area.

Preliminary Analysis

Existing Conditions

The 400-foot study area is generally bounded by Broadway to the north, 13th Street to the east, 35th Avenue to the south, and 9th Street to the west, which is characterized by an eclectic of mix residential, commercial, light industrial, community facility uses, and vacant land. The predominant land uses in the study area are light industrial and residential. The lots and buildings housing these uses vary significantly in height and bulk. Directly abutting the study area on all frontages are a mix of large lot manufacturing, small scale industrial, warehousing, and commercial uses along with a few two- and three- family, two-story residential buildings sitting directly across from the study area and three- to five- story multi-family buildings present at the intersection of 34th Avenue and 11th Street. Significantly taller and more uniformly residential uses are located to the east and southeast of the project site. Further to the east and southeast on the edges of the study area and beyond is a blend of two- and three- family residential dwellings, multi-family dwellings with small and large scale industrial, manufacturing and commercial auto-body type uses.

Generally, residential uses present to the west of the study area are characterized by two- to four-story brick buildings, used as two- and three-family dwelling buildings and multi-family walk-up buildings, which typically are located midblock along 9th, 10th, and 11th Streets. A large NYCHA development called Ravenswood Houses is located at the southeast corner of the study area, which takes up nearly four blocks with 31 six- and seven-story elevator residential buildings. A planned residential development located one block north between 13th and 14th Streets and partially within the 400-foot study area is composed of 170 semi-attached, three- story two-family townhouses.

Industrial uses within the study area also vary in size and intensity with a range of uses, including a variety of small-scale auto-body and auto-repair facilities, warehouses, bakery wholesalers, maintenance and construction wholesalers, and media studios. Other notable uses in the study area include Long Island City High School to the northeast and The Noguchi Museum, Socrates Sculpture Park, Costco, and Rainey Park to the northwest.

Located at the north end of the block, Projected Development Site 1 (Block 318, Lots 15 & 22) is owned and controlled by the Applicant. Lot 15 is developed with a single-story industrial building currently occupied by Lady Linda Cake Company as a bakery warehouse and Central Construction Management as general office space. Lot 22 is also developed with a single-story industrial building currently occupied by Automated Bread Distributing as a wholesale bakery and Control Cargo USA as general office space.

Projected Development Site 2 (Block 318, Lot 1) is also owned and controlled by the Applicant, which is improved with 3 separate industrial buildings. The tallest building is 3 stories and runs along the eastern portion of the block, which is currently occupied by Curb Mobility LLC as general office space and Metroshop Inc. as an auto repair shop. A 1-story building is located on the interior portion of the lot along 34th Avenue and is also occupied by Curb Mobility LLC. The third building is a 1-story accessory building to a parking lot for employees and work vehicles associated with the other two buildings on Lot 1.

Other lots within the primary study area are independently owned, where the existing structures include a two-story two-family residential building and an accessory metal shed on Block 318, Lot 9 and a one-story manufacturing building occupied by an auto repair shop on Block 318, Lot 11.

Future No-Action Condition

Under a future condition with No-Action, the Projected Development Sites (Block 318, Lots 1, 15, and 22) would remain in the existing condition, and no changes are anticipated. It is expected that the existing uses within the Affected Area would remain in the future without the Proposed Actions. Therefore, for the purposes of this analysis, it is assumed that the constituent elements of neighborhood character in the No-Action Condition would be consistent with the existing conditions.

Future With-Action Condition

A new 8-story, 95-foot-tall 338,474 GSF (284,331 ZSF; 4.98 FAR) mixed-use commercial and residential building would be developed on Projected Development Site 1. On floors 1 and 2, there would be 90,251 GSF (89,459 ZSF; 1.56 FAR) of commercial floor area. Proposed commercial uses would include 11,955 GSF of local retail stores (UG 6), 6,552 GSF for an artist's studio (UG 9), and 71,744 GSF for two trade schools and accessory offices (UG 9). The building would contain 204,831 GSF (194,873 ZSF; 3.40 FAR) of residential space on floors 3 through 9, totaling up to 229 dwelling units (approximately 850 ZSF average size), including 46 reserved as permanently affordable. 100 parking spaces would be required for the residential use, and all spaces would be provided at the cellar level per the Applicant's proposed plans in a 43,392 GSF enclosed garage accessible by a curb cut on 12th Street. The proposed building has a height of 95 feet after a 15-foot setback above the base height of 75 feet. The development would wrap the block, maintaining a continuous street wall on each frontage.

Projected Development Site 2 would be an 8-story, 95-foot-tall mixed-use commercial, community facility, industrial/manufacturing, and residential building with 163 dwelling units (approximately 850 ZSF average size), at least 33 of which would be permanently affordable. The building would contain 248,095 GSF (207,201 ZSF; 4.99 FAR), including 149,677 GSF (138,318 ZSF; 3.33 FAR) of residential use, 35,988 GSF

(34,519 ZSF; 0.83 FAR) of commercial use, 10,000 GSF (100,000 ZSF; 0.24 FAR) of community facility use, 27,109 GSF (24,364 ZSF; 0.59 FAR) of manufacturing use, and 25,321 GSF of cellar level parking. The ground floor would contain 12,086 GSF of local retail store uses (UG 6) and 27,109 GSF of food distribution warehouse uses (UG 16; no manufacturing on site), the second floor would contain 10,000 GSF of community facility (UG 4) and 23,902 GSF of general office uses, and floors three through nine would contain 149,677 GSF of residential uses. 60 residential accessory parking spaces would be required, and would be provided at the cellar level accessed from a curb cut on 11th Street.

In order to determine the Proposed Action's potential effects on neighborhood character, the elements that contribute to a neighborhood's context and feeling are considered both separately and cumulatively. The examination focuses on whether a defining feature of the neighborhood's character may be significantly affected, as further described below:

- **Land Use, Zoning, and Public Policy (See Chapter 4):** The Proposed Actions would not adversely impact the neighborhood in terms of land use, zoning, or public policy. Though the proposed rezoning would effectuate developments of residential, commercial, community facility, and light-industrial uses at a higher density than that is currently allowed within the study area, the permitted uses would be in character with the existing mixed residential, commercial, industrial, and institutional uses and the density would be consistent with nearby mid-rise multi-family buildings mostly along 34th and 35th Avenues, including Ravenswood Houses, a large NYCHA development complex to the southeast of the Affected Area which consists of 31 six- and seven-story elevator residential buildings, North Queensview Homes, a cooperative community with seven 14-story elevator residential buildings, and Queensview, a residential cooperative housing complex with 14 fifteen-story elevator buildings. Accordingly, the Proposed Action would not alter the overall land use patterns in the area or jeopardize the intent of the zoning resolution.

- **Socioeconomic Conditions (See Chapter 5):** Induced development resulting from the Proposed Actions would continue established trends of population growth in the area, would not add new population with much higher average incomes compared to the average incomes of the existing populations, and would not significantly affect socioeconomic conditions.

- **Community Facilities (See Chapter 6):** The Proposed Actions would result in a 1.07 percent increase in utilization from the No-Action Condition for Elementary Schools and a .61 percent increase for Primary Schools. Therefore, the Proposed Actions would not result in significant adverse impacts related to community facilities.

- **Open Space (See Chapter 7):** With the Proposed Actions, the residential total open space ratio would decrease by 2.22 percent from the No-Action condition. Given the proposed rezoning area's proximity to additional open space resources, the reconstructions taking place to improve the capability of the resources, and the current quality condition, variety, and relatively low utilization of existing open space resources, the reduction in the total open space ratio is ameliorated. Therefore, the Proposed Actions would not result in a significant adverse impact on open space within the study area.

- **Shadows (See Chapter 8):** The shadows derived from the Projected Development Sites associated with the Proposed Actions would not reach the sunlight sensitive resource, The Noguchi Museum, on three analysis days in March/September, May/August, and June. On December 21st, the shadows derived from the Projected Buildings would only affect the sunlight-sensitive resource for a 39-minute period in the morning with limited extent and duration. No adverse impact is expected on the Open Space Utilization or vegetation of the museum and therefore no further analysis is warranted.

- **Historic and Cultural Resources (See Chapter 9):** Though the LPC review identified two known Architectural resources, Noguchi Museum and Studio Complex (S/NR eligible property) and Former Barkin, Levin and Company Building (LPC eligible property), no potential impacts associated with the Proposed Development on the identified historic resources would occur as the Proposed Actions would not result in any types of visual and contextual impacts to the known historic resources and the Proposed Actions would encourage the design of new developments to be in character with the study area, which is predominately industrial, residential, commercial, community facility, and mixed-use.

- **Urban Design and Visual Resources (See Chapter 10):** The development facilitated by the Proposed Actions would not adversely impact any of the constituent urban design elements or impact the overall character of the neighborhood as it would not significantly change the pedestrian experience, nor would it disturb the vitality, walkability, or the visual character of the area. The development with ground floor commercial uses would improve walkability and the visual character of the area, and would also provide needed local serving retail uses.

- **Hazardous Materials (See Chapter 12):** A Phase I ESA was prepared for the Projected Development Sites, where RECs, HRECs and VECs were identified related to the Subject Properties. As the Applicant-Owned lots are currently improved with structures that are fully tenanted with active businesses and a Phase II ESA would require demolition of the structures on the Applicant sites, it would not be possible to conduct Phase II ESA until construction activities began. Therefore, an E-Designation will be mapped on the Projected and Potential Development Sites. With the (E) designation in place, no significant adverse impacts related to hazardous materials are expected.

- **Transportation (See Chapter 16):** The Proposed Actions would not result in a development that would have a significant adverse impact on transportation within the study area.

- **Air Quality (See Chapter 17):** The Proposed Actions would not result in a development that would have a significant adverse impact on the air quality within the study area or would receive industrial emissions that would have a significant adverse impact on the project occupants. The project-on-planned and project-on-project HVAC model results were all below their respective standards, and an E-Designation related to HVAC stack heights will be placed on Projected and Potential Development Sites to ensure that the Proposed Actions would not result in significant adverse impacts associated with HVAC stationary source air emissions. Meanwhile, there are no active industrial emissions permits or large industrial emission sources within the 400- or 1,000-foot study areas. Additionally, there is no evidence present to conclude that there are illegal unpermitted air

emissions present in the study area. Lastly, the Proposed Action would not result in significant adverse impact related to mobile source air quality. Therefore, there does not appear to be any potentially significant impact in terms of air toxics to project occupants.

- **Noise (See Chapter 19):** The Proposed Actions would result in two mixed-use developments composed of residential, commercial, community facility, and light manufacturing uses that may be impacted by the ambient noise. Based on the noise monitoring results, an E-Designation related to noise is to be placed on the Projected Developments Sites and is described in the Noise Section above. ZR 123-32 mandates a minimum of 35 dBA of attenuation for new dwelling units within MX districts, and therefore the E-Designations are for future commercial office uses, artist's studios, trade school, and other community facility uses without dwelling units. With these provisions in place, no significant adverse impact related to noise would occur as a result of the Proposed Actions.

Combination of Moderate Effects: Based on the above findings, there would be no combination of moderate effects to several elements that cumulatively may affect neighborhood character.

Conclusion

As discussed above, the Proposed Actions would not in whole or from a specific technical study standpoint result in a significant impact to the neighborhood character, nor would have cumulative effects of two or more of the above technical areas have any significant impacts on the 400-foot study area.

Chapter 22: Construction

According to the *2020 CEQR Technical Manual*, construction impacts may be analyzed for any project that involves construction or could induce construction. For construction activities not related to in-ground disturbance, short-term construction generally does not warrant a detailed construction analysis. For example, the use of a property for construction staging activities is likely to only warrant analysis if this activity continues for a period of several years. Consideration of several factors, including the location and setting of the project in relation to other uses and intensity of construction activities are used to determine if a project's construction activities warrant analysis in one or more of the following technical areas:

- Transportation
- Air Quality or Noise
- Historic and Cultural Resources
- Hazardous Materials
- Natural Resources
- Open Space
- Socioeconomic Conditions
- Community Facilities
- Land Use and Public Policy
- Neighborhood Character
- Infrastructure

A preliminary construction analysis may be required because the proposed development would result in the following:

- Construction activities are considered long-term (Last longer than two years); or
- Short term construction activities would directly affect a technical area, such as impeding the operation of a community facility.
- Result in the closing, narrowing, impeding of traffic, transit, or obstruction of pedestrian or vehicular routes in proximity to critical land uses.
- Construction of multiple buildings where there is a potential for on-site receptors on buildings completed before the final build-out.
- The operation of several pieces of diesel equipment in a single location at peak construction.
- Closure of a community facility or disruption in its services.
- Disturbance of a site containing or adjacent to a site containing natural resources.
- Construction on multiple development sites in the same geographic area, such that there is the potential for several construction timelines to overlap or last for more than two years overall.

Analysis

Future No-Action Condition

In the Future No-Action Scenario, existing conditions would be expected to remain. The manufacturing and utility lots (Block 318, Lots 1, 11, 15, and 22) would continue to be illegal, non-conforming uses within the existing R5 zoning district.

Future With-Action Condition

Projected Development Site 1 (Block 318, Lots 15 and 22)
Projected Development Site 1 would be improved with a mixed commercial and residential building of 338,474 GSF (284,331 ZSF; 4.98 FAR), including 204,831 GSF (194,873 ZSF; 3.40 FAR) of residential use, 90,251 GSF (89,459 ZSF; 1.56 FAR) of commercial use, and 43,392 GSF of cellar level parking. The building would contain 229 dwelling units, 46 of which would be reserved as permanently affordable units. Proposed commercial uses would include 11,955 GSF of local retail stores (UG 6), 6,552 GSF for an artist's studio (UG 9), and 71,744 GSF for two trade schools and accessory offices (UG 9). 100 parking spaces would be provided in the 43,392 GSF enclosed garage at cellar level. The proposed building has a height of 95 feet (8 stories) after a 15-foot setback above the base height of 75 feet.

Projected Development Site 2 (Block 318, Lot 1)
Projected Development Site 2 would be improved with an 8-story, 95-foot-tall mixed-use building of 248,095 GSF (207,201 ZSF; 4.99 FAR), including 149,677 GSF (138,318 ZSF; 3.33 FAR) of residential use, 35,988 GSF (34,519 ZSF; 0.83 FAR) of commercial use, 10,000 GSF (100,000 ZSF; 0.24 FAR) of community facility use, 27,109 GSF (24,364 ZSF; 0.59 FAR) of manufacturing use, and 25,321 GSF of cellar level parking. There would be 163 dwelling units, at least 33 of which would be reserved as permanently affordable units. The ground floor would contain 12,086 GSF of local retail store uses (UG 6) and 27,109 GSF of food distribution warehouse uses (UG 16; no manufacturing on site), the second floor would contain 10,000 GSF of community facility (UG 4) and 23,902 GSF of general office uses, and floors three through nine would contain 149,677 GSF of residential uses. 60 residential accessory parking spaces would be provided at cellar level.

Build Year

The analysis year for the Proposed Actions is 2024 based on an 18-month period for environmental review and ULURP processes, and a 27.5-month construction timeline beginning May of 2022, including simultaneous construction for the two proposed buildings on Projected Development Site 1 and Projected Development Site 2, completing by September 2024 (See **Table 2.22-1** below).

Table 2.22-1: Construction Schedule

Projected Development Site		2021												2022											
		Q1			Q2			Q3			Q4			Q1			Q2			Q3			Q4		
		J	F	M	A	M	J	J	A	S	O	N	D	J	F	M	A	M	J	J	A	S	O	N	D
1	Demolition / Excavation / Foundation																								
	Superstructure / Exteriors/Core																								
	Interior Fit-Out																								
2	Demolition / Excavation / Foundation																								
	Superstructure / Exteriors/Core																								
	Interior Fit-Out																								

Projected Development Site		2023												2024											
		Q1			Q2			Q3			Q4			Q1			Q2			Q3			Q4		
		J	F	M	A	M	J	J	A	S	O	N	D	J	F	M	A	M	J	J	A	S	O	N	D
1	Demolition / Excavation / Foundation																								
	Superstructure / Exteriors/Core																								
	Interior Fit-Out																								
2	Demolition / Excavation / Foundation																								
	Superstructure / Exteriors/Core																								
	Interior Fit-Out																								

As shown above, the Applicant Development of Projected Development Site 1 and Projected Development Site 2 is anticipated to commence construction in May 2022. Construction activities would begin with abatement and the demolition of the existing structures on both Projected Development Sites, and would last until September 2022. Site preparation activities (excavation and foundation work) would commence in September 2022 and be completed in April 2023. The structures and building envelopes would begin construction in April 2023, and would be complete by October 2023, while exterior work on the structures would commence October 2023 and conclude in April 2024, and major construction-related activities would conclude with elevators, interior shell and core in May of 2024. Interior fit-out is projected to conclude by September of 2024.

The construction schedules and supporting letter from a Professional Engineer are attached in **Appendix F** to this EAS.

Transportation

According to the *CEQR Technical Manual*, a number of factors should be considered before determining whether a preliminary assessment of the effect of construction on transportation is needed including:

- Whether the project's construction would be located in a Central Business District (CBD) or along an arterial or major thoroughfare;
- Whether the project's construction activities would require closing, narrowing, or otherwise impeding moving lanes, roadways, key pedestrian facilities, parking lanes and/or parking spaces, bicycle routes and facilities, bus lanes or routes, or access points to transit; and
- Whether the project would involve construction on multiple development sites in the same geographic area, such that there is the potential for several construction timelines to overlap, and last for more than two years overall.

The two projected buildings (Projected Development Sites 1 and 2) would be constructed along two wide streets, 34th Avenue to the south as a minor arterial and 11th Street to the west as a major collector, both comprised of an 80-foot-wide divided roadway with one moving lane of traffic in each direction and curbside parking. In addition, the projected development would also impact two local roadways of approximately 50 feet in width each, including 33rd Road to the north with one moving lane of traffic in each direction and curbside parking, and 12th Street to the east with a single moving lane of traffic and curbside parking. The construction of the development sites may require the temporary closing of the sidewalks adjacent to Projected Development Sites 1 and 2 along 11th Street, 33rd Road, 12th Street, and 34th Avenue. At this time, it is anticipated that 11th Street and 12th Street would provide access points for construction vehicles entering the Project Sites and would require partial sidewalk closures, and that 34th Avenue would likely not require significant closure for the duration of the Project, nor 33rd Rd due to the narrowness of that roadway would not require closure. The sidewalks adjacent to the sites are likely to be reconstructed, which may temporarily impact pedestrian flow and the availability of parking spaces along these streets. However, changes to moving traffic lanes are not likely.

Figure 2.22-1: Temporary Sidewalk Closures and Pedestrian Routes to Existing Community Facilities

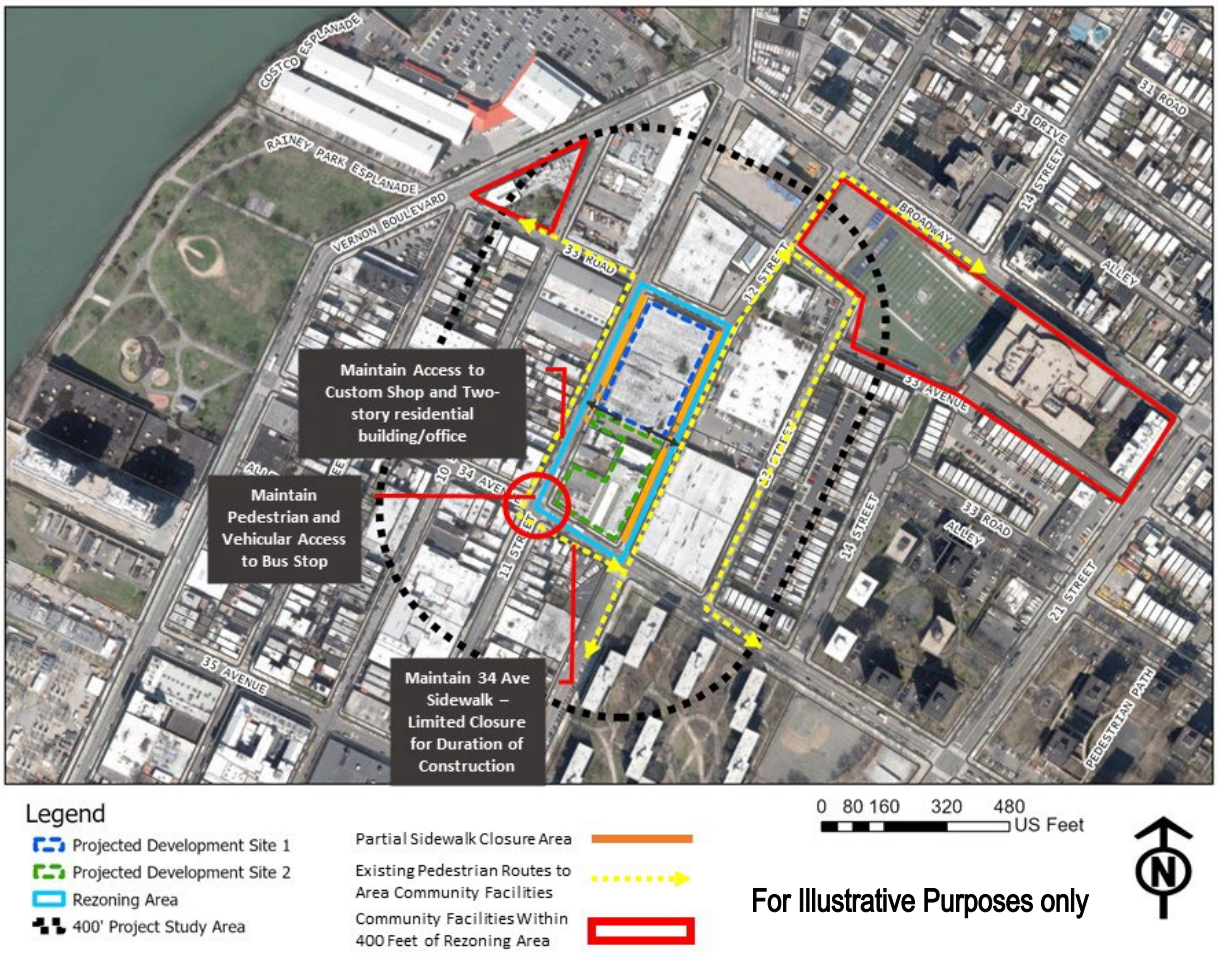

Located within a 400-foot radius of the Projected Development Sites, important community facilities in the area include a public school, Long Island City High School, and a community facility, The Noguchi Museum. However, any sidewalk closures adjacent to the Projected Development Sites would have no effect on the sidewalks adjacent to the community facilities as the construction sites are located over 350-feet from these facilities. Further, As shown in **Figure 2.22-1**, those sidewalks adjacent to the Project Site do not provide a direct or practical route (yellow dashed lines show existing practical sidewalk routes) for any pedestrian residing in the area or a visitor from outside the area to these locations (denoted by red polygons in **Figure 2.22-1**), and their potential temporary closure would not significantly affect existing walking paths to nearby destinations from area residents. The current use of the sidewalks adjacent to the Projected Development Sites are primarily utilized by workers and visitors located on the block subject to the Proposed Actions. The sidewalks affected by the proposed construction are not regularly utilized by area pedestrians as they are neither a destination for local residents nor provide a unique or important path to areas destinations or transit routes. Moreover, truck loading and access related to existing uses at the Affected Area do not make existing sidewalks accommodating for general use. Any potential closure of the sidewalks adjacent to the Projected Development Sites would be considered a routine closure that would be addressed by a permit and

pedestrian access plan issued by the NYC DOT Office of Construction Mitigation and Coordination at the time of closure.

Preliminarily, to assure pedestrian safety from construction at the Site, it is expected that partial closure of portions of sidewalk on 11th and 12th Street segments between 33rd Ave and 33rd Road would be necessitated for approximately 24 months up to interior fit-out, as denoted by the orange lines on **Figure 2.22-1**. As denoted on **Figure 2.22-1**, sidewalk closure on 11th Street will start at a point approximately 250 feet north from the intersection on 11th Street and 34th Ave and terminate at 33rd Rd and 11th St intersection to ensure continued access to Q104 Bus Shelter and access to the Custom Shop at 33-67 11th St and associated two-story residential/office structure. Pedestrian access will be maintained on 34 Ave between 11th and 12th Streets with only minimal short-term closures anticipated in order to maintain east-west access to transit stops on Vernon Blvd (although pedestrian access can be fully accommodated using the sidewalk on the southern extent of 34th Ave). Sidewalk abutting the Site on 33 Rd is not anticipated to require closure.

Given that the Affected Area on Queens Block 318 is an isolated block, whose sidewalks provides no direct or practical route to community facilities within 400 feet of the Project Site or other areas of significant interest, and that multiple existing equal or better pedestrian routes are available for area residents and visitors to the above identified community facilities in the area, the anticipated temporary closures of sidewalk, adjacent to the Affected Area are not expected to result in a safety impact or inconvenience area pedestrians.

The following Project Component Related to the Environment (PRCE) for construction transportation will be guaranteed by restrictive declaration.

Construction Pedestrian Circulation Plan: the applicant has committed to developing and submitting a plan for review and approval by NYC DOT to prepare a construction pedestrian circulation plan prior to obtaining demolition or building permits. Upon NYC DOT approval of the construction pedestrian circulation plan, the applicant has committed to implementing the plan according to procedures promulgated by NYC DOT's Office of Construction Mitigation and Coordination.

Although the project would involve simultaneous construction on multiple development sites on the same block, major construction activities (demolition to interior core and shell) on Projected Development Sites 1 and 2 would be considered short-term, respectively (less than two years). However, given the intensity of construction activities and total construction duration with fit-out of 27.5 months, a more detailed assessment of potential construction impact is provided below.

Project-Generated Construction Worker Pedestrian and Vehicular Traffic

Construction activities would generate construction worker auto trips and truck trips. Similar to other construction projects in New York City, most of the construction activity at the Development Site is expected to take place during the typical construction shift of 7:00 AM to 3:30 PM. The estimated daily vehicle trips were distributed throughout the workday based on projected work shift allocations and conventional arrival/departure patterns of construction workers and trucks. For analysis purposes, each truck delivery was assumed to result in two truck trips during the same hour (one "in" and one "out"), and each truck trip was

assumed to have a passenger car equivalent (PCE) of 2.0, consistent with *CEQR Technical Manual* guidance. For construction workers, the majority (80 percent) of arrival and departure trips are expected to take place during the hour before and after each shift. For construction trucks, deliveries would typically peak during the early morning, with an estimated 25 percent overlapping with construction worker arrival traffic.

Based on a 2017 survey of construction workers at a development site in Astoria, and guidance from NYCDOT, it is estimated that approximately 51 percent of construction workers' would travel to the Project Area by motor vehicle (approximately 48 percent by private autos and 3 percent by taxis/rideshare services), 44 percent by public transportation (4 percent by bus, and 40 percent by a combination of subway and bus), and 5 percent by walking, bicycle or other modes. It is also estimated that the auto occupancy would average approximately 1.5 persons per vehicle. These trip generation assumptions were used as the basis for assessing the potential transportation-related impacts during construction.

Table 2.22-2 below shows the average daily worker auto, truck, walk, and transit trips anticipated during project construction from 2022 through 2024. Peak construction conditions during the third and fourth quarters (Q3/Q4) of 2023 and the first quarter (Q1) of 2024 were considered for the analysis of potential transportation (traffic, transit, pedestrian, and parking) impacts as shown in **Table 2.22-3.**

As shown in **Table 2.22-3** below, the total transit and walk trips would not meet the 200 trips/hour *CEQR Technical Manual* analysis threshold for a detailed subway analysis, nor the 50 trips/hour/direction analysis threshold for a detailed bus analysis. Therefore, significant adverse impacts to subway and bus services are not expected to occur during peak construction periods. Similarly, as shown below, pedestrian demand from construction workers on the Projected Development Sites (both walk-only trips and trips to/from area transit services) would not meet the 200 trips/hour *CEQR Technical Manual* analysis threshold for a detailed pedestrian analysis for any construction peak hours. Significant adverse pedestrian impacts are therefore not expected to occur during the peak construction periods. During construction, where sidewalk closures are required, adequate protection or temporary sidewalks would be provided in accordance with NYCDOT-OCMC requirements.

Table 2.22-2: Average Daily, Monthly, Quarterly Construction Trips by Mode

SF	Site		2022												2023												2024											
			1	2	3	4	5	6	7	8	9	10	11	12	1	2	3	4	5	6	7	8	9	10	11	12	1	2	3	4	5	6	7	8	9	10	11	12
338,474	1	Workers					46	46	46	46	46	46	46	46	46	46	46	46	153	153	153	153	153	153	153	153	153	153	153	153	153	121	121	121	121			
		Trucks					18	18	18	18	18	18	18	18	18	18	18	18	19	19	19	19	19	19	19	19	19	19	19	19	19	9	9	9	9			
248,095	2	Workers					34	34	34	34	34	34	34	34	34	34	34	34	112	112	112	112	112	112	112	112	112	112	112	112	89	89	89					
		Trucks					13	13	13	13	13	13	13	13	13	13	13	13	14	14	14	14	14	14	14	14	14	14	14	14	7	7	7					
586,569																																						
		Workers	0	0	0	0	80	80	80	80	80	80	80	80	80	80	80	80	265	265	265	265	265	265	265	265	265	265	265	265	242	210	210	121	121	0	0	0
		Trucks	0	0	0	0	31	31	31	31	31	31	31	31	31	31	31	31	33	33	33	33	33	33	33	33	33	33	33	33	26	16	16	9	9	0	0	0
		Workers		0			53.3			80			80			80			203.3			265			265			265			239			151			0	
		Trucks		0			21			31			31			31			32.33			33			33			33			25			11			0	

Table 2.22-3: Peak Daily Construction Trips by Mode

Peak	2023 Q 3/4 & 2024 Q1
Worker Auto Trips	86
Worker Taxi Trips	22
Truck Trips	33
Truck Trips Factored*	66
Total	**174**
Peak	**2023 Q 3/4 & 2024 Q1**
Worker Subway/Bus trips	118
Worker Walk Trips	2
Total	**120**

*Trucks Factored by 2.0 to reflect number of axles

*Unfactored trucks not counted in total

Project-Generated Construction Worker Auto/Truck Traffic

As shown below in **Table 2.22-4**, a construction vehicle trip-generation was conducted to determine the hourly 2023 Q3/Q4 and 2024 Q1 peak construction auto, taxi and truck trips. Truck trips shown below in **Table 2.22-4** are multiplied by a Traffic PCE factor of 2.0 to reflect the number of axles.

Table 2.22-4: Hourly Construction Auto/Truck Trips 2023 Q3/4 and 2024 Q1

	Trucks			Worker Auto			Taxi			Total
	In	Out	Total	In	Out	Total	In	Out	Total	
6-7 AM	17	17	34	34	0	34	8	2	10	78
7-8 AM	7	7	14	9	0	9	1	0	1	24
8-9 AM	7	7	14	0	0	0	0	0	0	14
9-10 AM	7	7	14	0	0	0	0	0	0	14
10-11 AM	7	7	14	0	0	0	0	0	0	14
11AM-12 PM	7	7	14	0	0	0	0	0	0	14
12-1 PM	7	7	14	0	0	0	0	0	0	14
1-2 PM	3	3	6	0	0	0	0	0	0	6
2-3 PM	3	3	6	0	2	2	0	1	1	9
3-4 PM	2	2	4	0	34	34	2	8	10	48
4-5 PM	2	2	4	0	6	6	0	1	1	11

As shown above, construction traffic during peak construction is anticipated to result in 78 total trip-ends during the 6-7 AM period (AM peak hour), 14 trip-ends during the 12-1 PM period (Midday peak hour) and 48 trip ends during the 3-4 PM period (PM peak hour). A vehicle assignment was conducted for the AM, Midday, and PM peak hours based on the trip-generation provided in **Table 2.22-4** above and concludes that no study area intersections would exceed the CEQR threshold of 50 total vehicle trips during any peak hour of analysis. (See **Appendix F:** Peak Hour Construction Vehicle Assignments/Intersection Summary).

Any sidewalk or street closures would require the approval of the New York City Department of Transportation's Office of Construction Mitigation and Coordination (NYCDOT-OCMC), the entity that ensures critical arteries are not interrupted, especially in peak travel periods.

Based on the anticipated numbers of vehicle trips from construction trucks, workers, and taxis, incremental vehicle trips-ends during the peak construction periods are expected to be less than the incremental peak hour trips that would be generated with full build-out of the Proposed Development.

On the basis of the above, the construction of the proposed project would not be expected to result in significant adverse impacts on transportation.

Air Quality and Noise

According to the *CEQR Technical Manual*, an assessment of air quality and noise for construction activities is likely not warranted if the project's construction activities:

- Are considered short-term (less than two years);
- Are not located near sensitive receptors; and
- Do not involve construction of multiple buildings where there is a potential for on-site receptors on buildings to be completed before the final build-out.

Both Projected Development Sites are located near sensitive receptors as they all adjoin or are very close to existing residential development. In addition, located within 400 feet radius of the Projected Development Sites are a public school, Long Island City High School, and a community facility, The Noguchi Museum. The proposed development would not result in the construction of multiple buildings where there is a potential for on-site receptors on buildings to be completed before the final build-out, as both buildings would be completed and occupied on a similar schedule.

The *CEQR Technical Manual* states that if a project meets one or more of the criteria above, a preliminary air quality or noise assessment is not automatically required. Instead, various factors should be considered, such as the types of construction equipment (e.g., gas, diesel, electric), the nature and extent of any commitment to use the Best Available Technology (BAT) for construction equipment, the physical relationship of the project site to nearby sensitive receptors, the type of construction activity, and the duration of any heavy construction activity. These measures are discussed below.

Demolition, excavation, and foundation activities, which often generate the highest levels of air emissions, would be temporary and limited in duration and would take approximately 10 months to complete. These activities would be spread out over two separate locations on the block. In addition, any heavy equipment associated with the construction of the buildings (such as a crane) would operate from at least two different locations during construction.

Air Quality

The need for a quantitative air quality analysis is determined by several factors, such as the type of construction activity and the construction equipment used, the duration of any heavy construction activity, the physical relationship of the project site to nearby sensitive receptors (e.g., residential, hospital, school), and the commitment to use emission control measures.

Construction under the Proposed Actions is anticipated to occur from 2022 to 2024, where the major construction activities (demolition to interior core and shell completion) are expected to be completed over a period of 24 months. The level of construction activity would vary among the stages of construction, which generally include demolition and site clearing, excavation, foundation, superstructure, façade enclosure, and interior and finishes. The emissions generated in the excavation and foundation stages are mainly related to on-site diesel equipment, trucks emissions, and particulate matter (as fugitive dust) generated by excavation and earth-moving operations. Generally, significantly less emissions from on-site equipment are anticipated after the excavation and foundation stage of the construction. Other sources of emission, in addition to on-site emission sources, are construction-related on-road trucks and passenger vehicles used by construction workers.

The Project Area is located in an area where there are sensitive receptors, and the construction activities would involve heavy-duty diesel equipment and earth-moving operations. Therefore, a quantitative emission profile was undertaken to assess if a dispersion analysis is required, based on guidance from the New York City Department of City Planning (DCP). Equipment type and engine size and their emission, and vehicles emission were obtained from the approved CEQR action Astoria 31st Street Rezoning (CEQR No: 21DCP117Q, ULURP Nos: 210200ZMQ; N210201ZRQ), based on DCP guidance.

Pollutants of Concern

As required by the Clean Air Act, National Ambient Air Quality Standards (NAAQS) have been established for major air pollutants, known as criteria pollutants. In addition to the NAAQS, the New York City's *de minimis* criteria are used to determine the significance of the incremental increases in 8-hour carbon monoxide (CO) concentration and the 24-hour and annual particulate matter with aerodynamic diameter smaller than 2.5 microns ($PM_{2.5}$) concentrations. The NAAQS and *de minimis* are discussed in Chapter 11, "Air Quality."

The U.S. Environmental Protection Agency (EPA) mandates the use of ultra-low sulfur diesel (ULSD) fuel for all highway and non-road diesel engines. As such, sulfur oxides (SOx) emissions associated with the construction activities would be negligible. Therefore, the pollutants analyzed for the construction period were annual average nitrogen dioxide (NO_2), PM_{10}, $PM_{2.5}$, and CO.

Emission Reduction Program

Emission reduction measures concerning dust suppression measures, idling vehicles, and use of clean fuel would be implemented to reduce pollutants emissions. The following emission reduction measures are

specified in the New York City Air Pollution Code (New York City Administrative Code and Rules of the City of New York (RCNY)).

- Dust suppression measures would be implemented. Such measures would include, but not be limited to, wetting of construction material and particulate matter kept on-site (e.g., soil or debris piles), wetting where certain construction activities (e.g., drilling and grinding) occur, covering of spoil or loose material during transport and wetting of material prior to loading into trucks, removal of dust from adjacent streets and sidewalks, and requiring that vehicles entering or exiting the site travel at low speed.

- Idling restrictions require that no motor vehicle idle for longer than three minutes, unless the engine is used to operate a loading, unloading or processing device (e.g., concrete mixing trucks and concrete pump trucks).

- Ultra-low sulfur diesel (ULSD) would be used for all diesel fueled nonroad equipment, where the sulfur content in ULSD is 15 parts per million (ppm). The use of USLD is regulated by the EPA under the diesel fuel regulations. Diesel fuel contained as much as 5,000 ppm of sulfur before the EPA began regulating the sulfur content.

In addition to the required emission reduction measures specified above, the construction activities under the Proposed Actions are expected to implement additional measures. These control measures are aimed at reducing particulate matter emissions during construction (implementing these control measures could potentially decrease emissions of other pollutants). Commitments were specified to use the following emission control measures:

- Under the Proposed Actions, all diesel-powered non-road construction equipment with hp rating of 50 hp or greater would meet at least the Tier 3 emissions standards. In addition, all Tier 3 diesel-powered non-road construction equipment with hp rating of 50 hp or greater would utilize diesel particulate filter (DPF). The DPFs would either be installed by the original equipment manufacturer or retrofitted. The retrofitted DPFs would adhere to the specifications in the New York City Air Pollution Code.

- Under the Proposed Actions, dust suppression measures would require that vehicles entering or exiting the site travel at a speed no faster than 5 mile per hour.

Emissions Profile

Construction emission sources include non-road construction equipment, on-road vehicles, and dust-generating construction activities. Non-road construction equipment may include equipment operating on-site, such as cranes, excavators, and concrete pumps. On-road vehicles may include trucks (e.g., dump trucks) traveling on-site as well as on roadways and worker vehicles traveling on roadways.

Pollutants emission factors emitted by non-road construction equipment were developed with the EPA's Motor Vehicle Emission Simulator (MOVES) version 2014b NONROAD emission model[12], except the wheel loader(s), concrete pump(s), and pile driver(s) PM emission factors, which were based on Tier 3 engines retrofitted with DPF, to achieve 90 percent removal efficiency. The wheel loader(s) were based on 109 hp diesel engines. Tier 3 nonroad diesel engine standard for PM is 0.30 g/kW-hr for engine power category 100≤hp<175.[13] The concrete pump(s) and pile driver are based on 400 hp and 355 hp engines. Tier 3 nonroad diesel engine standard for PM is 0.20 g/kW-hr for engine power category 175≤hp<600.[14] Other equipment with hp rating greater than 50 hp were calculated as the average emission factors compiled in NONROAD for model years 2008-2011. All other nonroad construction equipment (equipment with hp rating less than 50 hp) were aggregated within the NONROAD model. MOVES2014b emission factor algorithm was used to calculate emissions generated by the trucks and worker vehicles. The MOVES model was discussed in Chapter 11, "Air Quality."

Trucks distribution (dump, concrete, and delivery trucks) was based on the stage of construction and to maximize emission (dump trucks traveling on-site generate significant amount of emission). Two delivery trucks per week were assumed during the excavation and foundation element of construction and three delivery trucks per week during the superstructure element of construction. Two concrete mixing trucks per day were assumed during the foundation to justify the use of the concrete pump(s). Concrete mixing trucks emissions during unloading were based on 60 minutes idle time. Dump trucks and delivery trucks were assumed to idle for 3 minutes while loading/off-loading.

PM_{10} and $PM_{2.5}$ fugitive dust emissions generated by traveling vehicles, material handling, and process operations were calculated using the EPA's *AP-42: Compilation of Air Emissions Factors*[15] manual. Predictive emission factors for vehicles traveling on paved roads were calculated using equations from EPA's AP-42 Chapter 13.2.1. Predictive emission factors for vehicles traveling on unpaved roads were calculated using equations from EPA's AP-42 Chapter 13.2.2. Silt loading factors for paved and unpaved roadways were obtained from the *CEQR Technical Manual*. Predictive emission factors for material handling and loading of trucks were calculated using the equation in the EPA's AP-42 Chapter 13.2.4 manual. In addition, wetting of piles and unpaved roads (trucks travel on-site) accounted for fifty percent control efficiency, and an additional fifty percent control efficiency for a maximum traveling speed of 5 mile per hour on-site (trucks travel on-site).

Based on the methodology above, the greatest PM and/or NOx emission would be during the last few months of the excavation and foundation element of construction. $PM_{2.5}$ 12-month rolling average emission would peak in September 2023 and NOx 12-month rolling average would peak in April 2023. The Proposed Actions construction-related emission would result in less emission than the approved CEQR Action Astoria 31st Street Rezoning (CEQR No: 21DCP117Q, ULURP Nos: 210200ZMQ; N210201ZRQ).

[12] EPA Motor Vehicle Emission Simulator (MOVES), User Guide for MOVES2014. EPA-420-B-14-055, July 2014.
[13] *Federal Register.* (1998). 63 (No. 205: October 23), 56969, 56970.
[14] *Federal Register.* (1998). 63 (No. 205: October 23), 56969, 56970.
[15] EPA. *Compilation of Air Pollutant Emission Factors AP-42 Fifth Edition, Vol. 1: Stationary Point and Area Sources*. https://www.epa.gov/air-emissions-factors-and-quantification/ap-42-compilation-air-emissions-factors#5thed (August 2020).

Conclusion

The emission profile was evaluated based on the implementation of certain emission reduction measures. Emission reduction measures include dust suppression measures, vehicle idling restrictions, use of ultra-low sulfur diesel (ULSD) fuel, and utilization of newer construction equipment. All diesel-powered non-road construction equipment with hp rating of 50 hp or greater would meet at least the Tier 3 emissions standards and the use of Diesel Particulate Filters (DPFs) for any piece of equipment. In addition, vehicles traveling on site would be required to travel at speed no faster than 5 mile per hour.

The project would make use of the Best Available Technology to minimize impacts to the residential buildings, public high school, and the museum in the vicinity of the Projected Development Sites.

As with most construction projects in the City, the proposed project would require the operation of several pieces of diesel equipment at one time during the heavier periods of construction, such as demolition and excavation. The Applicant would implement the following measures that would minimize air quality and noise impacts on the surrounding community.

- *Diesel Equipment Reduction*. Construction of the proposed project would minimize the use of diesel engines and use electric engines, to the extent practicable. This would reduce the need for on-site generators, and require the use of electric engines in lieu of diesel where practicable.

- *Clean Fuel*. To the extent practicable, ultra-low sulfur diesel (ULSD) would be used for diesel engines on the Projected Development Sites.

- *Best Available Tailpipe Reduction Technologies*. To the extent practicable, non-road diesel engines with a power rating of 50 horsepower (hp) or greater would utilize the best available tailpipe (BAT) technology for reducing diesel particulate matter (DPM) emissions. Diesel particle filters (DPF) have been identified as being the tailpipe technology currently proven to have the highest PM reduction capability.

- To the extent practicable, construction contracts would specify that all diesel non-road engines rated at 50 hp or greater would utilize DPFs, either installed on the engine by the original equipment manufacturer (OEM) or retrofit with a DPF verified by EPA or the California Air Resources Board, and may include active DPFs if necessary; or other technology proven to reduce DPM by at least 90 percent.

- *Utilization of Newer Equipment*. To the extent practicable, all non-road construction equipment in the project would meet at least the Tier 2 emissions standard, and construction equipment meeting Tier 3 and/or Tier 4 emissions standards would be used where conforming equipment is widely available, and the use of such equipment is practicable.

- *Dust Control*. Fugitive dust control plans will be implemented as part of the construction process. For example, stabilized truck exit areas would be established for washing off the wheels of all trucks that

exit the construction sites. Truck routes within the sites would be watered as needed to avoid the re-suspension of dust. All trucks hauling loose material will be equipped with tight fitting tailgates and their loads securely covered prior to leaving the sites. In addition to regular cleaning by the City, streets adjacent to the site would be cleaned as frequently as needed by the construction contractor. Water sprays will be used for all transfer of spoils to ensure that materials are dampened as necessary to avoid the suspension of dust into the air.

- *Restrictions on Vehicle Idling*. In addition to adhering to local laws restricting unnecessary idling on roadways, on-site vehicle idle time will also be restricted to three minutes, to the extent practicable, for all equipment and vehicles that are not using their engines to operate a loading, unloading, or a processing device (e.g., concrete mixing trucks) or otherwise required for the proper operation of the engine.

Overall, these air emission controls would significantly reduce DPM emissions to a level otherwise achieved by applying the currently defined best available control technologies under NYC Local Law 77. In addition, as stated in the *CEQR Technical Manual*, all the necessary measures would be implemented to ensure compliance with the NYC Air Pollution Control Code regulating construction-related dust emissions. Based on the project size and the construction work involved, construction activities for the proposed project would not be considered out of the ordinary or exceptional in terms of intensity and would be of a relatively short duration. Therefore, based on above and with the implementation of emissions control measures that are required by local law, the construction of the Projected Development Sites would not result in any significant adverse impacts on air quality.

Noise

While increases in ambient noise levels due to construction exceeding the CEQR impact criteria for two years or less may be noisy and intrusive, they are not considered to be significant adverse noise impacts. As described above, demolition to interior fit-out completion would occur over a period of 27.5 months. Demolition, excavation and foundation, which are the noisiest construction activities, would be temporary and limited in duration and would take approximately 12 months to complete, while superstructure and interior core and shell, and façade would take approximately 13 months to complete.

Construction noise is regulated by the NYC Noise Control Code and by EPA's noise emission standards for construction equipment. These local and federal requirements mandate that certain classifications of construction equipment and motor vehicles meet specified noise emission standards; that construction activities be limited to weekdays between the hours of 7AM and 6PM; and that construction materials be handled and transported in such a manner as not to create unnecessary noise. If weekend or after hour work is necessary, permits would be required to be obtained, as specified in the NYC Noise Control Code.

In addition to the minimum code requirements, the Applicants would utilize additional noise control measures (as described in the section below) to reduce the potential noise effects on the surrounding sensitive noise receptors. Therefore, considering the construction equipment and activities, Noise Code requirement,

additional noise control measures committed by the Applicant (identified below), and given project context, no significant adverse impacts are expected to occur as a result of the project construction.

Table 2.22-5: Typical Construction Equipment Sound Level and Mandated Quieter Construction Equipment Sound Levels for the Project

Equipment Description	Typical Lmax @ 50 feet (CEQR 2021 Table 22-1)	Proposed Equipment - Measured LMAX Sound Levels @ 50 feet
Excavator	85	75
Wheel Loader	80	70
Crane	85	75
Pile Driver	85	85
Generator	82	70
Compressor	80	70
Concrete Pump	82	72
Rebar Bender	80	70
Forklift	85	69
Concrete Trowler	85	69
Dump Truck	84	74
Concrete Mixer	85	75

Noise Reduction Measures

The construction of the Projected Development Sites would be required to follow the requirements of the New York City Noise Control code (known as Chapter 24 of the Administrative Code of the City of New York, or Local Law 113) for construction noise control measures. In addition to the minimum requirements, the Applicants would utilize additional noise control measures to reduce the potential noise effects on the surrounding sensitive noise receptors. Specific noise control measures would be incorporated into a Noise Mitigation Plan required under the New York City Noise Code. The measures to be taken for noise control include source controls and path controls.

Source controls are known as measures that reduce noise at the source. The source controls proposed below will be codified in a Restrictive Declaration requiring the implementation of these project components related to the environment (PCRE's) to preclude any impacts to noise related to construction activities at Projected

Development Sites. A construction manager and acoustic engineer has concurred that the below construction equipment source controls are achievable. The following source controls will be utilized at the Projected Development Sites during construction:

- Equipment that meets the sound level standards specified in Subchapter 5 of the New York City Noise Control Code would be utilized during the entirety of construction. **Table 2.22-5** shows the noise levels for typical construction equipment and the mandated noise levels for the equipment that would be used for construction of the Proposed Project.
- Independent environmental monitors would be implemented to verify and satisfy source control PCRE commitments proposed and mandated in **Table 2.22-5**.
- As electric power is expected to be available throughout each of the Projected Development Sites, electrically powered equipment such as welders and saws would be used over diesel-powered equipment, where feasible and practicable;
- The construction site would be configured to minimize backup alarm noise where possible. Additionally, trucks would not be allowed to idle more than three minutes at the Projected Development Sites based upon Title 24, Chapter 1, Subchapter 7, Section 24-163 of the New York City Administrative Code; and
- Contractors and subcontractors would be required to properly maintain their equipment and mufflers.

Path controls are known as measures that reduce noise between the source and receptor. Examples include placement of equipment, implementation of barriers, etc. A construction manager and acoustic engineer has concurred that the below construction equipment path controls are achievable. The path controls proposed below will be codified in a Restrictive Declaration requiring the implementation of these project components related to the environment (PCRE's) to preclude any impacts to noise related to construction activities at Projected Development Sites. The following path controls will be utilized at the Project Site during construction:

- Equipment with high noise emissions, such as cranes and concrete trucks, would be located away from and shielded from sensitive receptor locations when possible.
- Noise barriers that will be constructed of plywood or other materials will surround the entire construction site perimeter. This barrier will provide noise shielding. The barrier would be at least 12 feet tall and include a cantilever towards the construction work to further shield the upper floors of adjacent sensitive noise receptors. This would be a path control PCRE commitment to be codified in a restrictive declaration. Truck deliveries would occur behind these barriers where possible; and
- Path noise control measures such as portable noise barriers and enclosures would be utilized where feasible for certain dominant noise equipment such as generators and compressors.

Mobile Source Construction Noise Analysis

Pursuant to Section 111 of the *CEQR Technical Manual*, mobile sources are those noise sources that move in relation to a noise-sensitive receptor—principally automobiles, buses, trucks, aircraft, and trains. Each has its own distinctive noise character, and, consequently, an associated set of noise assessment descriptors.

For mobile sources, an initial noise assessment may be appropriate if a proposed action would generate additional project-generated vehicular traffic in an area where roadways currently carry no or very low traffic volumes, or where a nearby receptor would potentially be impacted by high ambient noise levels. Receptors are generally the subject of most noise impact analyses. A noise-sensitive location (known as a "receptor") is usually defined as an area where human activity may be adversely affected when noise levels exceed predefined thresholds of acceptability or when noise levels increase by an amount exceeding predefined thresholds of change.

Automobile noise is a function of vehicle speed and engine noise. With changing gears, the noise levels tend to increase in a sawtooth kind of pattern as vehicular speed increases. The interaction of the road surface with the tires generates noise that increases with vehicle speed. At vehicular speeds below 30 miles per hour, the typical automobile noise spectrum is dominated by engine noise. At speeds higher than 30 miles per hour, the automobile noise signature is composed of a combination of lower frequency engine noise and higher frequency tire noise. The engine and tire noise for vehicular speeds above 30 miles per hour are comparable in noise level. Noise generated by buses and heavy trucks is also composed of engine and tire noise, but tire noise tends to dominate the noise signature at vehicular speeds above 30 miles per hour in trucks and buses. Cargo load normally does not significantly affect noise levels because increased load usually results in decreased vehicular speed and the effects cancel each other out. Because individual trucks and buses are noisier than individual automobiles, the concept of noise passenger car equivalents (PCEs) is used.

Pursuant to Section 332.1 of the *CEQR Technical Manual*, the below values can be used to calculate vehicular noise using the following projections:

- Each Automobile or Light Truck: 1 Noise PCE
- Each Medium Truck: 13 Noise PCEs
- Each Bus: 18 Noise PCEs
- Each Heavy Truck: 47 Noise PCEs

To determine if the Proposed Actions would result in an increase to existing noise PCE values by 100 percent or more, a preliminary screening was conducted. This screening assesses the noise PCE values of the vehicles projected to arrive at the construction sites during peak arrival and departure hours as determined by the construction traffic forecast, compared to the PCE values of existing background traffic recorded for the Levels of Service (LOS) analysis that was completed for the transportation analysis associated with the Proposed Actions.

Noise PCE Screening Assumptions

The With-Action project generated construction vehicle volumes for the worst-case year and quarter (2023 Q3/4 and 2024 Q1 (See **Table 2.22-4**) were referenced to determine the Noise PCE equivalent of project-generated trucks and autos/taxis. Project-generated construction trucks shown in **Table 2.22-4** above were divided by 2 for the purposes of the noise PCE screening in order to evaluate the raw total number of truck trips without the truck traffic PCE factor. The conversion to PCEs conservatively assumes that all of the project-generated trucks are heavy trucks. The With-Action AM peak hour is 6-7 AM, the With-Action MD peak hour is 12-1 PM, and the With-Action PM peak hour is 3-4 PM. These AM, MD and PM vehicles were

assigned to the local network (See **Appendix F**) and screened at four locations as identified in the Noise Section (See **Figure 2.19-1**).

The existing vehicles for the Noise Location 1 PCE Screening are sourced from 2021 Turning Movement Count (TMC) data at 33rd Road and 11th Street (all movements). The existing vehicles for the Noise Location 2 PCE screening are sourced from TMC data at 33rd Road and 11th Street (northbound only) and 34th Avenue and 11th Street (southbound only). The existing vehicles for the Noise Location 3 PCE are sourced from 2021 Turning Movement Count (TMC) data at 34th Avenue and 11th Street (all movements). Lastly, the existing vehicles for the Noise Location 4 PCE screening are sourced from TMC data at 33rd Road and 12th Street (northbound only). Existing trucks recorded in the TMC data were distributed between heavy and medium based on the distribution of heavy vs. medium trucks counted during noise monitoring for the respective location and peak hour (*See* **Table 2.19-9** through **Table 2.19-11** in the Noise Section above). Additionally, for any location peak hour where no trucks were recorded concurrent with noise monitoring, 100% medium trucks were assumed under existing conditions for a more conservative analysis.

Noise PCE Screening Conclusion

Per the CEQR Technical Manual, if existing passenger car equivalent (PCE) Noise values would not increase by 100 percent or more due to a Proposed Action, and a detailed analysis is not required. A Noise PCE screening was conducted for Noise Monitoring Locations 1 through 4. The results are included in **Appendix F.**

Per the *CEQR Technical Manual*, if existing PCE noise values would not increase by 100 percent or more due to a proposed action, a detailed analysis is not required. The Proposed Actions would not result in an increase to existing noise PCE values by greater than 100% at the bounding roadways during any of the AM, Midday, or PM peak hours. Based on the preliminary noise PCE analysis and given project contexts, no significant adverse noise impact would occur and detailed noise PCE analysis is not warranted.

Historic and Cultural Resources

As discussed in **Chapter 9** *Historic and Cultural Resources*, the Landmarks Preservation Commission has determined that the Affected Area is within the 400-foot radius of two eligible architectural resources. Therefore, construction measures appropriate to this context should be identified.

The City has two procedures for avoidance of damage to historic structures from adjacent construction, the second of which is not applicable because neither building is considered listed as a historic resource. All buildings are provided some protection from accidental damage through New York City Department of Buildings (DOB) controls that govern the protection of any adjacent properties from construction activities, under Building Code Section 27-166 (C26-112.4). For all construction work, Building Code section 27-166 (C26-112.4) serves to protect buildings by requiring that all lots, buildings, and service facilities adjacent to foundation and earthwork areas be protected and supported in accordance with the code requirements.

The second protective measure applies only to designated NYCL and S/NR listed historic buildings that are located within 90 linear feet of a proposed construction site. For these structures, the DOB's Technical Policy and Procedure Notice (TPPN) #10/88 is applicable. The DOB's TPPN 10/88 supplements the standard building protections afforded by the Building Code C26-112.4 by requiring, among other things, a monitoring program to reduce the likelihood of construction damage to adjacent LPC-designated or S/NR-listed resources (within 90 feet), and to detect at an early stage the beginnings of damage so that construction procedures can be changed. The 90-foot distance is recognized as being close enough to potentially experience adverse construction-related impacts from ground-borne construction period vibrations, falling debris, and/or collapse. The Noguchi Museum and Studio Complex is not within 90 feet of the Proposed Actions, but the Barkin, Levin and Company Building is within 90 feet, and may therefore be protected under the measures of TPPN 10/88 if it were to become a listed historic resource.

By following the protection measures under DOB Code Section 27-166 (C26-112.4) and DOB's TPPN #10/88 (if applicable at the time of construction) for those applicable resources, demolition and/or construction work on the Projected Development Sites would not cause any significant adverse construction-related impacts to nearby historic and cultural resources.

Conclusion

Construction activities at Projected Development Sites 1 and 2 would be completed within a 27.5-month timeline from May 2022 to September 2024, consisting of a single phase of construction for both sites. Construction would be performed subject to relevant EPA, DEP, DOT and DOB codes and regulations to ensure minimal construction impacts. With the construction control and protective measures identified above, no impacts to transportation, air quality, noise, or historic buildings would occur.

On the basis of the above analysis, the Proposed Actions would not have any potentially significant adverse construction impacts, and further analysis would not be warranted.

APPENDIX A

AGENCY CORRESPONDENCE

Landmarks Preservation Commission

1 Centre Street
9th Floor North
New York, NY 10007

Voice (212)-669-7700
Fax (212)-669-7960
http://nyc.gov/landmarks

ENVIRONMENTAL REVIEW

Project number: LA-CEQR-Q
Project: 33-33 11th Street
Date Received: 4/8/2020

Comments:

Properties with no Architectural or Archaeological significance:

1) 33-80 12 STREET, BBL: 4003180001
2) 33-71 11 STREET, BBL: 4003180009
3) 33-67 11 STREET, BBL: 4003180011
4) 33-51 11 STREET, BBL: 4003180015
5) 33-33 11 STREET, BBL: 4003180022

Within the radius:
NOGUCHI MUSEUM AND STUDIO COMPLEX, 9-01 33 ROAD, 32-55 VERNON AVENUE, AND 33-38 10 STREET DETERMINED NR ELIGIBLE BY LPC WITHIN RADIUS; LPC ELIGIBLE FORMER BARKIN, LEVIN AND COMPANY BUILDING, 12-12 33 AVENUE.

Gina Santucci 5/1/20

SIGNATURE DATE
Gina Santucci, Director of Environmental Review

34903 FSO2 GS

Landmarks Preservation Commission

1 Centre Street
9th Floor North
New York, NY 10007

Voice (212)-669-7700
Fax (212)-669-7960
http://nyc.gov/landmarks

ENVIRONMENTAL REVIEW

Project number: DEPARTMENT OF CITY PLANNING / 21DCP118Q
Project: 33-33 11th Street
Date Received: 1/19/2021

The LPC is in receipt of the EAS and Shadow studies of 12/21/20. There are no additional concerns.



1/19/2021

SIGNATURE DATE
Gina Santucci, Environmental Review Coordinator

File Name: 34903_FSO_GS_01192021.docx

Environmental Protection

Vincent Sapienza, P.E.
Commissioner

Angela Licata
Deputy Commissioner of Sustainability

59-17 Junction Blvd.
Flushing, NY 11373

Tel. (718) 595-4398
Fax (718) 595-4422
alicata@dep.nyc.gov

October 8, 2020

Annabelle Meunier
Team Leader
Environmental Assessment and Review Division
New York City Department of City Planning
120 Broadway, 31st Floor
New York, New York 10271

Re: 11th Street & 34th Avenue Rezoning
Block 318, Lots 1, 9, 11, 15, and 22
CEQR # 77DCP735Q

Dear Ms. Meunier:

The New York City Department of Environmental Protection, Bureau of Sustainability (DEP) has reviewed the August 2020 Environmental Assessment Statement (EAS) and the November 2019 Phase I Environmental Site Assessment Report (Phase I) prepared by Equity Environmental Engineering, on behalf of 33-33 11th Street LLC., (applicant), for the above referenced project located between 33rd Road and 34th Avenue in the Astoria neighborhood of Queens Community District 1. It is our understanding that the applicant is seeking:

1. A zoning map amendment from the New York City Department of City Planning (DCP) to rezone Block 318, Lots 1, 9, 11, 15, and 22 from a R5 zoning district to a M1-5/R6A zoning district.
2. A zoning text amendment to Appendix F of the Zoning Resolution (ZR) to designate the project area as a Mandatory Inclusionary Housing Area.
3. A zoning text amendment to Article 12, Chapter 3 of the ZR to establish a mixed-use district and to increase the maximum permitted height to 95 feet and the maximum base height to 75 feet.

The proposed actions would facilitate the redevelopment of Block 318, Lots 15 and 22 (Projected Development Site 1) with a new 8-story, 338,474 gross square feet (gsf), mixed-use building containing 204,831 gsf of residential space (205 dwelling units), 90,251 gsf of commercial space and 43,392 gsf of cellar level parking, as well as the redevelopment of Block 318, Lot 1 (Projected Development Site 2) with a new 8-story, 248,095 gross square feet (gsf), mixed-use building containing 149,677 gsf of residential space (150 dwelling units), 35,988 gsf of commercial space, 10,000 gsf of community facility space, 27,109 gsf of manufacturing space and 25,321 gsf of cellar level parking, The applicant-owned Projected Development Sites 1 and 2 are currently developed with five occupied buildings, while the remainder of the project area not controlled by the applicant, Potential Development Site 1 (Block 318, Lots 9 and 11), is currently developed with two occupied buildings. It should also be noted that in the With-Action Condition, it is proposed that Potential Development Site 1 would be redeveloped with a new 8-story, 45,741 gsf, mixed-use building containing 33,262 gsf of residential space (33 dwelling units), 7,490 gsf of commercial space and 4,989 gsf of parking space.

Projected Development Site 1: Block 318, Lots 15 and 22 & Projected Development Site 2: Block 318, Lot 1

The November 2019 Phase I report revealed that historical on-site and surrounding area land uses consists of residential and industrial uses including Michel NY Shipping and Receiving, Lady Linda Cake Company, several bakeries, Control Cargo Solutions, Central Construction Management, Curb taxi company, Curb Mobility LLC., Automated Bread Distributing, several auto repair shops, Harry's Roofing & Painting, Broadway Covers Upholstery, Superior Selected Stone, Marble and Granite Works, Leffer Brothers Steel, an iron works facility, a woodworking facility, Sheridan & Milko Marble Finishing, as well as several residential buildings. Regulatory databases such as the New York State Department of Environmental Conservation SPILLS, Leaking Underground Storage Tank, Leaking Storage Tanks (LTANKS), Resource Conservation and Recovery Act Generators, and Petroleum Bulk Storage (PBS) Underground Storage Tanks (USTs) and PBS Aboveground Storage Tanks (ASTs) identified several sites in close proximity to the project site. The SPILLS database reported 21 SPILLS within a 1/8-mile radius of the project site and the LTANKS database reported 42 LTANKS within a 1/2-mile radius of the project site. The PBS USTs and the PBS ASTs databases reported 27 USTs and 19 ASTs within a 1/4-mile radius of the project site. The Phase I also reported one Historical Cleaner and one Historical Auto Station within a 1/8-mile radius of the project site. Based on the age of the buildings that currently occupies the project site, asbestos containing materials and lead based paint could be present in the structures.

Based upon our review of the submitted documentation, we have the following comments and recommendations to DCP:

Projected Development Site 1: Block 318, Lots 15 and 22 & Projected Development Site 2: Block 318, Lot 1 (Sites under the control or ownership of the applicant)

- Based on prior on-site and/or surrounding area land uses which could result in environmental contamination and testing is not physically possible during the CEQR process, DEP concurs with the EAS recommendation that an (E) Designation for hazardous materials should be placed on the zoning map pursuant to Section 11-15 of the New York City Zoning Resolution for the subject properties. The (E) Designation will ensure that testing and mitigation will be provided as necessary before any future development and/or soil disturbance. The applicant should be directed to coordinate further hazardous materials assessments through the Mayor's Office of Environmental Remediation (OER).

Potential Development Site 1: Block 318, Lots 9 and 11 (Site not under the control or ownership of the applicant)

- Based on prior on-site and/or surrounding area land uses which could result in environmental contamination, DEP recommends that an (E) Designation for hazardous materials should be placed on the zoning map pursuant to Section 11-15 of the New York City Zoning Resolution for the subject property. The (E) Designation will ensure that testing and mitigation will be provided as necessary before any future development and/or soil disturbance. The applicant should be directed to coordinate further hazardous materials assessments through OER.

- DCP should instruct the applicant that the EAS should be revised to discuss Potential Development Site 1 and the placement of the (E) Designation.

Future correspondence and submittals related to this project should include the following CEQR # **77DCP735Q**. If you have any questions, you may contact Ms. Cassandra Scantlebury at (718) 595-6756.

Sincerely,

Wei Yu
Deputy Director, Hazardous Materials

cc: R. Weissbard
T. Estesen
C. Scantlebury
M. Wimbish
R. Lucas
O. Abinader – DCP
M. Bertini – OER

APPENDIX B

ARCHITECTURAL PLANS

ZONING ANALYSIS

33-33 11TH STREET & 11-11 34TH AVENUE

LONG ISLAND CITY, NY

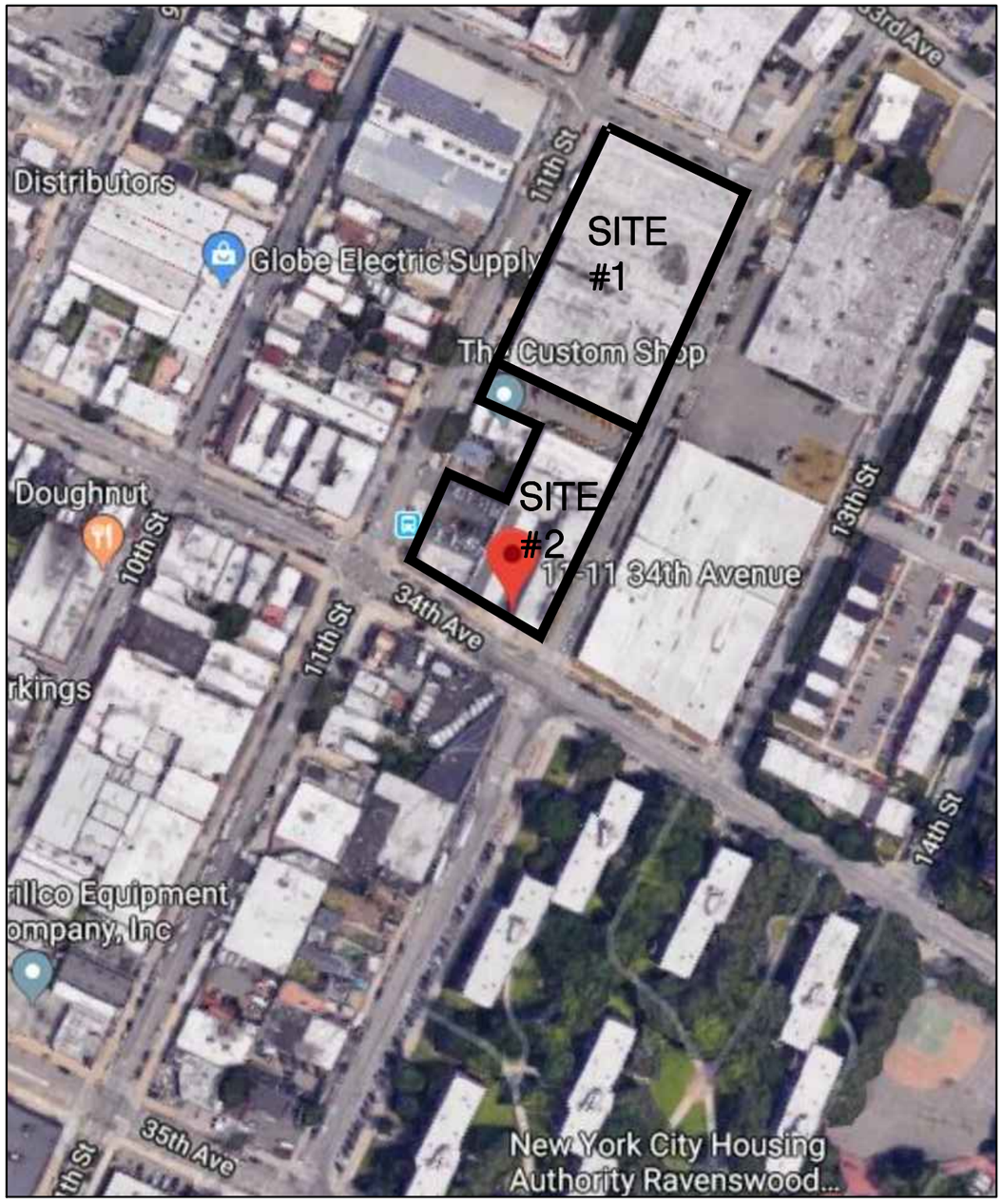

AERIAL PHOTO

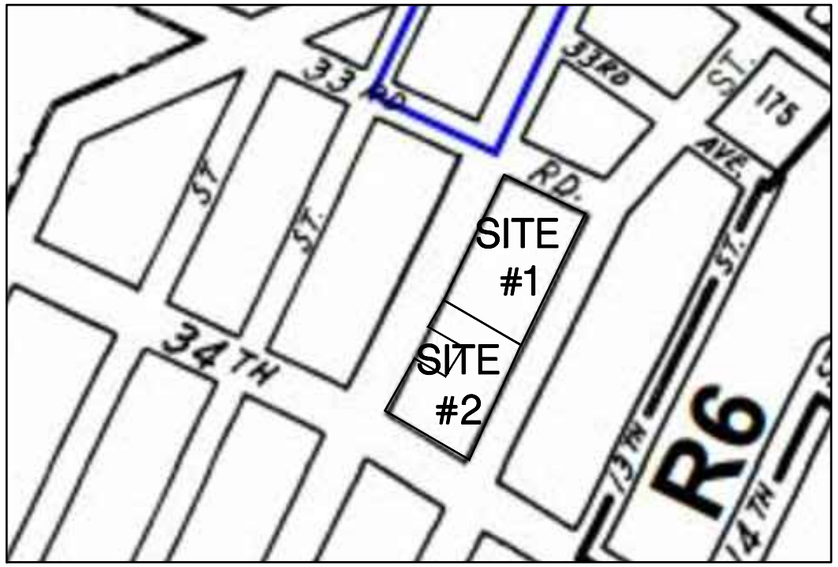

ZONING MAP No. 9a

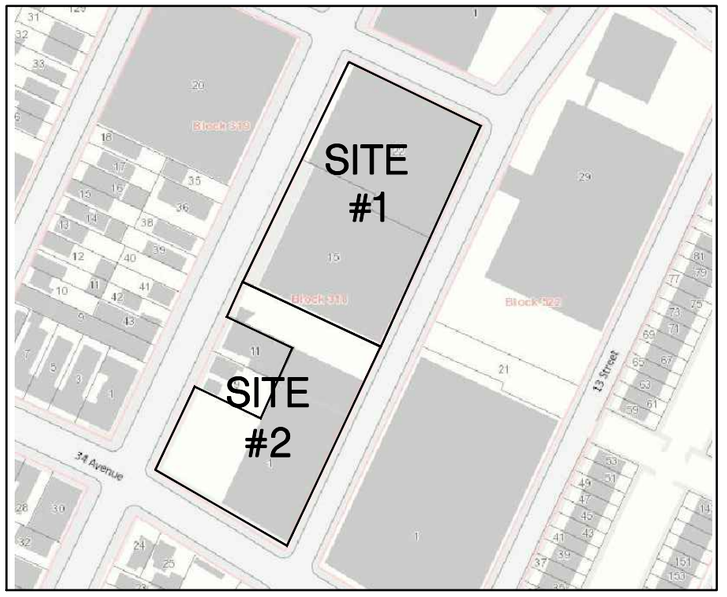

AREA MAP

THE ARCHITECT SHALL NOT HAVE CONTROL OR CHARGE OF AND SHALL NOT BE RESPONSIBLE FOR CONSTRUCTION MEANS, METHODS, DEVIATIONS, TECHNIQUES, SEQUENCES OR PROCEDURES, OR FOR SAFETY PRECAUTIONS AND PROGRAMS IN CONNECTIONS WITH THE WORK, FOR THE ACTS OR OMISSIONS OF THE CONTRACTOR, SUBCONTRACTORS OR ANY OTHER PERSONS PERFORMING ANY OF THE WORK, OR FOR THE FAILURE OF THEM TO CARRY OUT THE WORK IN ACCORDANCE WITH THE CONTRACT DOCUMENTS. ALWAYS USE DIMENSIONS AS SHOWN. DRAWINGS ARE NOT TO BE SCALED. GERALD J. CALIENDO ARCHITECT, P.C. AND ITS PRINCIPAL/EMPLOYEES WERE NOT RETAINED FOR ANY CONSTRUCTION SUPERVISION.

Gerald J. Caliendo, R.A., A.I.A.
Architect, P.C.
Architecture
Interior Design
Code Consultant
Building Dept. Expediting
138-72 Queens Boulevard
Briarwood N.Y. 11435
Tel. (718) 268-9098
Fax (718) 268-9097
www.caliendoarchitects.com

DRAWING TITLE: ZONING ANALYSIS - M1-5 / R6A FOR ILLUSTRATIVE PURPOSES ONLY

PREMISES: 33-33 11th STREET & 11-11 34th AVENUE LONG ISLAND CITY, NY

DRAWN BY:	N.M.M.
CHECKED BY:	GJC
JOB No:	17198 & 19110
SCALE:	AS NOTED
DATE:	4-24-20

REGISTERED ARCHITECT GERALD J. CALIENDO 020241 STATE OF NEW YORK

DRAWING No: 1 OF 22

Z-001.00

SITE #1

Zoning Analysis

Site Data		List of Required Actions
Block(s)	318	1. Zoning Map Amendment
Lot(s)	15 & 22	
Street Address(es)	33-33 11th Street	
Existing Zoning: R5	M1-5 / R6A	
Community District	401	
Zoning Section Map No.	9a	
Zoning Lot Area	57,138 sf	

Item	Zoning Section	Permitted/Required in M1-5	Permitted/Required in R6A	Proposed	Compliance/Notes
Uses Permitted	22-00 & 42-00	3, 4 -14, 16 & 17	1-4	2 & 9	yes
Max. F.A.R.					
Commercial / Manufacturing	123.64 & 43-12	5.00	N.A.	1.57	yes
Residential (QH)	123-64 & 23-154	N.A.	3.60	3.41	yes
Total F.A.R.		5.00		4.98	yes
Max. Floor Area					
Commercial / Manufacturing	123.64 & 43-12	285,690 sf		89,458.72 sf	yes
Residential	123-64 & 23-154	N.A.	206,344.8 sf	*194,872.91 sf	yes
Total Floor Area		285,690 sf		*284,331.63 sf	yes
Max. Lot Coverage					
Percentage	123-64 (b)	N.A.		86% corner 65% through lot	yes
Square feet				15,855.2 sf - corner 24,984.47 sf - through lot	
Yards					
Front	123-652	None		0	yes
Side	123-652 & 43-25	0 or 8'-0" min.		0	yes
Rear	43-28	(2) 20'-0" yards at center or	(2) 30'-0" yards at center or w/in	(2) 30'-0" - Res.	yes
Density					
Max. No. of D.U's	23-22	N.A.		204	N.A.
Max. Height & Setback					
Min. Base Height	123-662 & 23-664 *as per Text Amendment to increase height only as if in an R7A.	*40'-0"		55'-0"	yes
Max. Base Height		*75'-0"		75'-0"	
Max. Building Height		*95'-0" or 9 Stories		95'-0" or 8 stories	yes
Setback Narrow Street		15'-0"		15'-0"	yes
Setback Wide Street		10'-0"		10'-0"	yes
Req'd. Parking					
General Retail uses	123-71 & 36-21	None required		0	yes
Ambulatory Diagnostic Ctr.	123-71 & 25-31	None required		0	
Residential - MIH	25-251 & 25-23	N.A.	61 D.U's -None in Transit Zone	100	yes
Residential - Market Rate		50%	50% x 143 = 72 spaces		
Req'd. Bicycle Parking					
General Retail Uses	44-60 & 36-70	1 per 10,000 sf = 89,458.72 sf / 10,000 = 9 bikes		9	yes
Ambulatory Diagnostic Ctr.					
Residential	25-40	N.A.	1 per 2 D.U's = 102 bikes	102	yes
Req'd. Loading					
Retail or Service uses	123-71 & 44-52	Offices < 100,000 sf = 0 Trade School , Retail & Motion/Television Studio = 2	N.A.	2	yes

ZFA already reduced by Res. Q.H. deductions

GROSS FLOOR AREA BREAKDOWN	
SITE #1	
USE	GSF
TRADE SCHOOL (ACI TRAINING)	22,169.07
TRADE SCHOOL (FILM & TV)	10,405.83
ARTIST STUDIO	6,552.40
RETAIL	11,954.70
ACC. OFFICES	39,168.72
PARKING	43,392.39
RESIDENTIAL	204,831.30

SITE #2

Zoning Analysis

Site Data		List of Required Actions
Block(s)	318	1. Zoning Map Amendment
Lot(s)	1	
Street Address(es)	11-11 34th Avenue	
Existing Zoning: R5	M1-5 / R6A	
Community District	401	
Zoning Section Map No.	9a	
Zoning Lot Area	41,527.29 sf	

Item	Zoning Section	Permitted/Required in M1-5	Permitted/Required in R6A	Proposed	Compliance/Notes
Uses Permitted	22-00 & 42-00	3, 4 -14, 16 & 17	1 - 4	2, 4, 6 & 16	yes
Max. F.A.R.					
Commercial / Manufacturing	123.64 & 43-12	5.00	N.A.	1.42	yes
Community Facility	123-64 & 24-11	3.00	N.A.	0.24	
Residential (QH)	123-64 & 23-154	N.A.	3.60	3.33	yes
Total F.A.R.		5.00		4.99	yes
Max. Floor Area					
Commercial / Manufacturing	123.64 & 43-12	207,636.45 sf		58,882.7 sf	yes
Community Facility	123-64 & 24-11	124,581.87 sf		10,000 sf	
Residential	123-64 & 23-154	N.A.	149,498.24 sf	*138,318.39 sf	yes
Total Floor Area		207,636.45 sf		*207,201.09 sf	yes
Max. Lot Coverage					
Percentage	123-64 (b)	N.A.		87% corner 53% through lot	yes
Square feet				16,246.25 sf - corner 12,275.16 sf - through lot	
Yards					
Front	123-652	None		0	yes
Side	123-652 & 43-25	0 or 8'-0" min.		23'-0"	yes
Rear	43-28	(2) 20'-0" yards at center or w/in 5' of center - Through lot portion	(2) 30'-0" yards at center or w/in 5' of center - Through lot portion	20'-0" & 32'-8"	yes
Density					
Max. No. of D.U's	23-22	N.A.		148	N.A.
Max. Height & Setback					
Min. Base Height	123-662 & 23-664 *Text Amendment to increase height only as if in R7A	*40'-0"		55'-0"	yes
Max. Base Height		*75'-0"		75'-0"	
Max. Building Height		*95'-0" or 9 Stories		95'-0" or 8 stories	yes
Setback Narrow Street		15'-0"		15'-0"	yes
Setback Wide Street		10'-0"		10'-0"	yes
Req'd. Parking					
General Retail uses	123-71 & 36-21	None required		0	yes
Ambulatory Diagnostic Ctr.	123-71 & 25-31	None required		0	
Residential - MIH	25-251 & 25-23	N.A.	44 D.U's -None in Transit Zone	60 spaces	yes
Residential - Market Rate		50%	50% x 104 = 52 spaces		
Req'd. Bicycle Parking					
General Retail Uses	44-60 & 36-70	1 per 10,000 sf = 68,882.7 / 10,000 = 7 bikes		7	yes
Ambulatory Diagnostic Ctr.					
Residential	25-40	N.A.	1 per 2 D.U's = 74 bikes	74	yes
Req'd. Loading					
Retail or Service uses	123-71 & 44-52	Offices < 100,000 sf = 0 Retail < 25,000 sf = 0 Food Distribution > 15,000 sf = 1	N.A.	4	yes

*ZFA already reduced by Res. Q.H. deductions

GROSS FLOOR AREA BREAKDOWN	
SITE #2	
USE	GSF
FOOD DISTRIBUTION	27,109.38
RETAIL (includes storage in cellar)	12,086
COMMUNITY FACILITY	10,000
OFFICES (includes 1st fl. Lobby)	23,901.76
RESIDENTIAL	149,676.66 SF
PARKING	25,321

THE ARCHITECT SHALL NOT HAVE CONTROL OR CHARGE OF AND SHALL NOT BE RESPONSIBLE FOR CONSTRUCTION MEANS, METHODS, TECHNIQUES, SEQUENCES OR PROCEDURES, OR FOR SAFETY PRECAUTIONS AND PROGRAMS IN CONNECTIONS WITH THE WORK, FOR THE ACTS OR OMISSIONS OF THE CONTRACTOR, SUBCONTRACTORS OR ANY OTHER PERSONS PERFORMING ANY OF THE WORK, OR FOR THE FAILURE OF THEM TO CARRY OUT THE WORK IN ACCORDANCE WITH THE CONTRACT DOCUMENTS. ALWAYS USE DIMENSIONS AS SHOWN. DRAWINGS ARE NOT TO BE SCALED. GERALD J. CALIENDO ARCHITECT, P.C. AND ITS PRINCIPAL/EMPLOYEES WERE NOT RETAINED FOR ANY CONSTRUCTION SUPERVISION.

Gerald J. Caliendo, R.A., A.I.A.
Architect, P.C.
Architecture
Interior Design
Code Consultant
Building Dept. Expediting
138-72 Queens Boulevard
Briarwood N.Y. 11435
Tel. (718) 268-9098
Fax (718) 268-9097
www.caliendoarchitects.com

DRAWING TITLE: ZONING ANALYSIS - M1-5 / R6A
FOR ILLUSTRATIVE PURPOSES ONLY

PREMISES: 33-33 11th STREET & 11-11 34th AVENUE
LONG ISLAND CITY, NY

DRAWN BY:	CHECKED BY:	JOB No:	SCALE:	DATE:
N.M.M.	GJC	17198 & 19110	AS NOTED	4-24-20

REG'D ARCHITECT GERALD J. CALIENDO 020241 STATE OF NEW YORK

DRAWING No: 2 OF 22

Z-002.00

SITE #2

SITE #1

11th STREET.
80' WIDE

222'-11"

31'-6" NEW C.C.

23'-0" NEW C.C.

80'-0"

40'-5"

19-9½"

R5

R5 M1-5 / R6A

110.37

310.27

6 STY

50.00

100'-0" CORNER LOT PORTION

33.85

65'-0"

50.00

85.10

NOT PART OF THE SUBJECT LOTS

1 STY ROOF

4 STY ROOF

6 STY ROOF

No. 33-33 PROPOSED 8 STY MIX-USE BLDG. (COMMERCIAL & RESIDENTIAL)

2 STY

1 STY. - HIGHER ROOF (MAX. 23'H.)

1 STY. OPEN COURT

BLOCK: 318

34th AVENUE
80' WIDE

No. 11-11 PROP. 8 STY MIXED USED BUILDING

2 STY ROOF

1 STY ROOF

100.08

150.49

184.76

245'-1½"

60'-0"

40'-0"

98.71

59.42

49.25

51.62

56.00

63.00

65.00

59.56

51.60

68.45

68.42

53.17

40.56

35.01

92.93

185.86

92.28

184.56

60.00

14.66

33rd ROAD
50' WIDE

12th STREET.
50' WIDE

240'-3"

180.92

210.19

153'-10½"

113'-10½"

33'-0" NEW C.C.

20'-0" NEW C.C.

20'-0" NEW C.C.

29'-10"

50'-0"

10'-1"

10'-2½"

R5 M1-5 / R6A

R5 M1-5 / R6A

SITE PLAN
SCALE: 1" = 60'-0"

NOTE: CURB CUTS WIDER THAN 30'-0" REQUIRE WAIVER FROM DOT AND APPROVAL BY DOB COMMISSIONER.

THE ARCHITECT SHALL NOT HAVE CONTROL OR CHARGE OF AND SHALL NOT BE RESPONSIBLE FOR CONSTRUCTION MEANS, METHODS, DEVIATIONS, TECHNIQUES, SEQUENCES OR PROCEDURES, OR FOR SAFETY PRECAUTIONS AND PROGRAMS IN CONNECTIONS WITH THE WORK, FOR THE ACTS OR OMISSIONS OF THE CONTRACTOR, SUBCONTRACTORS OR ANY OTHER PERSONS PERFORMING ANY OF THE WORK, OR FOR THE FAILURE OF THEM TO CARRY OUT THE WORK IN ACCORDANCE WITH THE CONTRACT DOCUMENTS. ALWAYS USE DIMENSIONS AS SHOWN. DRAWINGS ARE NOT TO BE SCALED. GERALD J. CALIENDO ARCHITECT, P.C. AND ITS PRINCIPAL/EMPLOYEES WERE NOT RETAINED FOR ANY CONSTRUCTION SUPERVISION.

Gerald J. Caliendo, R.A., A.I.A.
Architect, P.C.

Architecture
Interior Design
Code Consultant
Building Dept. Expediting

138-72 Queens Boulevard
Briarwood N.Y. 11435

Tel. (718) 268-9098
Fax (718) 268-9097

www.caliendoarchitects.com

DRAWING TITLE: SITE PLAN - M1-5 / R6A
FOR ILLUSTRATIVE PURPOSES ONLY

PREMISES: 33-33 11th STREET & 11-11 34th AVENUE
LONG ISLAND CITY, NY

DRAWN BY:	N.M.M.	JOB No:	17198 & 19110
CHECKED BY:	GJC	SCALE:	AS NOTED
		DATE:	REV. 12-15-21

SEAL:
REGISTERED ARCHITECT
GERALD J. CALIENDO
020241
STATE OF NEW YORK

DRAWING No: 3 OF 22

Z-003.00

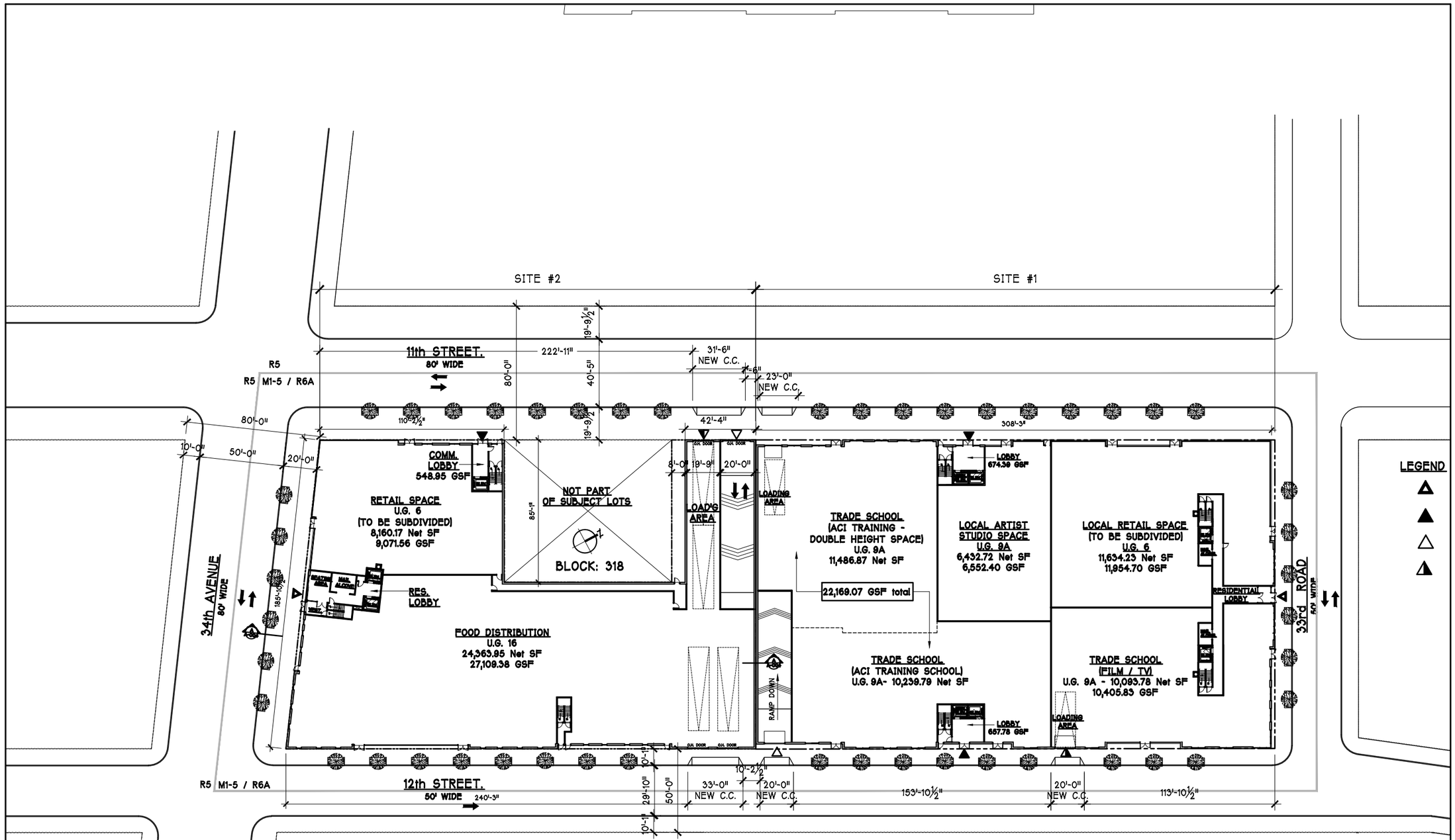

FIRST FLOOR PLAN
SCALE: 1" = 60'-0"

NOTE: CURB CUTS WIDER THAN 30'-0" REQUIRE WAIVER FROM DOT AND APPROVAL BY DOB COMMISSIONER.

LEGEND

THE ARCHITECT SHALL NOT HAVE CONTROL OR CHARGE OF AND SHALL NOT BE RESPONSIBLE FOR CONSTRUCTION MEANS, METHODS, DEVIATIONS, TECHNIQUES, SEQUENCES OR PROCEDURES, OR FOR SAFETY PRECAUTIONS AND PROGRAMS IN CONNECTIONS WITH THE WORK, FOR THE ACTS OR OMISSIONS OF THE CONTRACTOR, SUBCONTRACTORS OR ANY OTHER PERSONS PERFORMING ANY OF THE WORK, OR FOR THE FAILURE OF THEM TO CARRY OUT THE WORK IN ACCORDANCE WITH THE CONTRACT DOCUMENTS. ALWAYS USE DIMENSIONS AS SHOWN. DRAWINGS ARE NOT TO BE SCALED. GERALD J. CALIENDO ARCHITECT, P.C. AND ITS PRINCIPAL/EMPLOYEES WERE NOT RETAINED FOR ANY CONSTRUCTION SUPERVISION.

Gerald J. Caliendo, R.A., A.I.A.
Architect, P.C.

Architecture
Interior Design
Code Consultant
Building Dept. Expediting

138-72 Queens Boulevard
Briarwood N.Y. 11435

Tel. (718) 268-9098
Fax (718) 268-9097

www.caliendoarchitects.com

DRAWING TITLE: FIRST FLOOR PLAN
FOR ILLUSTRATIVE PURPOSES ONLY

PREMISES: 33-33 11th STREET & 11-11 34th AVENUE
LONG ISLAND CITY, NY

DRAWN BY:	CHECKED BY:	JOB No:	SCALE:	DATE:
N.M.M.	GJC	17198 & 19110	AS NOTED	REV 12-15-21

REGISTERED ARCHITECT
GERALD J. CALIENDO
020241
STATE OF NEW YORK

DRAWING No: 4 OF 22

Z-004.00

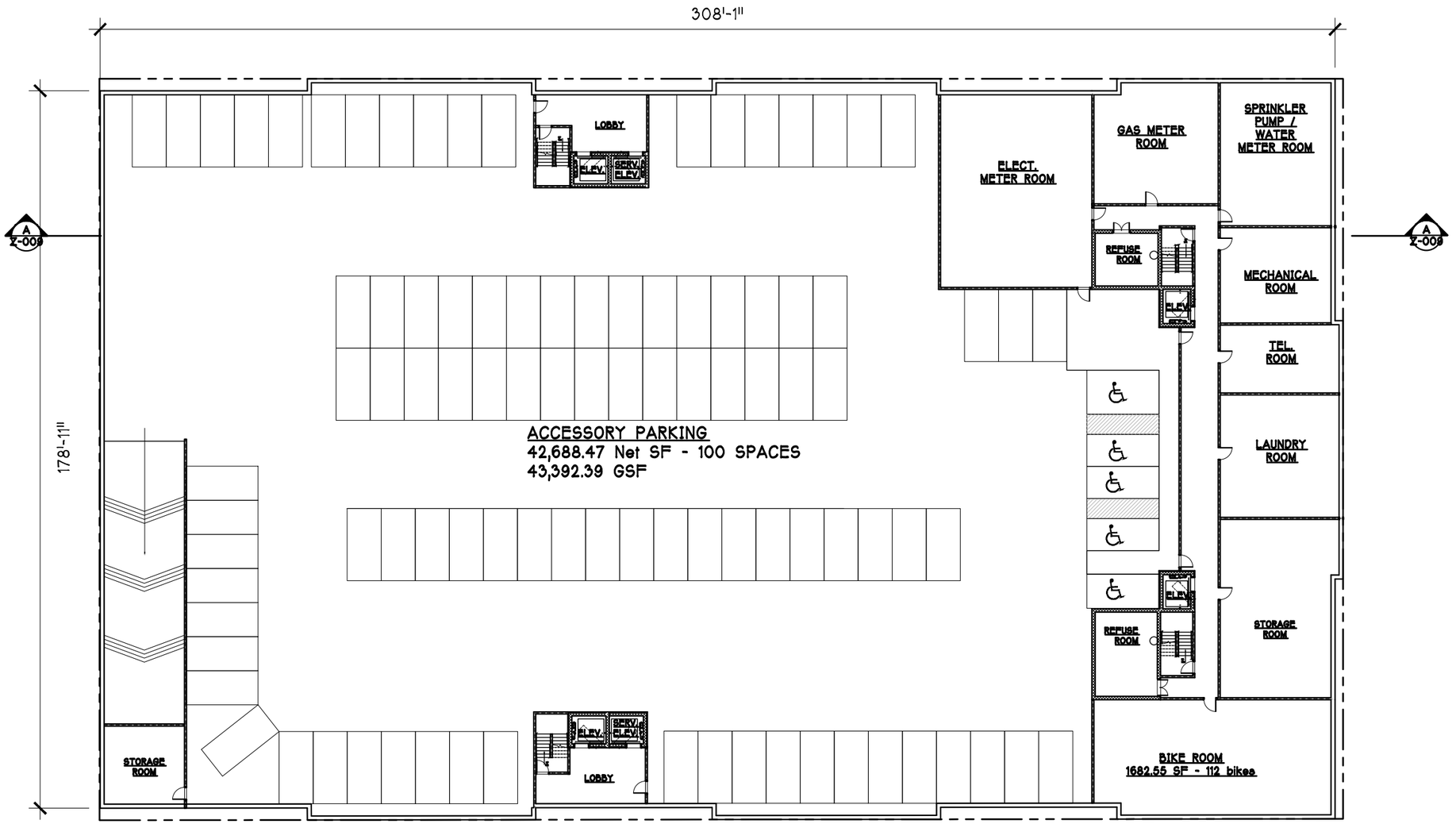

CELLAR FLOOR PLAN

SCALE: 1" = 30'-0"

THE ARCHITECT SHALL NOT HAVE CONTROL OR CHARGE OF AND SHALL NOT BE RESPONSIBLE FOR CONSTRUCTION MEANS, METHODS, DEVIATIONS, TECHNIQUES, SEQUENCES OR PROCEDURES, OR FOR SAFETY PRECAUTIONS AND PROGRAMS IN CONNECTIONS WITH THE WORK, FOR THE ACTS OR OMISSIONS OF THE CONTRACTOR, SUBCONTRACTORS OR ANY OTHER PERSONS PERFORMING ANY OF THE WORK, OR FOR THE FAILURE OF THEM TO CARRY OUT THE WORK IN ACCORDANCE WITH THE CONTRACT DOCUMENTS. ALWAYS USE DIMENSIONS AS SHOWN. DRAWINGS ARE NOT TO BE SCALED. GERALD J. CALIENDO ARCHITECT, P.C. AND ITS PRINCIPAL/EMPLOYEES WERE NOT RETAINED FOR ANY CONSTRUCTION SUPERVISION.

Gerald J. Caliendo, R.A., A.I.A.
Architect, P.C.

Architecture
Interior Design
Code Consultant
Building Dept. Expediting

138-72 Queens Boulevard
Briarwood N.Y. 11435

Tel. (718) 268-9098
Fax (718) 268-9097

www.caliendoarchitects.com

DRAWING TITLE: CELLAR FLOOR PLAN - SITE #1
FOR ILLUSTRATIVE PURPOSES ONLY

PREMISES: 33-33 11th STREET
LONG ISLAND CITY, NY

DRAWN BY:	N.M.M.	JOB No:	17198 & 19110
CHECKED BY:	GJC	SCALE:	AS NOTED
		DATE:	4-24-20

REGISTERED ARCHITECT
GERALD J. CALIENDO
020241
STATE OF NEW YORK
SEAL

DRAWING No: 5 OF 22

Z-005.00

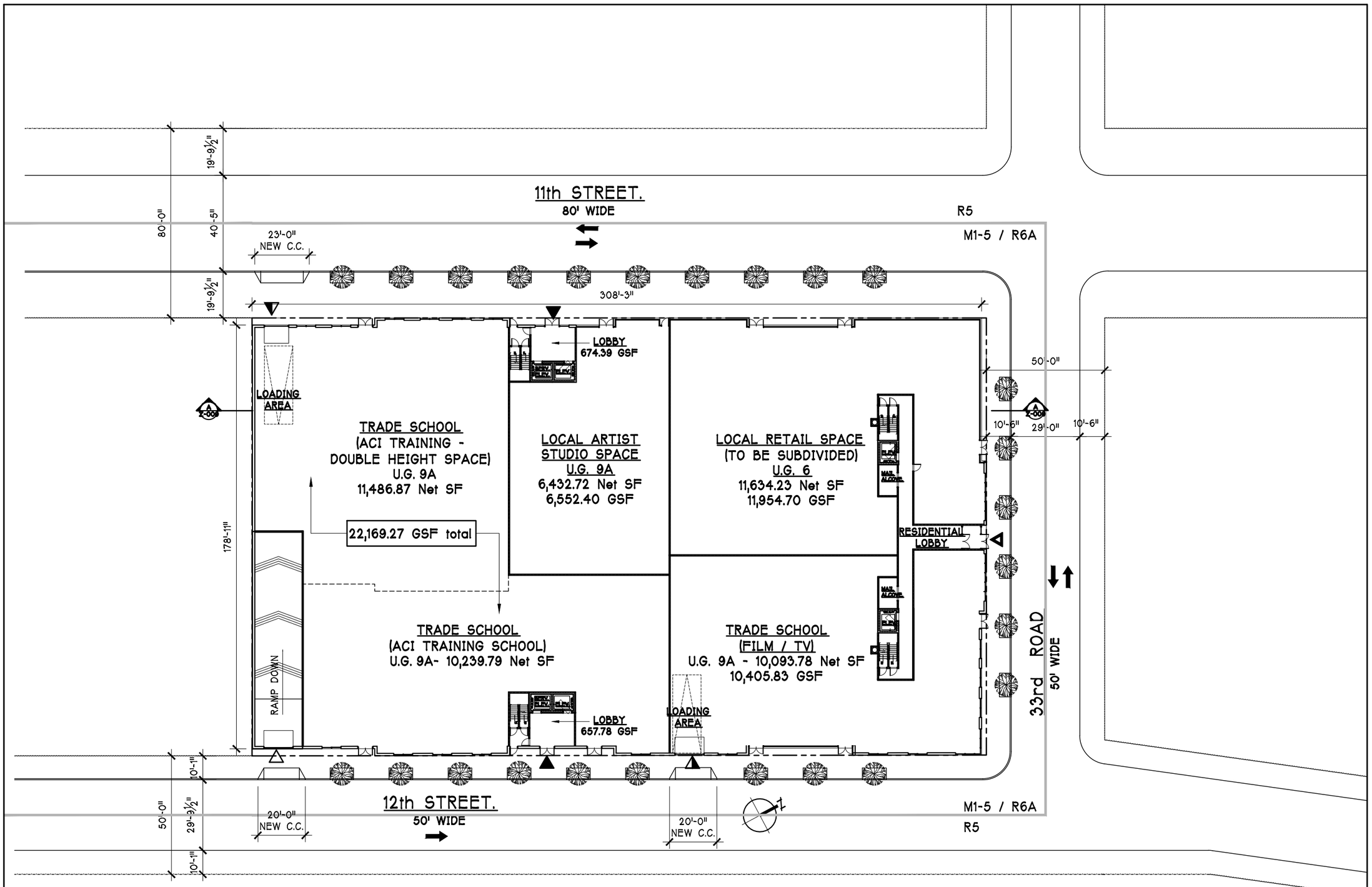

FIRST FLOOR PLAN

SCALE: 1" = 40'-0"

THE ARCHITECT SHALL NOT HAVE CONTROL OR CHARGE OF AND SHALL NOT BE RESPONSIBLE FOR CONSTRUCTION MEANS, METHODS, DEVIATIONS, TECHNIQUES, SEQUENCES OR PROCEDURES, OR FOR SAFETY PRECAUTIONS AND PROGRAMS IN CONNECTIONS WITH THE WORK, FOR THE ACTS OR OMISSIONS OF THE CONTRACTOR, SUBCONTRACTORS OR ANY OTHER PERSONS PERFORMING ANY OF THE WORK, OR FOR THE FAILURE OF THEM TO CARRY OUT THE WORK IN ACCORDANCE WITH THE CONTRACT DOCUMENTS. ALWAYS USE DIMENSIONS AS SHOWN. DRAWINGS ARE NOT TO BE SCALED. GERALD J. CALIENDO ARCHITECT, P.C. AND ITS PRINCIPAL/EMPLOYEES WERE NOT RETAINED FOR ANY CONSTRUCTION SUPERVISION.

Gerald J. Caliendo, R.A., A.I.A.
Architect, P.C.

Architecture
Interior Design
Code Consultant
Building Dept. Expediting

138-72 Queens Boulevard
Briarwood N.Y. 11435

Tel. (718) 268-9098
Fax (718) 268-9097

www.caliendoarchitects.com

DRAWING TITLE: FIRST FLOOR PLAN - SITE #1
FOR ILLUSTRATIVE PURPOSES ONLY

PREMISES: 33-33 11th STREET
LONG ISLAND CITY, NY

DRAWN BY:	N.M.M.
CHECKED BY:	GJC
JOB No:	17198 & 19110
SCALE:	AS NOTED
DATE:	4-24-20

SEAL:

REGISTERED ARCHITECT
GERALD J. CALIENDO
020241
STATE OF NEW YORK

DRAWING No: 6 OF 22

Z-006.00

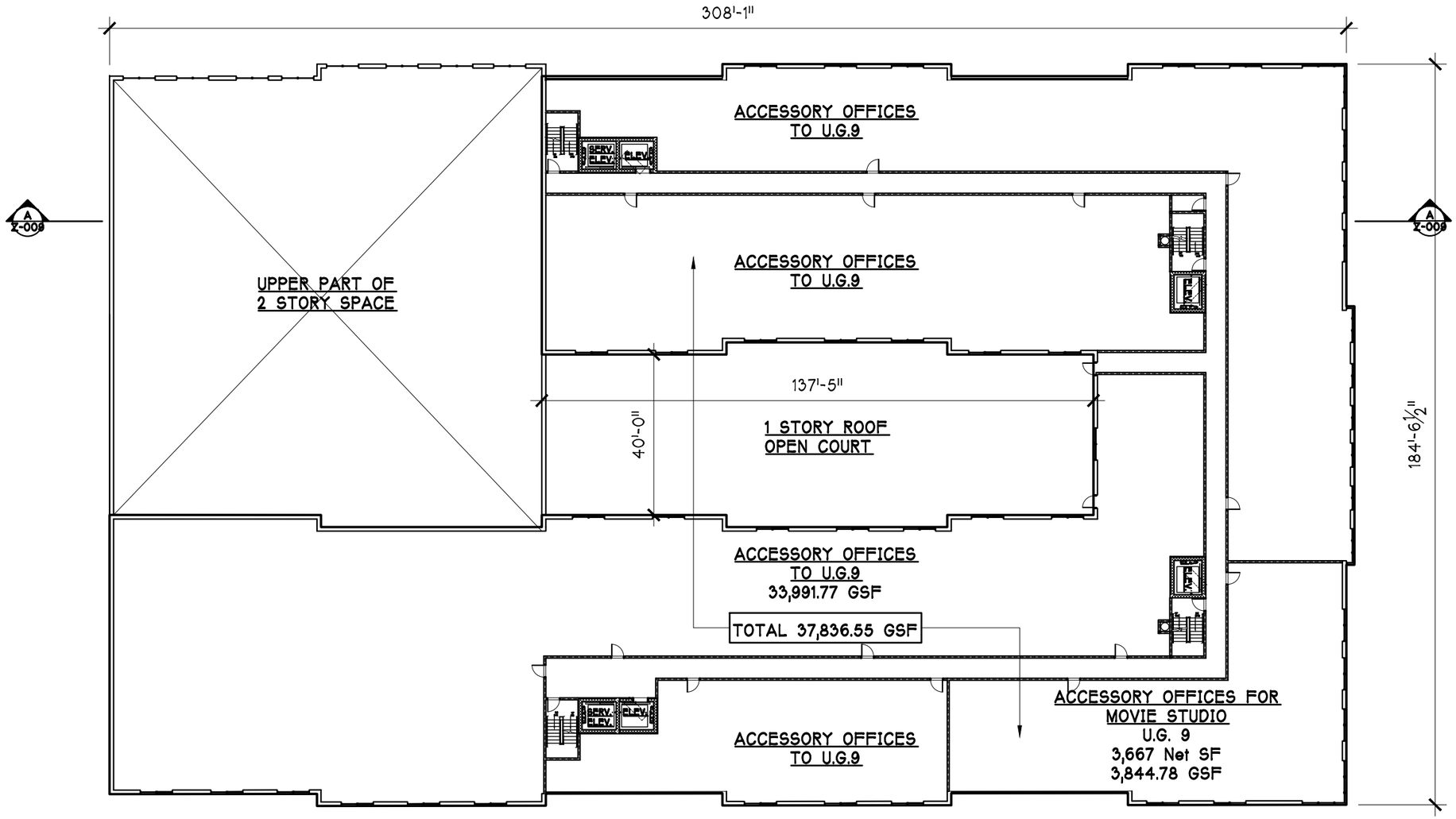

SECOND FLOOR PLAN

SCALE: 1" = 30'-0"

THE ARCHITECT SHALL NOT HAVE CONTROL OR CHARGE OF AND SHALL NOT BE RESPONSIBLE FOR CONSTRUCTION MEANS, METHODS, DEVIATIONS, TECHNIQUES, SEQUENCES OR PROCEDURES, OR FOR SAFETY PRECAUTIONS AND PROGRAMS IN CONNECTIONS WITH THE WORK, FOR THE ACTS OR OMISSIONS OF THE CONTRACTOR, SUBCONTRACTORS OR ANY OTHER PERSONS PERFORMING ANY OF THE WORK, OR FOR THE FAILURE OF THEM TO CARRY OUT THE WORK IN ACCORDANCE WITH THE CONTRACT DOCUMENTS. ALWAYS USE DIMENSIONS AS SHOWN. DRAWINGS ARE NOT TO BE SCALED. GERALD J. CALIENDO ARCHITECT, P.C. AND ITS PRINCIPAL/EMPLOYEES WERE NOT RETAINED FOR ANY CONSTRUCTION SUPERVISION.

Gerald J. Caliendo, R.A., A.I.A.
Architect, P.C.

Architecture
Interior Design
Code Consultant
Building Dept. Expediting

138-72 Queens Boulevard
Briarwood N.Y. 11435

Tel. (718) 268-9098
Fax (718) 268-9097

www.caliendoarchitects.com

DRAWING TITLE: SECOND FLOOR PLAN - SITE #1
FOR ILLUSTRATIVE PURPOSES ONLY

PREMISES: 33-33 11th STREET
LONG ISLAND CITY, NY

DRAWN BY:	N.M.M.	JOB No:	17198 & 19110
CHECKED BY:	GJC	SCALE:	AS NOTED
		DATE:	4-24-20

REGISTERED ARCHITECT
GERALD J. CALIENDO
020241
STATE OF NEW YORK

DRAWING No: 7 OF 22

Z-007.00

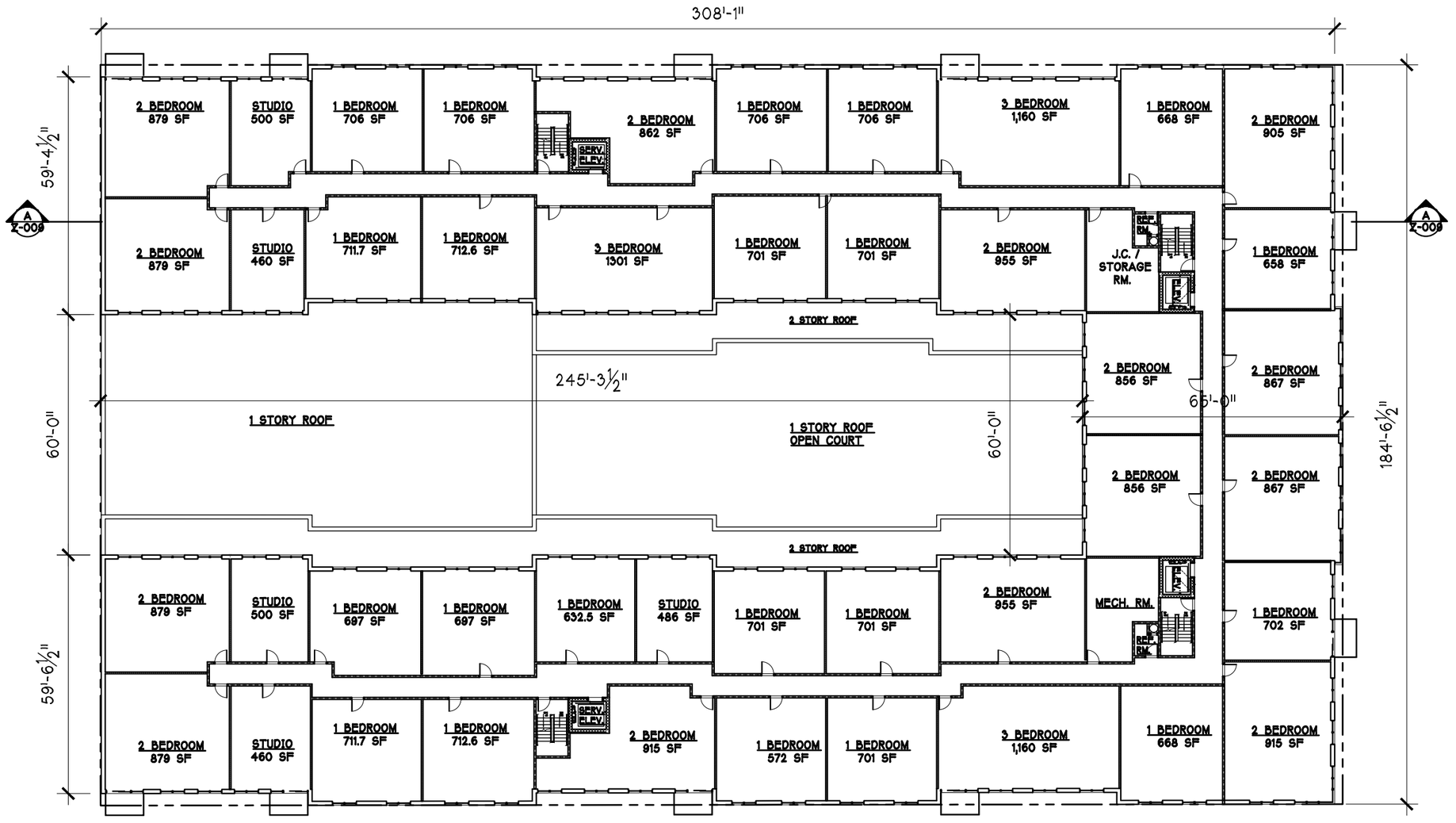

THIRD & FOURTH FLOOR PLAN

SCALE: 1" = 30'-0"

THE ARCHITECT SHALL NOT HAVE CONTROL OR CHARGE OF AND SHALL NOT BE RESPONSIBLE FOR CONSTRUCTION MEANS, METHODS, DEVIATIONS, TECHNIQUES, SEQUENCES OR PROCEDURES, OR FOR SAFETY PRECAUTIONS AND PROGRAMS IN CONNECTIONS WITH THE WORK; FOR THE ACTS OR OMISSIONS OF THE CONTRACTOR, SUBCONTRACTORS OR ANY OTHER PERSONS PERFORMING ANY OF THE WORK, OR FOR THE FAILURE OF THEM TO CARRY OUT THE WORK IN ACCORDANCE WITH THE CONTRACT DOCUMENTS. ALWAYS USE DIMENSIONS AS SHOWN. DRAWINGS ARE NOT TO BE SCALED. GERALD J. CALIENDO ARCHITECT, P.C. AND ITS PRINCIPAL/EMPLOYEES WERE NOT RETAINED FOR ANY CONSTRUCTION SUPERVISION.

Gerald J. Caliendo, R.A., A.I.A.
Architect, P.C.

Architecture
Interior Design
Code Consultant
Building Dept. Expediting

138-72 Queens Boulevard
Briarwood N.Y. 11435

Tel. (718) 268-9098
Fax (718) 268-9097

www.caliendoarchitects.com

DRAWING TITLE: THIRD & FOURTH FLOOR PLAN - SITE #1
FOR ILLUSTRATIVE PURPOSES ONLY

PREMISES: 33-33 11th STREET
LONG ISLAND CITY, NY

DRAWN BY:	N.M.M.	JOB No:	17198 & 19110
CHECKED BY:	GJC	SCALE:	AS NOTED
		DATE:	4-24-20

REGISTERED ARCHITECT
GERALD J. CALIENDO
020241
STATE OF NEW YORK

SEAL:

DRAWING No: 8 OF 22

Z-008.00

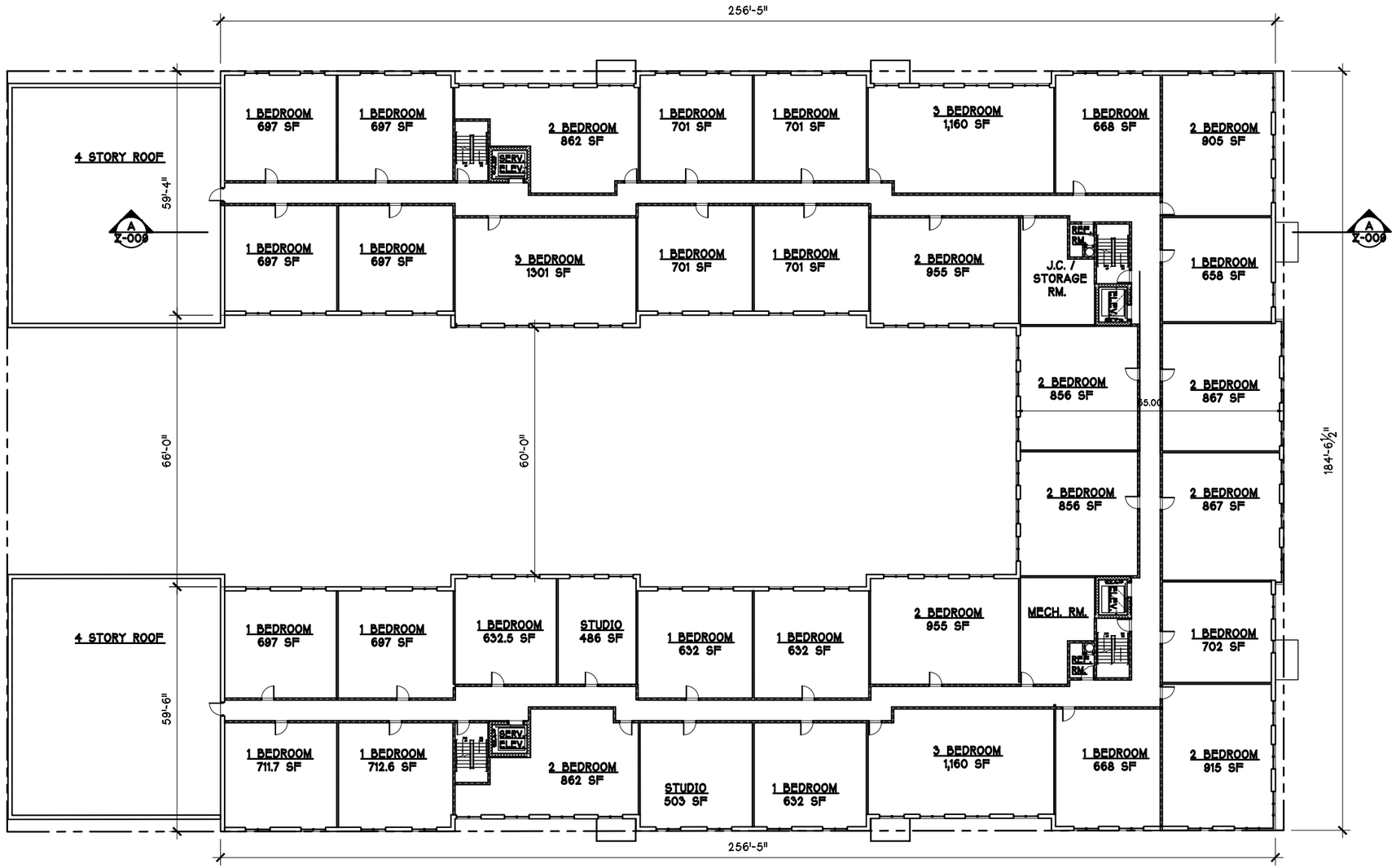

FIFTH & SIXTH FLOOR PLAN

SCALE: 1" = 30'-0"

THE ARCHITECT SHALL NOT HAVE CONTROL OR CHARGE OF AND SHALL NOT BE RESPONSIBLE FOR CONSTRUCTION MEANS, METHODS, DEVIATIONS, TECHNIQUES, SEQUENCES OR PROCEDURES, OR FOR SAFETY PRECAUTIONS AND PROGRAMS IN CONNECTIONS WITH THE WORK, FOR THE ACTS OR OMISSIONS OF THE CONTRACTOR, SUBCONTRACTORS OR ANY OTHER PERSONS PERFORMING ANY OF THE WORK, OR FOR THE FAILURE OF THEM TO CARRY OUT THE WORK IN ACCORDANCE WITH THE CONTRACT DOCUMENTS. ALWAYS USE DIMENSIONS AS SHOWN. DRAWINGS ARE NOT TO BE SCALED. GERALD J. CALIENDO ARCHITECT, P.C. AND ITS PRINCIPAL/EMPLOYEES WERE NOT RETAINED FOR ANY CONSTRUCTION SUPERVISION.

Gerald J. Caliendo, R.A., A.I.A.
Architect, P.C.

Architecture
Interior Design
Code Consultant
Building Dept. Expediting

138-72 Queens Boulevard
Briarwood N.Y. 11435

Tel. (718) 268-9098
Fax (718) 268-9097

www.caliendoarchitects.com

DRAWING TITLE: FIFTH & SIXTH FLOOR PLAN - SITE #1
FOR ILLUSTRATIVE PURPOSES ONLY

PREMISES: 33-33 11th STREET
LONG ISLAND CITY, NY

DRAWN BY:	N.M.M.
CHECKED BY:	GJC
JOB No:	17198 & 19110
SCALE:	AS NOTED
DATE:	4-24-20

REGISTERED ARCHITECT GERALD J. CALIENDO 020241 STATE OF NEW YORK

SEAL:

DRAWING No: 9 OF 22

Z-009.00

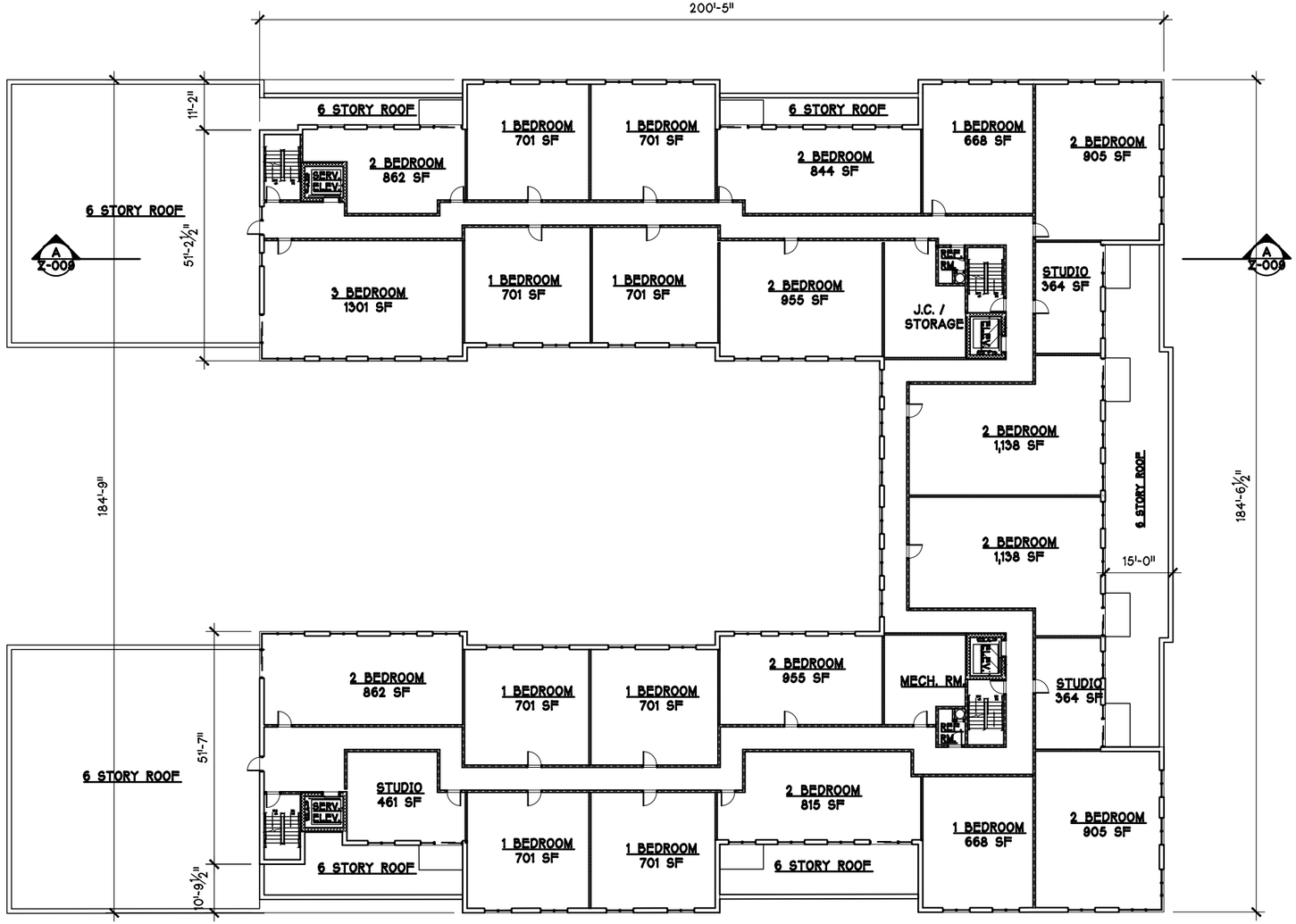

SEVENTH & EIGHTH FLOOR PLAN

SCALE: 1" = 30'-0"

THE ARCHITECT SHALL NOT HAVE CONTROL OR CHARGE OF AND SHALL NOT BE RESPONSIBLE FOR CONSTRUCTION MEANS, METHODS, DEVIATIONS, TECHNIQUES, SEQUENCES OR PROCEDURES, OR FOR SAFETY PRECAUTIONS AND PROGRAMS IN CONNECTIONS WITH THE WORK, FOR THE ACTS OR OMISSIONS OF THE CONTRACTOR, SUBCONTRACTORS OR ANY OTHER PERSONS PERFORMING ANY OF THE WORK, OR FOR THE FAILURE OF THEM TO CARRY OUT THE WORK IN ACCORDANCE WITH THE CONTRACT DOCUMENTS. ALWAYS USE DIMENSIONS AS SHOWN. DRAWINGS ARE NOT TO BE SCALED. GERALD J. CALIENDO ARCHITECT, P.C. AND ITS PRINCIPAL/EMPLOYEES WERE NOT RETAINED FOR ANY CONSTRUCTION SUPERVISION.

Gerald J. Caliendo, R.A., A.I.A.
Architect, P.C.
Architecture
Interior Design
Code Consultant
Building Dept. Expediting
138-72 Queens Boulevard
Briarwood N.Y. 11435
Tel. (718) 268-9098
Fax (718) 268-9097
www.caliendoarchitects.com

DRAWING TITLE: SEVENTH & EIGHTH FLOOR PLAN - SITE #1
FOR ILLUSTRATIVE PURPOSES ONLY

PREMISES: 33-33 11th STREET
LONG ISLAND CITY, NY

DRAWN BY:	CHECKED BY:	JOB No:	SCALE:	DATE:
N.M.M.	G.J.C	17198 & 19110	AS NOTED	4-24-20

REGISTERED ARCHITECT GERALD J. CALIENDO 020241 STATE OF NEW YORK

DRAWING No: 10 OF 20

Z-010.00

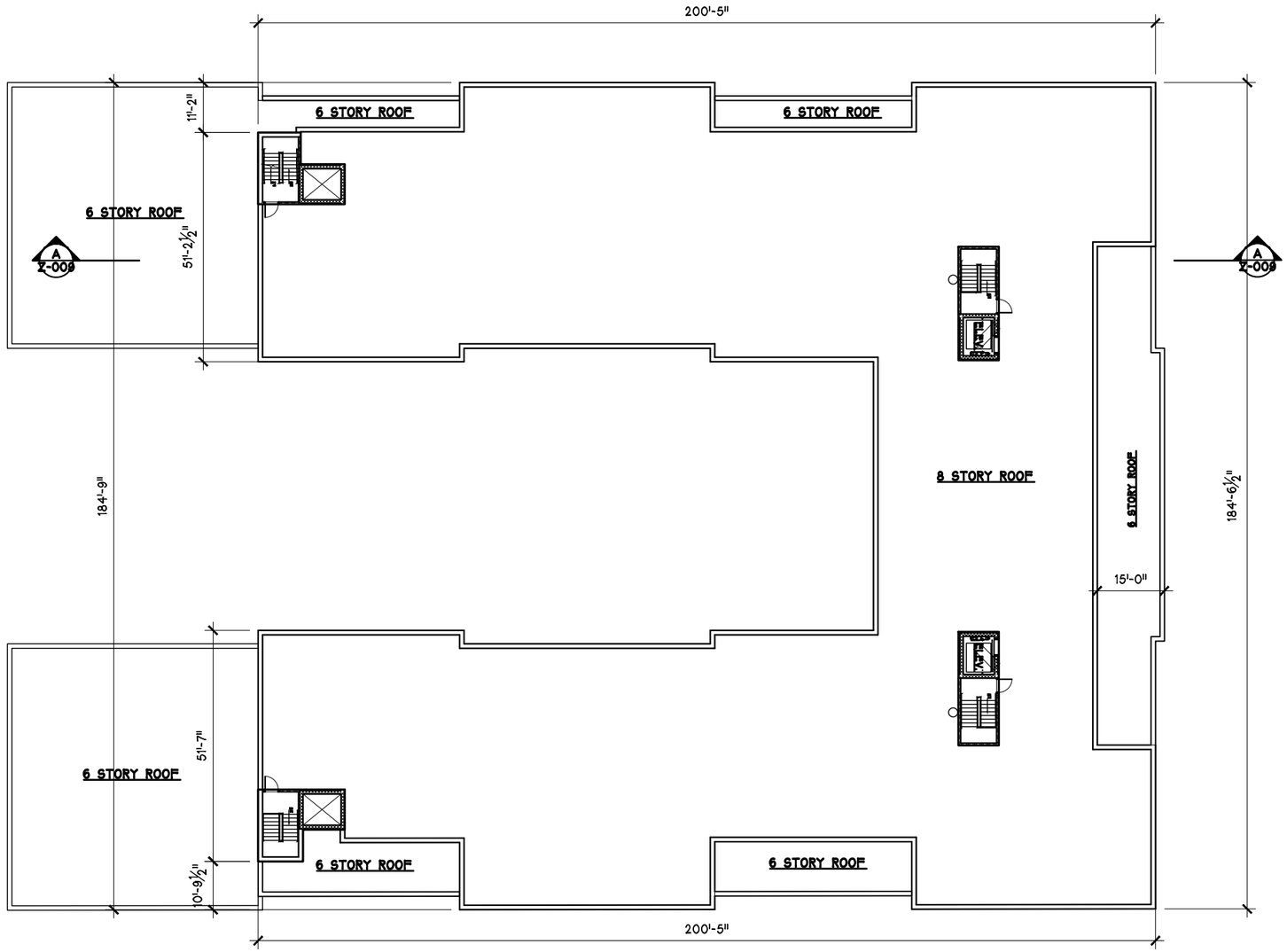

ROOF PLAN
SCALE: 1" = 30'-0"

THE ARCHITECT SHALL NOT HAVE CONTROL OR CHARGE OF AND SHALL NOT BE RESPONSIBLE FOR CONSTRUCTION MEANS, METHODS, DEVIATIONS, TECHNIQUES, SEQUENCES OR PROCEDURES, OR FOR SAFETY PRECAUTIONS AND PROGRAMS IN CONNECTIONS WITH THE WORK, FOR THE ACTS OR OMISSIONS OF THE CONTRACTOR, SUBCONTRACTORS OR ANY OTHER PERSONS PERFORMING ANY OF THE WORK, OR FOR THE FAILURE OF THEM TO CARRY OUT THE WORK IN ACCORDANCE WITH THE CONTRACT DOCUMENTS. ALWAYS USE DIMENSIONS AS SHOWN. DRAWINGS ARE NOT TO BE SCALED. GERALD J. CALIENDO ARCHITECT, P.C. AND ITS PRINCIPAL/EMPLOYEES WERE NOT RETAINED FOR ANY CONSTRUCTION SUPERVISION.

Gerald J. Caliendo, R.A., A.I.A.
Architect, P.C.
Architecture
Interior Design
Code Consultant
Building Dept. Expediting
138-72 Queens Boulevard
Briarwood N.Y. 11435
Tel. (718) 268-9098
Fax (718) 268-9097
www.caliendoarchitects.com

DRAWING TITLE: ROOF PLAN - SITE #1
FOR ILLUSTRATIVE PURPOSES ONLY

PREMISES: 33-33 11th STREET
LONG ISLAND CITY, NY

DRAWN BY:	N.M.M.
CHECKED BY:	GJC
JOB No:	17198 & 19110
SCALE:	AS NOTED
DATE:	4-24-20

REGISTERED ARCHITECT GERALD J. CALIENDO 020241 STATE OF NEW YORK

DRAWING No: 11 OF 22

Z-011.00

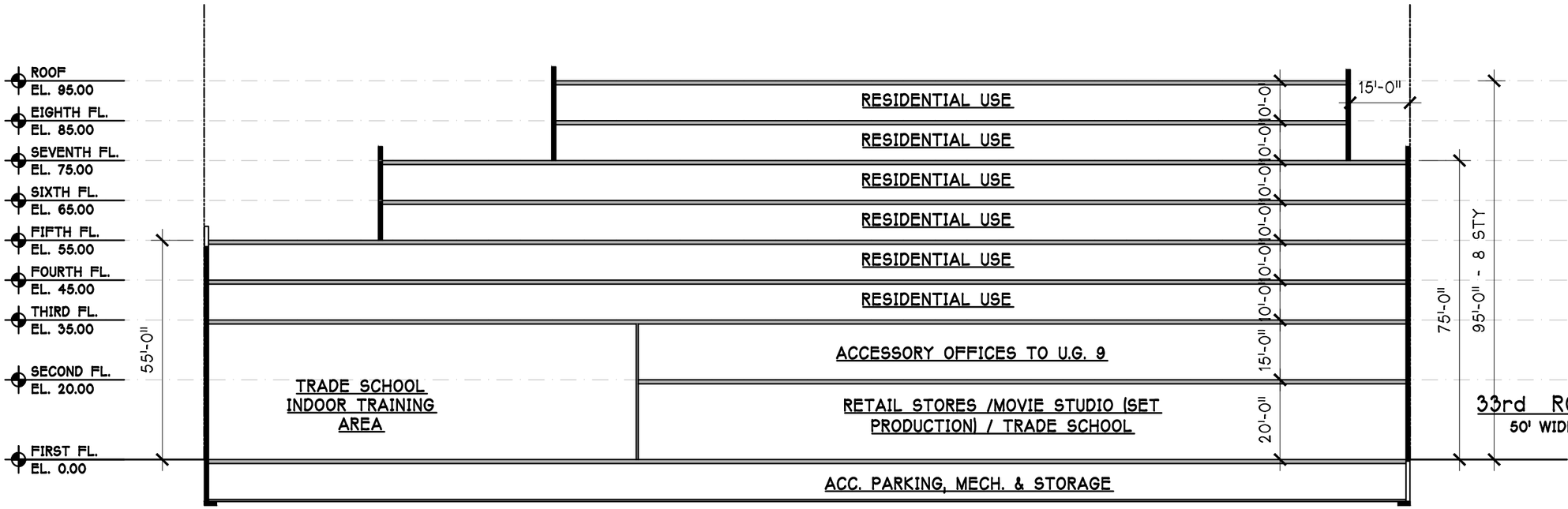

SECTION A-A
SCALE: 1" = 30'-0"

THE ARCHITECT SHALL NOT HAVE CONTROL OR CHARGE OF AND SHALL NOT BE RESPONSIBLE FOR CONSTRUCTION MEANS, METHODS, DEVIATIONS, TECHNIQUES, SEQUENCES OR PROCEDURES, OR FOR SAFETY PRECAUTIONS AND PROGRAMS IN CONNECTIONS WITH THE WORK, FOR THE ACTS OR OMISSIONS OF THE CONTRACTOR, SUBCONTRACTORS OR ANY OTHER PERSONS PERFORMING ANY OF THE WORK, OR FOR THE FAILURE OF THEM TO CARRY OUT THE WORK IN ACCORDANCE WITH THE CONTRACT DOCUMENTS. ALWAYS USE DIMENSIONS AS SHOWN. DRAWINGS ARE NOT TO BE SCALED. GERALD J. CALIENDO ARCHITECT, P.C. AND ITS PRINCIPAL/EMPLOYEES WERE NOT RETAINED FOR ANY CONSTRUCTION SUPERVISION.

Gerald J. Caliendo, R.A., A.I.A.
Architect, P.C.
Architecture
Interior Design
Code Consultant
Building Dept. Expediting
138-72 Queens Boulevard
Briarwood N.Y. 11435
Tel. (718) 268-9098
Fax (718) 268-9097
www.caliendoarchitects.com

DRAWING TITLE: SECTION A-A - SITE #1
FOR ILLUSTRATIVE PURPOSES ONLY

PREMISES: 33-33 11th STREET
LONG ISLAND CITY, NY

DRAWN BY:	N.M.M.	JOB No:	17198 & 19110
CHECKED BY:	GJC	SCALE:	AS NOTED
		DATE:	4-24-20

SEAL:

DRAWING No: 12 OF 22

Z-012.00



SOUTHWEST ELEVATION (11th STREET)

SCALE: 1" = 30'-0"



SOUTHEAST ELEVATION (12th STREET)

SCALE: 1" = 30'-0"

THE ARCHITECT SHALL NOT HAVE CONTROL OR CHARGE OF AND SHALL NOT BE RESPONSIBLE FOR CONSTRUCTION MEANS, METHODS, DEVIATIONS, TECHNIQUES, SEQUENCES OR PROCEDURES, OR FOR SAFETY PRECAUTIONS AND PROGRAMS IN CONNECTIONS WITH THE WORK, FOR THE ACTS OR OMISSIONS OF THE CONTRACTOR, SUBCONTRACTORS OR ANY OTHER PERSONS PERFORMING ANY OF THE WORK, OR FOR THE FAILURE OF THEM TO CARRY OUT THE WORK IN ACCORDANCE WITH THE CONTRACT DOCUMENTS. ALWAYS USE DIMENSIONS AS SHOWN. DRAWINGS ARE NOT TO BE SCALED. GERALD J. CALIENDO ARCHITECT, P.C. AND ITS PRINCIPAL/EMPLOYEES WERE NOT RETAINED FOR ANY CONSTRUCTION SUPERVISION.

Gerald J. Caliendo, R.A., A.I.A.
Architect, P.C.

Architecture
Interior Design
Code Consultant
Building Dept. Expediting

138-72 Queens Boulevard
Briarwood N.Y. 11435

Tel. (718) 268-9098
Fax (718) 268-9097
www.caliendoarchitects.com

DRAWING TITLE: BUILDING ELEVATIONS
FOR ILLUSTRATIVE PURPOSES ONLY

PREMISES: 33-33 11th STREET
LONG ISLAND CITY, NY

DRAWN BY:	CHECKED BY:	JOB No:	SCALE:	DATE:
N.M.M.	GJC	17198 & 19110	AS NOTED	4-24-20

REGISTERED ARCHITECT
GERALD J. CALIENDO
020241
STATE OF NEW YORK

DRAWING No: 18 OF 26

Z-013.00

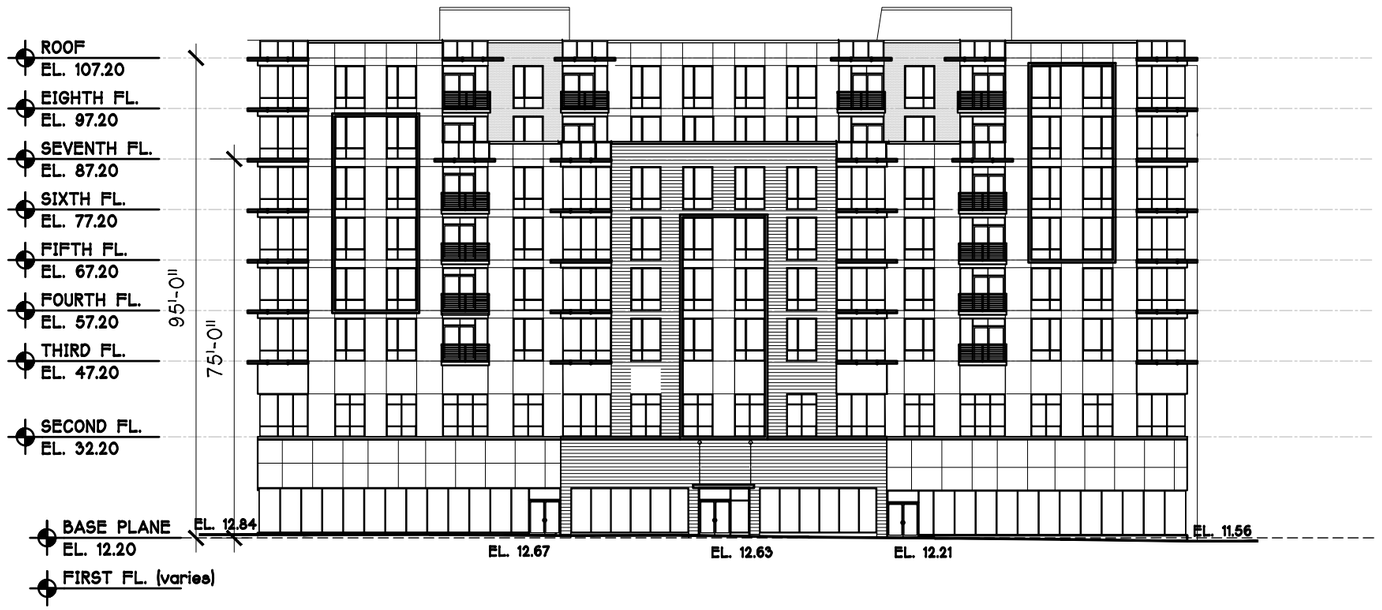

NORTH ELEVATION (33rd ROAD)

SCALE: 1" = 30'-0"

THE ARCHITECT SHALL NOT HAVE CONTROL OR CHARGE OF AND SHALL NOT BE RESPONSIBLE FOR CONSTRUCTION MEANS, METHODS, DEVIATIONS, TECHNIQUES, SEQUENCES OR PROCEDURES, OR FOR SAFETY PRECAUTIONS AND PROGRAMS IN CONNECTIONS WITH THE WORK, FOR THE ACTS OR OMISSIONS OF THE CONTRACTOR, SUBCONTRACTORS OR ANY OTHER PERSONS PERFORMING ANY OF THE WORK, OR FOR THE FAILURE OF THEM TO CARRY OUT THE WORK IN ACCORDANCE WITH THE CONTRACT DOCUMENTS. ALWAYS USE DIMENSIONS AS SHOWN. DRAWINGS ARE NOT TO BE SCALED. GERALD J. CALIENDO ARCHITECT, P.C. AND ITS PRINCIPAL/EMPLOYEES WERE NOT RETAINED FOR ANY CONSTRUCTION SUPERVISION.

Gerald J. Caliendo, R.A., A.I.A.
Architect, P.C.

Architecture
Interior Design
Code Consultant
Building Dept. Expediting

138-72 Queens Boulevard
Briarwood N.Y. 11435

Tel. (718) 268-9098
Fax (718) 268-9097

www.caliendoarchitects.com

DRAWING TITLE: BUILDING ELEVATIONS
FOR ILLUSTRATIVE PURPOSES ONLY

PREMISES: 33-33 11th STREET
LONG ISLAND CITY, NY

DRAWN BY:	CHECKED BY:	JOB No:	SCALE:	DATE:
N.M.M.	GJC	17198 & 19110	AS NOTED	4-24-20

SEAL:

REGISTERED ARCHITECT
GERALD J. CALIENDO
020241
STATE OF NEW YORK

DRAWING No: 14 OF 26

Z-014.00

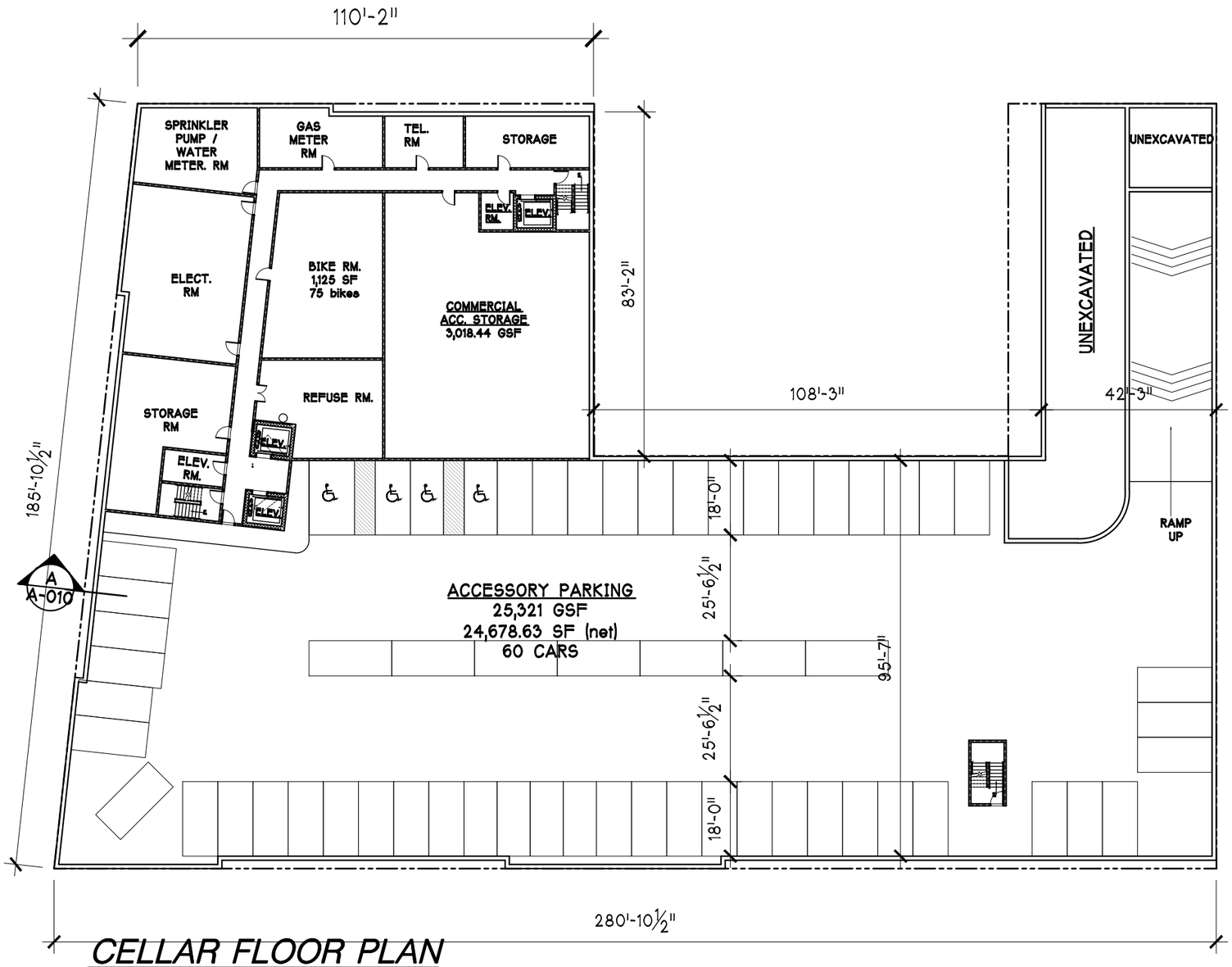

CELLAR FLOOR PLAN

SCALE: 1" = 30'-0"

THE ARCHITECT SHALL NOT HAVE CONTROL OR CHARGE OF AND SHALL NOT BE RESPONSIBLE FOR CONSTRUCTION MEANS, METHODS, DEVIATIONS, TECHNIQUES, SEQUENCES OR PROCEDURES, OR FOR SAFETY PRECAUTIONS AND PROGRAMS IN CONNECTION WITH THE WORK, FOR THE ACTS OR OMISSIONS OF THE CONTRACTOR, SUBCONTRACTORS OR ANY OTHER PERSONS PERFORMING ANY OF THE WORK, OR FOR THE FAILURE OF THEM TO CARRY OUT THE WORK IN ACCORDANCE WITH THE CONTRACT DOCUMENTS. ALWAYS USE DIMENSIONS AS SHOWN. DRAWINGS ARE NOT TO BE SCALED. GERALD J. CALIENDO ARCHITECT, P.C. AND ITS PRINCIPAL/EMPLOYEES WERE NOT RETAINED FOR ANY CONSTRUCTION SUPERVISION.

Gerald J. Caliendo, R.A., A.I.A.
Architect, P.C.

Architecture
Interior Design
Code Consultant
Building Dept. Expediting

138-72 Queens Boulevard
Briarwood N.Y. 11435

Tel. (718) 268-9098
Fax (718) 268-9097

www.caliendoarchitects.com

DRAWING TITLE: CELLAR FLOOR PLAN - SITE #2
FOR ILLUSTRATIVE PURPOSES ONLY

PREMISES: 11-11 34TH AVENUE
LONG ISLAND CITY, NY

DRAWN BY:	N.M.M.	JOB No:	17198 & 19110
CHECKED BY:	GJC	SCALE:	AS NOTED
		DATE:	4-24-20

REGISTERED ARCHITECT
GERALD J. CALIENDO
020241
STATE OF NEW YORK
SEAL

DRAWING No: 15 OF 26

Z-015.00

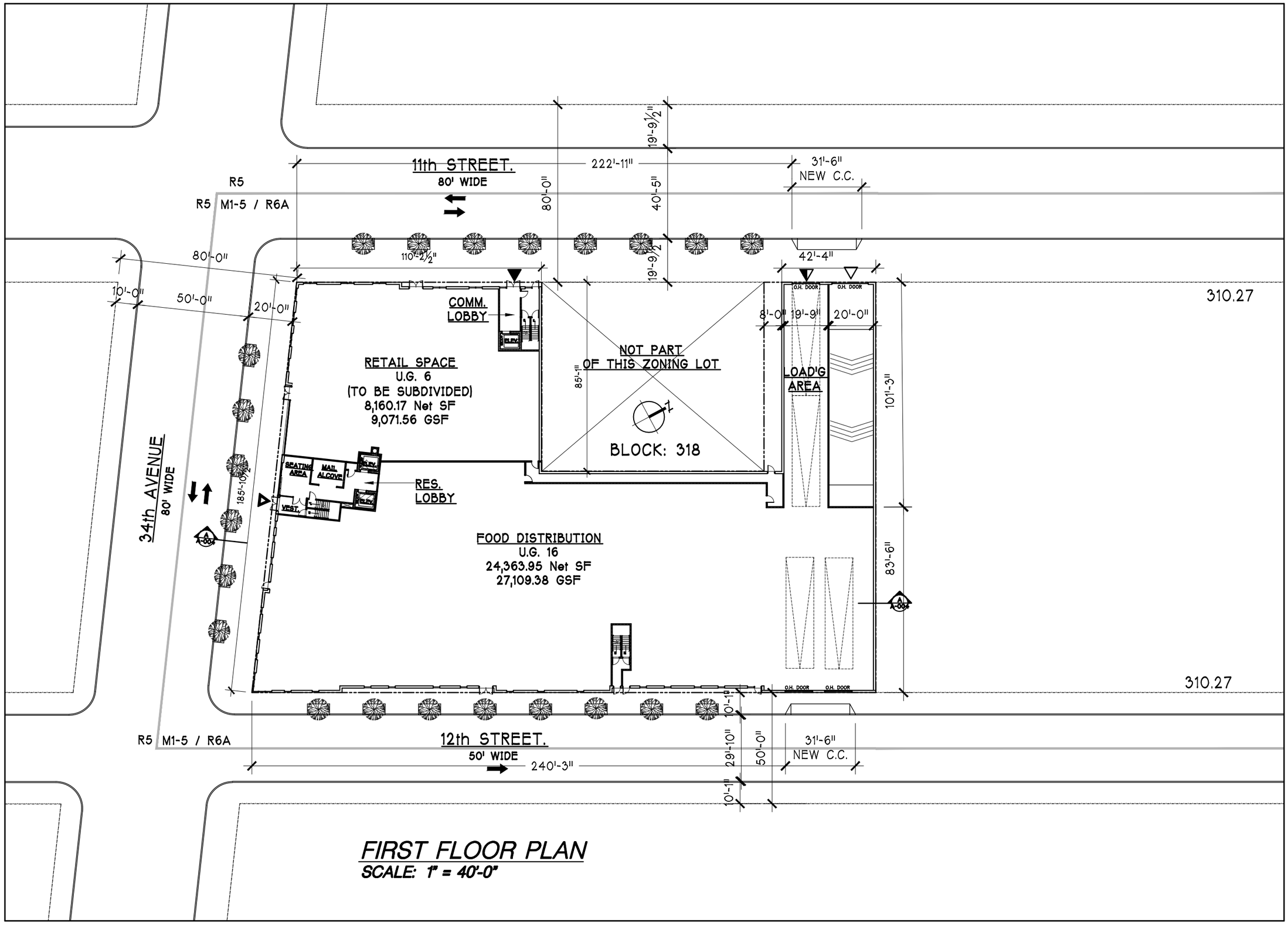

FIRST FLOOR PLAN
SCALE: 1" = 40'-0"

THE ARCHITECT SHALL NOT HAVE CONTROL OR CHARGE OF AND SHALL NOT BE RESPONSIBLE FOR CONSTRUCTION MEANS, METHODS, DEVICES, DEVIATIONS, TECHNIQUES, SEQUENCES OR PROCEDURES, OR FOR SAFETY PRECAUTIONS AND PROGRAMS IN CONNECTIONS WITH THE WORK, FOR THE ACTS OR OMISSIONS OF THE CONTRACTOR, SUBCONTRACTORS OR ANY OTHER PERSONS PERFORMING ANY OF THE WORK, OR FOR THE FAILURE OF THEM TO CARRY OUT THE WORK IN ACCORDANCE WITH THE CONTRACT DOCUMENTS. ALWAYS USE DIMENSIONS AS SHOWN. DRAWINGS ARE NOT TO BE SCALED. GERALD J. CALIENDO ARCHITECT, P.C. AND ITS PRINCIPAL/EMPLOYEES WERE NOT RETAINED FOR ANY CONSTRUCTION SUPERVISION.

Gerald J. Caliendo, R.A., A.I.A.
Architect, P.C.

Architecture
Interior Design
Code Consultant
Building Dept. Expediting

138-72 Queens Boulevard
Briarwood N.Y. 11435

Tel. (718) 268-9098
Fax (718) 268-9097

www.caliendoarchitects.com

DRAWING TITLE: FIRST FLOOR PLAN - SITE #2
FOR ILLUSTRATIVE PURPOSES ONLY

PREMISES: 11-11 34TH AVENUE
LONG ISLAND CITY, NY

DRAWN BY:	N.M.M.
CHECKED BY:	GJC
JOB No:	17198 & 19110
SCALE:	AS NOTED
DATE:	4-24-20

SEAL:
REGISTERED ARCHITECT
GERALD J. CALIENDO
020241
STATE OF NEW YORK

DRAWING No: 16 OF 26

Z-016.00

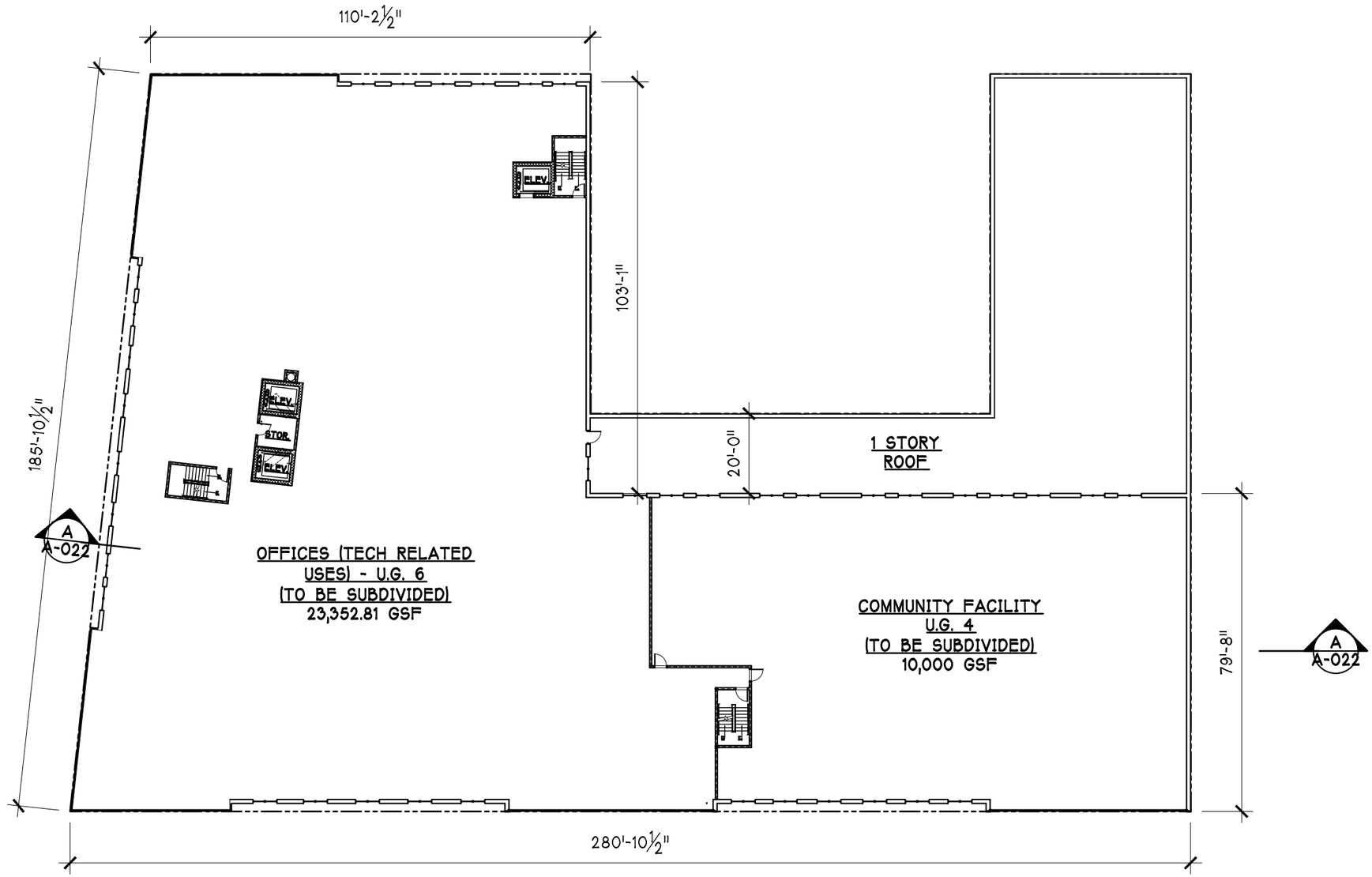

SECOND FLOOR PLAN

SCALE: 1" = 30'-0"

THE ARCHITECT SHALL NOT HAVE CONTROL OR CHARGE OF AND SHALL NOT BE RESPONSIBLE FOR CONSTRUCTION MEANS, METHODS, DEVIATIONS, TECHNIQUES, SEQUENCES OR PROCEDURES, OR FOR SAFETY PRECAUTIONS AND PROGRAMS IN CONNECTIONS WITH THE WORK, FOR THE ACTS OR OMISSIONS OF THE CONTRACTOR, SUBCONTRACTORS OR ANY OTHER PERSONS PERFORMING ANY OF THE WORK, OR FOR THE FAILURE OF THEM TO CARRY OUT THE WORK IN ACCORDANCE WITH THE CONTRACT DOCUMENTS. ALWAYS USE DIMENSIONS AS SHOWN. DRAWINGS ARE NOT TO BE SCALED. GERALD J. CALIENDO ARCHITECT, P.C. AND ITS PRINCIPAL/EMPLOYEES WERE NOT RETAINED FOR ANY CONSTRUCTION SUPERVISION.

Gerald J. Caliendo, R.A., A.I.A.
Architect, P.C.

Architecture
Interior Design
Code Consultant
Building Dept. Expediting

138-72 Queens Boulevard
Briarwood N.Y. 11435

Tel. (718) 268-9098
Fax (718) 268-9097
www.caliendoarchitects.com

DRAWING TITLE: SECOND FLOOR PLAN - SITE #2
FOR ILLUSTRATIVE PURPOSES ONLY

PREMISES: 11-11 34TH AVENUE
LONG ISLAND CITY, NY

DRAWN BY:	N.M.M.
CHECKED BY:	GJC
JOB No:	17198 & 19110
SCALE:	AS NOTED
DATE:	4-24-20

REGISTERED ARCHITECT
GERALD J. CALIENDO
020241
STATE OF NEW YORK

SEAL:

DRAWING No: 17 OF 26

Z-017.00

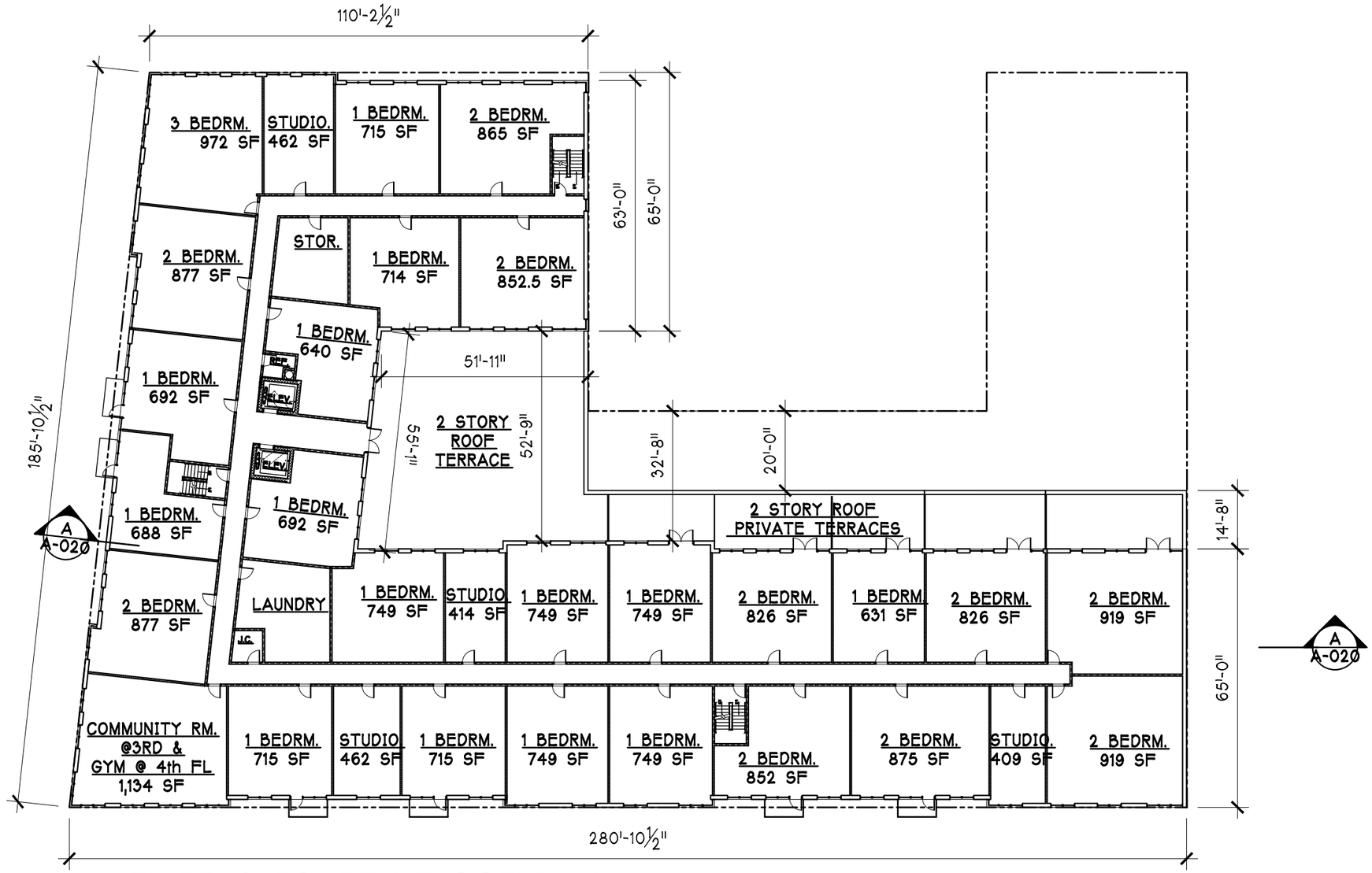

THIRD & FOURTH FLOOR PLAN

SCALE: 1" = 30'-0"

THE ARCHITECT SHALL NOT HAVE CONTROL OR CHARGE OF AND SHALL NOT BE RESPONSIBLE FOR CONSTRUCTION MEANS, METHODS, DEVIATIONS, TECHNIQUES, SEQUENCES OR PROCEDURES, OR FOR SAFETY PRECAUTIONS AND PROGRAMS IN CONNECTIONS WITH THE WORK, FOR THE ACTS OR OMISSIONS OF THE CONTRACTOR, SUBCONTRACTORS OR ANY OTHER PERSONS PERFORMING ANY OF THE WORK, OR FOR THE FAILURE OF THEM TO CARRY OUT THE WORK IN ACCORDANCE WITH THE CONTRACT DOCUMENTS. ALWAYS USE DIMENSIONS AS SHOWN. DRAWINGS ARE NOT TO BE SCALED. GERALD J. CALIENDO ARCHITECT, P.C. AND ITS PRINCIPAL/EMPLOYEES WERE NOT RETAINED FOR ANY CONSTRUCTION SUPERVISION.

Gerald J. Caliendo, R.A., A.I.A.
Architect, P.C.

Architecture
Interior Design
Code Consultant
Building Dept. Expediting

138-72 Queens Boulevard
Briarwood N.Y. 11435

Tel. (718) 268-9098
Fax (718) 268-9097

www.caliendoarchitects.com

DRAWING TITLE: THIRD & FOURTH FLOOR PLAN - SITE #2
FOR ILLUSTRATIVE PURPOSES ONLY

PREMISES: 11-11 34TH AVENUE
LONG ISLAND CITY, NY

DRAWN BY:	N.M.M.	JOB No:	17198 & 19110
CHECKED BY:	GJC	SCALE:	AS NOTED
		DATE:	4-24-20

REGISTERED ARCHITECT GERALD J. CALIENDO 020241 STATE OF NEW YORK

DRAWING No: 16 OF 26

Z-018.00

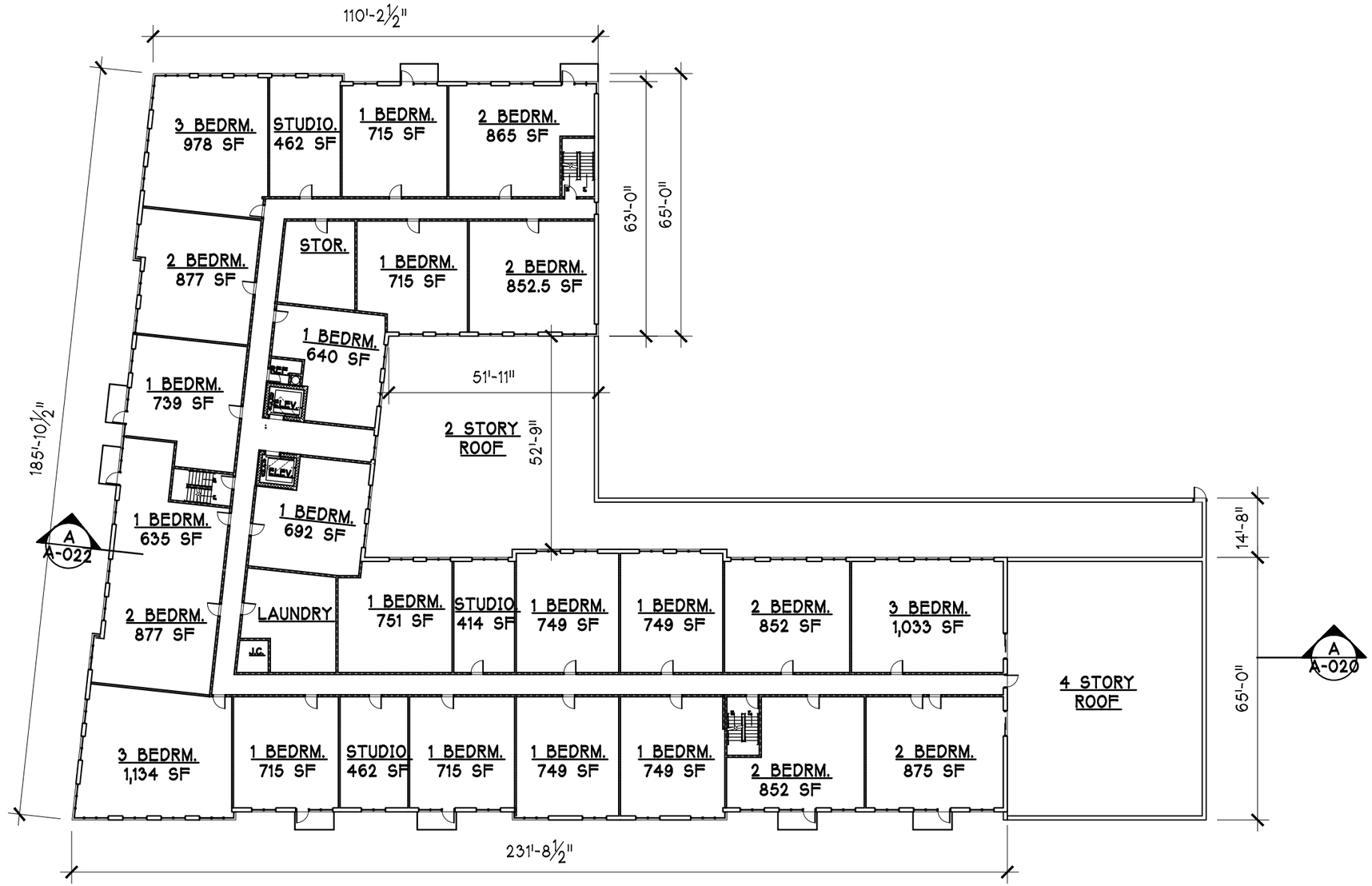

FIFTH & SIXTH FLOOR PLAN

SCALE: 1" = 30'-0"

THE ARCHITECT SHALL NOT HAVE CONTROL OR CHARGE OF AND SHALL NOT BE RESPONSIBLE FOR CONSTRUCTION MEANS, METHODS, DEVIATIONS, TECHNIQUES, SEQUENCES OR PROCEDURES, OR FOR SAFETY PRECAUTIONS AND PROGRAMS IN CONNECTIONS WITH THE WORK, FOR THE ACTS OR OMISSIONS OF THE CONTRACTOR, SUBCONTRACTORS OR ANY OTHER PERSONS PERFORMING ANY OF THE WORK, OR FOR THE FAILURE OF THEM TO CARRY OUT THE WORK IN ACCORDANCE WITH THE CONTRACT DOCUMENTS. ALWAYS USE DIMENSIONS AS SHOWN. DRAWINGS ARE NOT TO BE SCALED. GERALD J. CALIENDO ARCHITECT, P.C. AND ITS PRINCIPAL/EMPLOYEES WERE NOT RETAINED FOR ANY CONSTRUCTION SUPERVISION.

Gerald J. Caliendo, R.A., A.I.A.
Architect, P.C.
Architecture
Interior Design
Code Consultant
Building Dept. Expediting
138-72 Queens Boulevard
Briarwood N.Y. 11435
Tel. (718) 268-9098
Fax (718) 268-9097
www.caliendoarchitects.com

DRAWING TITLE: FIFTH & SIXTH FLOOR PLAN - SITE #2
FOR ILLUSTRATIVE PURPOSES ONLY

PREMISES: 11-11 34TH AVENUE
LONG ISLAND CITY, NY

DRAWN BY:	N.M.M.
CHECKED BY:	GJC
JOB No:	17198 & 19110
SCALE:	AS NOTED
DATE:	4-24-20

REGISTERED ARCHITECT GERALD J. CALIENDO 020241 STATE OF NEW YORK

SEAL:

DRAWING No: 19 OF 26

Z-019.00

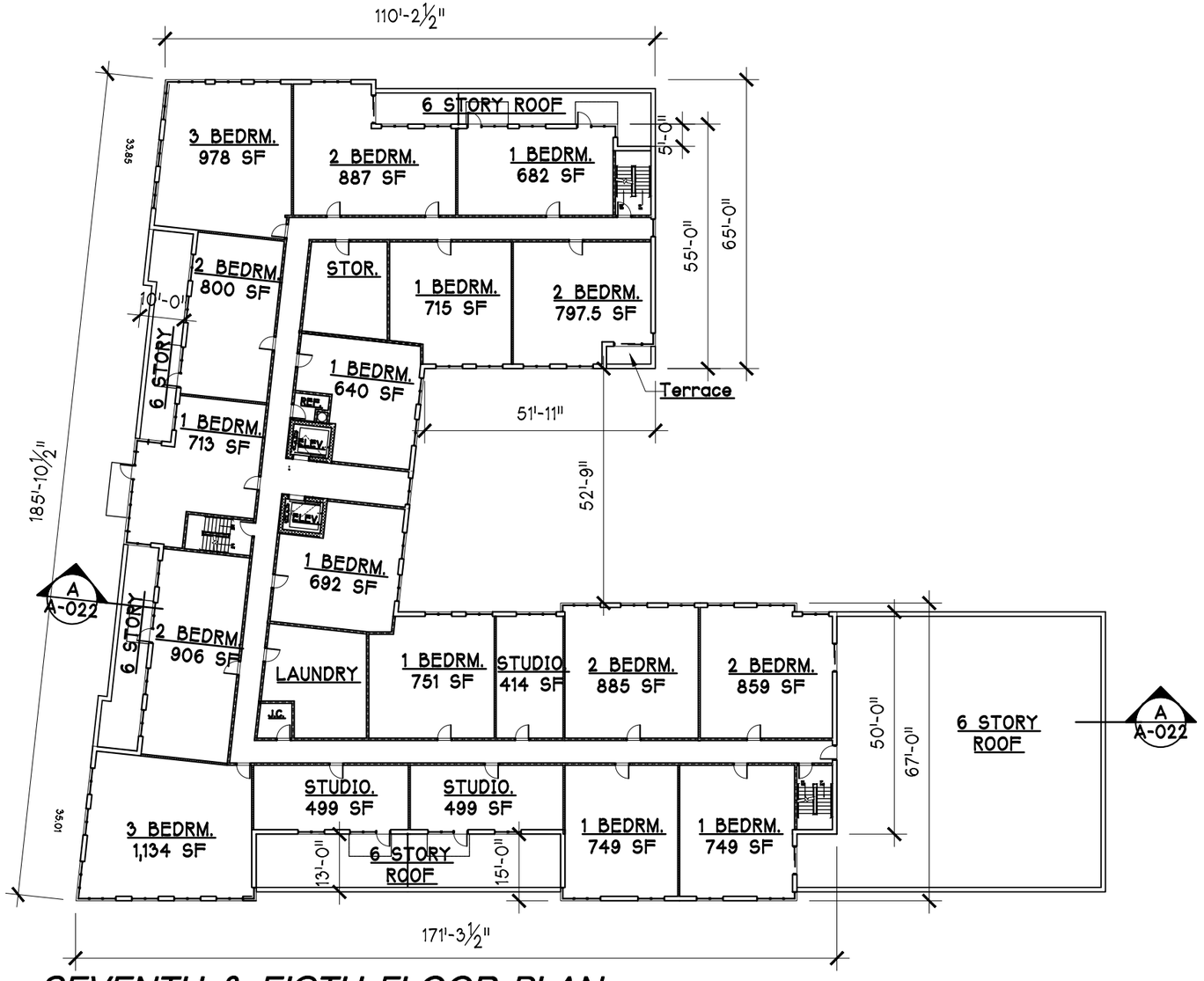

SEVENTH & EIGTH FLOOR PLAN

SCALE: 1" = 30'-0"

THE ARCHITECT SHALL NOT HAVE CONTROL OR CHARGE OF AND SHALL NOT BE RESPONSIBLE FOR CONSTRUCTION MEANS, METHODS, DEVICES, DEVIATIONS, TECHNIQUES, SEQUENCES OR PROCEDURES, OR FOR SAFETY PRECAUTIONS AND PROGRAMS IN CONNECTIONS WITH THE WORK, FOR THE ACTS OR OMISSIONS OF THE CONTRACTOR, SUBCONTRACTORS OR ANY OTHER PERSONS PERFORMING ANY OF THE WORK, OR FOR THE FAILURE OF THEM TO CARRY OUT THE WORK IN ACCORDANCE WITH THE CONTRACT DOCUMENTS. ALWAYS USE DIMENSIONS AS SHOWN. DRAWINGS ARE NOT TO BE SCALED. GERALD J. CALIENDO ARCHITECT, P.C. AND ITS PRINCIPAL/EMPLOYEES WERE NOT RETAINED FOR ANY CONSTRUCTION SUPERVISION.

Gerald J. Caliendo, R.A., A.I.A.
Architect, P.C.

Architecture
Interior Design
Code Consultant
Building Dept. Expediting

138-72 Queens Boulevard
Briarwood N.Y. 11435

Tel. (718) 268-9098
Fax (718) 268-9097
www.caliendoarchitects.com

SEVENTH & EIGTH FLOOR PLAN - SITE #2
FOR ILLUSTRATIVE PURPOSES ONLY

11-11 34TH AVENUE
LONG ISLAND CITY, NY

DRAWN BY:	N.M.M.	DRAWING STATUS:	
CHECKED BY:	GJC	PREMIER:	
JOB No:	17198 & 19110		
SCALE:	AS NOTED		
DATE:	4-24-20		

REGISTERED ARCHITECT
GERALD J. CALIENDO
020241
STATE OF NEW YORK

SEAL:

DRAWING No: 20 OF 26

Z-020.00

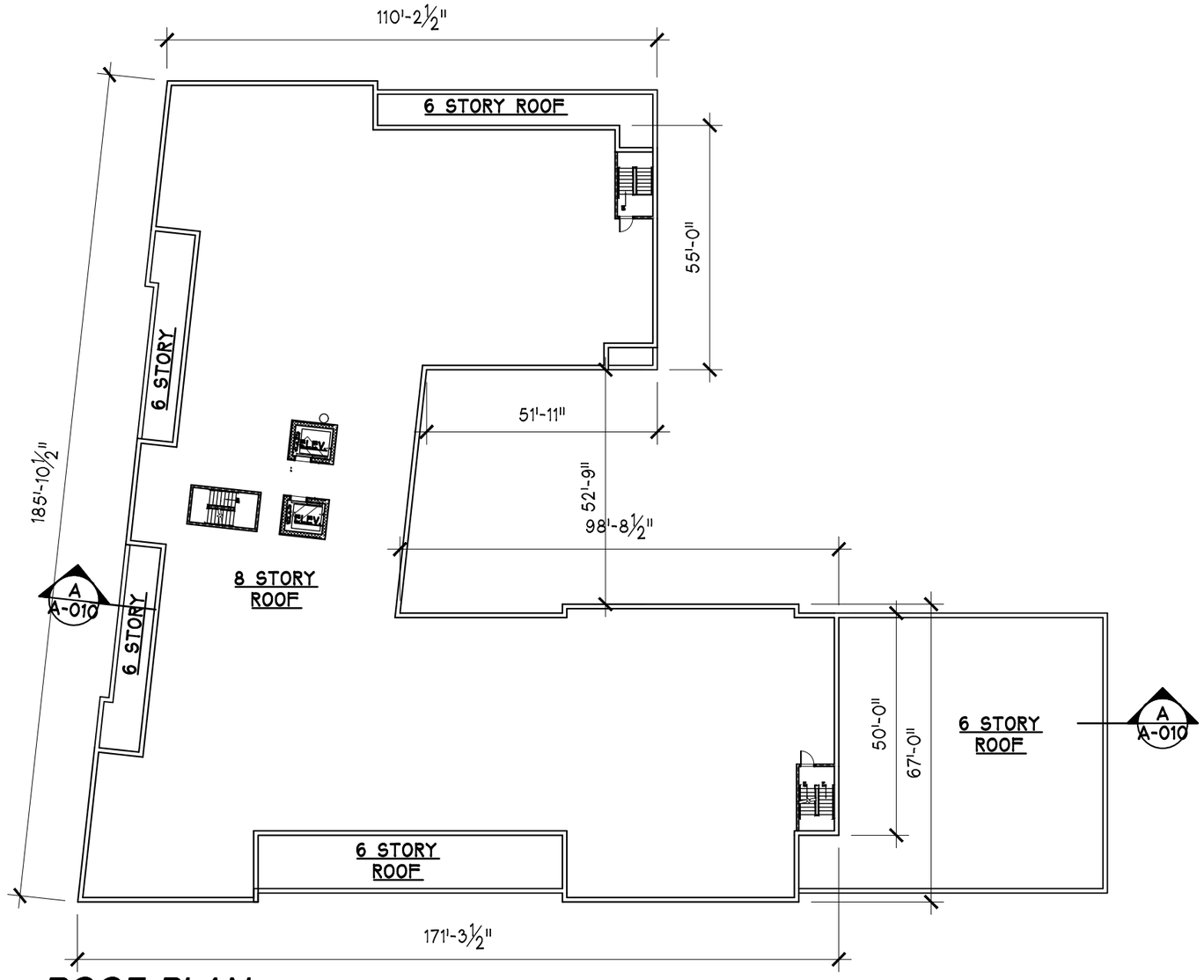

ROOF PLAN
SCALE: 1" = 30'-0"

THE ARCHITECT SHALL NOT HAVE CONTROL OR CHARGE OF AND SHALL NOT BE RESPONSIBLE FOR CONSTRUCTION MEANS, METHODS, DEVIATIONS, TECHNIQUES, SEQUENCES OR PROCEDURES, OR FOR SAFETY PRECAUTIONS AND PROGRAMS IN CONNECTIONS WITH THE WORK, FOR THE ACTS OR OMISSIONS OF THE CONTRACTOR, SUBCONTRACTORS OR ANY OTHER PERSONS PERFORMING ANY OF THE WORK, OR FOR THE FAILURE OF THEM TO CARRY OUT THE WORK IN ACCORDANCE WITH THE CONTRACT DOCUMENTS. ALWAYS USE DIMENSIONS AS SHOWN. DRAWINGS ARE NOT TO BE SCALED. GERALD J. CALIENDO ARCHITECT, P.C. AND ITS PRINCIPAL/EMPLOYEES WERE NOT RETAINED FOR ANY CONSTRUCTION SUPERVISION.

Gerald J. Caliendo, R.A., A.I.A.
Architect, P.C.

Architecture
Interior Design
Code Consultant
Building Dept. Expediting

138-72 Queens Boulevard
Briarwood N.Y. 11435

Tel. (718) 268-9098
Fax (718) 268-9097

www.caliendoarchitects.com

DRAWING TITLE: ROOF PLAN - SITE #2
FOR ILLUSTRATIVE PURPOSES ONLY

PREMISES: 11-11 34TH AVENUE
LONG ISLAND CITY, NY

DRAWN BY:	N.M.M.
CHECKED BY:	GJC
JOB No:	17198 & 19110
SCALE:	AS NOTED
DATE:	4-24-20

SEAL: REGISTERED ARCHITECT GERALD J. CALIENDO 020241 STATE OF NEW YORK

DRAWING No: 21 OF 26

Z-021.00

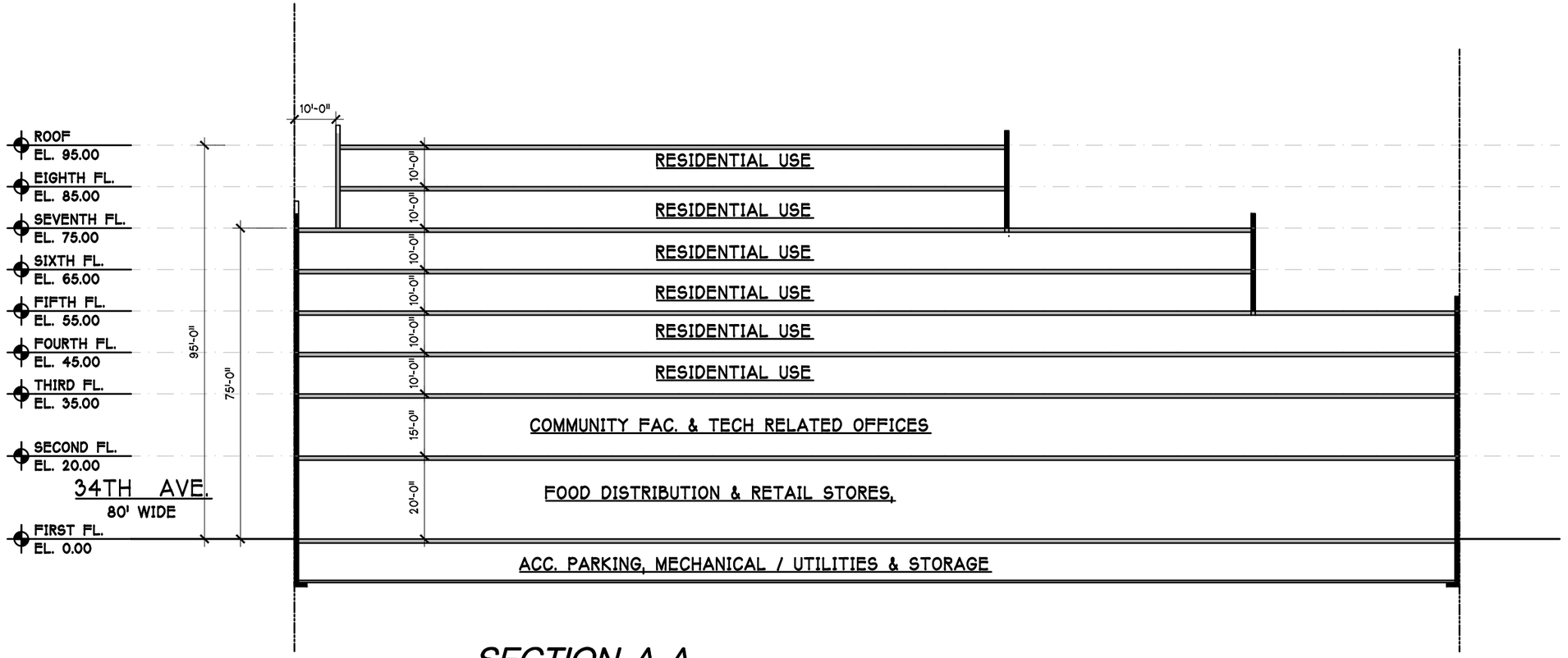

SECTION A-A

SCALE: 1" = 30'-0"

THE ARCHITECT SHALL NOT HAVE CONTROL OR CHARGE OF AND SHALL NOT BE RESPONSIBLE FOR CONSTRUCTION MEANS, METHODS, DEVIATIONS, TECHNIQUES, SEQUENCES OR PROCEDURES, OR FOR SAFETY PRECAUTIONS AND PROGRAMS IN CONNECTIONS WITH THE WORK, FOR THE ACTS OR OMISSIONS OF THE CONTRACTOR, SUBCONTRACTORS OR ANY OTHER PERSONS PERFORMING ANY OF THE WORK, OR FOR THE FAILURE OF THEM TO CARRY OUT THE WORK IN ACCORDANCE WITH THE CONTRACT DOCUMENTS. ALWAYS USE DIMENSIONS AS SHOWN. DRAWINGS ARE NOT TO BE SCALED. GERALD J. CALIENDO ARCHITECT, P.C. AND ITS PRINCIPAL/EMPLOYEES WERE NOT RETAINED FOR ANY CONSTRUCTION SUPERVISION.

Gerald J. Caliendo, R.A., A.I.A.
Architect, P.C.

Architecture
Interior Design
Code Consultant
Building Dept. Expediting

138-72 Queens Boulevard
Briarwood N.Y. 11435

Tel. (718) 268-9098
Fax (718) 268-9097

www.caliendoarchitects.com

DRAWING TITLE: SECTION A-A - MI-5 / R6A - SITE #2
FOR ILLUSTRATIVE PURPOSES ONLY

PREMISES: 11-11 34TH AVENUE
LONG ISLAND CITY, NY

DRAWN BY:	N.M.M.
CHECKED BY:	GJC
JOB No:	17198 & 19110
SCALE:	AS NOTED
DATE:	4-24-20

REGISTERED ARCHITECT
GERALD J. CALIENDO
020241
STATE OF NEW YORK

SEAL:

DRAWING No: 22 OF 26

Z-022.00

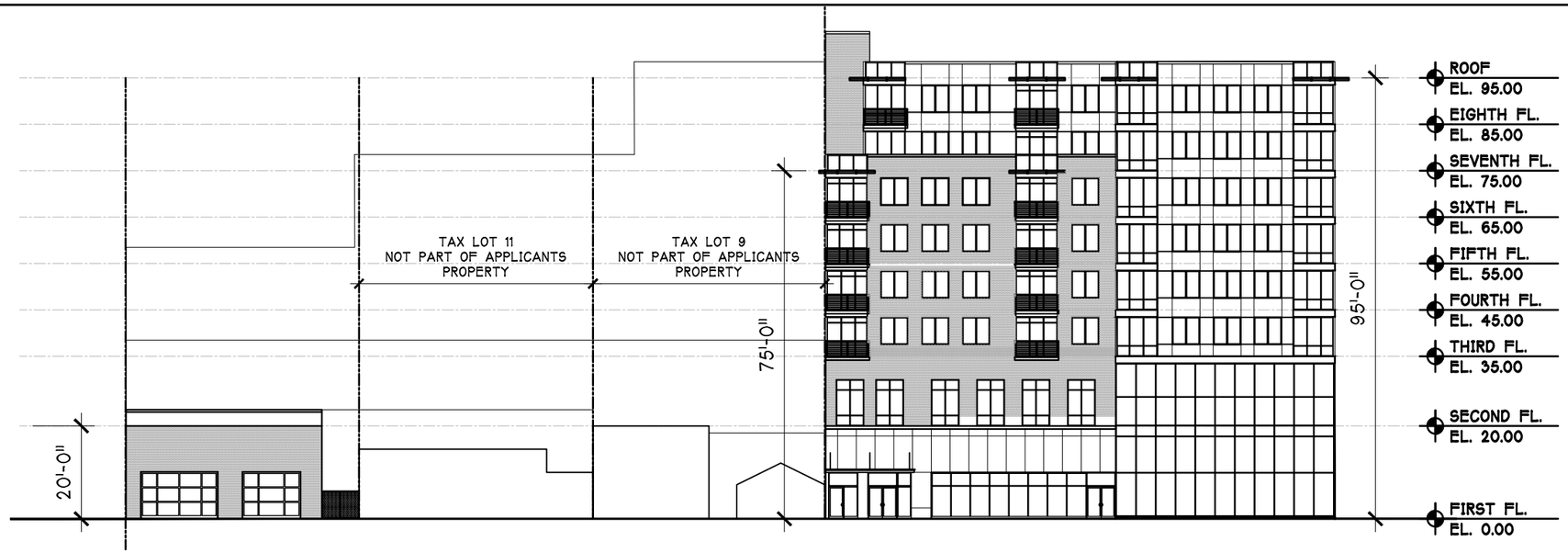

SOUTHWEST ELEVATION (11th STREET)

SCALE: 1" = 30'-0"



SOUTHEAST ELEVATION (12th STREET)

SCALE: 1" = 30'-0"

THE ARCHITECT SHALL NOT HAVE CONTROL OR CHARGE OF AND SHALL NOT BE RESPONSIBLE FOR CONSTRUCTION MEANS, METHODS, DEVIATIONS, TECHNIQUES, SEQUENCES OR PROCEDURES, OR FOR SAFETY PRECAUTIONS AND PROGRAMS IN CONNECTIONS WITH THE WORK; FOR THE ACTS OR OMISSIONS OF THE CONTRACTOR, SUBCONTRACTORS OR ANY OTHER PERSONS PERFORMING ANY OF THE WORK, OR FOR THE FAILURE OF THEM TO CARRY OUT THE WORK IN ACCORDANCE WITH THE CONTRACT DOCUMENTS. ALWAYS USE DIMENSIONS AS SHOWN. DRAWINGS ARE NOT TO BE SCALED. GERALD J. CALIENDO ARCHITECT, P.C. AND ITS PRINCIPAL/EMPLOYEES WERE NOT RETAINED FOR ANY CONSTRUCTION SUPERVISION.

Gerald J. Caliendo, R.A., A.I.A.
Architect, P.C.

Architecture
Interior Design
Code Consultant
Building Dept. Expediting

138-72 Queens Boulevard
Briarwood N.Y. 11435

Tel. (718) 268-9098
Fax (718) 268-9097

www.caliendoarchitects.com

DRAWING TITLE: **BUILDING ELEVATIONS**
FOR ILLUSTRATIVE PURPOSES ONLY

PREMISES: **11-11 34TH AVENUE**
LONG ISLAND CITY, NY

DRAWN BY:	N.M.M.
CHECKED BY:	GJC
JOB No:	17198 & 19110
SCALE:	AS NOTED
DATE:	4-24-20

SEAL:

REGISTERED ARCHITECT
GERALD J. CALIENDO
020241
STATE OF NEW YORK

DRAWING No: 23 OF 26

Z-023.00

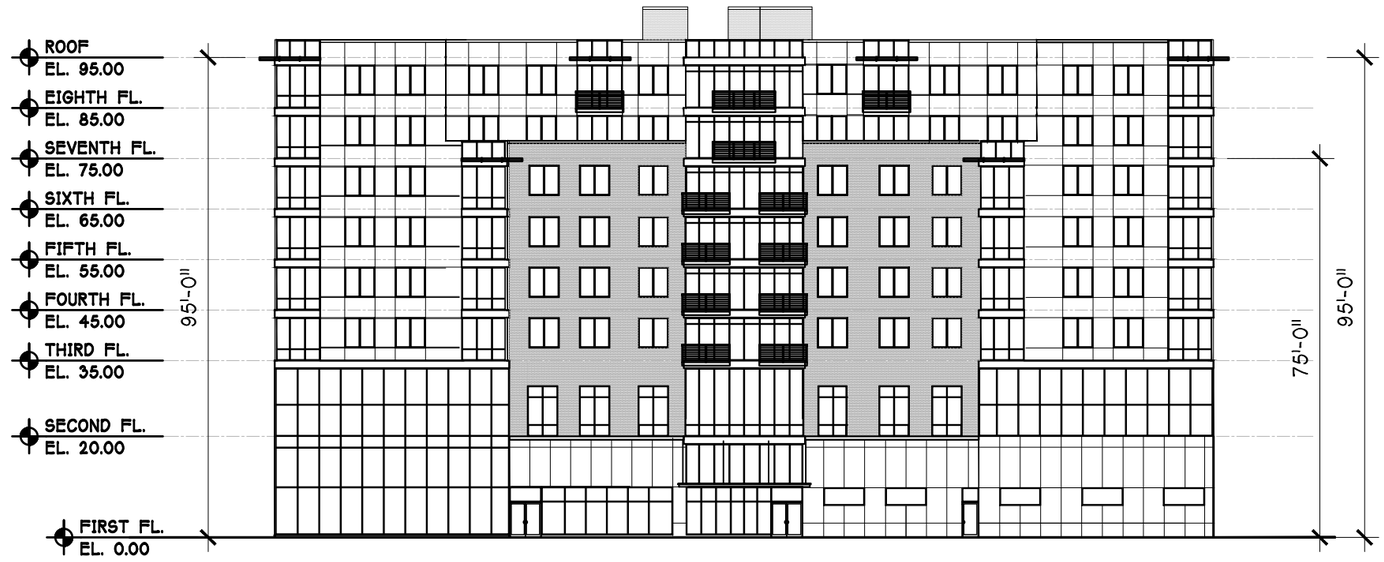

SOUTH ELEVATION (34th AVENUE)

SCALE: 1" = 30'-0"

THE ARCHITECT SHALL NOT HAVE CONTROL OR CHARGE OF AND SHALL NOT BE RESPONSIBLE FOR CONSTRUCTION MEANS, METHODS, DEVIATIONS, TECHNIQUES, SEQUENCES OR PROCEDURES, OR FOR SAFETY PRECAUTIONS AND PROGRAMS IN CONNECTIONS WITH THE WORK, FOR THE ACTS OR OMISSIONS OF THE CONTRACTOR, SUBCONTRACTORS OR ANY OTHER PERSONS PERFORMING ANY OF THE WORK, OR FOR THE FAILURE OF THEM TO CARRY OUT THE WORK IN ACCORDANCE WITH THE CONTRACT DOCUMENTS. ALWAYS USE DIMENSIONS AS SHOWN. DRAWINGS ARE NOT TO BE SCALED. GERALD J. CALIENDO ARCHITECT, P.C. AND ITS PRINCIPAL/EMPLOYEES WERE NOT RETAINED FOR ANY CONSTRUCTION SUPERVISION.

Gerald J. Caliendo, R.A., A.I.A.
Architect, P.C.

Architecture
Interior Design
Code Consultant
Building Dept. Expediting

138-72 Queens Boulevard
Briarwood N.Y. 11435

Tel. (718) 268-9098
Fax (718) 268-9097

www.caliendoarchitects.com

DRAWING TITLE: BUILDING ELEVATION
FOR ILLUSTRATIVE PURPOSES ONLY

PREMISES: 11-11 34TH AVENUE
LONG ISLAND CITY, NY

DRAWN BY:	N.M.M.	JOB No:	17198 & 19110
CHECKED BY:	GJC	SCALE:	AS NOTED
		DATE:	4-24-20

SEAL:
REGISTERED ARCHITECT
GERALD J. CALIENDO
020241
STATE OF NEW YORK

DRAWING No: 24 OF 26

Z-024.00

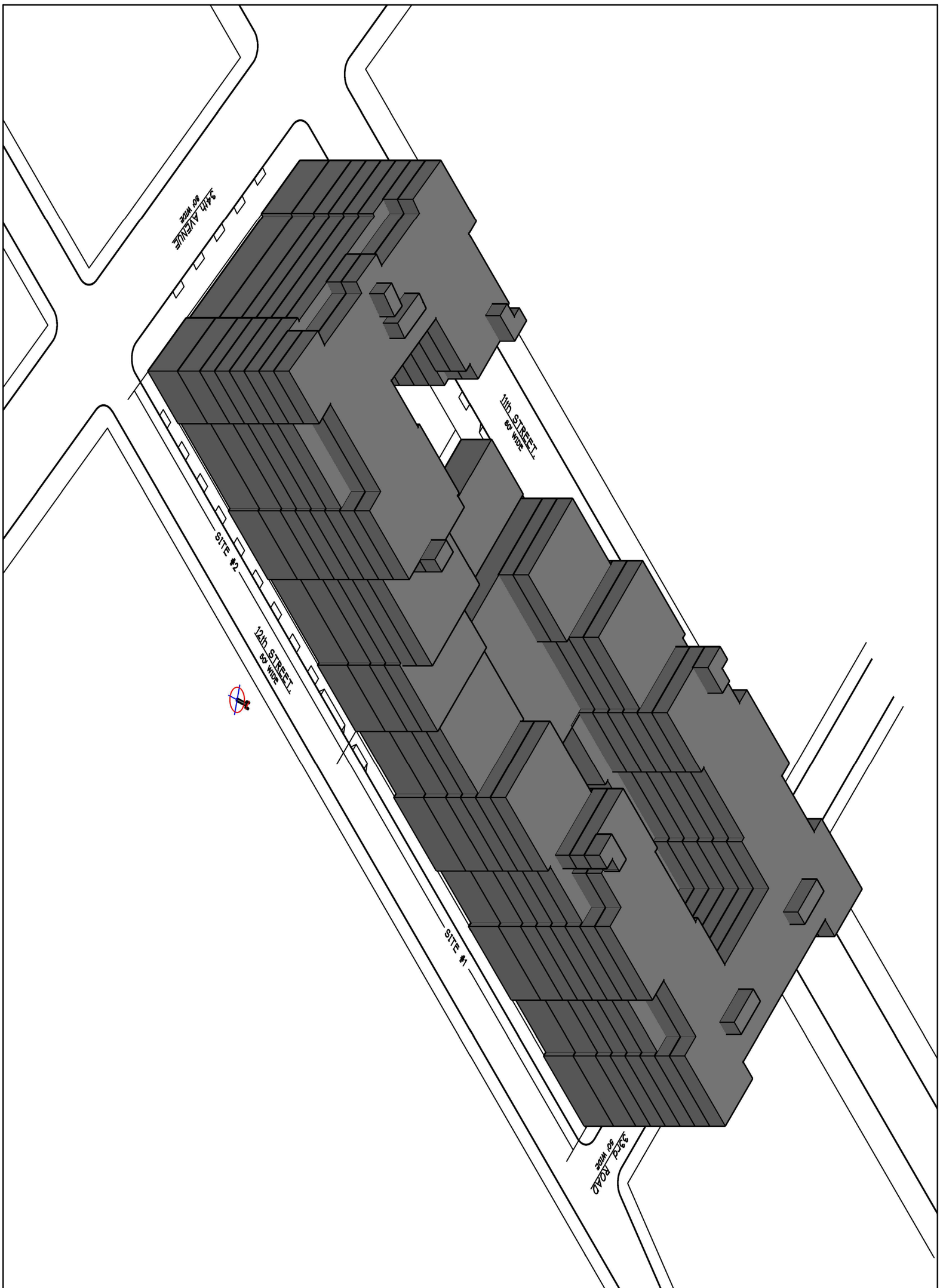

THE ARCHITECT SHALL NOT HAVE CONTROL OR CHARGE OF AND SHALL NOT BE RESPONSIBLE FOR CONSTRUCTION MEANS, METHODS, DEVIATIONS, TECHNIQUES, SEQUENCES OR PROCEDURES, OR FOR SAFETY PRECAUTIONS AND PROGRAMS IN CONNECTIONS WITH THE WORK, FOR THE ACTS OR OMISSIONS OF THE CONTRACTOR, SUBCONTRACTORS OR ANY OTHER PERSONS PERFORMING ANY OF THE WORK, OR FOR THE FAILURE OF THEM TO CARRY OUT THE WORK IN ACCORDANCE WITH THE CONTRACT DOCUMENTS. ALWAYS USE DIMENSIONS AS SHOWN. DRAWINGS ARE NOT TO BE SCALED. GERALD J. CALIENDO ARCHITECT, P.C. AND ITS PRINCIPAL/EMPLOYEES WERE NOT RETAINED FOR ANY CONSTRUCTION SUPERVISION.

Z-025.00

DRAWING No: 25 OF 28

SEAL: REGISTERED ARCHITECT GERALD J. CALIENDO 026024 STATE OF NEW YORK

DRAWN BY:	N.M.M.
CHECKED BY:	GJC
JOB No:	17198 & 19110
SCALE:	AS NOTED
DATE:	4-24-20

DRAWING TITLE: MASSING DIAGRAM - M1-5 / R6A
FOR ILLUSTRATIVE PURPOSES ONLY

PREMISES: 33-33 11th STREET &
11-11 34th AVENUE
LONG ISLAND CITY, NY

Gerald J. Caliendo, R.A., A.I.A.
Architect, P.C.
138-72 Queens Boulevard
Briarwood N.Y. 11435
Tel (718) 268-9098
Fax (718) 268-9097
www.caliendoarchitects.com

Architecture
Interior Design
Code Consultant
Building Dept.
Expediting

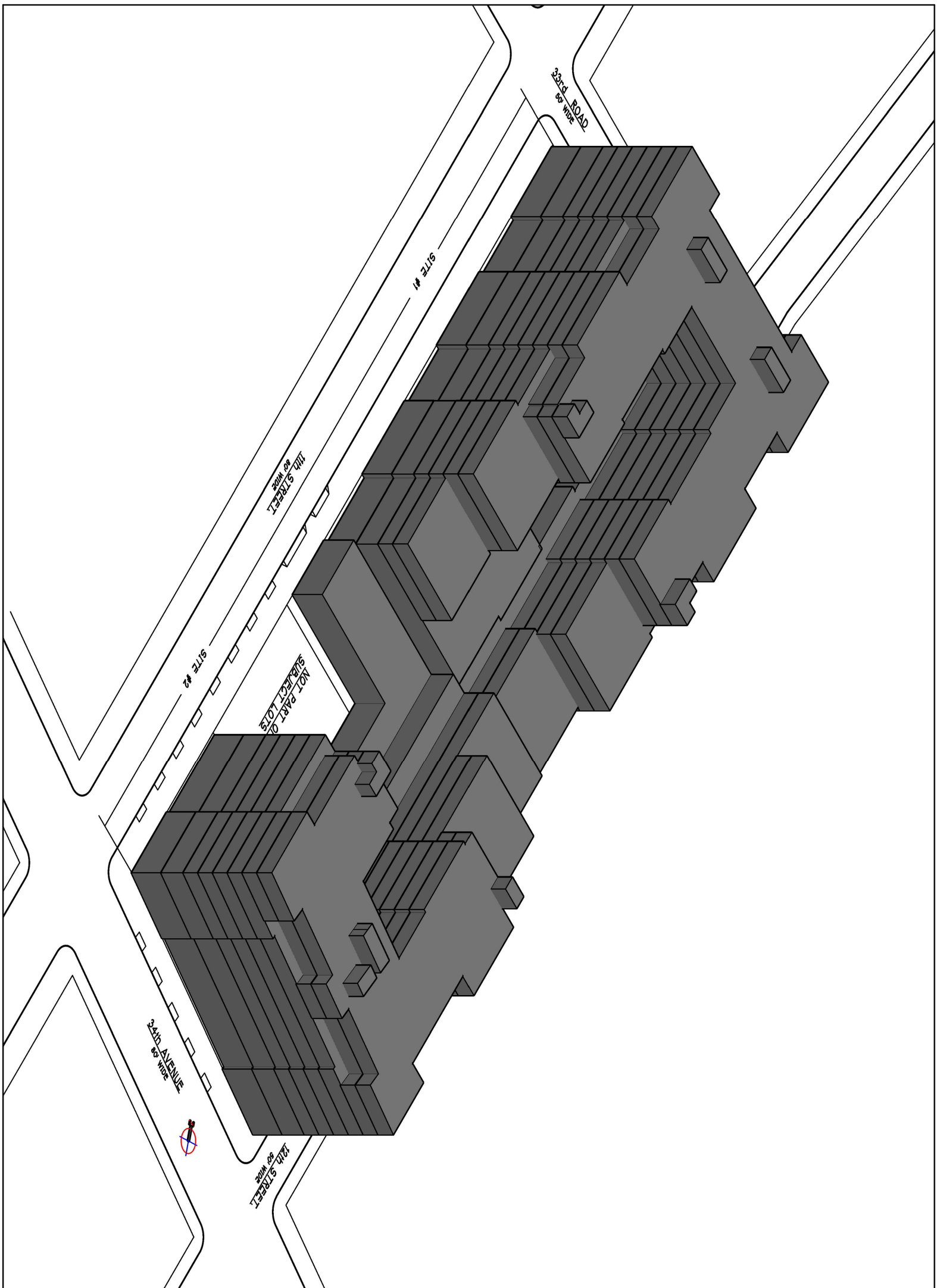

THE ARCHITECT SHALL NOT HAVE CONTROL OR CHARGE OF AND SHALL NOT BE RESPONSIBLE FOR CONSTRUCTION MEANS, METHODS, DEVIATIONS, TECHNIQUES, SEQUENCES OR PROCEDURES, OR FOR SAFETY PRECAUTIONS AND PROGRAMS IN CONNECTIONS WITH THE WORK, FOR THE ACTS OR OMISSIONS OF THE CONTRACTOR, SUBCONTRACTORS OR ANY OTHER PERSONS PERFORMING ANY OF THE WORK, OR FOR THE FAILURE OF THEM TO CARRY OUT THE WORK IN ACCORDANCE WITH THE CONTRACT DOCUMENTS. ALWAYS USE DIMENSIONS AS SHOWN. DRAWINGS ARE NOT TO BE SCALED. GERALD J. CALIENDO ARCHITECT, P.C. AND ITS PRINCIPAL/EMPLOYEES WERE NOT RETAINED FOR ANY CONSTRUCTION SUPERVISION.

Z-026.00

DRAWING No: 28 OF 28

SEAL: REGISTERED ARCHITECT GERALD J. CALIENDO 026241 STATE OF NEW YORK

DRAWN BY:	N.M.M.
CHECKED BY:	GJC
JOB No:	17198 & 19110
SCALE:	AS NOTED
DATE:	4-24-20

DRAWING TITLE: MASSING DIAGRAM - M1-5 / R6A
FOR ILLUSTRATIVE PURPOSES ONLY

PREMISES: 33-33 11th STREET &
11-11 34th AVENUE
LONG ISLAND CITY, NY

Gerald J. Caliendo, R.A., A.I.A.
Architect, P.C.
138-72 Queens Boulevard
Briarwood N.Y. 11435
Tel (718) 268-9008
Fax (718) 268-9097
www.caliendoarchitects.com
Architecture
Interior Design
Code Consultant
Building Dept.
Expediting

APPENDIX C

NOISE DATA

Casella CEL Ltd.

Report On CEL-63X

Instrument Model	**CEL-633C**			
Serial Number	1274486	LAS 10%	68 dB	Result
LASmax	79.9 dB	LAS 50%	58.5 dB	
LASmin	50.5 dB	LAS 90%	53 dB	
Start Date & Time	11/7/2019 7:30:01 AM	Calibration (Before) Date	11/7/2019 7:28:49 AM	
Duration	00:20:03 HH:MM:SS	Calibration (After) Date	11/7/2019 7:54:11 AM	
LAeq	63.7 dB	Calibration Drift	-0.2 dB	
End Date & Time	11/7/2019 7:50:04 AM	Battery Low	No	
Notes				

Instrument Model	**CEL-633C**			
Serial Number	1274486	LAS 10%	71.5 dB	Result
LASmax	83.7 dB	LAS 50%	58.5 dB	
LASmin	47.9 dB	LAS 90%	51.5 dB	
Start Date & Time	11/7/2019 12:00:00 PM	Calibration (Before) Date	11/7/2019 11:56:52 AM	
Duration	00:20:15 HH:MM:SS	Calibration (After) Date	11/7/2019 12:20:41 PM	
LAeq	67.4 dB	Calibration Drift	0.2 dB	
End Date & Time	11/7/2019 12:20:15 PM	Battery Low	No	
Notes				

Casella CEL Ltd.

Report On CEL-63X

Instrument Model	**CEL-633C**			
Serial Number	1274486	LAS 10%	69.5 dB	Result
LASmax	85.2 dB	LAS 50%	57 dB	
LASmin	45.1 dB	LAS 90%	49.5 dB	
Start Date & Time	11/7/2019 4:29:58 PM	Calibration (Before) Date	11/7/2019 4:27:44 PM	
Duration	00:20:05 HH:MM:SS	Calibration (After) Date	11/7/2019 4:50:16 PM	
LAeq	65.7 dB	Calibration Drift	0.3 dB	
End Date & Time	11/7/2019 4:50:03 PM	Battery Low	No	
Notes				

Casella CEL Ltd.

Report On CEL-63X

Instrument Model	**CEL-633C**			
Serial Number	1274486	LAS 10%	69.5 dB	Result
LASmax	82 dB	LAS 50%	58 dB	
LASmin	50.2 dB	LAS 90%	53 dB	
Start Date & Time	11/7/2019 7:54:32 AM	Calibration (Before) Date	11/7/2019 7:54:21 AM	
Duration	00:20:02 HH:MM:SS	Calibration (After) Date	11/7/2019 8:14:47 AM	
LAeq	65.7 dB	Calibration Drift	-0.2 dB	
End Date & Time	11/7/2019 8:14:34 AM	Battery Low	No	
Notes				

Casella CEL Ltd.

Report On CEL-63X

Instrument Model	**CEL-633C**			
Serial Number	1274486	LAS 10%	71.5 dB	Result
LASmax	87.3 dB	LAS 50%	57.5 dB	
LASmin	48 dB	LAS 90%	51.5 dB	
Start Date & Time	11/7/2019 12:21:15 PM	Calibration (Before) Date	11/7/2019 12:20:49 PM	
Duration	00:20:08 HH:MM:SS	Calibration (After) Date	11/7/2019 12:41:39 PM	
LAeq	67.7 dB	Calibration Drift	0.0 dB	
End Date & Time	11/7/2019 12:41:23 PM	Battery Low	No	
Notes				

Casella CEL Ltd.

Report On CEL-63X

Instrument Model	**CEL-633C**			
Serial Number	1274486	LAS 10%	69 dB	Result
LASmax	79.7 dB	LAS 50%	59.5 dB	
LASmin	42.7 dB	LAS 90%	51.5 dB	
Start Date & Time	11/7/2019 4:51:00 PM	Calibration (Before) Date	11/7/2019 4:50:26 PM	
Duration	00:20:03 HH:MM:SS	Calibration (After) Date	11/7/2019 5:11:14 PM	
LAeq	65 dB	Calibration Drift	0.1 dB	
End Date & Time	11/7/2019 5:11:03 PM	Battery Low	No	
Notes				

Casella CEL Ltd.

Report On CEL-63X

Instrument Model	**CEL-633C**			
Serial Number	1274486	LAS 10%	67 dB	Result
LASmax	100.9 dB	LAS 50%	61 dB	
LASmin	52.7 dB	LAS 90%	57 dB	
Start Date & Time	11/7/2019 8:16:10 AM	Calibration (Before) Date	11/7/2019 8:14:59 AM	
Duration	00:20:02 HH:MM:SS	Calibration (After) Date	11/7/2019 8:36:25 AM	
LAeq	75.3 dB	Calibration Drift	0.0 dB	
End Date & Time	11/7/2019 8:36:12 AM	Battery Low	No	
Notes				

Casella CEL Ltd.

Report On CEL-63X

Instrument Model	**CEL-633C**			
Serial Number	1274486	LAS 10%	71 dB	Result
LASmax	88.5 dB	LAS 50%	55 dB	
LASmin	43 dB	LAS 90%	50.5 dB	
Start Date & Time	11/7/2019 12:43:01 PM	Calibration (Before) Date	11/7/2019 12:41:48 PM	
Duration	00:20:10 HH:MM:SS	Calibration (After) Date	11/7/2019 1:03:25 PM	
LAeq	68.1 dB	Calibration Drift	0.2 dB	
End Date & Time	11/7/2019 1:03:11 PM	Battery Low	No	
Notes				

Instrument Model	**CEL-633C**			
Serial Number	1274486	LAS 10%	67.5 dB	Result
LASmax	98.9 dB	LAS 50%	57 dB	
LASmin	41 dB	LAS 90%	48.5 dB	
Start Date & Time	11/7/2019 5:11:58 PM	Calibration (Before) Date	11/7/2019 5:11:24 PM	
Duration	00:20:02 HH:MM:SS	Calibration (After) Date	11/7/2019 5:32:23 PM	
LAeq	71.4 dB	Calibration Drift	-0.1 dB	
End Date & Time	11/7/2019 5:32:00 PM	Battery Low	No	
Notes				

Casella CEL Ltd.

Report On CEL-63X

Instrument Model	**CEL-633C**			
Serial Number	1274486	LAS 10%	68 dB	Result
LASmax	84.3 dB	LAS 50%	60 dB	
LASmin	46.3 dB	LAS 90%	51.5 dB	
Start Date & Time	11/7/2019 8:38:39 AM	Calibration (Before) Date	11/7/2019 8:36:36 AM	
Duration	00:21:12 HH:MM:SS	Calibration (After) Date	11/7/2019 9:00:12 AM	
LAeq	66.9 dB	Calibration Drift	-0.1 dB	
End Date & Time	11/7/2019 8:59:51 AM	Battery Low	No	
Notes				

Casella CEL Ltd.

Report On CEL-63X

Instrument Model	**CEL-633C**			
Serial Number	1274486	LAS 10%	64 dB	Result
LASmax	86 dB	LAS 50%	53.5 dB	
LASmin	40 dB	LAS 90%	49.5 dB	
Start Date & Time	11/7/2019 1:05:15 PM	Calibration (Before) Date	11/7/2019 1:03:38 PM	
Duration	00:20:03 HH:MM:SS	Calibration (After) Date	11/7/2019 1:25:33 PM	
LAeq	62.5 dB	Calibration Drift	0.0 dB	
End Date & Time	11/7/2019 1:25:18 PM	Battery Low	No	
Notes				

Casella CEL Ltd.

Report On CEL-63X

Instrument Model	**CEL-633C**			
Serial Number	1274486	LAS 10%	60.5 dB	Result
LASmax	92.7 dB	LAS 50%	44.5 dB	
LASmin	34.5 dB	LAS 90%	38 dB	
Start Date & Time	11/7/2019 5:43:40 PM	Calibration (Before) Date	11/7/2019 5:32:32 PM	
Duration	00:20:02 HH:MM:SS	Calibration (After) Date	11/7/2019 6:04:07 PM	
LAeq	64.6 dB	Calibration Drift	-0.2 dB	
End Date & Time	11/7/2019 6:03:42 PM	Battery Low	No	
Notes				

9/11/19 Grand Concourse

Site Sketch:

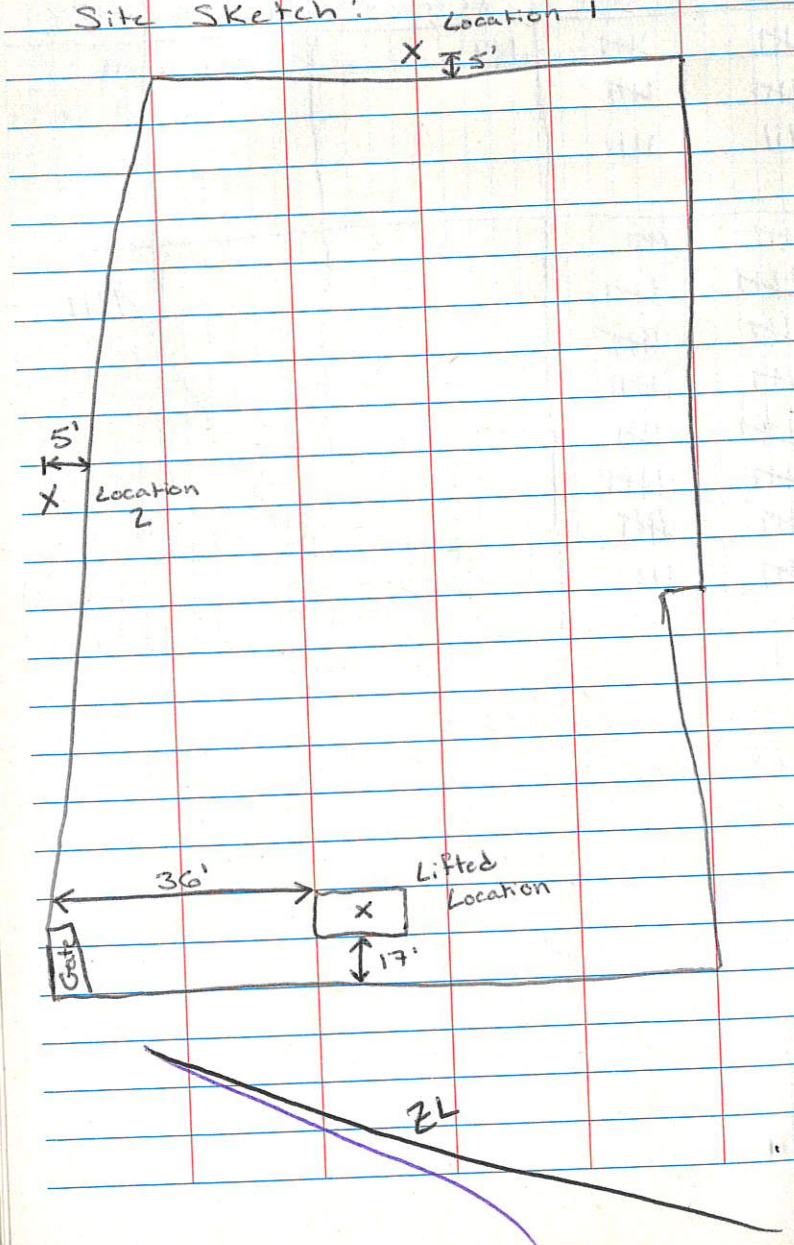

33-33 11th Street 11/7/19

Personnel: BJ, ZL

Scope: Phase I, Noise

Weather: Partly cloudy, 50's, Windy

Depart: 0545

Arrive: 0705

Casella SN:

Calibrator SN:

Begin Location 1 @ 0730

0750 End Session 1

0754 Begin Location 2

0814 End Location 2

0816 Begin Location 3

0836 End Location 3

0838 Begin Location 4

0858 End Location 4

- Calibrate Before + After each Session

0907 Call number given for George (site contact). I was told he was on his way and gave my name + number.

- Continued to walk around Block looking for George or Building Employees to ask.

0918 called Bob Jackson who spoke with George. George left the area and gave permission for us to proceed through the buildings unguided.

0930 Bob Jackson onsite

0935 Begin walk around Block
- 1 Possible fill port spotted in front of curb mobility.
- Nothing else concerning Notice

0945 spoke with ~~Terrance~~ Building Manager of Lot 22 (Mitchel's NY
He was unaware of the scheduled phase I, but agreed to show us the building.

Lot 22:
- Loading deck has a trench drain below the trucks.
- Shipping + Recieving
  - Grocery
  - Lighting
  - MRO
  - No chemicals
  - No Petroleum
- NO Building, City Water + Sewer
- 2 ForkLifts, No maintenance on site
- Nothing on the roof
- Open Floor drain used for Spraying + Cleaning the open floor
- Occupied for 5 yrs
- No recent major modifications

Lot 15:
Control Cargo Solutions:
- Owner will be back in 20 min

Zahner's Restaurant City:
- Central Construction Management
- Equipment Warehouse
- Small trash Compactor on site
  - Hydraulic but no staining
- Gas cans stored in cabinet
- Bitchumene, Concrete Sealer, + Sand stored on open shelves + Paint
- Open hole in Loading dock area
- Oil + other petroleum stored on shelves near Loading Dock.
- Natural Gas units, Con Ed Electric
- only maintence onsite is electric motors + hydraulic wenches
- Tour by William
- Oxygen + Acetalene tanks

Lot 1:
Curb -
- Taxi Maintenance + Rooftop sign installation
- Storage of Electronic equipment
- Will return later to complete because manager was not aware of our visit.

Lot 15:
Control Cargo solutions -
- Owner has still not arrived.

- Small open building, Employees do not speak English + could not confirm questions.
- Floor is asbestos tiles that are falling off
- Sign says Shipping for Columbia, Ecuador, and Mexico (www.ccscargousa.com)

Curb Mobile owner:

↳ 917 952 8216 = John Pantanello's phone # for Curb

1120 Bob Jackson Depart Site

1200 Start Location 1

1220 End Location 1

1221 Start Location 2

1241 End Location 2

1243 Start Location 3

1303 End Location 3

1305 Start Location 4

1325 End Location 4

1550 Return to Curb to Attempt Site Visit. Spoke with Front desk Attendant in Rooftop operation area. She went to speak with Casim (who we spoke to earlier). she returned and told me that they were still not told of the site visit and we cannot enter.

- Viewing parking Lot on South End of the building. Dumpsters are Mr. T Carting

	Car	SUV	M. Truck	H. Truck	Bus
Location 1					
Morning	42	49	3	1	5
Mid Day	29	34	2	0	1
Evening	36	47	0	0	1
Location 2					
Morning	24	20	7	1	4
midday	15	17	1	0	1
Evening	22 37	19	0	0	0
Location 3					
Morning	53	70	10	0	4
Midday	37	35	3	0	2
Evening	41	53	0	0	1
Location 4					
Morning	21	16	0	0	0
Midday	12	19	0	0	0
Evening	15	11	0	0	0

- Small patched Area of Asphalt @ Northern Entrance to parking lot Roughly 3ft x 3ft patch.

1600 spoke with James Cardenas @ Control Cargo Solutions and he showed me the building.

- Specifically ship various items to Columbia (TV, small electronics, etc.)

- Building has peeling Asbestos Tiles
- 1 Forklift onsite, No maintenance done
- 1 Gas container stored in small closet
- Small power tools stored on open shelf in main area.
- 2 small cans of Wood Finish on the Floor of the main Area.
- No visible Floor drains noticed.
- No heating in the building
- Electric is Con Ed, City Water + Sewer

1630 Start Location 1
1650 Stop Loc. 1
1651 Start Loc 2
1711 Stop Loc 2
1712 Start Loc 3
1732 Stop Loc 3
1734 Start Loc 4
- Checked Meter @ 1744 and it shut off
1744 Restart Loc 4.
1804 End Loc 4
1810 Depart:
1945 Arrive

ZL

Location 1 (33 Rd and 11th St): Existing Noise PCE Value						
	Existing Vehicle Counts AM	Existing AM Peak Hour Noise PCE Value	Existing Vehicle Counts MD	Existing MD Peak Hour Noise PCE Value	Existing Vehicle Counts PM	Existing PM Peak Hour Noise PCE Value
Car/ Taxi	175	175	235	235	224	224
Van/Light Truck/SUV	0	0	0	0	0	0
Medium Truck	8	98	12	156	9	117
Heavy Truck	3	118	0	0	0	0
Bus	12	216	4	72	6	108
Total Noise PCE	-	606	-	463	-	449

Location 1 (33 Rd and 11th St): Existing VS. With-Action Noise PCE Screening						
	With Action AM Peak Hour Vehicles	With Action AM Peak Hour Noise PCE Value	With Action MD Peak Hour Vehicles	With Action MD Peak Hour Noise PCE Value	With Action PM Peak Hour Vehicles	With Action PM Peak Hour Noise PCE Value
Car/ Taxi	184	184	263	263	273	273
Van/Light Truck/SUV	0	0	0	0	0	0
Medium Truck	-5	-69	11	142	7	95
Heavy Truck	3	118	0	0	0	0
Bus	12	216	4	72	6	108
Total Noise PCE	-	449	-	477	-	476
Noise PCE Increment	AM	-157	MD	14	PM	27
% Increase		**-26%**		**3%**		**6%**

***Notes:**

Evaluates Existing Vehicle Counts at Noise Location 1 (33rd Road and 11th Street) and Incremental Project Generated Vehicles at Traffic Study Intersection 9 (33rd Road and 11th Street)

All Project-Generated incremental trucks conservatively assumed Medium Trucks at this location as there is a net netgative incremental truck trips during all peak hours.

All numbers rounded to the nearest whole

Location 2 (11th St btwn 33rd Rd and 34th Ave): Existing Noise PCE Value						
	Existing Vehicle Counts AM	Existing AM Peak Hour Noise PCE Value	Existing Vehicle Counts MD	Existing MD Peak Hour Noise PCE Value	Existing Vehicle Counts PM	Existing PM Peak Hour Noise PCE Value
Car/ Taxi	173	173	209	209	193	193
Van/Light Truck/SUV	0	0	0	0	0	0
Medium Truck	20	262	14	182	12	156
Heavy Truck	3	135	0	0	0	0
Bus	14	252	4	72	5	90
Total Noise PCE	-	822	-	463	-	439

Location 2 (11th St btwn 33rd Rd and 34th Ave): Existing VS. With-Action Noise PCE Screening						
	With Action AM Peak Hour Vehicles	With Action AM Peak Hour Noise PCE Value	With Action MD Peak Hour Vehicles	With Action MD Peak Hour Noise PCE Value	With Action PM Peak Hour Vehicles	With Action PM Peak Hour Noise PCE Value
Car/ Taxi	199	199	265	265	250	250
Van/Light Truck/SUV	0	0	0	0	0	0
Medium Truck	22	287	16	210	14	185
Heavy Truck	9	405	6	300	7	317
Bus	14	252	4	72	5	90
Total Noise PCE	-	1143	-	847	-	842
Noise PCE Increment	AM	321	MD	384	PM	403
% Increase		**39%**		**83%**		**92%**

***Notes:**

Evaluates Existing Vehicle Counts at Noise Location 2 (11th Street between 33rd Road and 34th Avenue) and Incremental Project Generated Vehicles at Site 2 (11th Street between 33rd Road and 34th Avenue)

All incremental project generated trucks at this location assumed 75% Heavy/25% Medium

All numbers rounded to the nearest whole

Location 3 (34 Ave and 11th St): Existing Noise PCE Value						
	Existing Vehicle Counts AM	Existing AM Peak Hour Noise PCE Value	Existing Vehicle Counts MD	Existing MD Peak Hour Noise PCE Value	Existing Vehicle Counts PM	Existing PM Peak Hour Noise PCE Value
Car/ Taxi	438	438	442	442	486	486
Van/Light Truck/SUV	0	0	0	0	0	0
Medium Truck	36	468	24	312	19	247
Heavy Truck	0	0	8	376	0	0
Bus	29	522	9	162	10	180
Total Noise PCE	-	1428	-	1292	-	913

Location 3 (34th Ave and 11th St): Existing VS. With-Action Noise PCE Screening						
	With Action AM Peak Hour Vehicles	With Action AM Peak Hour Noise PCE Value	With Action MD Peak Hour Vehicles	With Action MD Peak Hour Noise PCE Value	With Action PM Peak Hour Vehicles	With Action PM Peak Hour Noise PCE Value
Car/ Taxi	483	483	507	507	546	546
Van/Light Truck/SUV	0	0	0	0	0	0
Medium Truck	37	486	25	324	20	260
Heavy Truck	4	194	11	511	3	136
Bus	29	522	9	162	10	180
Total Noise PCE	-	1684	-	1505	-	1122
Noise PCE Increment	AM	256	MD	213	PM	209
% Increase		**18%**		**16%**		**23%**

***Notes:**

Evaluates Existing Vehicle Counts at Noise Location 3 (34th Avenue and 11th Street) and Incremental Project Generated Vehicles at Traffic Study Intersection 5 (34th Avenue and 11th Street)

All incremental project generated trucks at this location assumed 75% Heavy/25% Medium

All numbers rounded to the nearest whole

Location 4 (12th St btwn 34th Ave and 33rd Rd): Existing Noise PCE Value						
	Existing Vehicle Counts AM	Existing AM Peak Hour Noise PCE Value	Existing Vehicle Counts MD	Existing MD Peak Hour Noise PCE Value	Existing Vehicle Counts PM	Existing PM Peak Hour Noise PCE Value
Car/ Taxi	100	100	137	137	139	139
Van/Light Truck/SUV	0	0	0	0	0	0
Medium Truck	7	91	8	104	3	39
Heavy Truck	0	0	0	0	0	0
Bus	10	180	0	0	1	18
Total Noise PCE	-	371	-	241	-	196

Location 4 (12th St btwn 34th Ave and 33rd Rd): Existing VS. With-Action Noise PCE Screening						
	With Action AM Peak Hour Vehicles	With Action AM Peak Hour Noise PCE Value	With Action MD Peak Hour Vehicles	With Action MD Peak Hour Noise PCE Value	With Action PM Peak Hour Vehicles	With Action PM Peak Hour Noise PCE Value
Car/ Taxi	200	200	238	238	267	267
Van/Light Truck/SUV	0	0	0	0	0	0
Medium Truck	-23	-305	-9	-121	-17	-220
Heavy Truck	0	0	0	0	0	0
Bus	10	180	0	0	1	18
Total Noise PCE	-	75	-	117	-	65
Noise PCE Increment	AM	-296	MD	-124	PM	-131
% Increase		**-80%**		**-52%**		**-67%**

***Notes:**

Evaluates Existing Vehicle Counts at Noise Location 4 (12th Street btwn 34th Avenue and 33rd Road) and Incremental Project Generated Vehicles at Site 1 (12th Street between 34th Avenue and 33rd Road)

All Project-Generated incremental trucks conservatively assumed Medium Trucks at this location as there is a net netgative incremental truck trips during all peak hours.

All numbers rounded to the nearest whole

APPENDIX D

WRP CAF AND FLOOD EVALUATION WORKSHEET

FOR INTERNAL USE ONLY	WRP No. _____
Date Received: _____	DOS No. _____

NEW YORK CITY WATERFRONT REVITALIZATION PROGRAM
Consistency Assessment Form

Proposed actions that are subject to CEQR, ULURP or other local, state or federal discretionary review procedures, and that are within New York City's Coastal Zone, must be reviewed and assessed for their consistency with the *New York City Waterfront Revitalization Program (WRP)* which has been approved as part of the State's Coastal Management Program.

This form is intended to assist an applicant in certifying that the proposed activity is consistent with the WRP. It should be completed when the local, state, or federal application is prepared. The completed form and accompanying information will be used by the New York State Department of State, the New York City Department of City Planning, or other city or state agencies in their review of the applicant's certification of consistency.

A. APPLICANT INFORMATION

Name of Applicant: 33-33 11th St. LLC

Name of Applicant Representative: Equity Environmental Engineering

Address: 500 International Dr. Suite 150, Mount Olive NJ 07828

Telephone: 917-470-3077 Email: kira.xiang@equityenvironmental.com

Project site owner (if different than above): _____

B. PROPOSED ACTIVITY

If more space is needed, include as an attachment.

1. Brief description of activity

The Applicant, 33-33 11th St. LLC, is seeking the approval of a zoning map amendment and two zoning text amendments affecting all 5 lots within Block 318 located in Astoria Neighborhood, Queens Community District 1. The zoning map amendment would rezone Block 318, Lots 1, 9, 11, 15, and 22 from R5 zoning district to an M1-5/R6A zoning district. The zoning text amendments include modifying Zoning Resolution Article 12, Chapter 3 to establish MX district and to increase maximum permitted height to 95 feet and maximum base height to 75 feet, and modifying Appendix F, Queens CD 1 map to establish MIH Area.

2. Purpose of activity

The Proposed Project would replace the existing buildings on 33-33/33-51 11th Street (Block 318, Lots 15 and 22) and 33-80 12th Street (Block 318, Lot 1) with two mixed-use 8-story buildings, including a mixed commercial and residential building on Lots 15 and 22 and a mixed-use commercial, community facility, industrial/manufacturing, and residential building on Lot 1. The Proposed Project aims to help induce the development of underutilized lots as well as to provide permanently affordable housing units in align with the needs of city's affordable housing provision goals.

C. PROJECT LOCATION

Borough: Queens Tax Block/Lot(s): Block 318, Lots 1, 9, 11, 15, and 22

Street Address: 33-33/33-51/33-67/33-71 11th Street, 33-80 12th Street

Name of water body (if located on the waterfront): _____

D. REQUIRED ACTIONS OR APPROVALS

Check all that apply.

City Actions/Approvals/Funding

City Planning Commission ☑ Yes ☐ No

☐ City Map Amendment	☐ Zoning Certification	☐ Concession
☑ Zoning Map Amendment	☐ Zoning Authorizations	☐ UDAAP
☑ Zoning Text Amendment	☐ Acquisition – Real Property	☐ Revocable Consent
☐ Site Selection – Public Facility	☐ Disposition – Real Property	☐ Franchise
☐ Housing Plan & Project	☐ Other, explain: _____	
☐ Special Permit		

(if appropriate, specify type: ☐ Modification ☐ Renewal ☐ other) Expiration Date: _____

Board of Standards and Appeals ☐ Yes ☑ No

☐ Variance (use)
☐ Variance (bulk)
☐ Special Permit
(if appropriate, specify type: ☐ Modification ☐ Renewal ☐ other) Expiration Date: _____

Other City Approvals

☐ Legislation	☐ Funding for Construction, specify: _____
☐ Rulemaking	☐ Policy or Plan, specify: _____
☐ Construction of Public Facilities	☐ Funding of Program, specify: _____
☐ 384 (b) (4) Approval	☐ Permits, specify: _____
☐ Other, explain: _____	

State Actions/Approvals/Funding

☐ State permit or license, specify Agency: _____ Permit type and number: _____
☐ Funding for Construction, specify: _____
☐ Funding of a Program, specify: _____
☐ Other, explain: _____

Federal Actions/Approvals/Funding

☐ Federal permit or license, specify Agency: _____ Permit type and number: _____
☐ Funding for Construction, specify: _____
☐ Funding of a Program, specify: _____
☐ Other, explain: _____

Is this being reviewed in conjunction with a Joint Application for Permits? ☐ Yes ☑ No

E. LOCATION QUESTIONS

1. Does the project require a waterfront site? ☐ Yes ☑ No
2. Would the action result in a physical alteration to a waterfront site, including land along the shoreline, land under water or coastal waters? ☐ Yes ☑ No
3. Is the project located on publicly owned land or receiving public assistance? ☐ Yes ☑ No
4. Is the project located within a FEMA 1% annual chance floodplain? *(6.2)* ☑ Yes ☐ No
5. Is the project located within a FEMA 0.2% annual chance floodplain? *(6.2)* ☐ Yes ☑ No
6. Is the project located adjacent to or within a special area designation? *See Maps – Part III of the NYC WRP. If so, check appropriate boxes below and evaluate policies noted in parentheses as part of WRP Policy Assessment (Section F).* ☐ Yes ☑ No

   ☐ Significant Maritime and Industrial Area (SMIA) *(2.1)*
   ☐ Special Natural Waterfront Area (SNWA) *(4.1)*
   ☐ Priority Maritime Activity Zone (PMAZ) *(3.5)*
   ☐ Recognized Ecological Complex (REC) *(4.4)*
   ☐ West Shore Ecologically Sensitive Maritime and Industrial Area (ESMIA) *(2.2, 4.2)*

F. WRP POLICY ASSESSMENT

Review the project or action for consistency with the WRP policies. For each policy, check Promote, Hinder *or* Not Applicable (N/A). *For more information about consistency review process and determination, see* ***Part I*** *of the NYC Waterfront Revitalization Program. When assessing each policy, review the full policy language, including all sub-policies, contained within* ***Part II*** *of the WRP. The relevance of each applicable policy may vary depending upon the project type and where it is located (i.e. if it is located within one of the special area designations).*

For those policies checked Promote *or* Hinder, *provide a written statement on a separate page that assesses the effects of the proposed activity on the relevant policies or standards. If the project or action promotes a policy, explain how the action would be consistent with the goals of the policy. If it hinders a policy, consideration should be given toward any practical means of altering or modifying the project to eliminate the hindrance. Policies that would be advanced by the project should be balanced against those that would be hindered by the project. If reasonable modifications to eliminate the hindrance are not possible, consideration should be given as to whether the hindrance is of such a degree as to be substantial, and if so, those adverse effects should be mitigated to the extent practicable.*

		Promote	Hinder	N/A
1	**Support and facilitate commercial and residential redevelopment in areas well-suited to such development.**	☑	☐	☐
1.1	Encourage commercial and residential redevelopment in appropriate Coastal Zone areas.	☑	☐	☐
1.2	Encourage non-industrial development with uses and design features that enliven the waterfront and attract the public.	☐	☐	☑
1.3	Encourage redevelopment in the Coastal Zone where public facilities and infrastructure are adequate or will be developed.	☑	☐	☐
1.4	In areas adjacent to SMIAs, ensure new residential development maximizes compatibility with existing adjacent maritime and industrial uses.	☐	☐	☑
1.5	Integrate consideration of climate change and sea level rise into the planning and design of waterfront residential and commercial development, pursuant to WRP Policy 6.2.	☑	☐	☐

		Promote	Hinder	N/A
2	**Support water-dependent and industrial uses in New York City coastal areas that are well-suited to their continued operation.**	☐	☐	☑
2.1	Promote water-dependent and industrial uses in Significant Maritime and Industrial Areas.	☐	☐	☑
2.2	Encourage a compatible relationship between working waterfront uses, upland development and natural resources within the Ecologically Sensitive Maritime and Industrial Area.	☐	☐	☑
2.3	Encourage working waterfront uses at appropriate sites outside the Significant Maritime and Industrial Areas or Ecologically Sensitive Maritime Industrial Area.	☐	☐	☑
2.4	Provide infrastructure improvements necessary to support working waterfront uses.	☐	☐	☑
2.5	Incorporate consideration of climate change and sea level rise into the planning and design of waterfront industrial development and infrastructure, pursuant to WRP Policy 6.2.	☐	☐	☑
3	**Promote use of New York City's waterways for commercial and recreational boating and water-dependent transportation.**	☐	☐	☑
3.1.	Support and encourage in-water recreational activities in suitable locations.	☐	☐	☑
3.2	Support and encourage recreational, educational and commercial boating in New York City's maritime centers.	☐	☐	☑
3.3	Minimize conflicts between recreational boating and commercial ship operations.	☐	☐	☑
3.4	Minimize impact of commercial and recreational boating activities on the aquatic environment and surrounding land and water uses.	☐	☐	☑
3.5	In Priority Marine Activity Zones, support the ongoing maintenance of maritime infrastructure for water-dependent uses.	☐	☐	☑
4	**Protect and restore the quality and function of ecological systems within the New York City coastal area.**	☐	☐	☑
4.1	Protect and restore the ecological quality and component habitats and resources within the Special Natural Waterfront Areas.	☐	☐	☑
4.2	Protect and restore the ecological quality and component habitats and resources within the Ecologically Sensitive Maritime and Industrial Area.	☐	☐	☑
4.3	Protect designated Significant Coastal Fish and Wildlife Habitats.	☐	☐	☑
4.4	Identify, remediate and restore ecological functions within Recognized Ecological Complexes.	☐	☐	☑
4.5	Protect and restore tidal and freshwater wetlands.	☐	☐	☑
4.6	In addition to wetlands, seek opportunities to create a mosaic of habitats with high ecological value and function that provide environmental and societal benefits. Restoration should strive to incorporate multiple habitat characteristics to achieve the greatest ecological benefit at a single location.	☐	☐	☑
4.7	Protect vulnerable plant, fish and wildlife species, and rare ecological communities. Design and develop land and water uses to maximize their integration or compatibility with the identified ecological community.	☐	☐	☑
4.8	Maintain and protect living aquatic resources.	☐	☐	☑

		Promote	Hinder	N/A
5	**Protect and improve water quality in the New York City coastal area.**	☑	☐	☐
5.1	Manage direct or indirect discharges to waterbodies.	☑	☐	☐
5.2	Protect the quality of New York City's waters by managing activities that generate nonpoint source pollution.	☑	☐	☐
5.3	Protect water quality when excavating or placing fill in navigable waters and in or near marshes, estuaries, tidal marshes, and wetlands.	☐	☐	☑
5.4	Protect the quality and quantity of groundwater, streams, and the sources of water for wetlands.	☐	☐	☑
5.5	Protect and improve water quality through cost-effective grey-infrastructure and in-water ecological strategies.	☐	☐	☑
6	**Minimize loss of life, structures, infrastructure, and natural resources caused by flooding and erosion, and increase resilience to future conditions created by climate change.**	☑	☐	☐
6.1	Minimize losses from flooding and erosion by employing non-structural and structural management measures appropriate to the site, the use of the property to be protected, and the surrounding area.	☑	☐	☐
6.2	Integrate consideration of the latest New York City projections of climate change and sea level rise (as published in *New York City Panel on Climate Change 2015 Report, Chapter 2: Sea Level Rise and Coastal Storms*) into the planning and design of projects in the city's Coastal Zone.	☑	☐	☐
6.3	Direct public funding for flood prevention or erosion control measures to those locations where the investment will yield significant public benefit.	☐	☐	☑
6.4	Protect and preserve non-renewable sources of sand for beach nourishment.	☐	☐	☑
7	**Minimize environmental degradation and negative impacts on public health from solid waste, toxic pollutants, hazardous materials, and industrial materials that may pose risks to the environment and public health and safety.**	☐	☐	☑
7.1	Manage solid waste material, hazardous wastes, toxic pollutants, substances hazardous to the environment, and the unenclosed storage of industrial materials to protect public health, control pollution and prevent degradation of coastal ecosystems.	☐	☐	☑
7.2	Prevent and remediate discharge of petroleum products.	☐	☐	☑
7.3	Transport solid waste and hazardous materials and site solid and hazardous waste facilities in a manner that minimizes potential degradation of coastal resources.	☐	☐	☑
8	**Provide public access to, from, and along New York City's coastal waters.**	☐	☐	☑
8.1	Preserve, protect, maintain, and enhance physical, visual and recreational access to the waterfront.	☐	☐	☑
8.2	Incorporate public access into new public and private development where compatible with proposed land use and coastal location.	☐	☐	☑
8.3	Provide visual access to the waterfront where physically practical.	☐	☐	☑
8.4	Preserve and develop waterfront open space and recreation on publicly owned land at suitable locations.	☐	☐	☑

		Promote	Hinder	N/A
8.5	Preserve the public interest in and use of lands and waters held in public trust by the State and City.	☐	☐	☑
8.6	Design waterfront public spaces to encourage the waterfront's identity and encourage stewardship.	☐	☐	☑
9	**Protect scenic resources that contribute to the visual quality of the New York City coastal area.**	☐	☐	☑
9.1	Protect and improve visual quality associated with New York City's urban context and the historic and working waterfront.	☐	☐	☑
9.2	Protect and enhance scenic values associated with natural resources.	☐	☐	☑
10	**Protect, preserve, and enhance resources significant to the historical, archaeological, architectural, and cultural legacy of the New York City coastal area.**	☐	☐	☑
10.1	Retain and preserve historic resources, and enhance resources significant to the coastal culture of New York City.	☐	☐	☑
10.2	Protect and preserve archaeological resources and artifacts.	☐	☐	☑

G. CERTIFICATION

The applicant or agent must certify that the proposed activity is consistent with New York City's approved Local Waterfront Revitalization Program, pursuant to New York State's Coastal Management Program. If this certification cannot be made, the proposed activity shall not be undertaken. If this certification can be made, complete this Section.

"The proposed activity complies with New York State's approved Coastal Management Program as expressed in New York City's approved Local Waterfront Revitalization Program, pursuant to New York State's Coastal Management Program, and will be conducted in a manner consistent with such program."

Applicant/Agent's Name: Equity Environmental Engineering

Address: 500 International Dr, Suite 150 Mount Olive NJ 07828

Telephone: 917-470-3077 Email: kira.xiang@equityenvironmental.com

Applicant/Agent's Signature: Kira Xiang Digitally signed by Kira Xiang Date: 2020.07.07 23:56:20 -04'00'

Date: 7/7/20

Submission Requirements

For all actions requiring City Planning Commission approval, materials should be submitted to the Department of City Planning.

For local actions not requiring City Planning Commission review, the applicant or agent shall submit materials to the Lead Agency responsible for environmental review. A copy should also be sent to the Department of City Planning.

For State actions or funding, the Lead Agency responsible for environmental review should transmit its WRP consistency assessment to the Department of City Planning.

For Federal direct actions, funding, or permits applications, including Joint Applicants for Permits, the applicant or agent shall also submit a copy of this completed form along with his/her application to the NYS Department of State Office of Planning and Development and other relevant state and federal agencies. A copy of the application should be provided to the NYC Department of City Planning.

The Department of City Planning is also available for consultation and advisement regarding WRP consistency procedural matters.

New York City Department of City Planning
Waterfront and Open Space Division
120 Broadway, 31st Floor
New York, New York 10271
212-720-3696
wrp@planning.nyc.gov
www.nyc.gov/wrp

New York State Department of State
Office of Planning and Development
Suite 1010
One Commerce Place, 99 Washington Avenue
Albany, New York 12231-0001
518-474-6000
www.dos.ny.gov/opd/programs/consistency

Applicant Checklist

- ☐ Copy of original signed NYC Consistency Assessment Form
- ☐ Attachment with consistency assessment statements for all relevant policies
- ☐ For Joint Applications for Permits, one (1) copy of the complete application package
- ☐ Environmental Review documents
- ☐ Drawings (plans, sections, elevations), surveys, photographs, maps, or other information or materials which would support the certification of consistency and are not included in other documents submitted. All drawings should be clearly labeled and at a scale that is legible.
- ☐ Policy 6.2 Flood Elevation worksheet, if applicable. For guidance on applicability, refer to the WRP Policy 6.2 Guidance document available at www.nyc.gov/wrp

NYC Waterfront Revitalization Program - Policy 6.2 Flood Elevation Workhsheet

COMPLETE INSTRUCTIONS ON HOW TO USE THIS WORKSHEET ARE PROVIDED IN THE "CLIMATE CHANGE ADAPTATION GUIDANCE" DOCUMENT AVAILABLE AT www.nyc.gov/wrp

Enter information about the project and site in highlighted cells in Tabs 1-3. Tab 4, "Summary Charts" contains primary results. Tab 5, "0.2%+SLR" produces charts to be used for critical infrastructure or facilities. Tab 6, "Calculations" contains background computations. Appendix A contains tide elevations for station across the city to be used for the elevation of MHHW if a site survey is not available. Non-highlighted cells have been locked.

Background Information	
Project Name	33-33 11th Street Rezoning
Location	33-33/33-51/33-67/33-71 11th Street, 33-80 12th Street, Queens NY
Type(s)	☑ Residential, Commercial, Community Facility ☐ Parkland, Open Space, and Natural Areas ☐ Tidal Wetland Restoration ☐ Critical Infrastructure or Facility ☑ Industrial Uses ☐ Over-water Structures ☐ Shoreline Structures ☐ Transportation ☐ Wastewater Treatment/Drainage ☐ Coastal Protection
Description	The Proposed Action involves a zoning map amendment and two zoning text amendments affecting all 5 lots within Block 318 located in Astoria Neighborhood, Queens Community District 1. The zoning map amendment would rezone Block 318, Lots 1, 9, 11, 15, and 22 from R5 zoning district to an M1-5/R6A zoning district. The zoning text amendments include modifying Zoning Resolution Article 12, Chapter 3 to establish MX district and to increase maximum permitted height to 95 feet and maximum base height to 75 feet, and modifying Appendix F, Queens CD 1 map to establish MIH Area.The Proposed Action would replace the existing buildings on Block 318, Lots 15/ 22 and Lot 1 with two mixed-use 9-story buildings.
Planned Completion Date	2024
Expected Project Lifespan	99 years

The New York City Waterfront Revitalization Program Climate Change Adaptation Guidance document was developed by the NYC Department of City Planning. It is a guidance document only and is not intended to serve as a substitute for actual regulations. The City disclaims any liability for errors that may be contained herein and shall not be responsible for any damages, consequential or actual, arising out of or in connection with the use of this information. The City reserves the right to update or correct information in this guidance document at any time and without notice.

For technical assistance on using this worksheet, email wrp@planning.nyc.gov, using the message subject "Policy 6.2 Worksheet."

Last update: Sept. 7, 2018

Establish current tidal and flood heights.

	FT (NAVD88)	Feet	Datum	Source
MHHW	2.87	**2.87**	**NAVD88**	*Horns Hook Station (Adjusted)*
1% flood height	12.00	**12.00**	**NAVD88**	*FEMA 2015 PFIRMS*
Design flood elevation	13.00	**13.00**	**NAVD88**	*BFE +1*
As relevant:				
0.2% flood height	-->			

Data will be converted based on the following datums:

Datum	FT (NAVD88)
NAVD88	*0.00*
NGVD29	*-1.10*
Manhattan Datum	*1.65*
Bronx Datum	*1.51*
Brooklyn Datum (Sewer)	*0.61*
Brooklyn Datum (Highway)	*1.45*
Queens Datum	*1.63*
Richmond Datum	*2.09*

Describe key physical features of the project.

Feature *(enter name)*	Feature Category	Lifespan	Elevation	Units	Datum	Ft	Ft Above NAVD88	Ft Above MHHW	Ft Above 0.2% flood height
Cellar	☑ Vulnerable ☑ Critical ☐ Potentially Hazardous ☐ Other		2.2	Feet	NAVD88	*2.2*	*2.2*	*-0.7*	*#VALUE!*
Parking Spaces, Storage Space, Electrical Utilities, Gas Meter Room, Telecom Room, Building Mechanicals - Dry-Floodproofed									
First Floor Building Space	☑ Vulnerable ☐ Critical ☐ Potentially Hazardous ☐ Other		12.2	Feet	NAVD88	*12.2*	*12.2*	*9.3*	*#VALUE!*
Residential Lobby, Retail Space, Trade School, Electrical Utilities									
Second Floor Building Space	☑ Vulnerable ☐ Critical ☐ Potentially Hazardous ☐ Other		32.2	Feet	NAVD88	*32.2*	*32.2*	*29.3*	*#VALUE!*
Office Space, Community Facility Space, Electrical Utilities									
	☐ Vulnerable ☐ Critical ☐ Potentially Hazardous ☐ Other			Feet	NAVD88				
Description of Planned Uses and Materials									
E	☐ Vulnerable ☐ Critical ☐ Potentially Hazardous ☐ Other			Feet	NAVD88				
Description of Planned Uses and Materials									
F	☐ Vulnerable ☐ Critical ☐ Potentially Hazardous ☐ Other			Feet	NAVD88				
Description of Planned Uses and Materials									
G	☐ Vulnerable ☐ Critical ☐ Potentially Hazardous ☐ Other			Feet	NAVD88				
Description of Planned Uses and Materials									
H	☐ Vulnerable ☐ Critical ☑ Potentially Hazardous ☐ Other			Feet	NAVD88				
Description of Planned Uses and Materials									

Assess project vulnerability over a range of sea level rise projections.

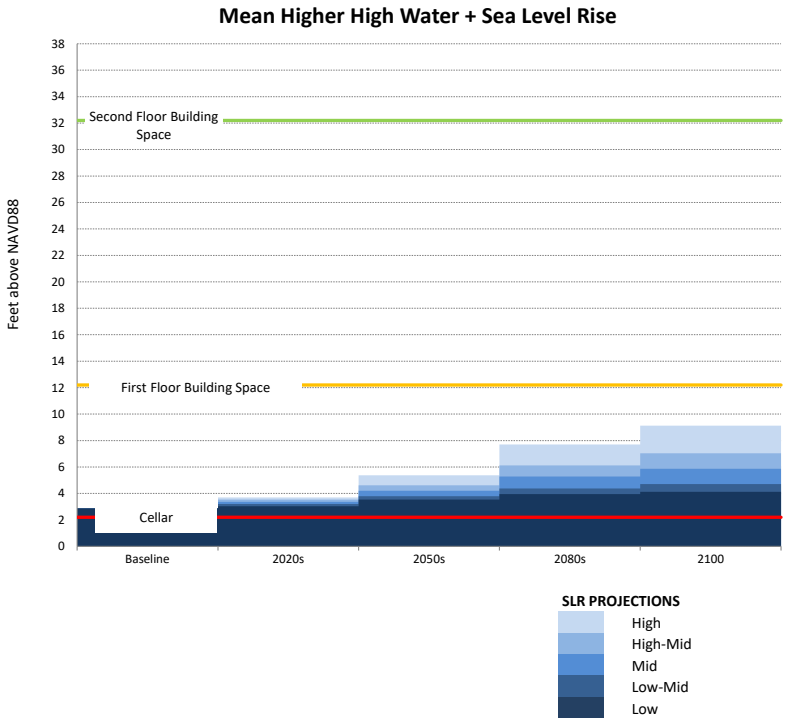

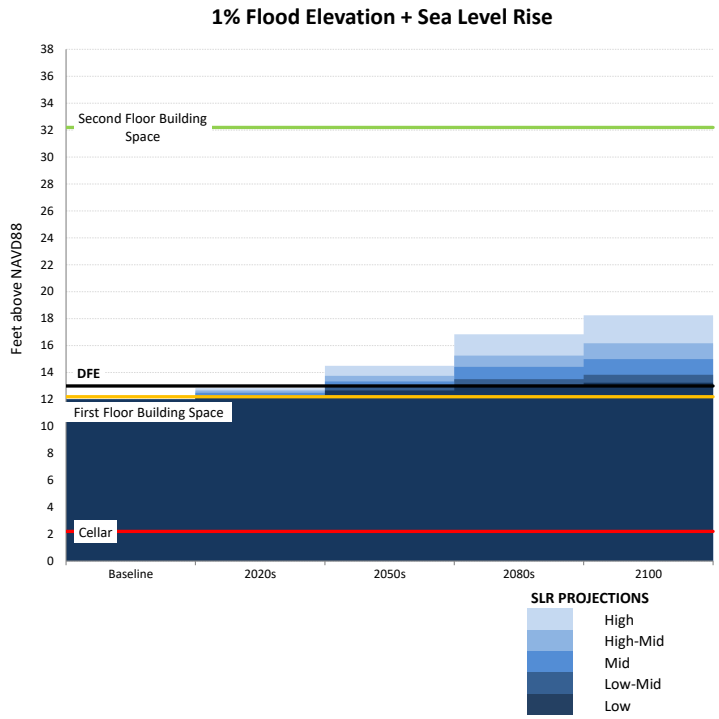

APPENDIX E

TRANSPORTATION

49-12 31ST PLACE, LONG ISLAND CITY, NY 11101 | INFO@ANDROMEDAINITIATIVE.ORG

Re: Andromeda Community Initiative
Supporting Documentation for Classes

September 3, 2021

To NYC Department of City Planning:

At the request of CPEngineering, P.C. (CPE) and Equity Environmental Engineering (Equity), Andromeda Community Initiative (ACI) is providing supporting data to validate the classroom operations and student headcounts throughout the calendar year.

The data presented is based on ACI's historical operations and can be relied upon as a model for the future buildout at 33-33 11th Street, Queens, NY.

ACI Program details are as follows:

1. Classes operate Monday-Friday.
2. 25 Students per class on average.
3. On some occasions, classes do overlap such that 50 people can be in session at one time.
4. Non-affiliated uses do occupy the ACI space when not in use by ACI, with as many as 50 people present for classroom training.
5. Classes run for 5-7 weeks, with a cycle of 7-10 class programs per year.
6. 2020 enrollment was approximately 200 students.
7. Students arrive between 8 AM and 830, and leave between 4 and 430 PM.
8. Four (4) Staff cover the ACI program- Trainer, Program Associate, Executive Direction and a Director of Business Development to assist with job placement.
9. Total square footage of the ACI operation is 20,000 square feet. Approximately 15,000 SF of this space is dedicated to the hands on training, 5,000 SF is the classroom space.

Thank you,



David Nidus
Executive Director

- Service Numbers:

    - The chart below indicates service numbers for ACI's recently ended fiscal year (10/1/19-9/30/20).
    - In general, in a regular year, existing staff allows for 8 MRP cycles of training, each of which can support 20-25 individuals, for a new enrollment number between 160-200 individuals.
    - More individuals could be served with additional staffing resources or consultants as resources allow.
    - In addition, since ACI offers a year of job placement support coupled with replacement support and job retention services, multiple clients seeking job support are consistently before the organization. (in a typical service year the number supported by MRP is approximately two times the number of new enrollees, representing the prior year clients receiving support).
    - Beyond this, ACI services other clients through its online offerings, access to a licensed apprenticeship program, and contextualized ESOL. Additional resources, staff and consultant support would allow for further cohorts of training to be supported.

Data on FY 2020 [October 1, 2019 to September 30, 2020]	
Total Served (All Programming)	258
Number of Individuals Enrolled in Masonry Restoration Program during 10/1/19 FY	81
Number of Individuals Completing Masonry Restoration Program during 10/1/19 FY	66
Number of Individuals Placed from Masonry Restoration Program during 10/1/19 FY REGARDLESS OF THEIR TRAINING YEAR (i.e. all placements)	48 (placement in progress @ over 72% of graduates – Cycles have just ended and placement is ongoing)
Number eligible for ongoing career support (counseling, replacement, etc) in 10/1/19 FY	147
Average highest salary achieved for Masonry Restoration Program placed in 10/1/19 FY (regardless of training year)	$19.57
Highest placement rate for any single Cohort trained in FY (indicate cohort and rate)	87.5% Cohort 5 – (14 out of 16 individuals)
OSHA/SST	In addition to Masonry Restoration Program, in FY 2020, due to Covid-19 and our inability to deliver in person training for a number of months, ACI offered online training. 46 individuals enrolled and 32 completed (online) OSHA/SST (Site Safety Training).
Construction Contextualized ESOL	40 participants; 6 week training [Advanced and Beginners Class]
Merit Apprenticeship	One cycle of Two week NYS Approved Apprenticeship Programming Hosted for approximately 10 individuals developing skills in

	construction. (In conjunction with Merit Apprenticeship Alliance)

- A note on the Pandemic:
    - Like most organizations, ACI has been stung by the pandemic and has had to modify its plans. These modified plans are reflected within the service numbers above. We have faced shutdowns, the need to modify space utilization for small group rotations and social distancing, and many traditional Nonprofit partners, who typically provide both financial resources and participants, far less able to be engaged. While we have delivered some services online (as indicated in the numbers), our participants are far more suited for hands on and in person work and not all providers are willing to engage us for such an offering.
    - ACI has spent significant time engaging and outreaching to new partners to expand its pool of available clients. In addition, we have made significant contacts with City agencies which should allow both increase client flow in this difficult in between period and us to be well situated as the vaccine is implemented. In particular the City is proceeding with plans to make ACI the site for voucher based trainings provided by DHS/HRA.
- Potential Expansion Within Existing Facilities
    - Presently under discussion is the notion of expanded training within ACI's existing facilities.
    - ACI may benefit from either:
        - A planned remodeling of the existing training area that will expand the useful training footprint with more classrooms and hands on areas and/or
        - Sequenced use of the present classroom and hands on areas that will allow for the simultaneous service of multiple groups.

Attachment: 5 week Schedule/MRP Training Curriculum

5 Week Schedule (Adjust for Holidays)

2021	WEEK 1				
8:00-11:50	Welcome & Orientation	OSHA 30**	OSHA 30**	OSHA 30**	OSHA 30**
11:50 -12:30	*Lunch*	*Lunch*	*Lunch*	*Lunch*	*Lunch*
12:30 - 5:00	Individual Social Service Time	OSHA 30**	OSHA 30**	OSHA 30**	OSHA 30**
	WEEK 2				
8:00-11:50	[Hands-On] Bricks Presentation	[Hands-On] Waterproofing Presentation	[Hands-On] Patching Presentation	4-hour Supported Scaffold**	[Hands-On] Supported Scaffold
11:50-12:30	*Lunch*	*Lunch*	*Lunch*	*Lunch*	*Lunch*
12:30-5:00	[Hands-On] Bricks	[Hands-On] Waterproofing	[Hands-On] Patching Presentation	Hands On Supported Scaffold **	Individual Social Service Time
	WEEK 3				
8:00-11:50	[Hands-On] Caulking & Stucco	16-hour Suspended Scaffold**	16-hour Suspended Scaffold**	[Hands-On] All Skills Practice	[Hands-On] All Skills Practice
11:50-12:30	*Lunch*	*Lunch*	*Lunch*	*Lunch*	*Lunch*
12:30-5:00	[Hands-On] Caulking & Stucco	16-hour Suspended Scaffold**	16-hour Suspended Scaffold**	[Hands-On] All Skills Practice	Individual Social Service Time
	WEEK 4				
8:00-11:50	[Hands-On] All Skills Practice	[Hands-On] All Skills Practice	Fall Prevention Hazard Awareness Training **	[Hands-On] All Skills Practice	[Hands-On] All Skills Practice
11:50-12:30	*Lunch*	*Lunch*	*Lunch*	*Lunch*	*Lunch*
12:30-5:00	[Hands-On] All Skills Practice	[Hands-On] All Skills Practice	Fall Prevention Hazard Awareness Training Drug and Alcohol Awareness Training **	[Hands-On] All Skills Practice	Individual Social Service Time
	WEEK 5				
8:00-11:50	Respirable Crystalline Silica Training [Fit Test included] **	[Hands-On] All Skills Practice	[Hands-On] All Skills Practice	[Hands-On] All Skills Practice	Graduation & Employment Next Steps
11:50-12:30	*Lunch*	*Lunch*	*Lunch*	*Lunch*	
12:30-5:00	[Hands-On] All Skills Practice	[Hands-On] All Skills Practice	[Hands-On] All Skills Practice	[Hands-On] All Skills Practice	

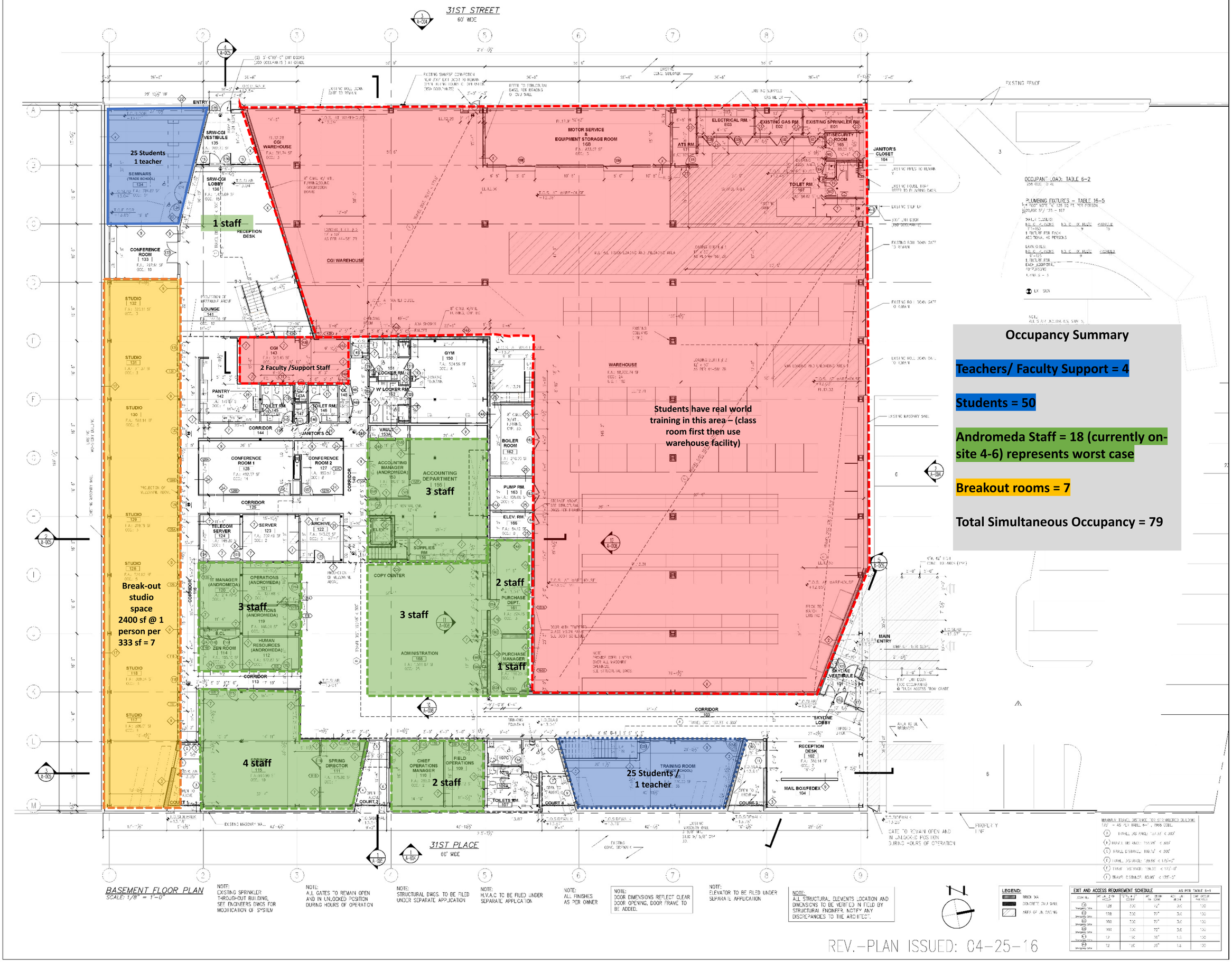

Occupancy Summary

Teachers/ Faculty Support = 4

Students = 50

Andromeda Staff = 18 (currently on-site 4-6) represents worst case

Breakout rooms = 7

Total Simultaneous Occupancy = 79

BASEMENT FLOOR PLAN
SCALE: 1/8" = 1'-0"

NOTE: EXISTING SPRINKLER THROUGHOUT BUILDING. SEE ENGINEERS DWGS FOR MODIFICATION OF SYSTEM

NOTE: ALL GATES TO REMAIN OPEN AND IN UNLOCKED POSITION DURING HOURS OF OPERATION

NOTE: STRUCTURAL DWGS. TO BE FILED UNDER SEPARATE APPLICATION

NOTE: H.V.A.C TO BE FILED UNDER SEPARATE APPLICATION

NOTE: ALL FINISHES AS PER OWNER

NOTE: DOOR DIMENSIONS REFLECT CLEAR DOOR OPENING, DOOR FRAME TO BE ADDED.

NOTE: ELEVATOR TO BE FILED UNDER SEPARATE APPLICATION

NOTE: ALL STRUCTURAL ELEMENTS LOCATION AND DIMENSIONS TO BE VERIFIED IN FIELD BY STRUCTURAL ENGINEER. NOTIFY ANY DISCREPANCIES TO THE ARCHITECT.

LEGEND: BRICK VIA; CONCRETE OR CMU WALL; AREA OF JOB CARING

EXIT AND ACCESS REQUIREMENT SCHEDULE — AS PER TABLE 5-1						
ROOM NO.	AREA	OCC. LOAD	OCC. LOAD PER	EGRESS WIDTH	ACTUAL WIDTH	EXIT ACCESS TRAVEL
(129) Emergency Exits	128	330	72"	3.0	150	
(8) Emergency Exits	128	330	72"	3.0	150	
(30) Emergency Exits	1003	330	72"	3.0	150	
(30) Emergency Exits	1003	330	72"	3.0	150	
(A) Emergency Exits	12	100	36"	1.0	100	
(A) Emergency Exits	12	100	36"	1.0	100	

REV.-PLAN ISSUED: 04-25-16

Gerald J. Caliendo, R.A., A.I.A.
Architect, P.C.
Architecture
Interior Design
Code Consultant
Building Dept. Expediting
138-72 Queens Boulevard
Briarwood N.Y. 11435
Tel. (718) 268-9098
Fax (718) 268-9097
www.caliendoarchitects.com

CONSULTANTS:
Eleni Takou
Practical Design & Engineering PLLC
1 Cambridge Street
Roslyn Heights, NY 11577
Sideris Kefalas Engineers P.C.
217-22 Northern Blvd.
Bayside, NY 11361

OWNER: SKYLINE RESTORATION & WATERPROOFING, INC
Astoria, Queens

KEY PLAN:

DRAWING TITLE: BASEMENT CONSTRUCTION PLAN

PREMISES: SKYLINE 49-29 31ST STREET Long Island City, Queens

DRAWN BY:	CHECKED BY:	JOB NO.:	SCALE:	DATE:
MC/ORR	GJC	14043	AS NOTED	09/29/14

NO.	DATE	REVISION
A	10/27/16	PLANS AMENDED

SEAL:

DRAWING No.: 6 OF

A001.01

THE ARCHITECT SHALL NOT HAVE CONTROL OF, CHARGE OF AND SHALL NOT BE RESPONSIBLE FOR CONSTRUCTION MEANS, METHODS, TECHNIQUES, SEQUENCES OR PROCEDURES, OR FOR SAFETY PRECAUTIONS AND PROGRAMS IN CONNECTION WITH THE WORK, FOR THE ACTS OR OMISSIONS OF THE CONTRACTOR, SUBCONTRACTORS OR ANY OTHER PERSONS PERFORMING ANY OF THE WORK, OR FOR THE FAILURE OF THEM TO CARRY OUT THE WORK IN ACCORDANCE WITH THE CONTRACT DOCUMENTS. ALWAYS USE DIMENSIONS AS SHOWN. DRAWINGS ARE NOT TO BE SCALED.

Weekday AM - Site 1
Inbound

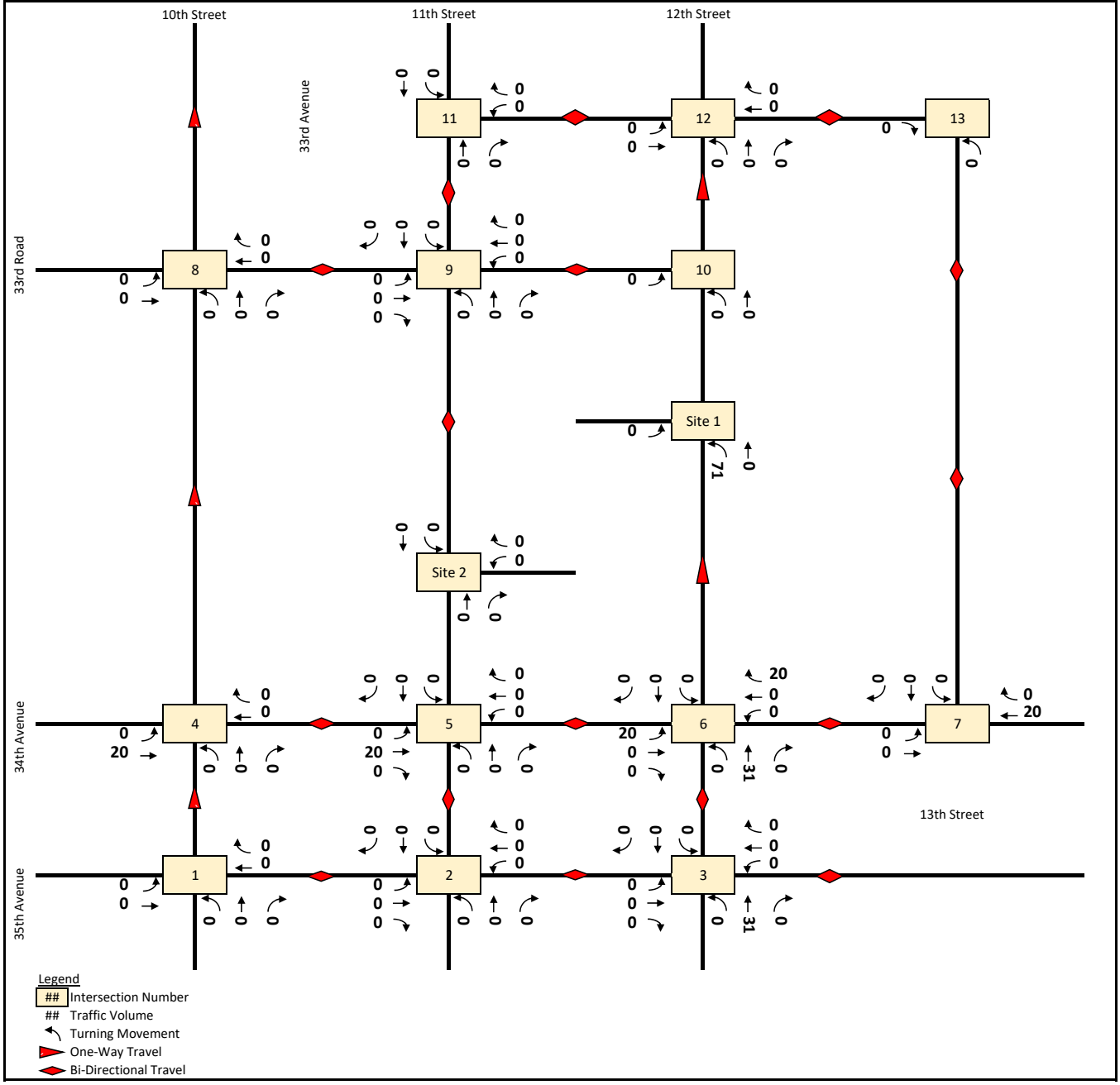

Weekday AM - Site 1
Outbound

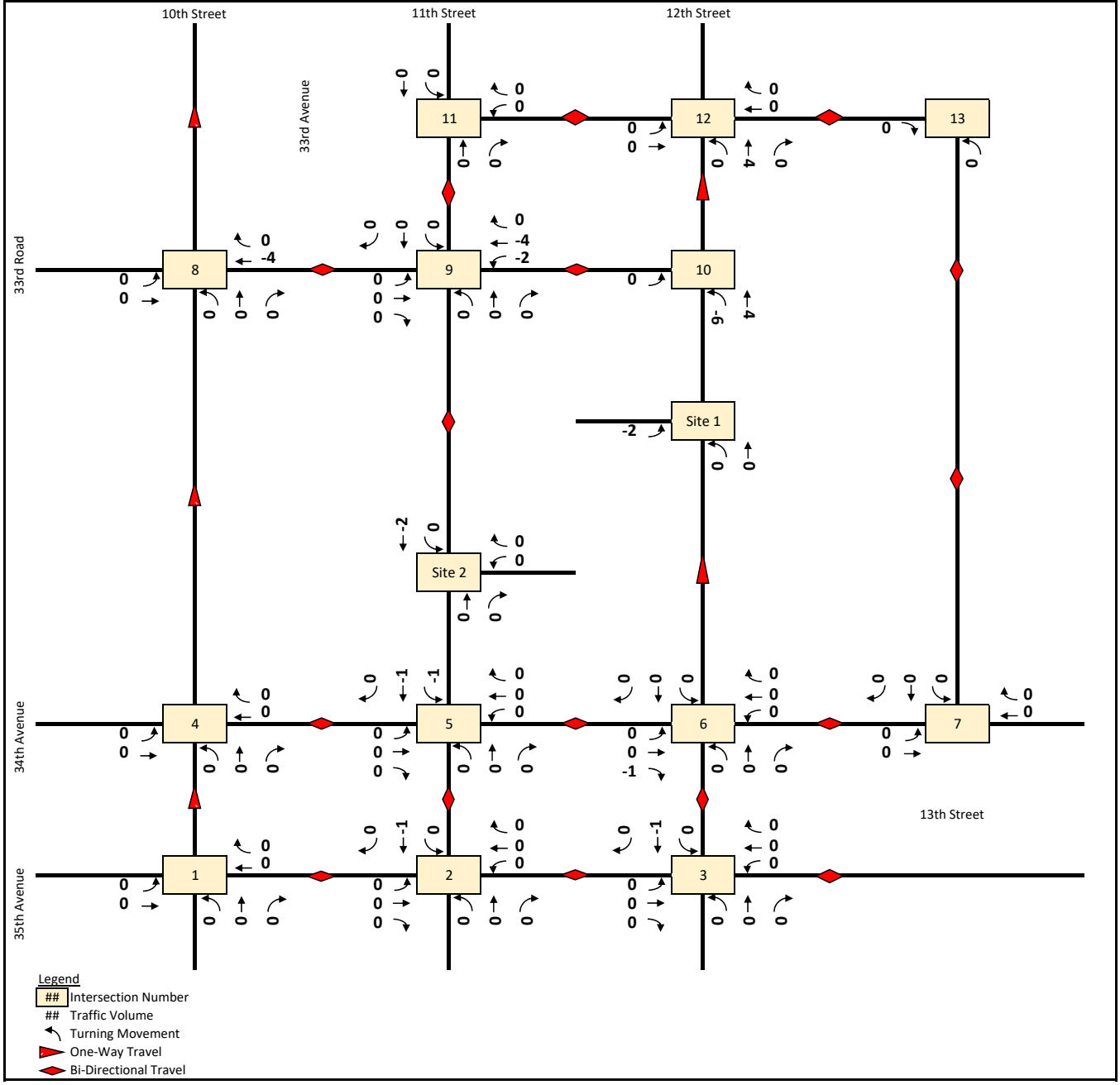

Weekday AM - Site 1
Total

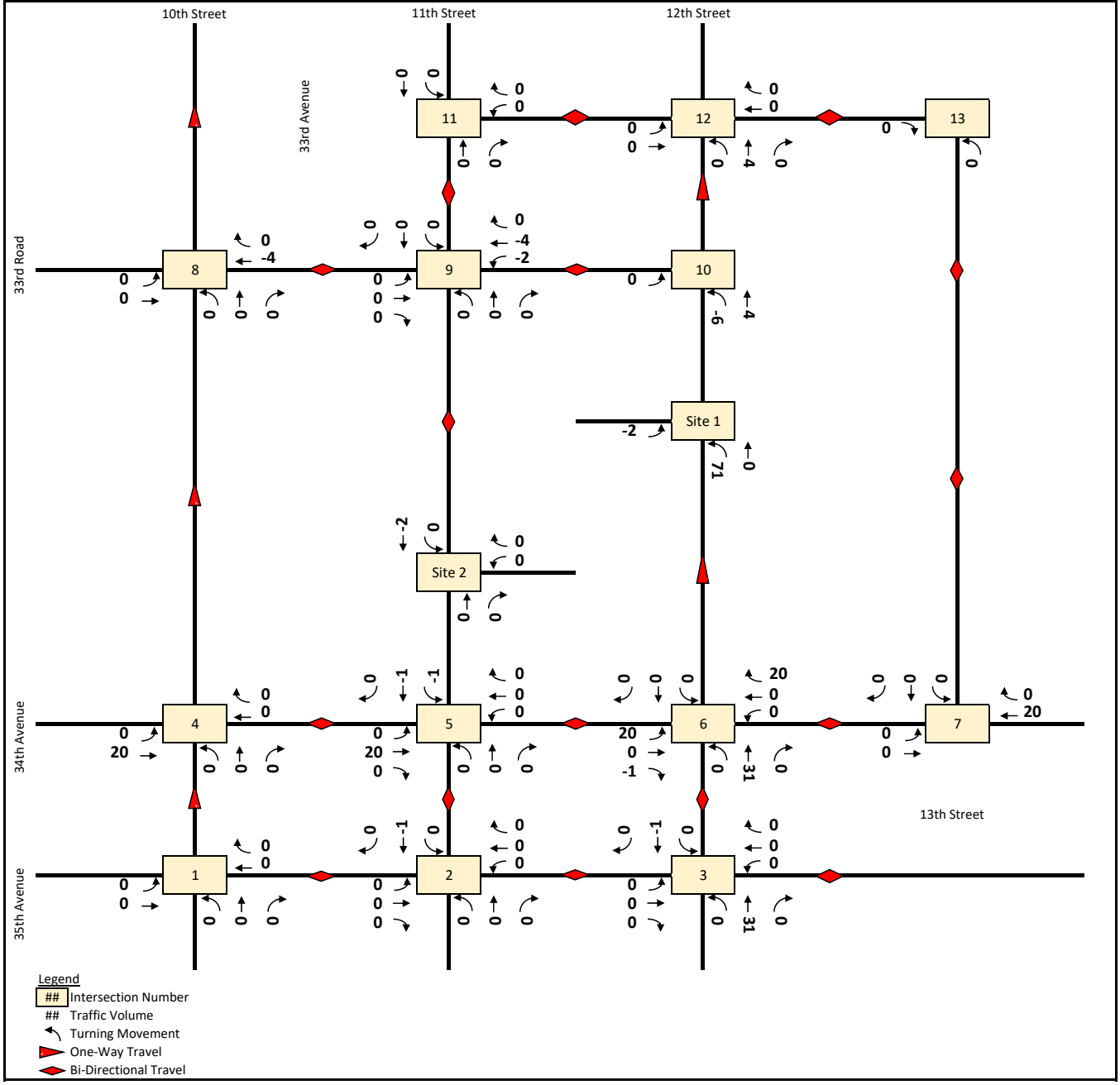

Weekday AM - Site 2
Inbound

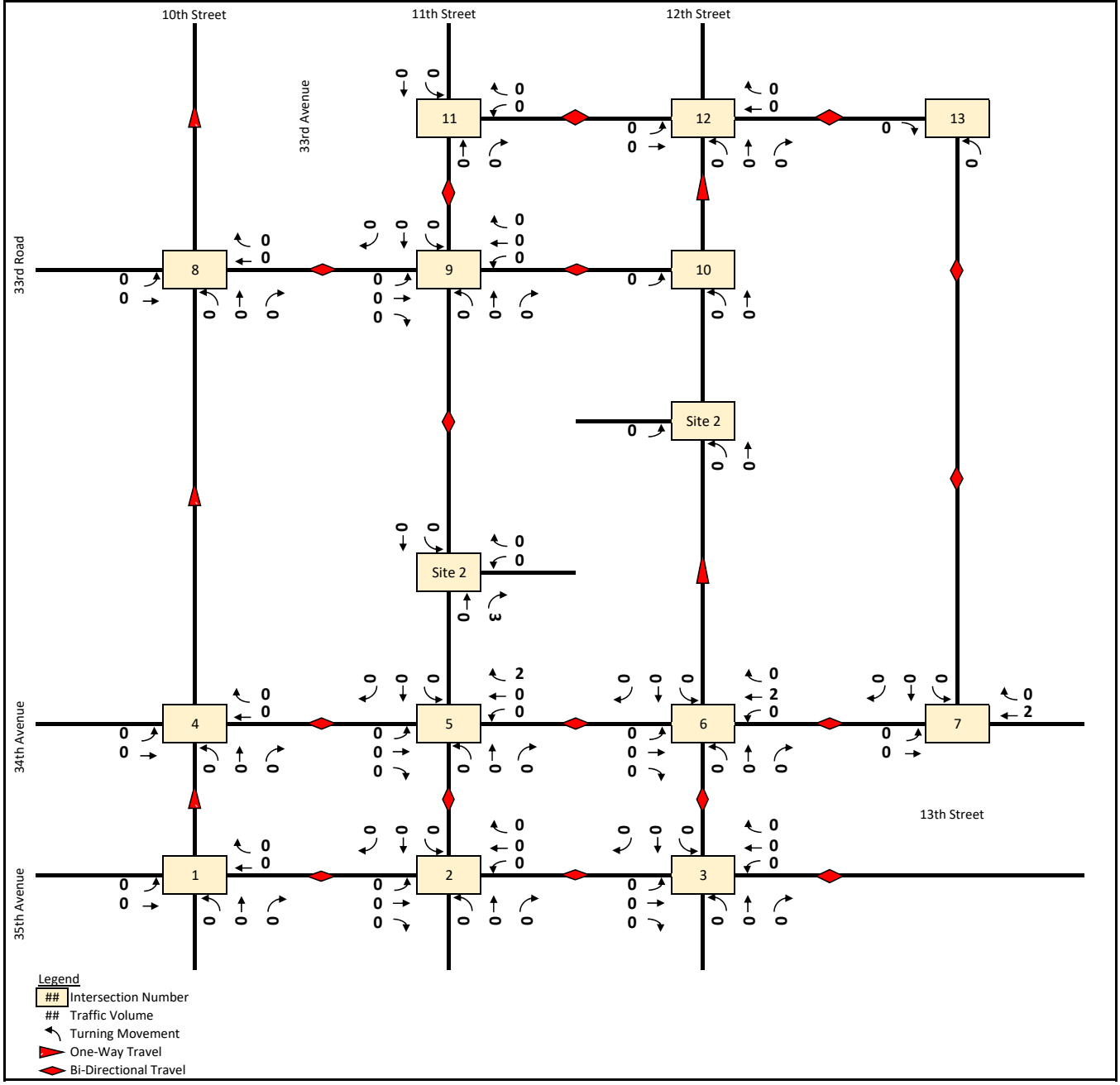

Weekday AM - Site 2
Outbound

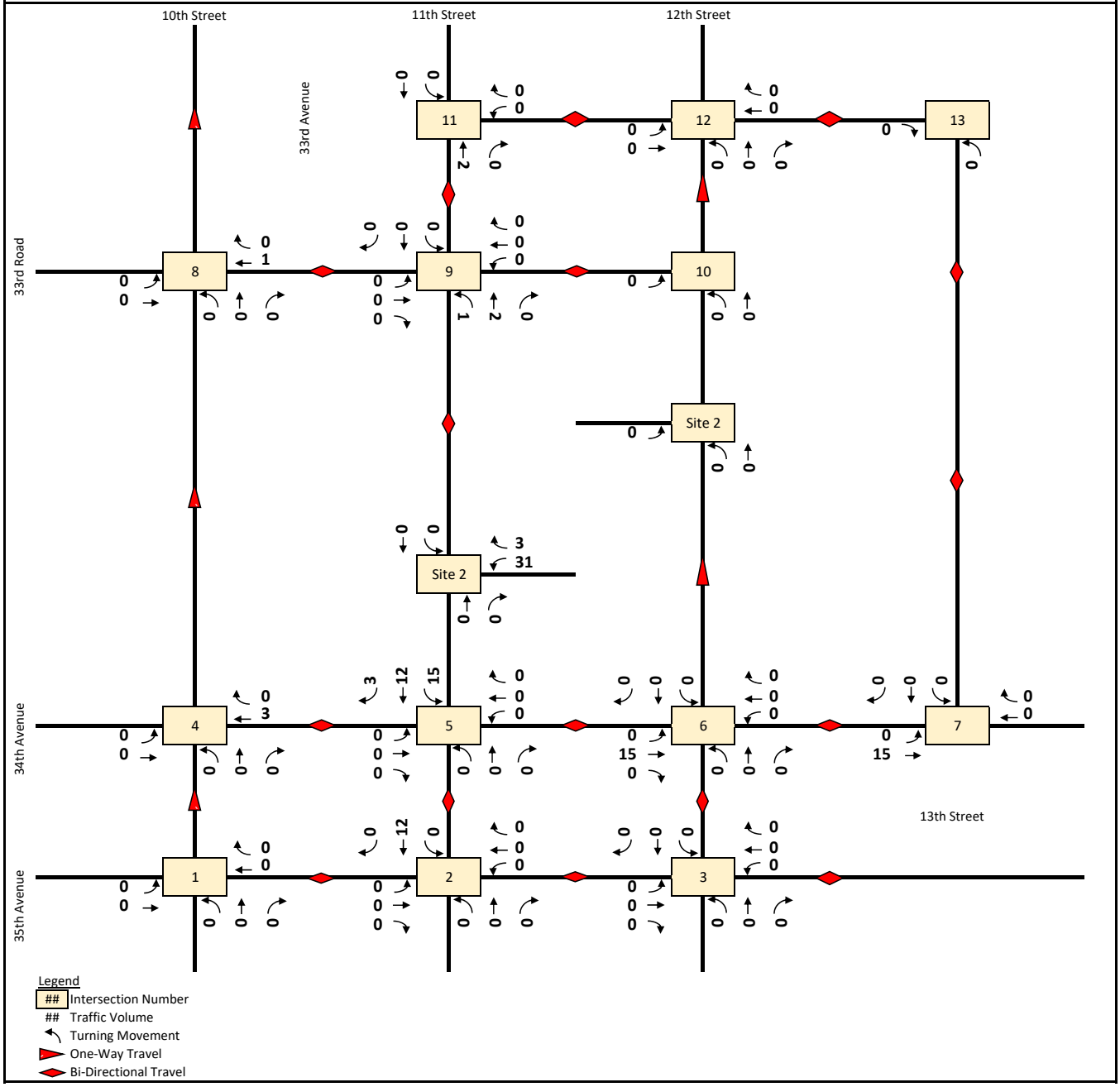

Weekday AM - Site 2
Total

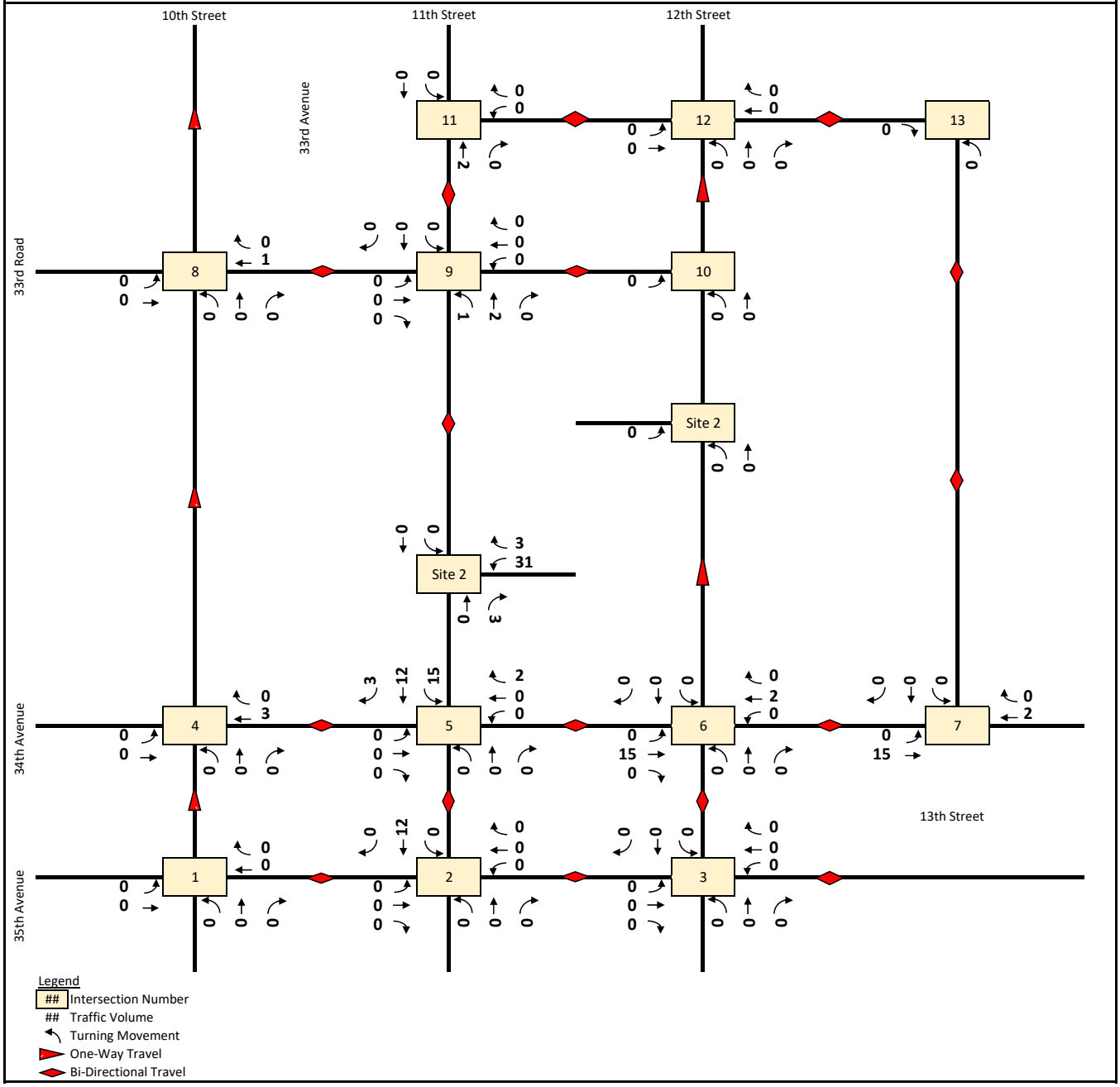

Weekday AM - Total
Inbound

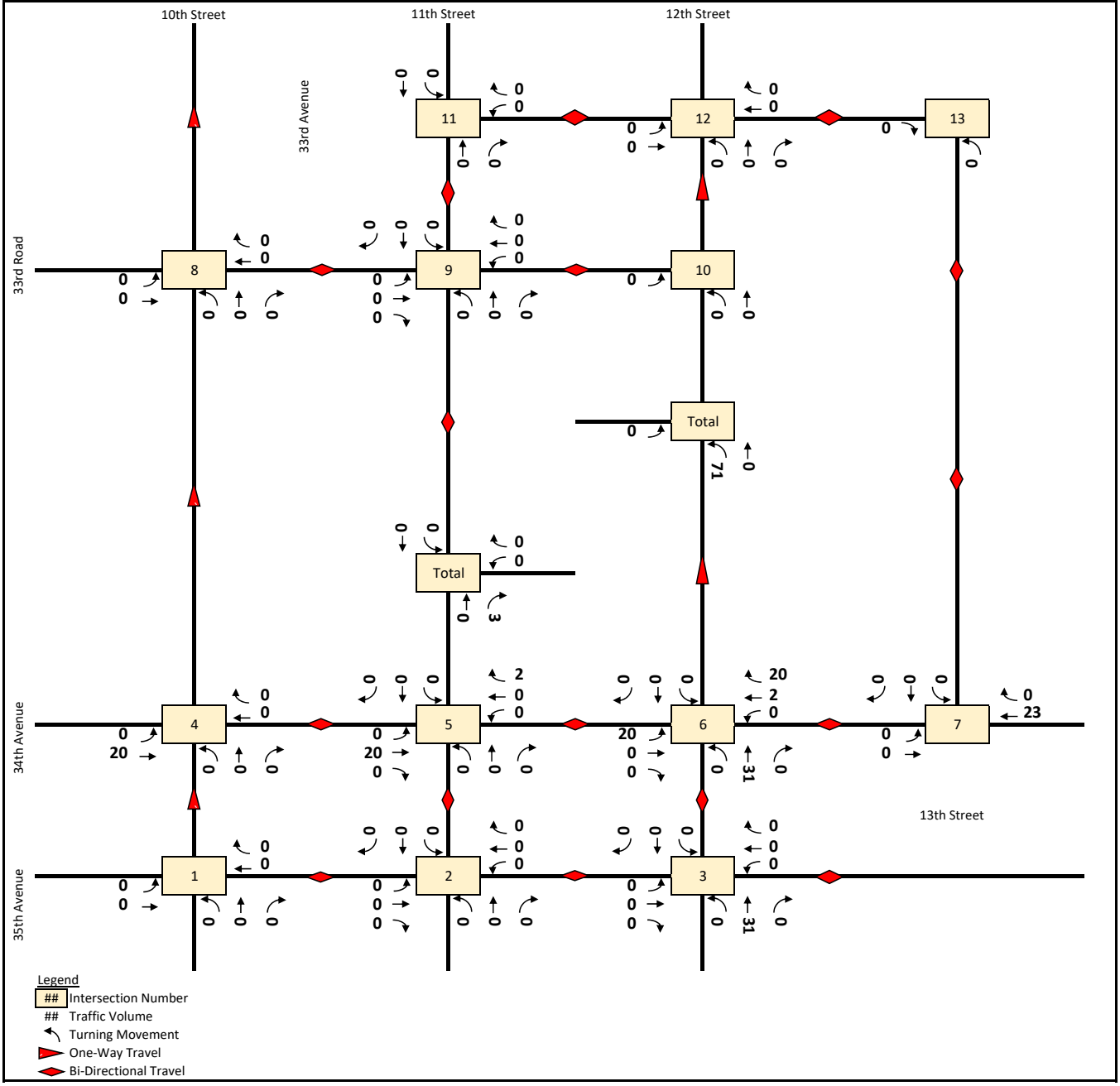

Weekday AM - Total
Outbound

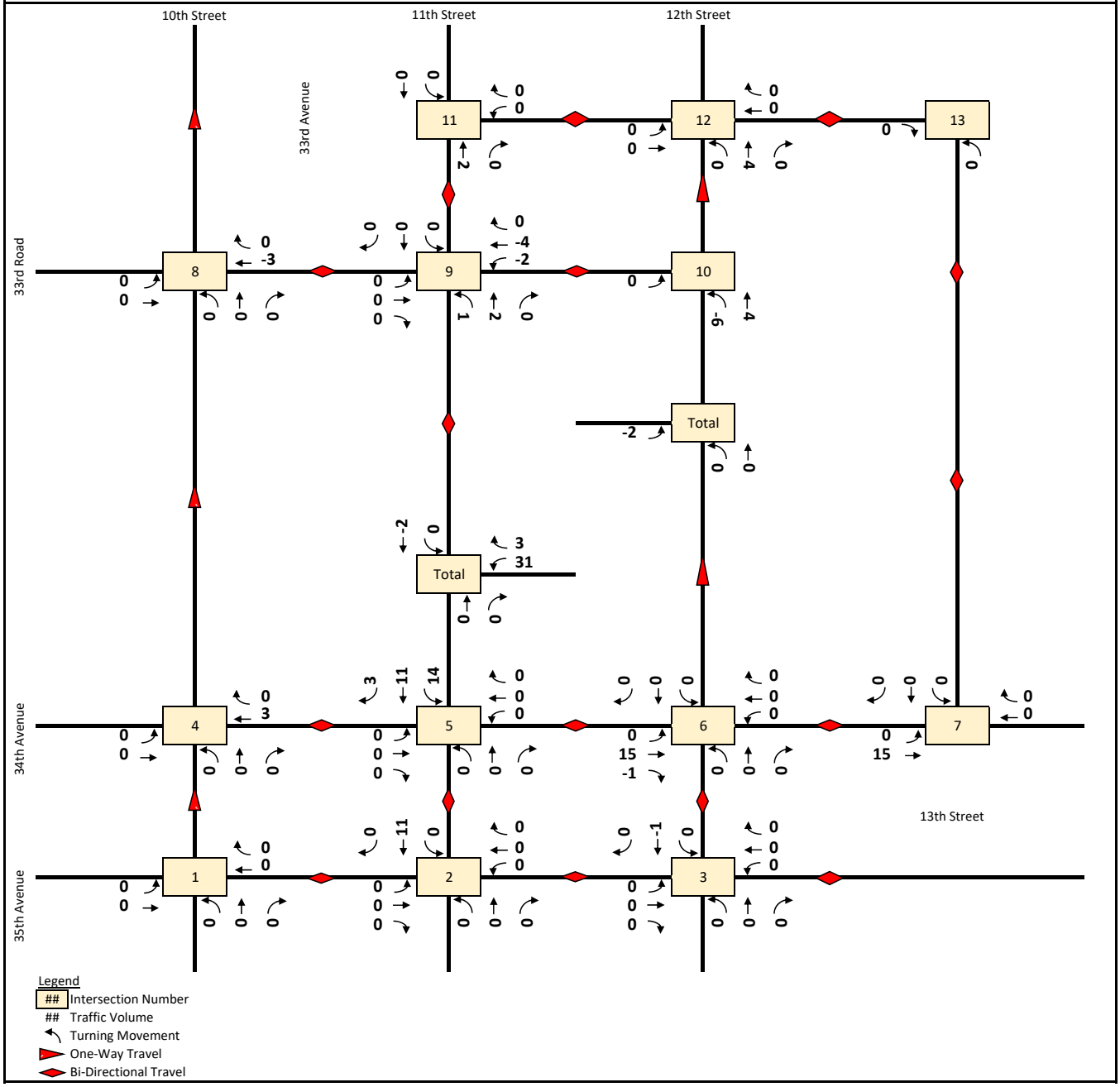

Weekday AM - Total
Total

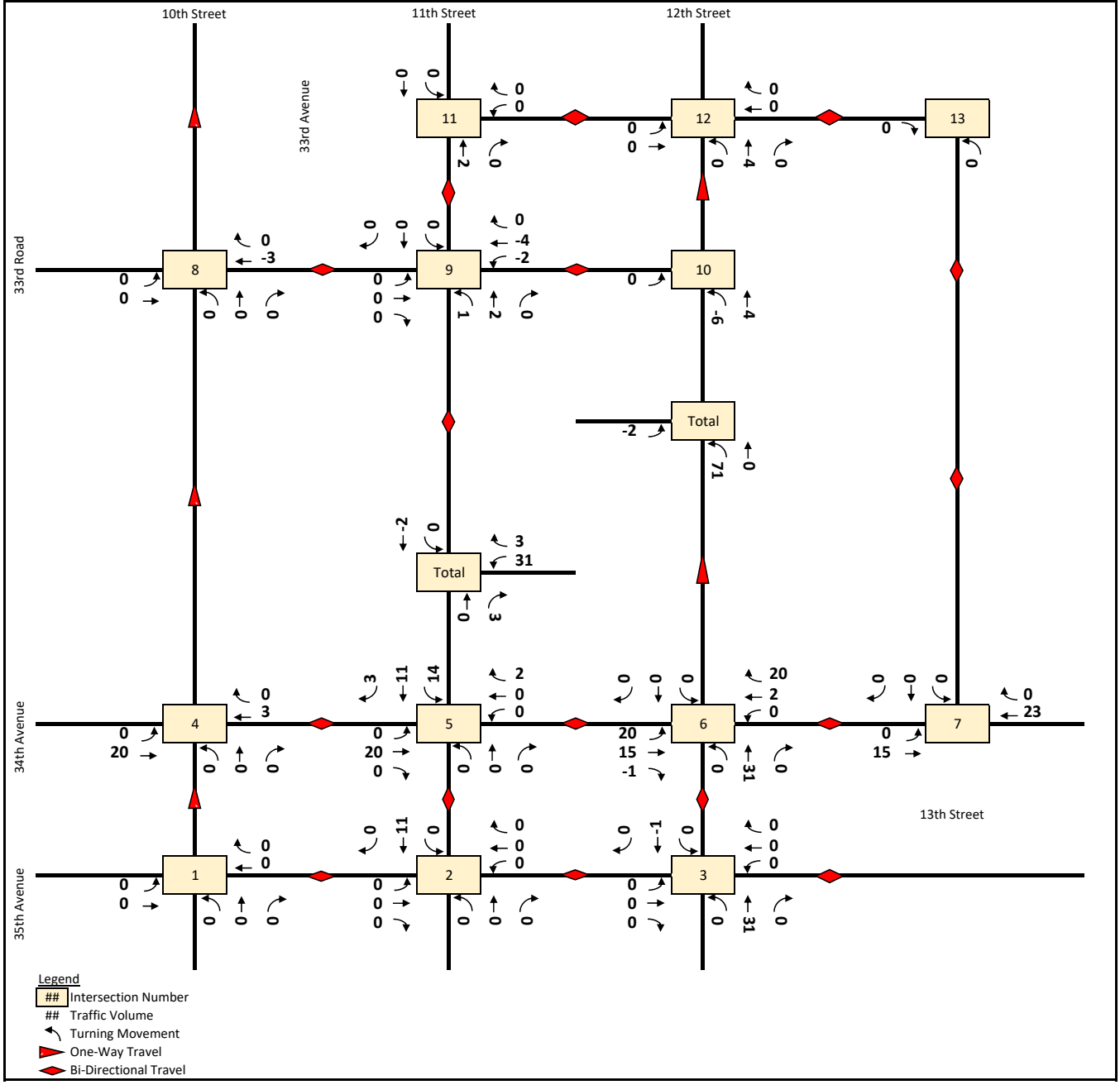

Weekday Midday - Site 1
Inbound

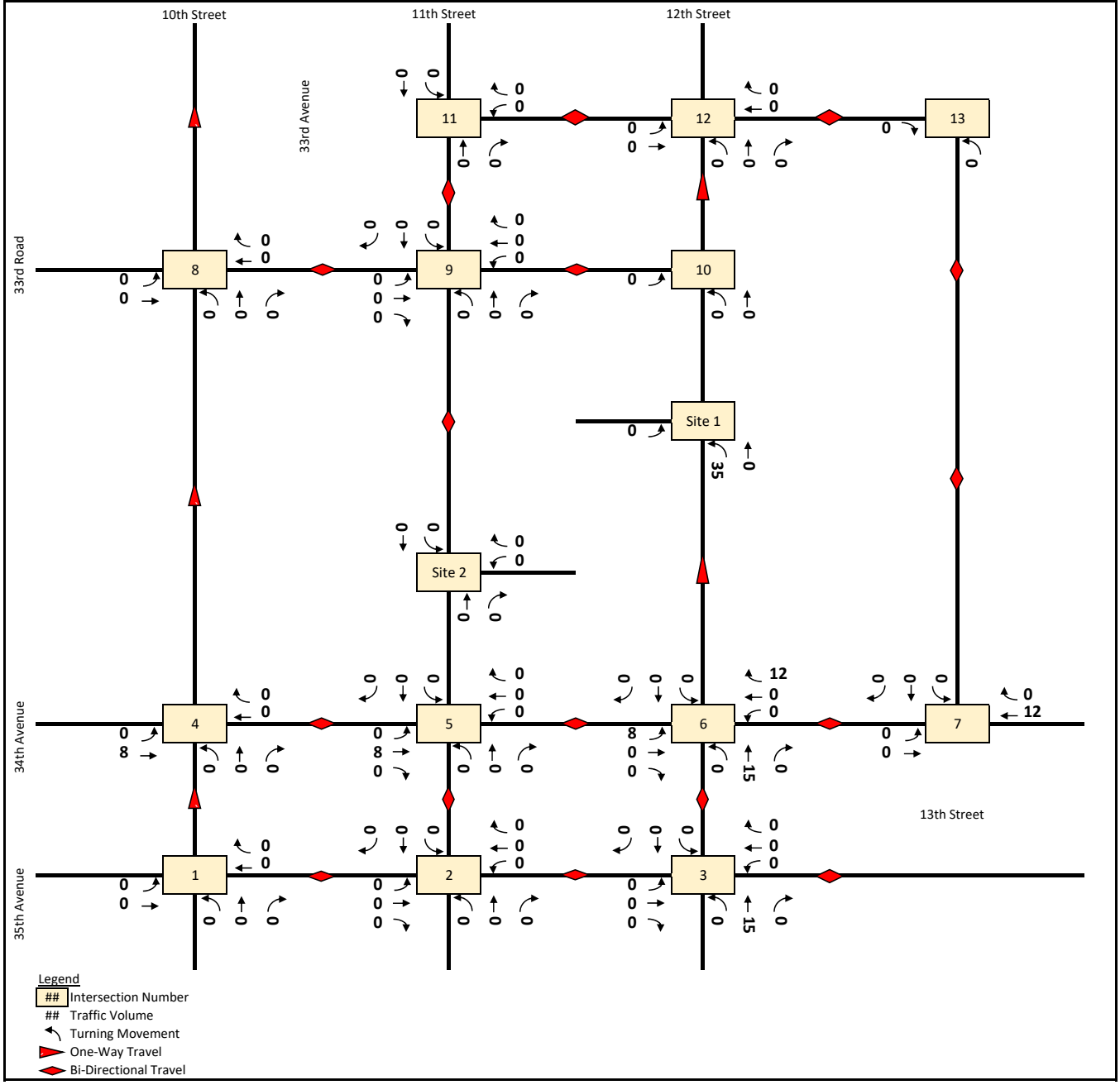

Weekday Midday - Site 1
Outbound

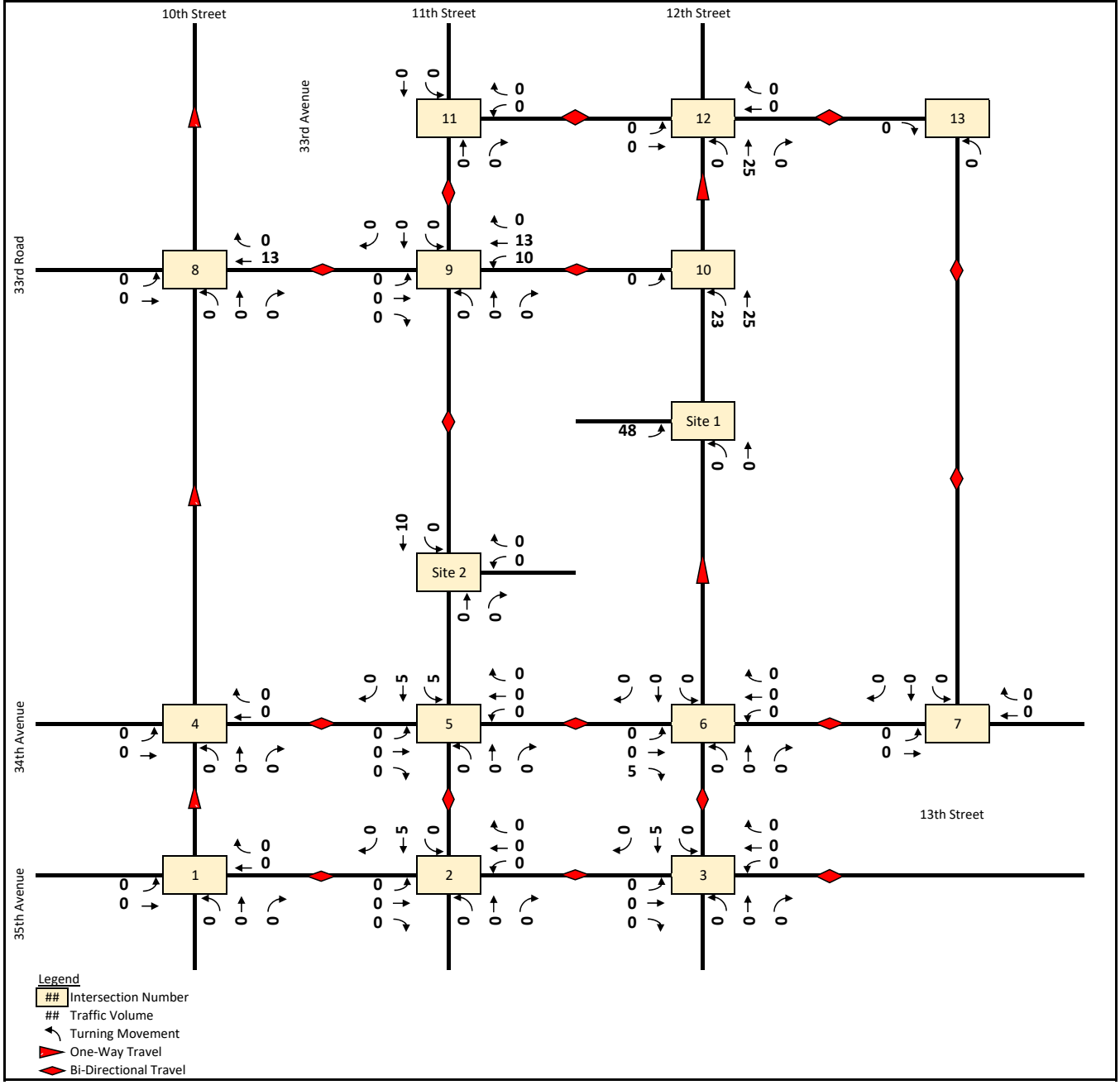

Weekday Midday - Site 1
Total

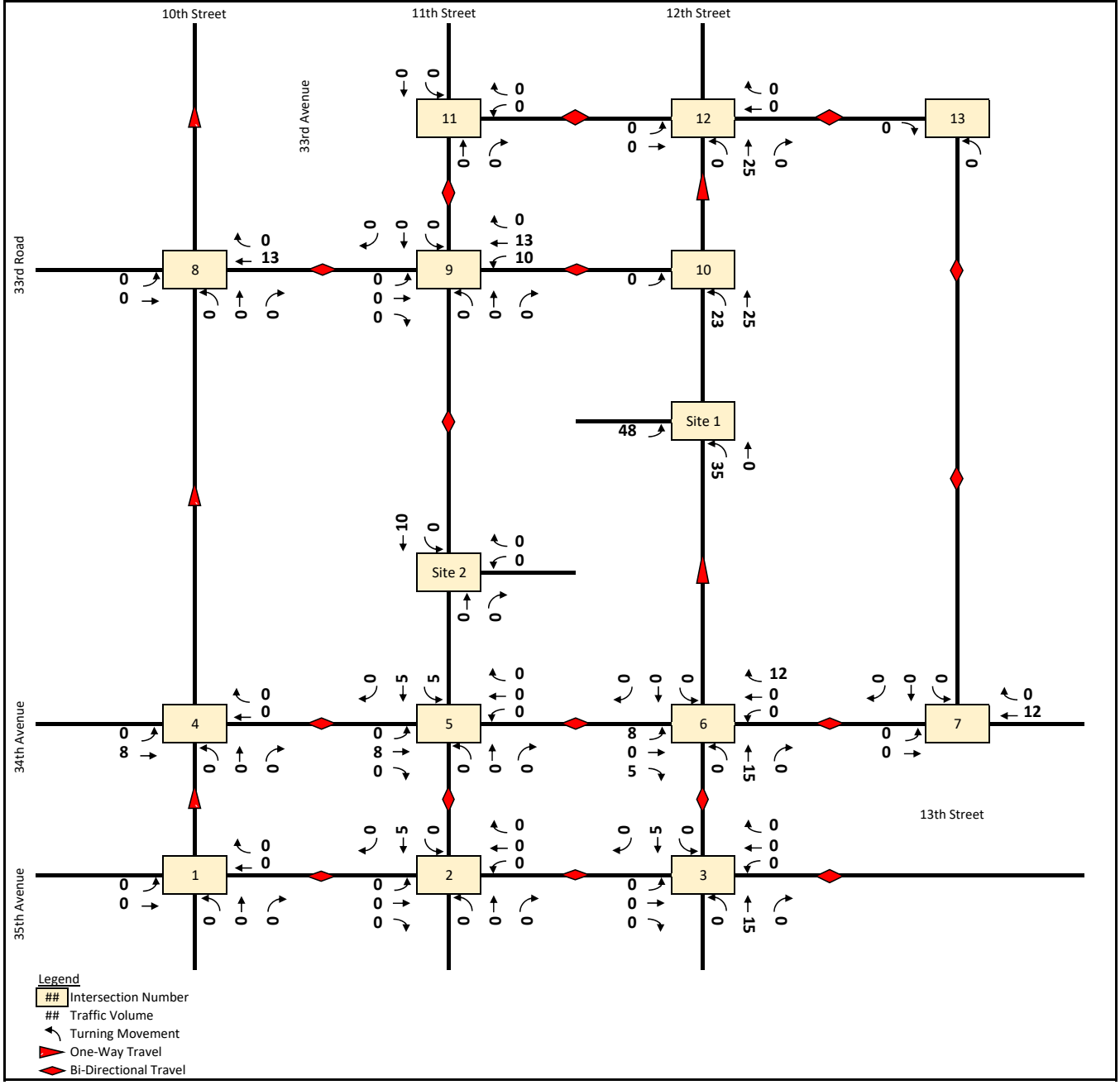

Weekday Midday - Site 2
Inbound

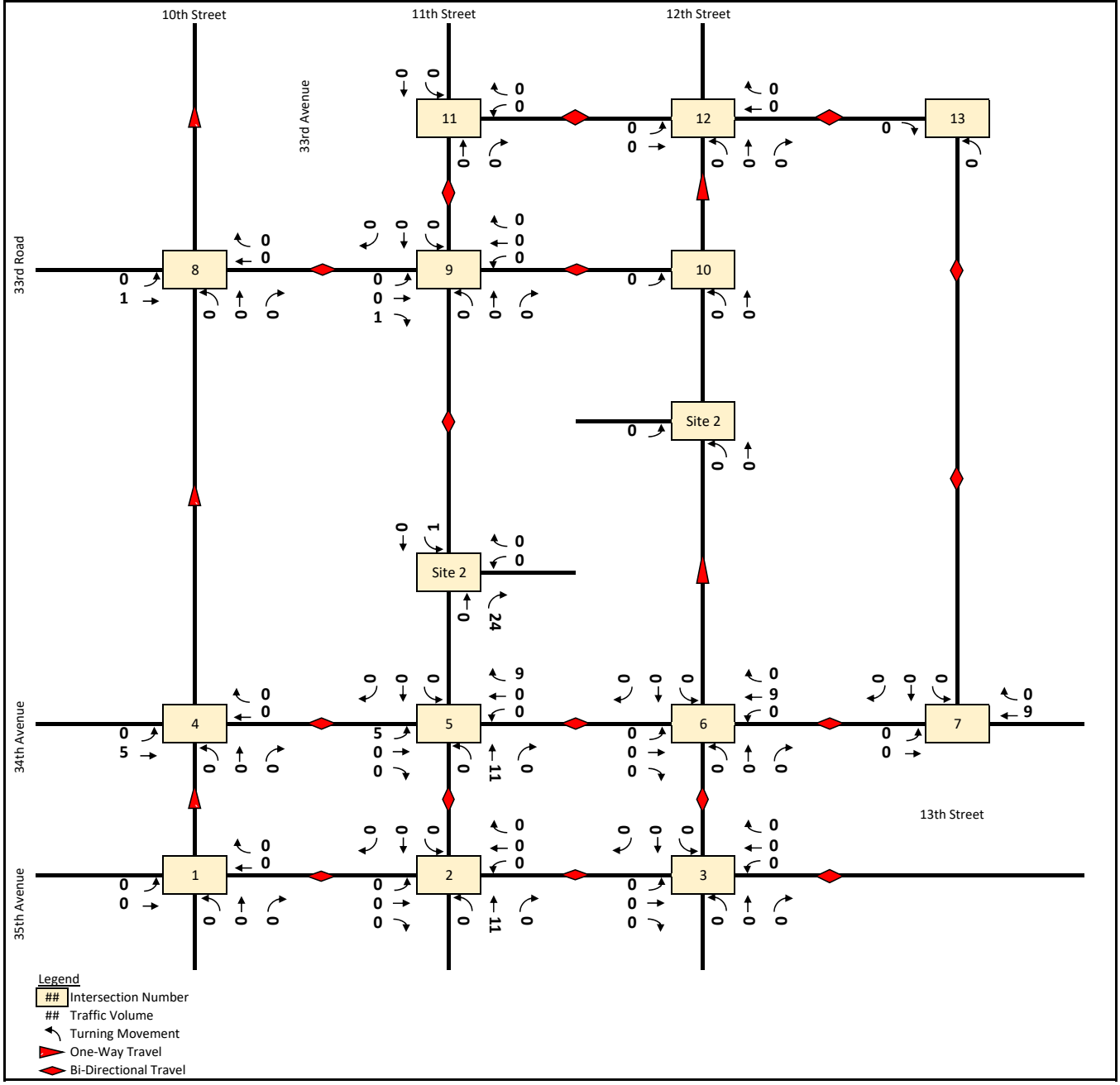

Weekday Midday - Site 2
Outbound

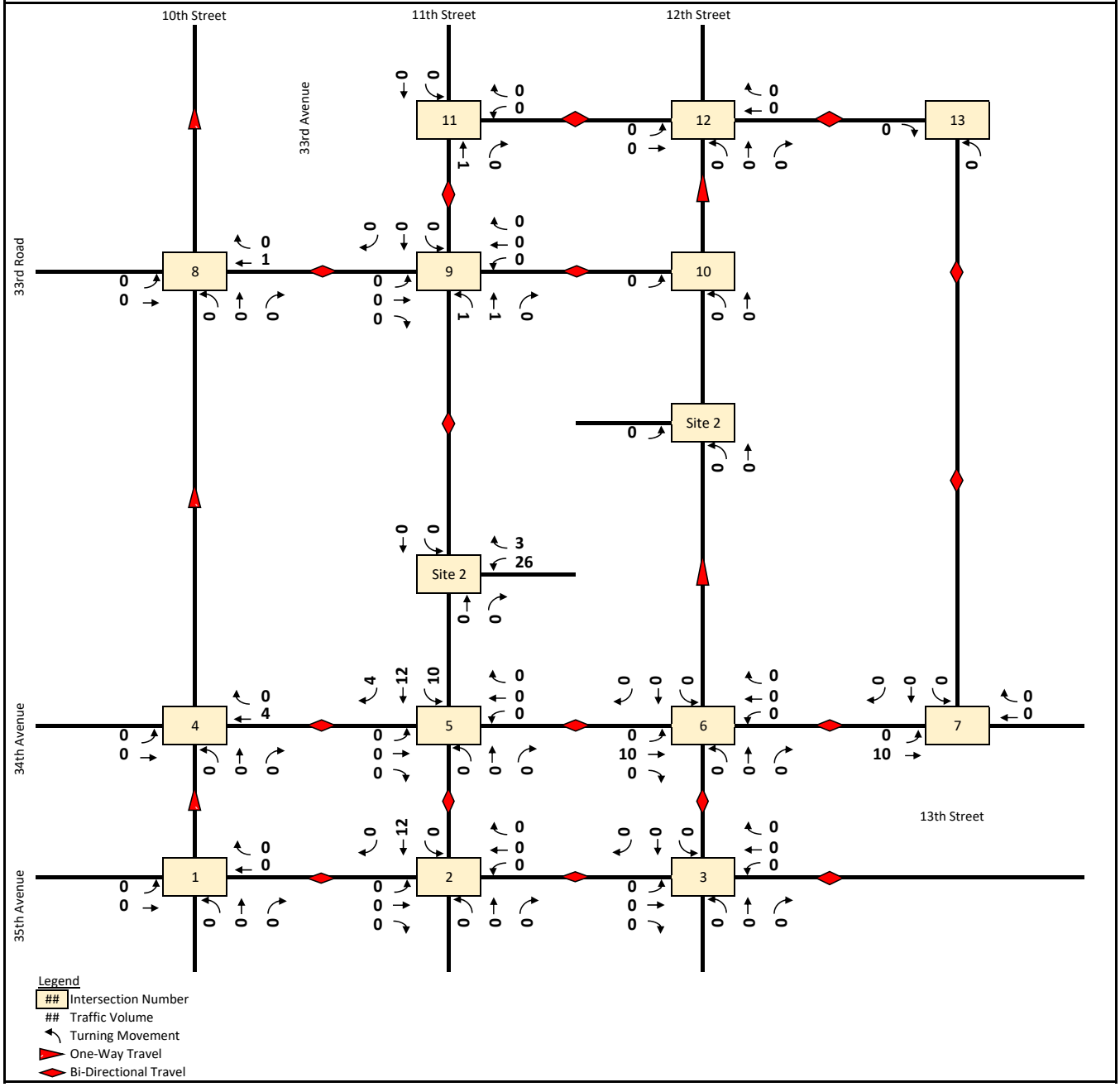

Weekday Midday - Site 2
Total

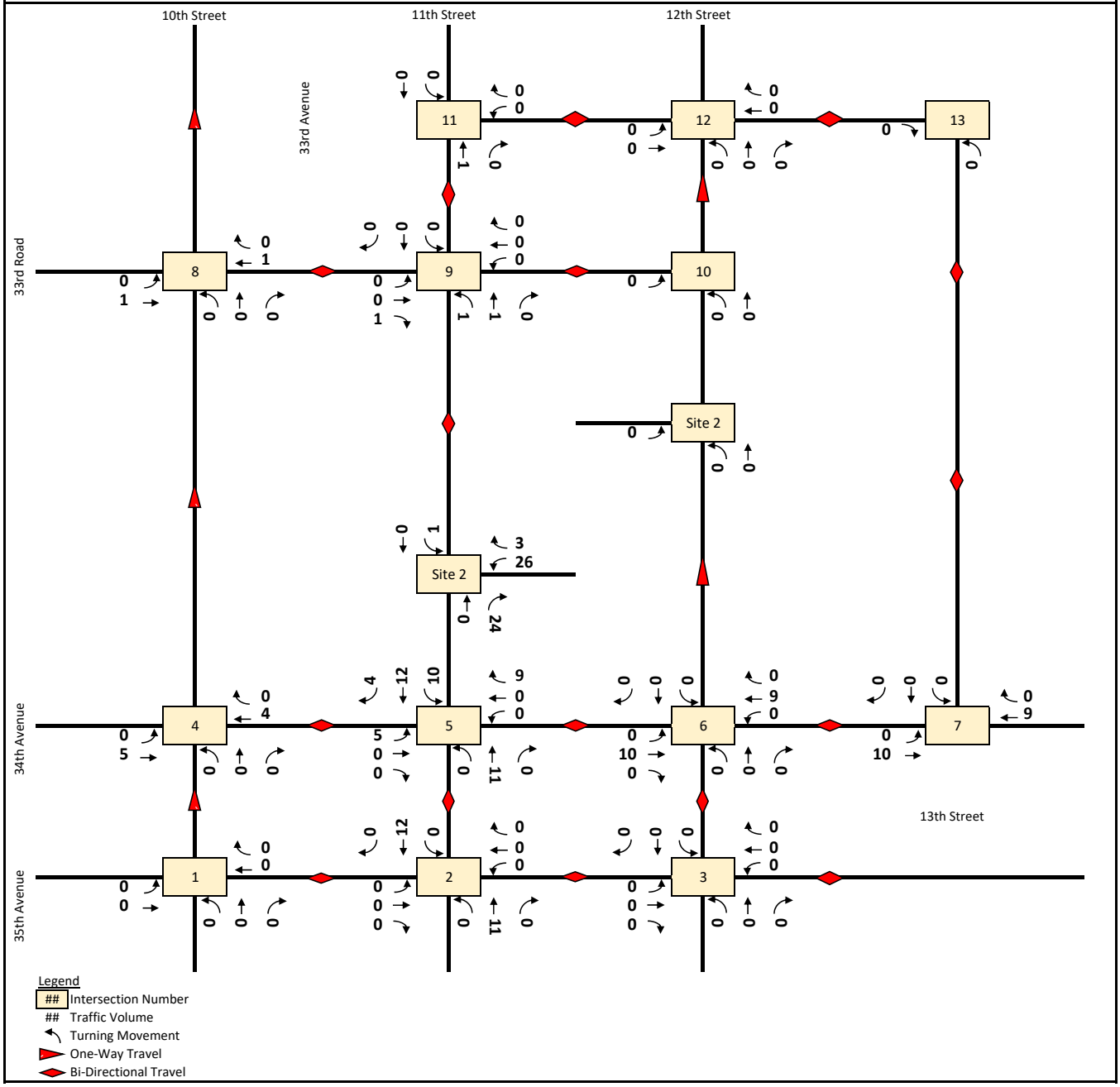

Weekday Midday - Total
Inbound

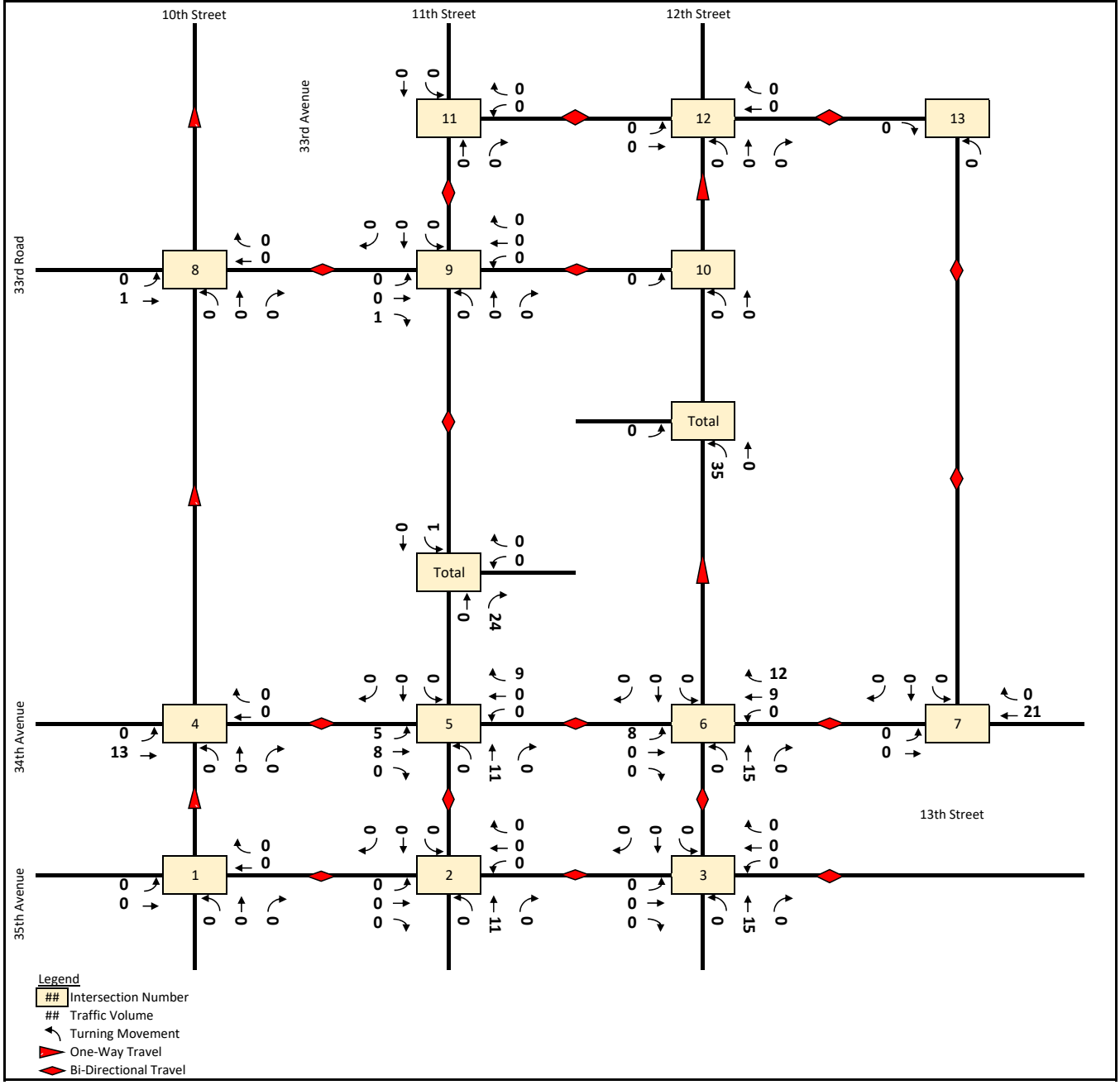

Weekday Midday - Total
Outbound

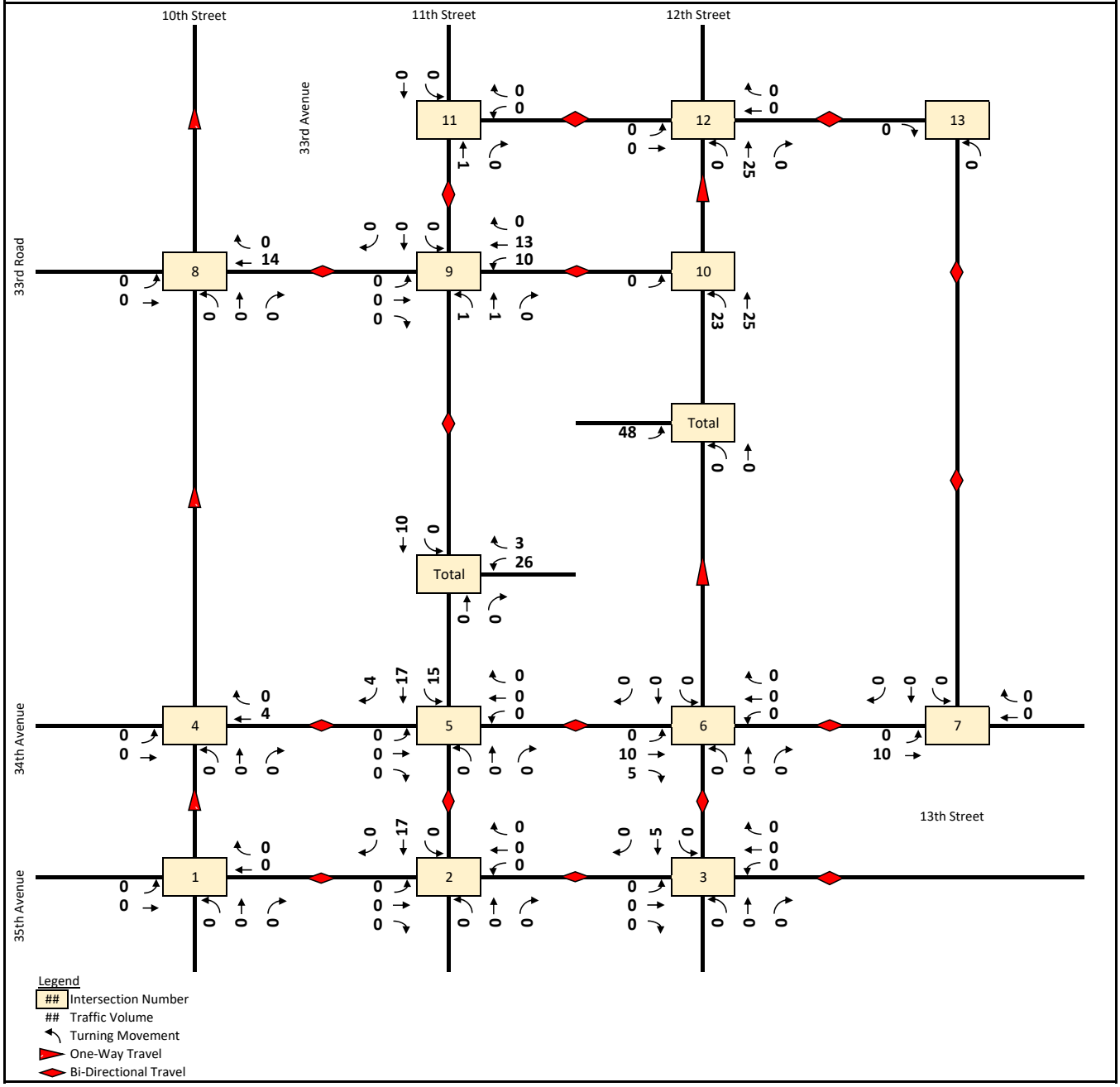

Weekday Midday - Total

Total

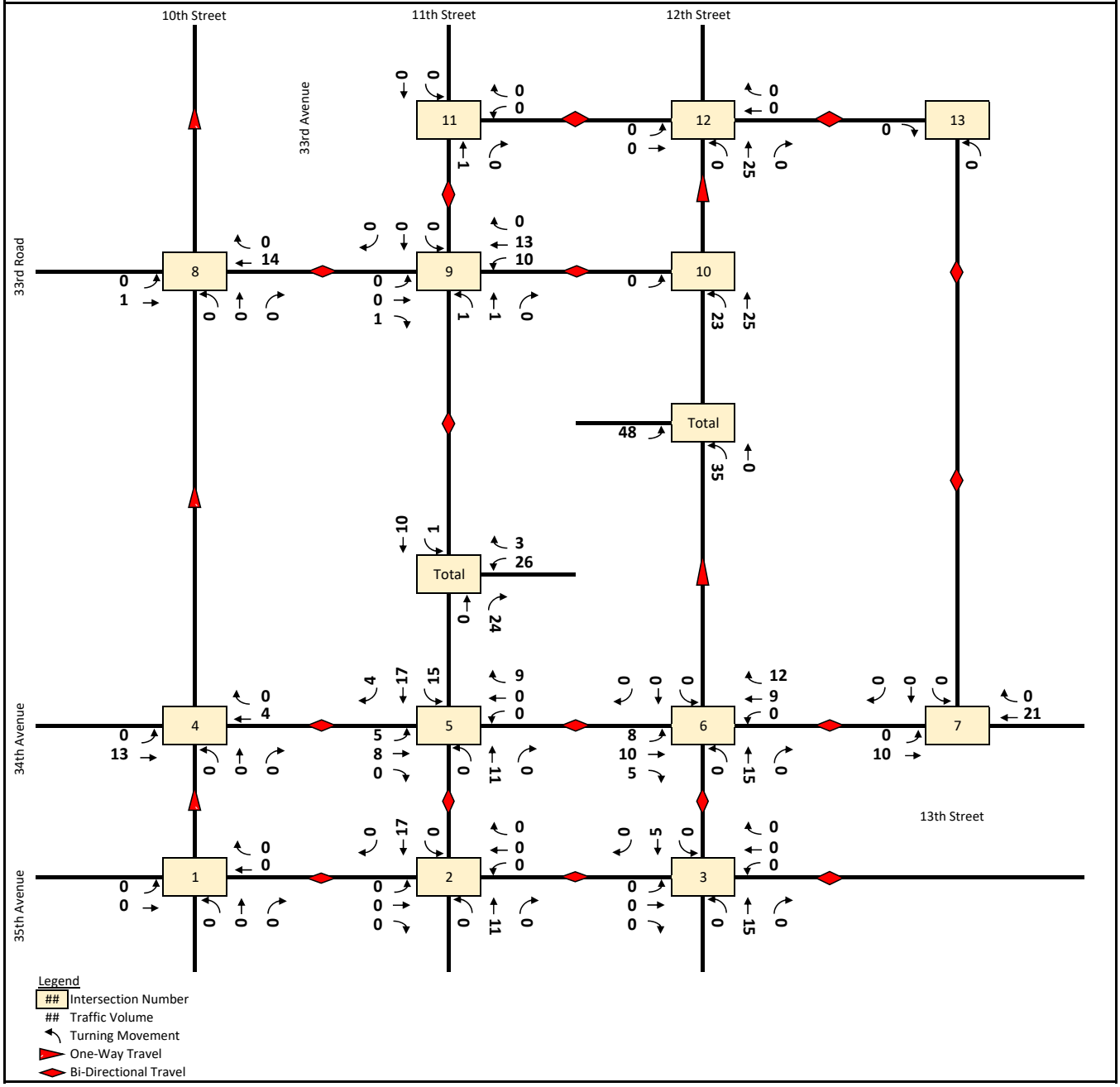

Weekday PM - Site 1
Inbound

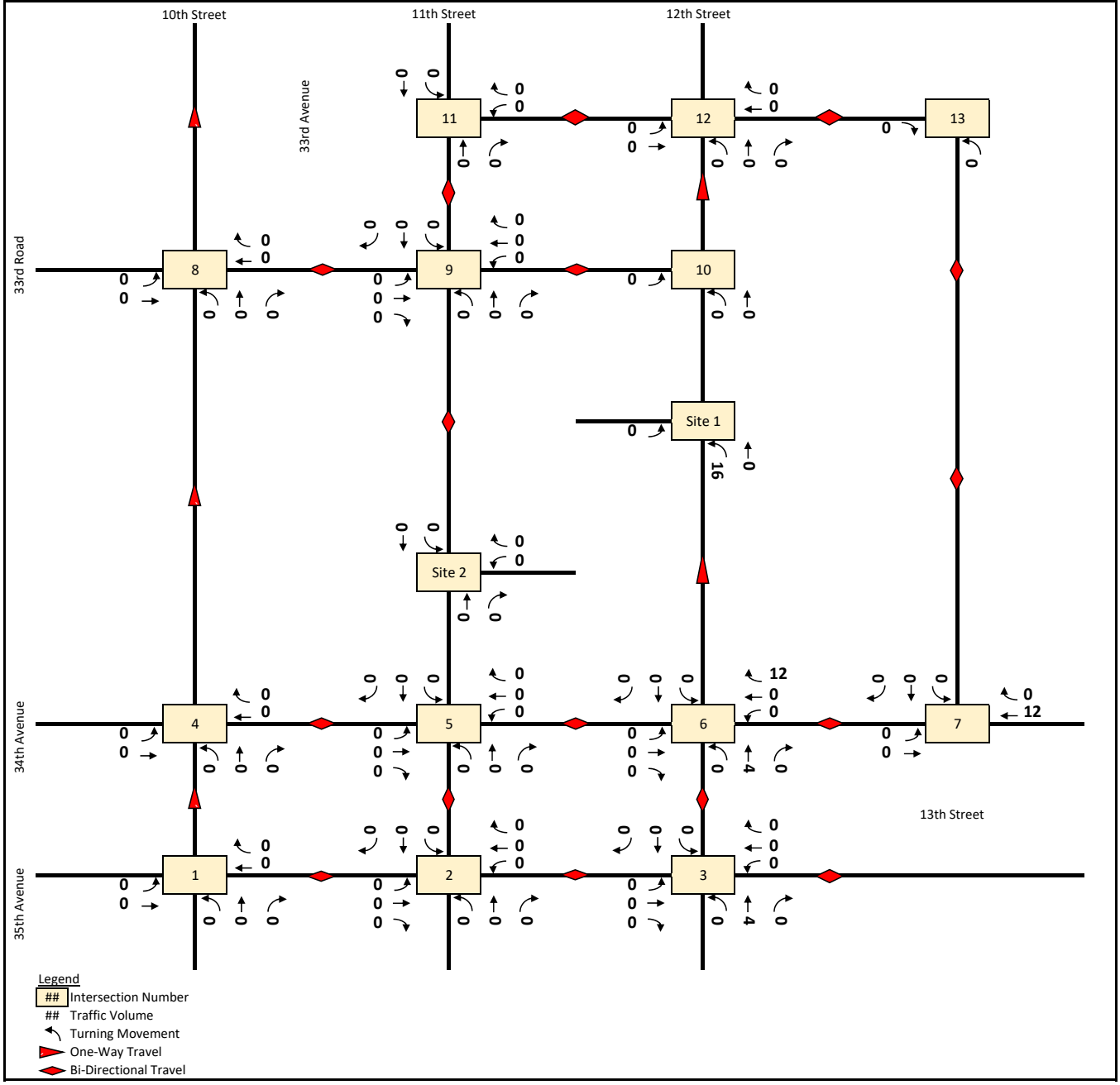

Weekday PM - Site 1
Outbound

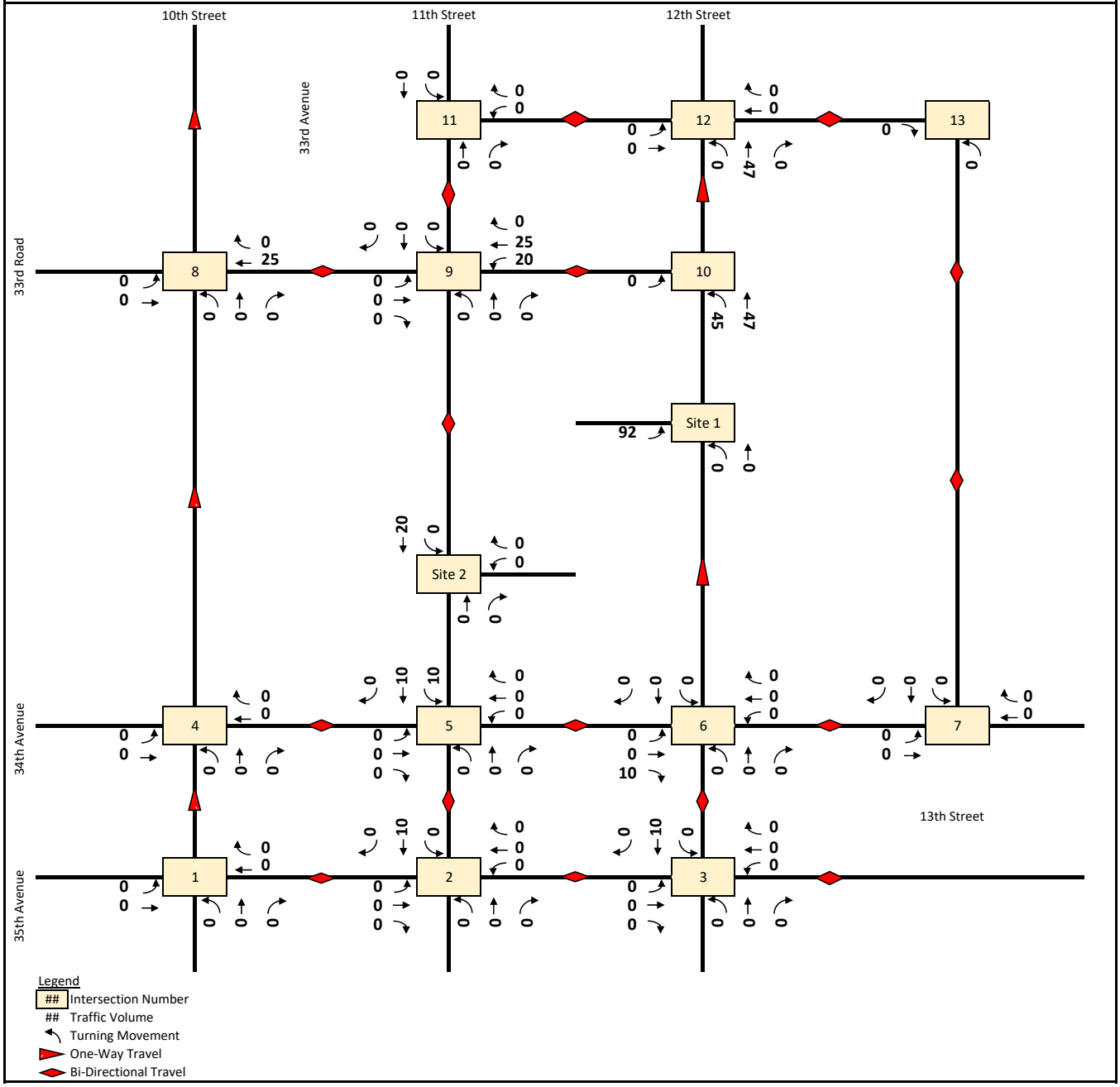

Weekday PM - Site 1
Total

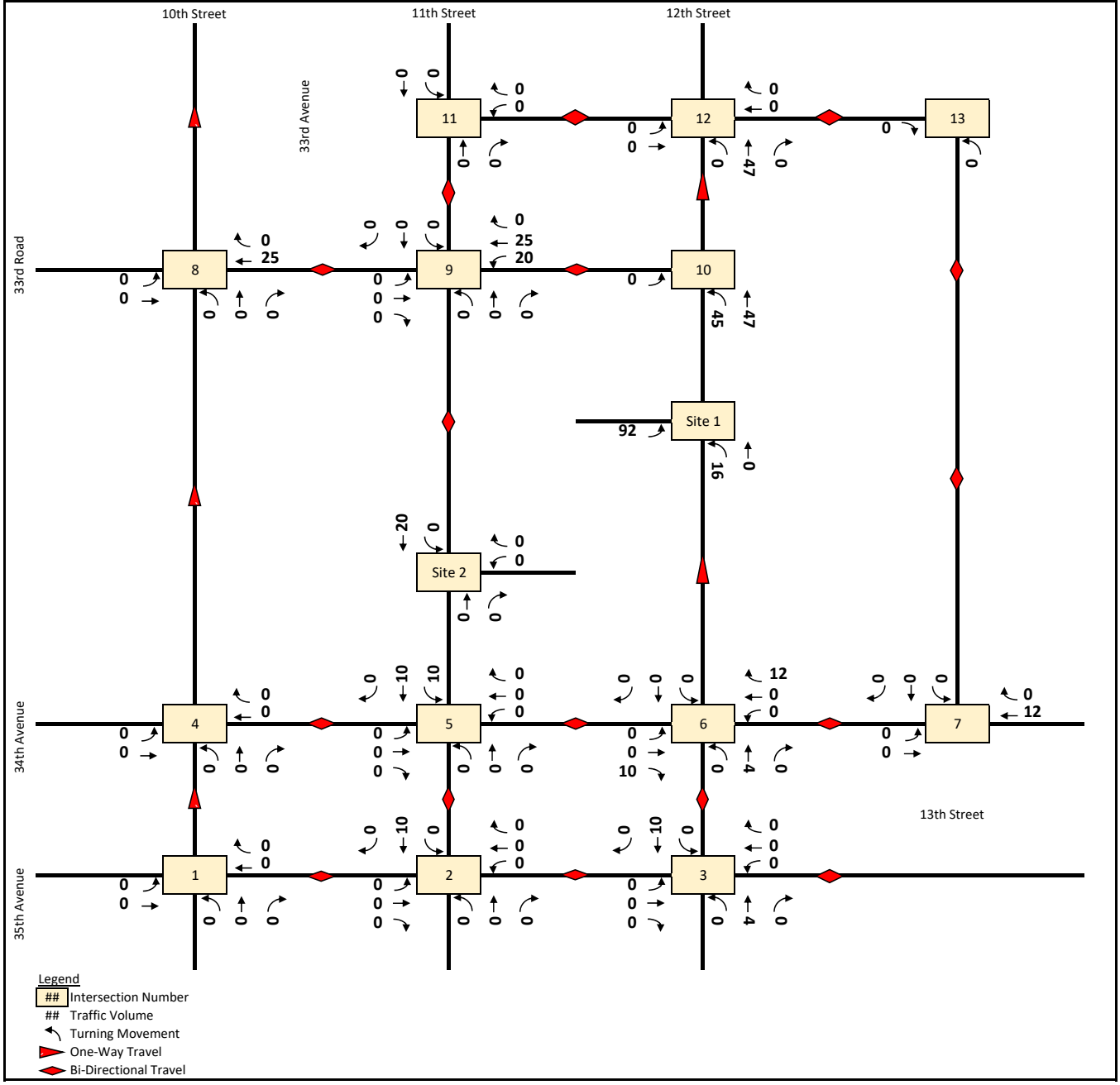

Weekday PM - Site 2
Inbound

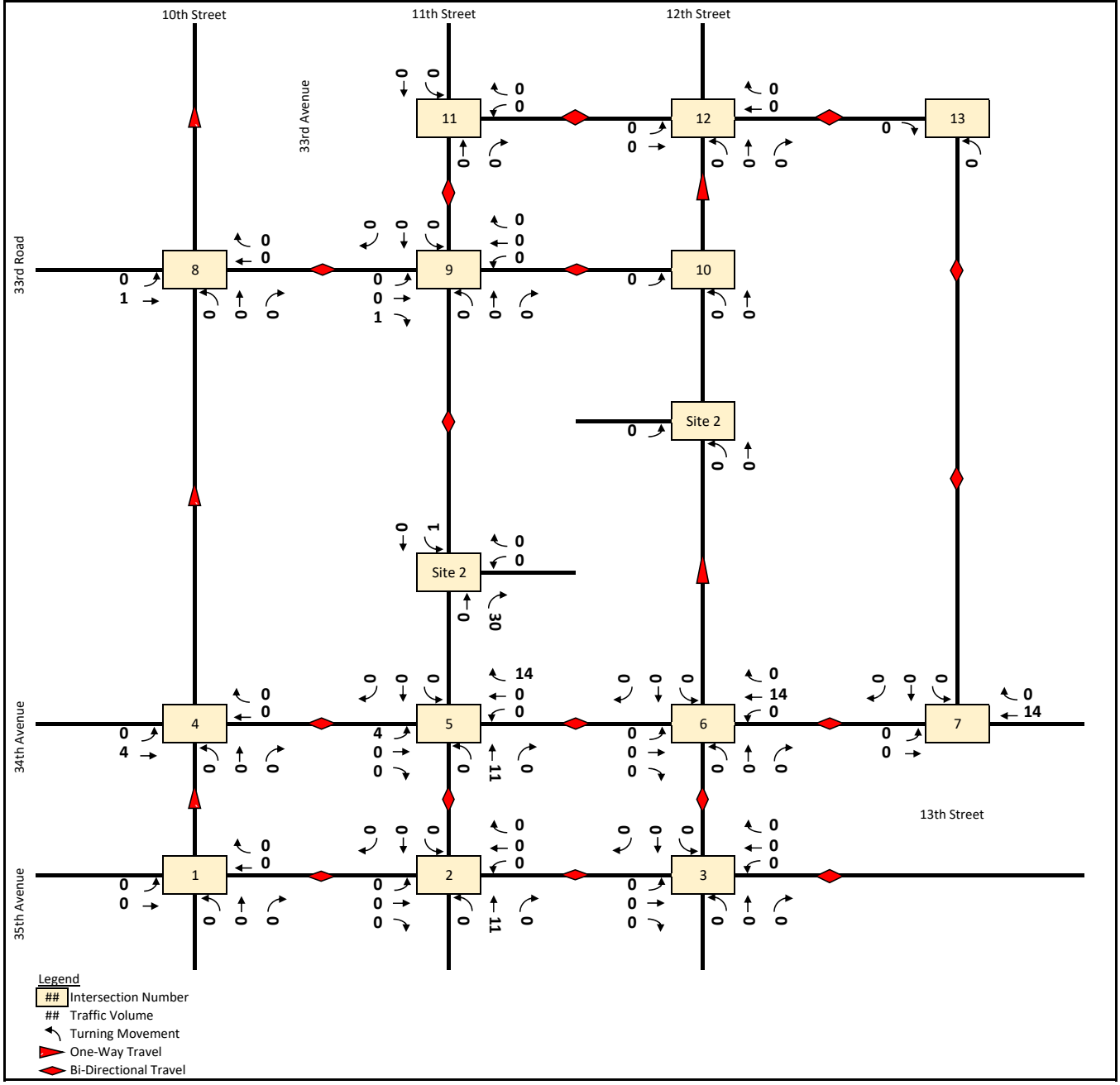

Weekday PM - Site 2
Outbound

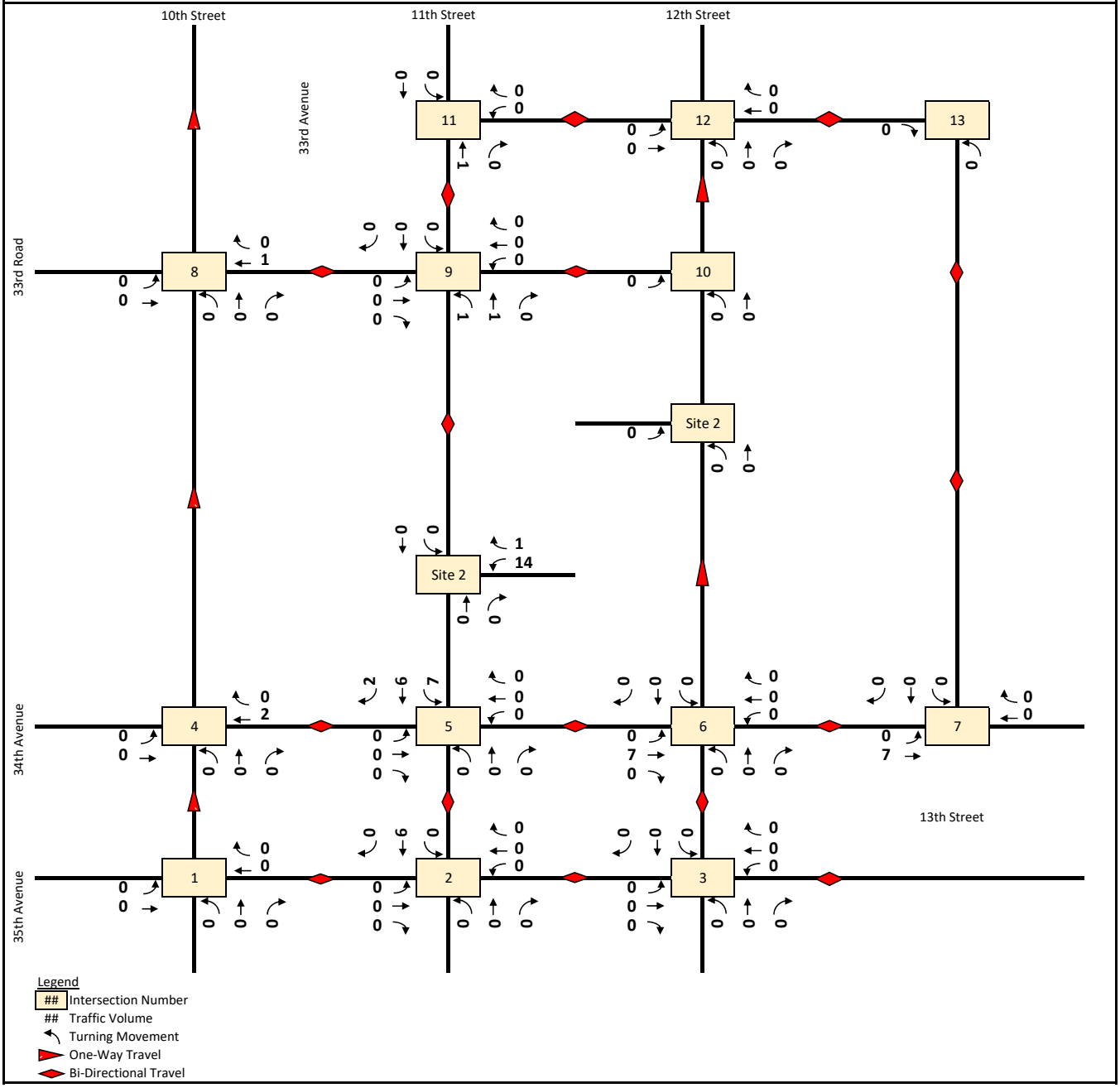

Weekday PM - Site 2
Total

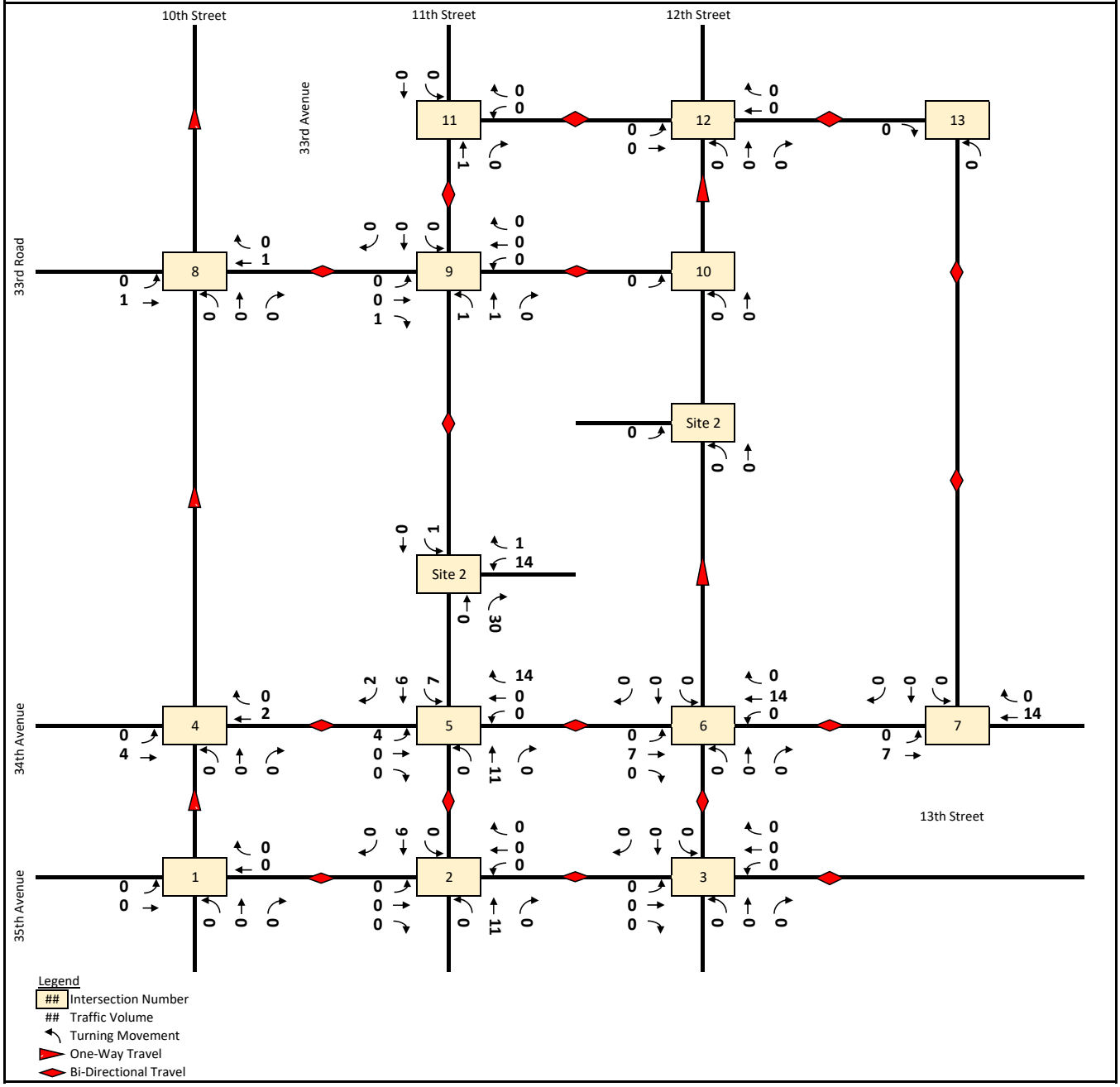

Weekday PM - Total
Inbound

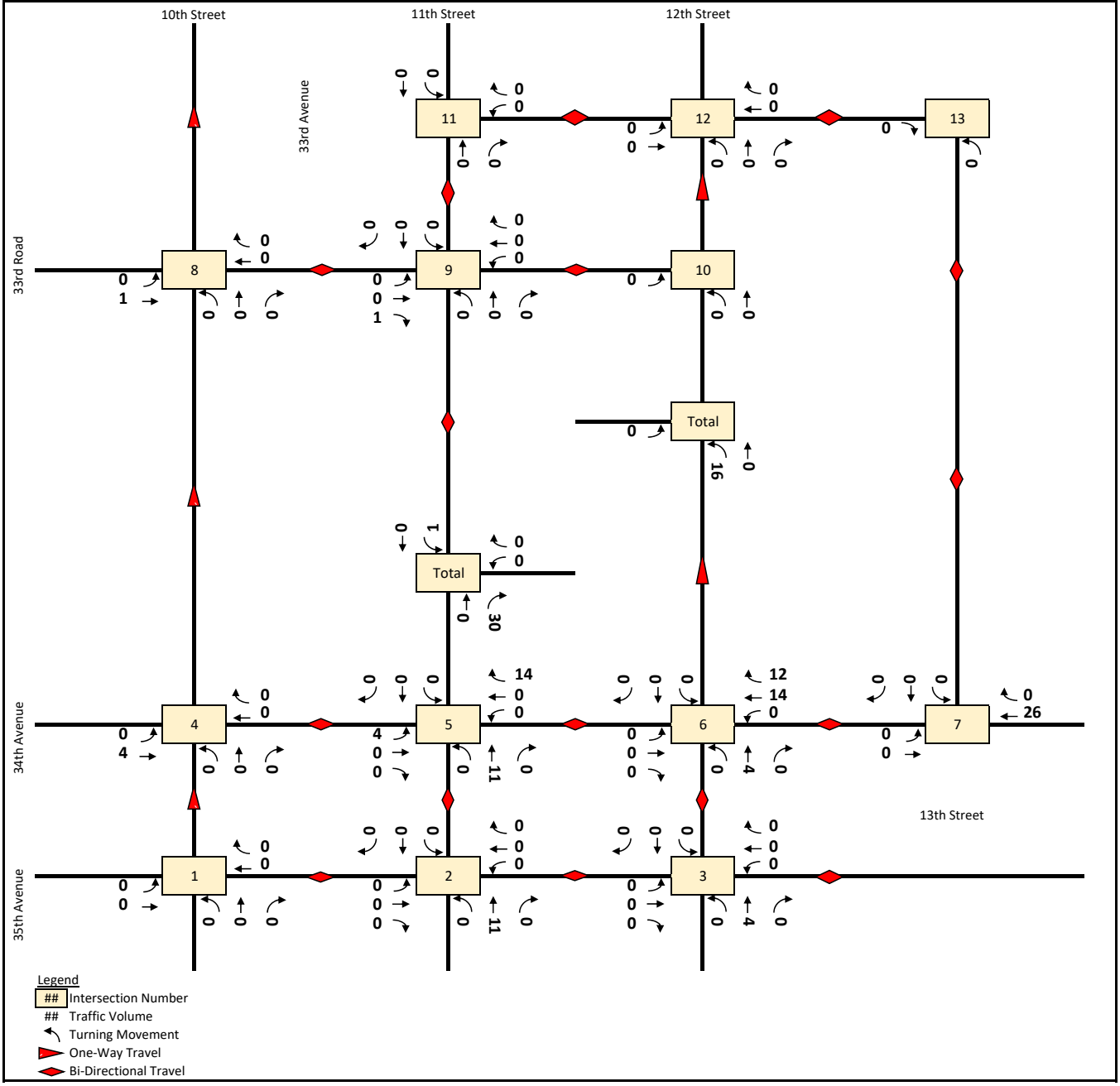

Weekday PM - Total
Outbound

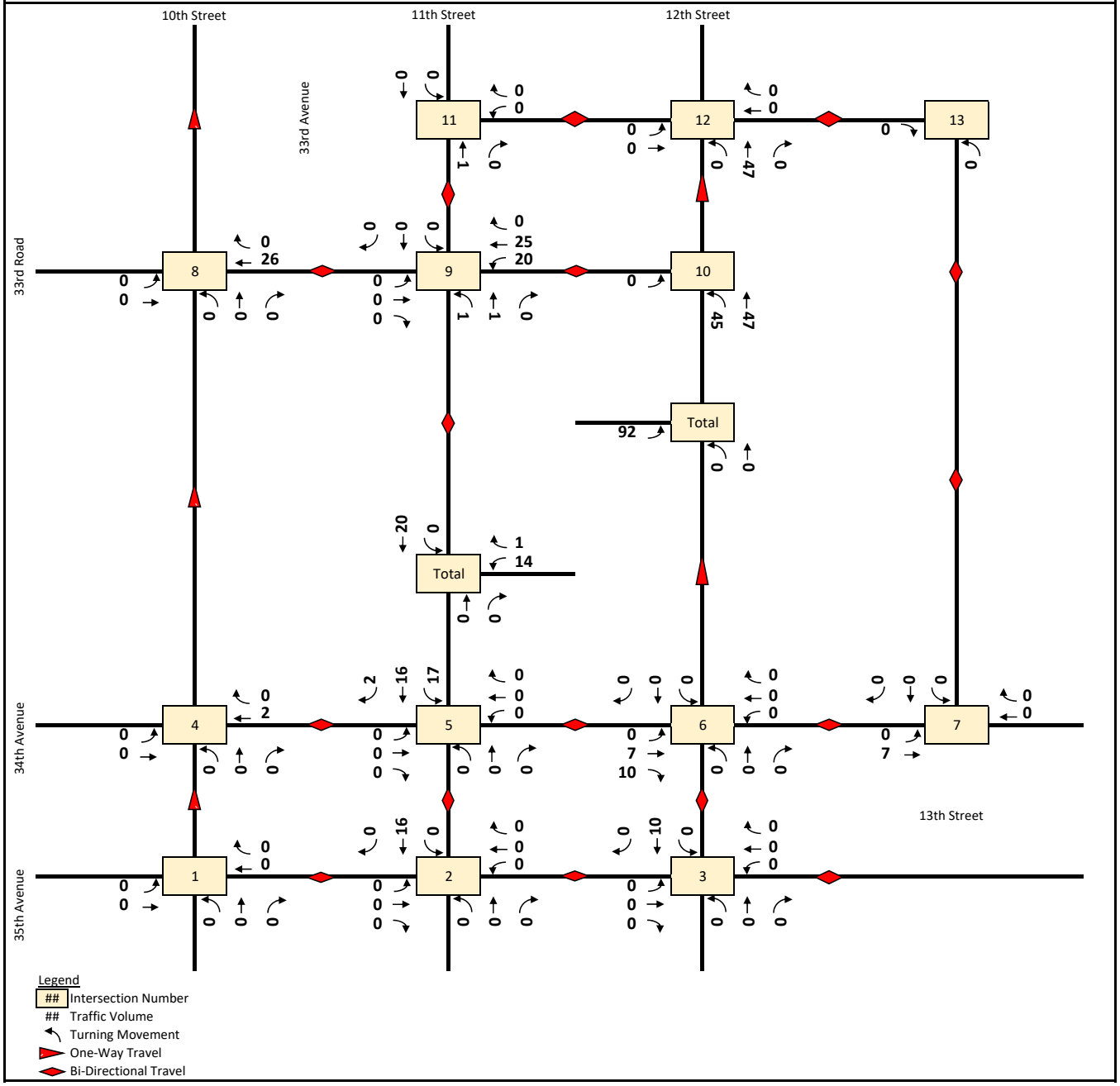

Weekday PM - Total

Total

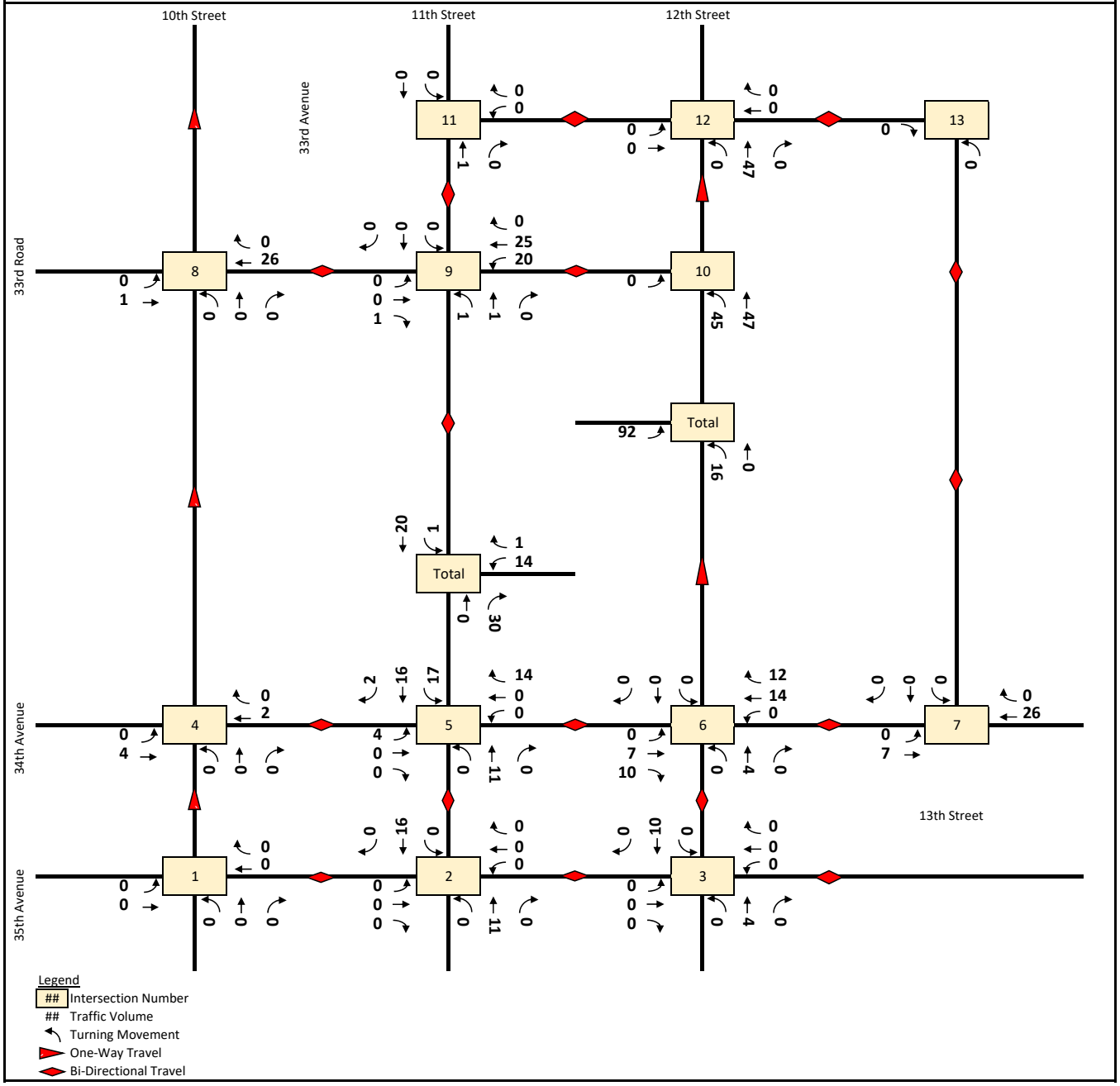

Saturday Midday - Site 1
Inbound

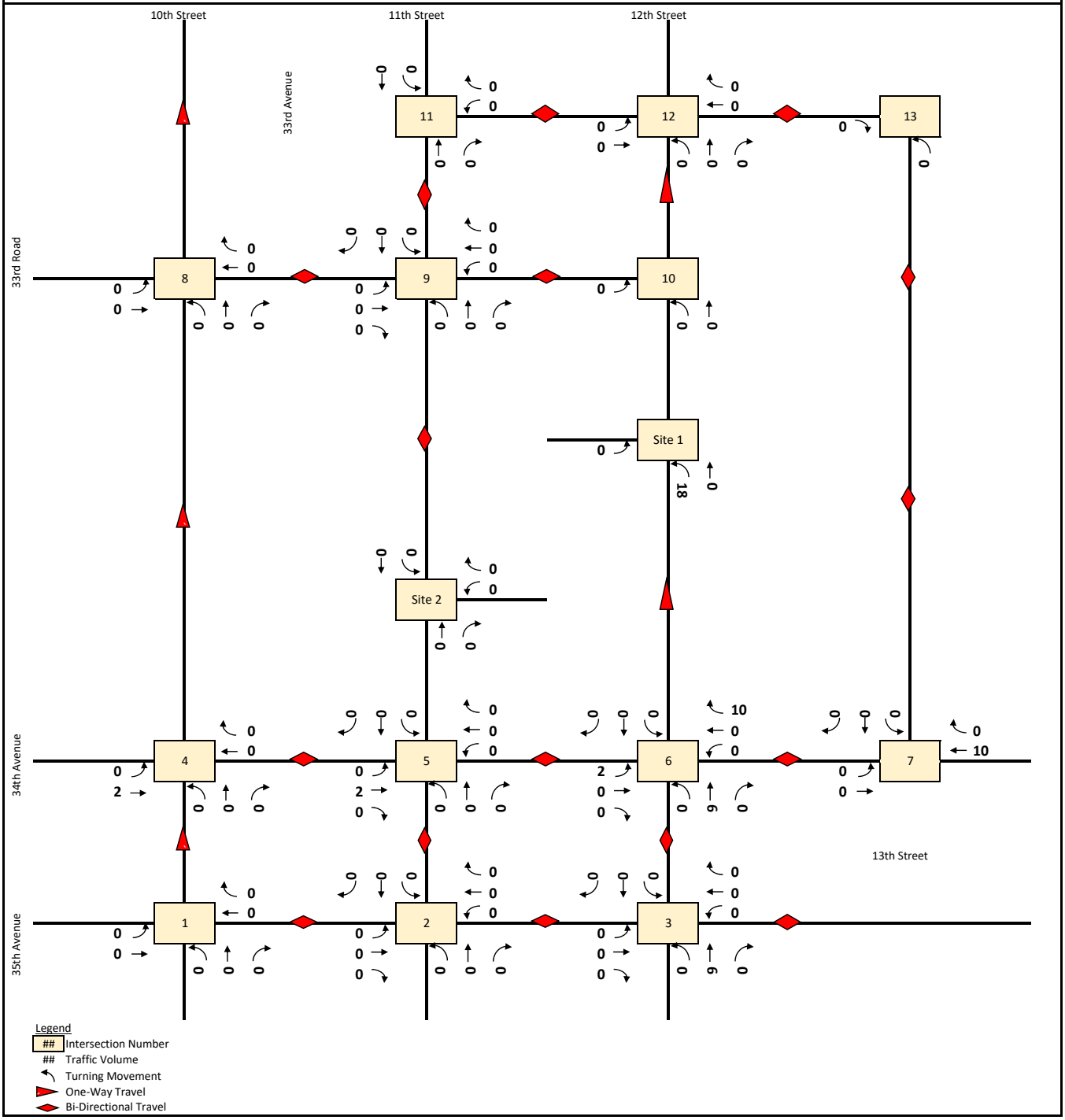

Saturday Midday - Site 1
Outbound

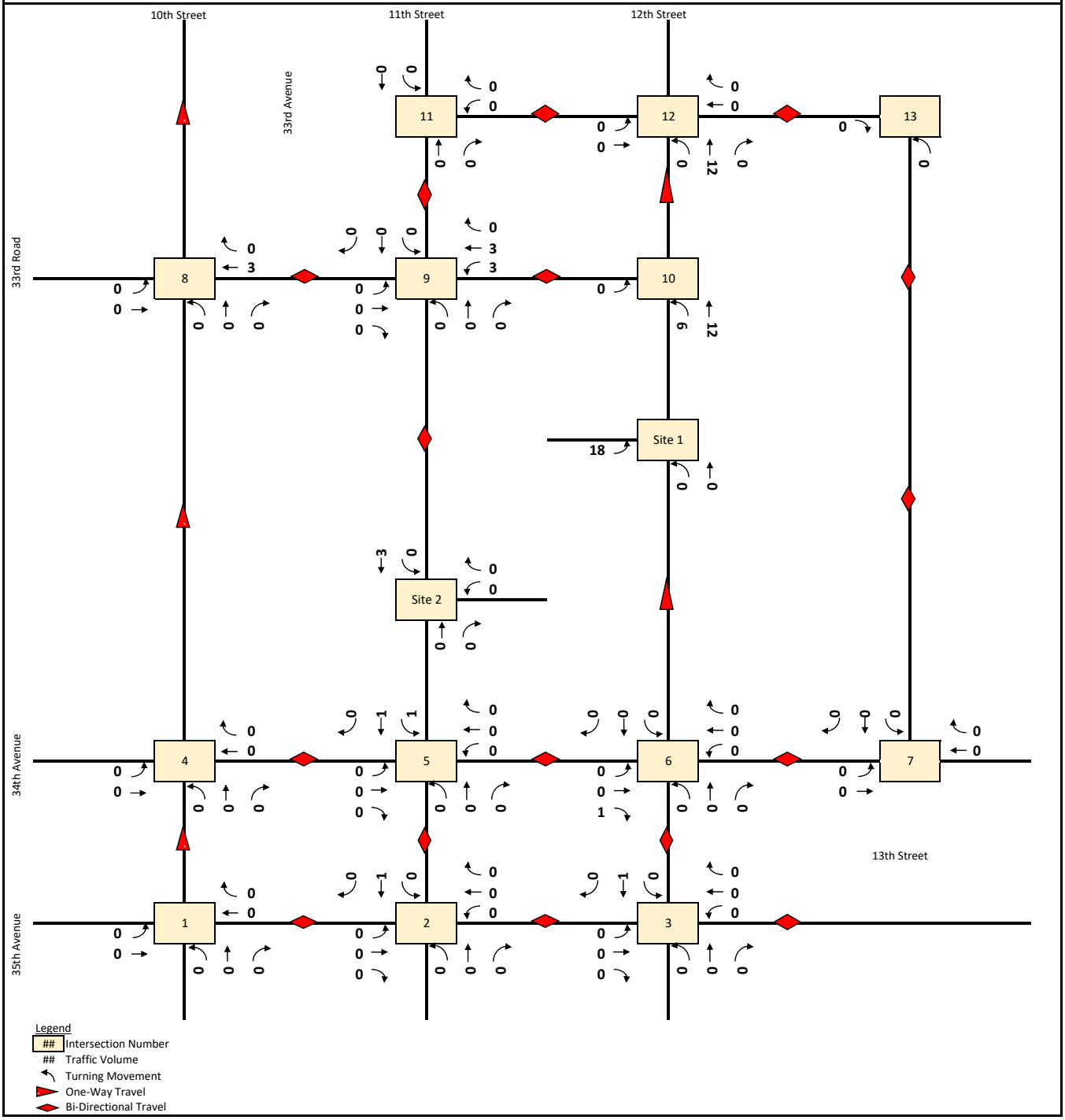

Saturday Midday - Site 1
Total

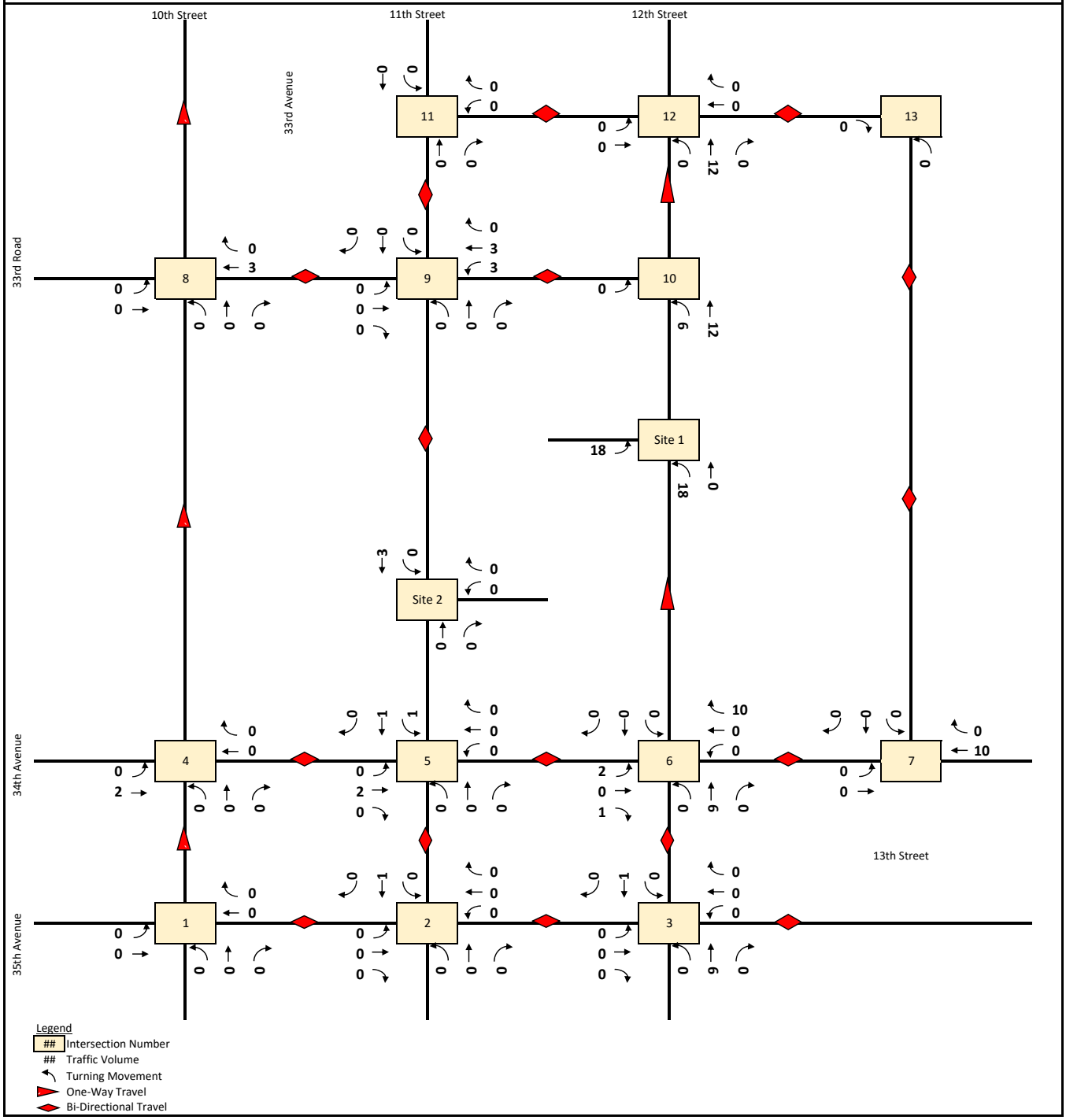

Saturday Midday - Site 2
Inbound

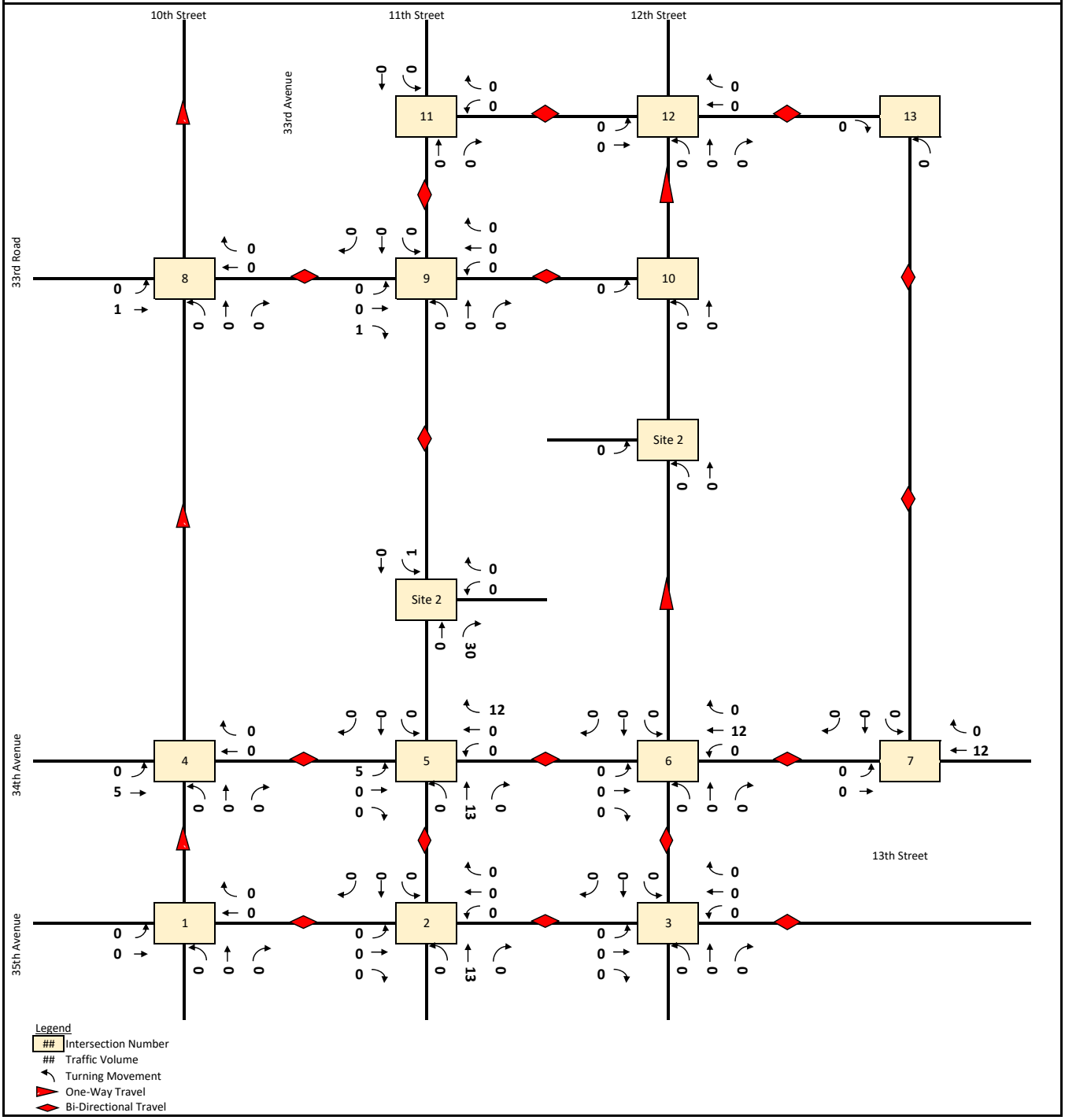

Saturday Midday - Site 2
Outbound

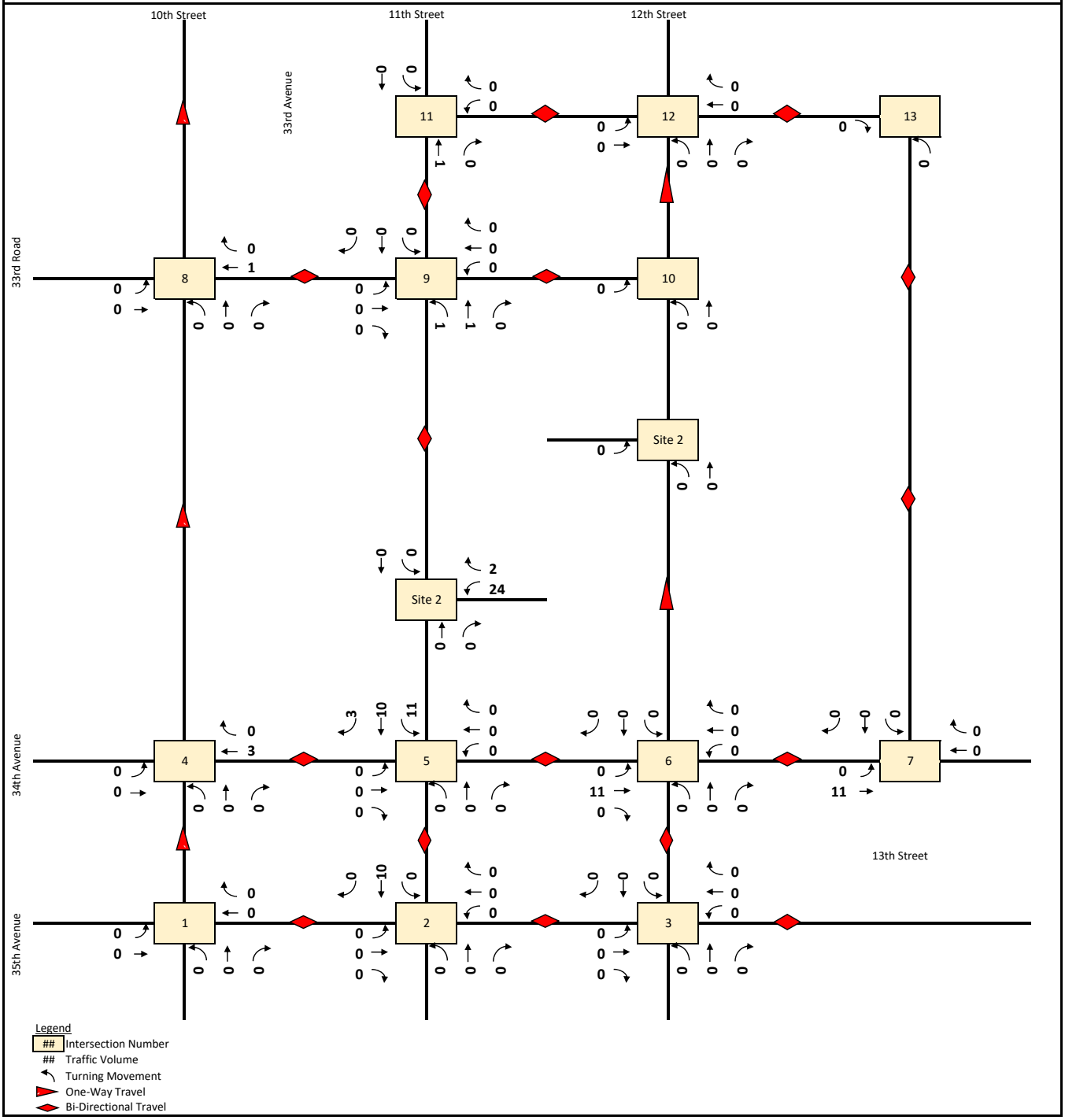

Saturday Midday - Site 2
Total

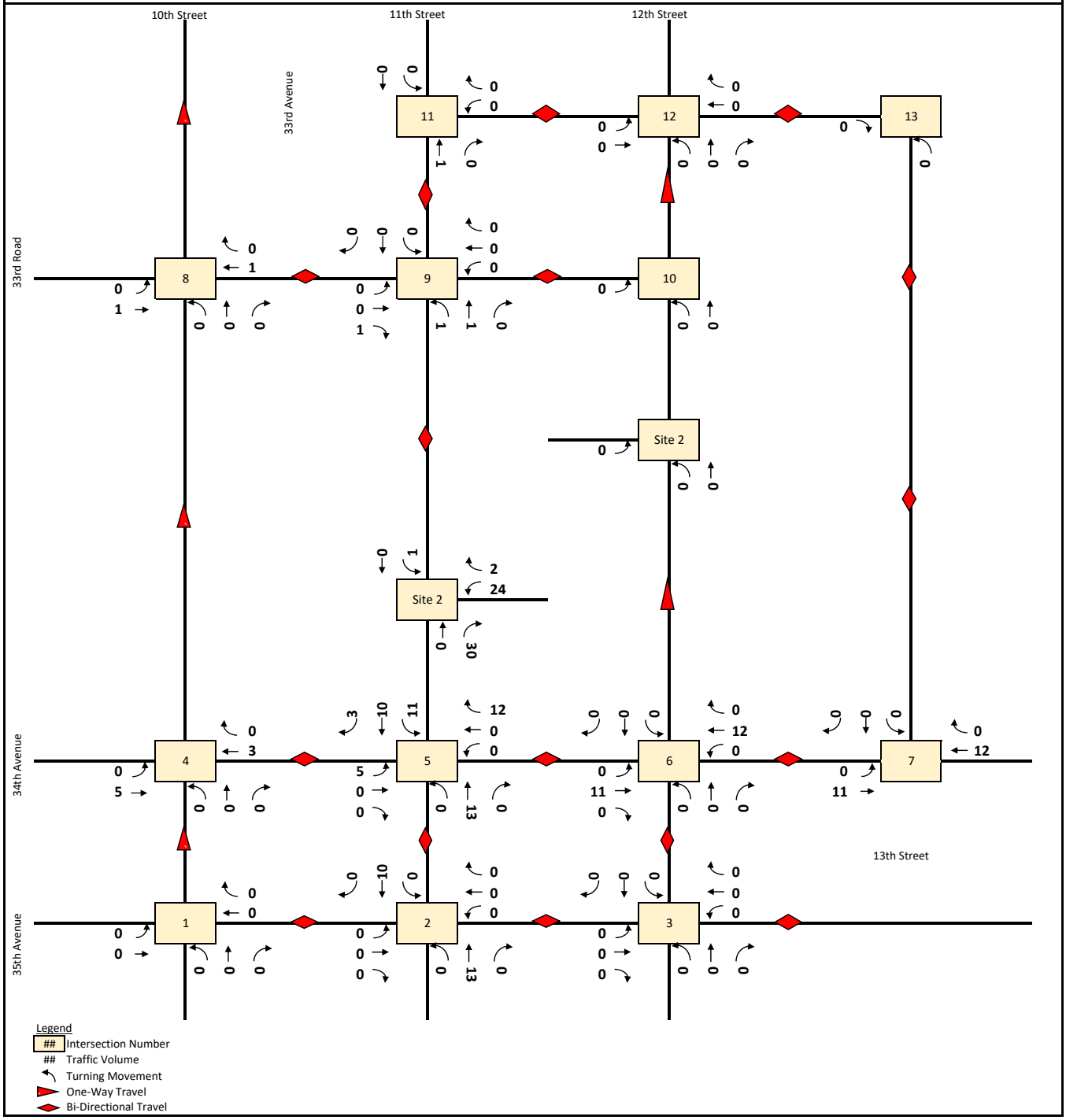

Saturday Midday - Total
Inbound

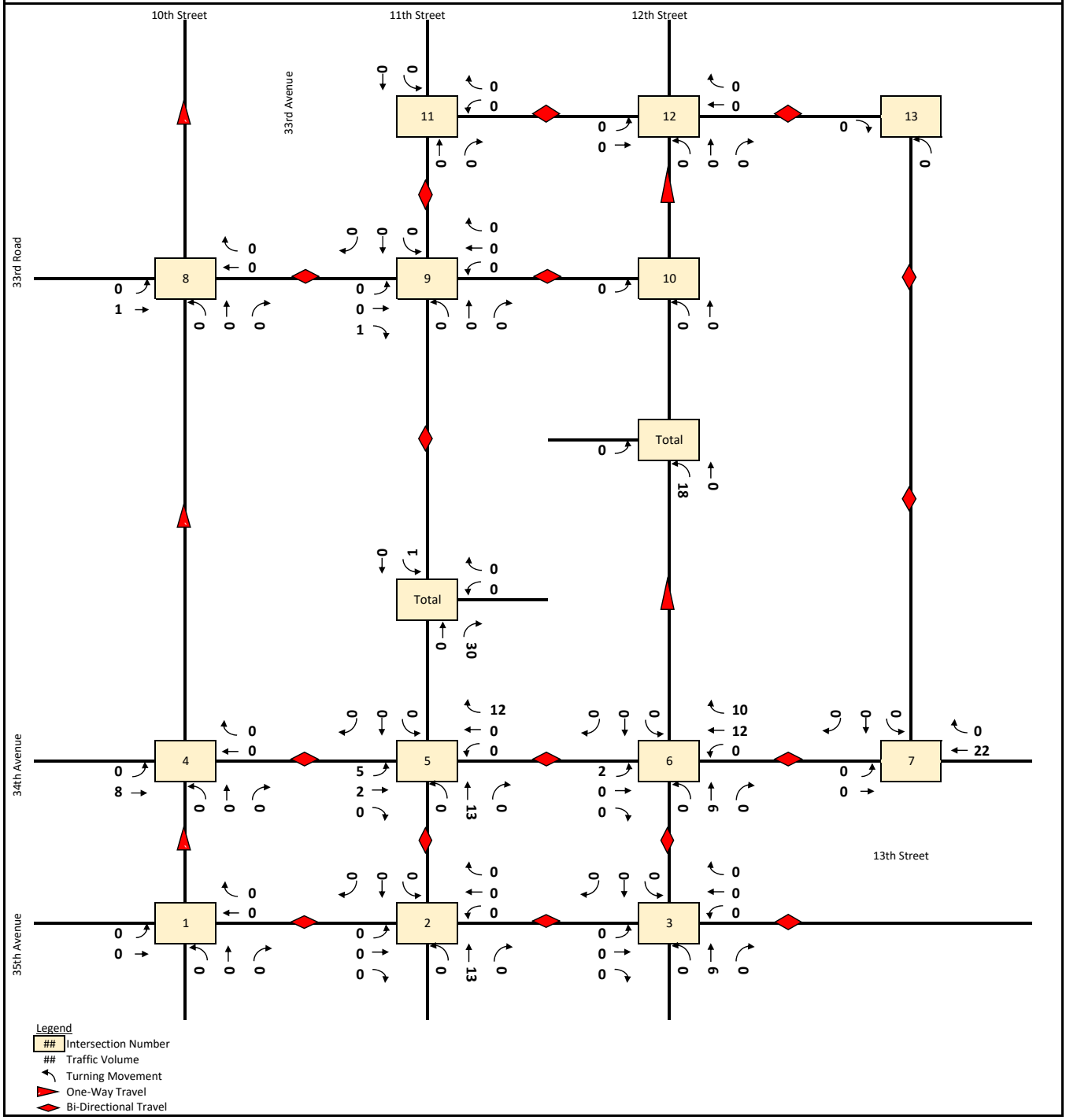

Saturday Midday - Total
Outbound

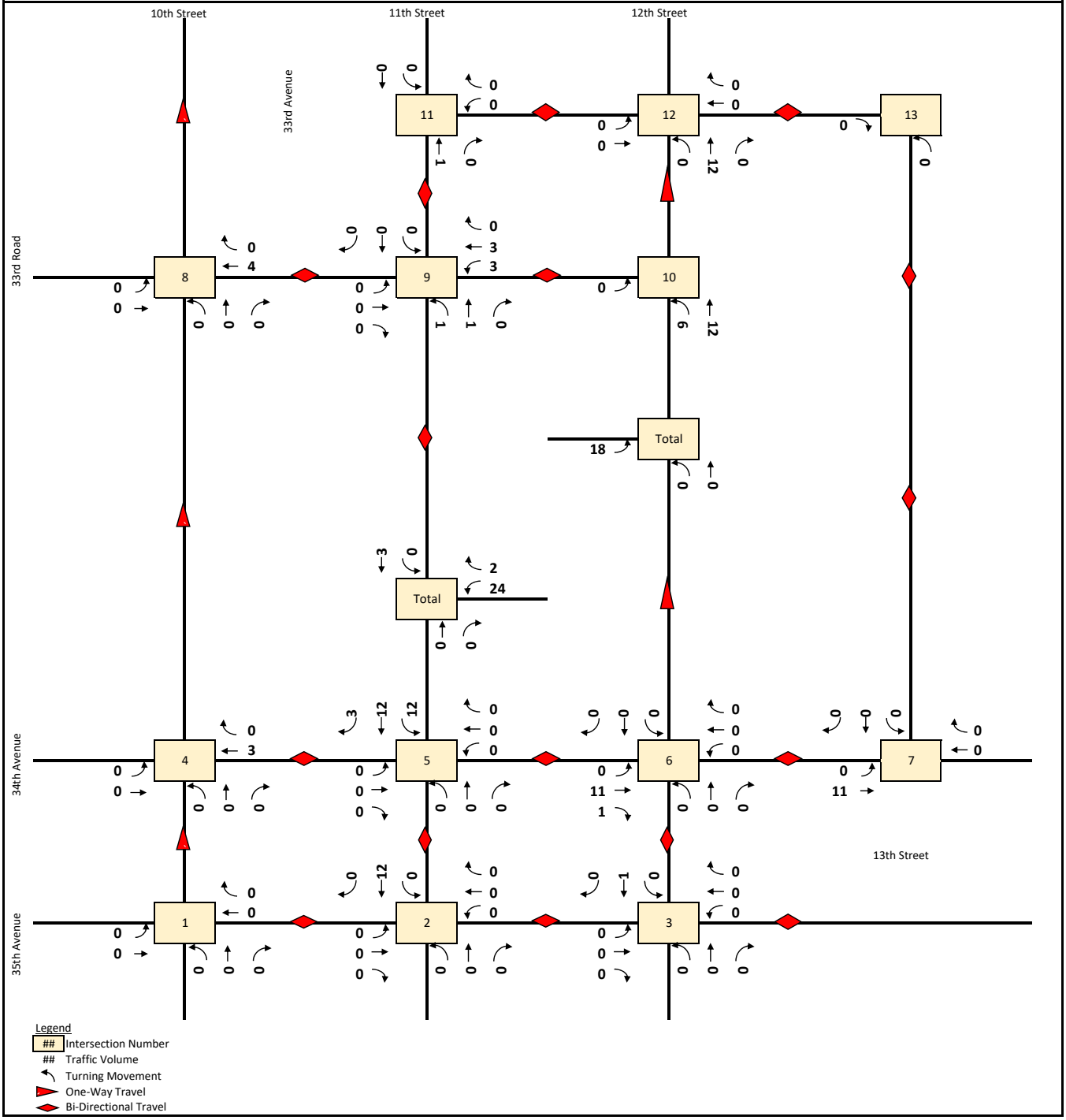

Saturday Midday - Total
Total

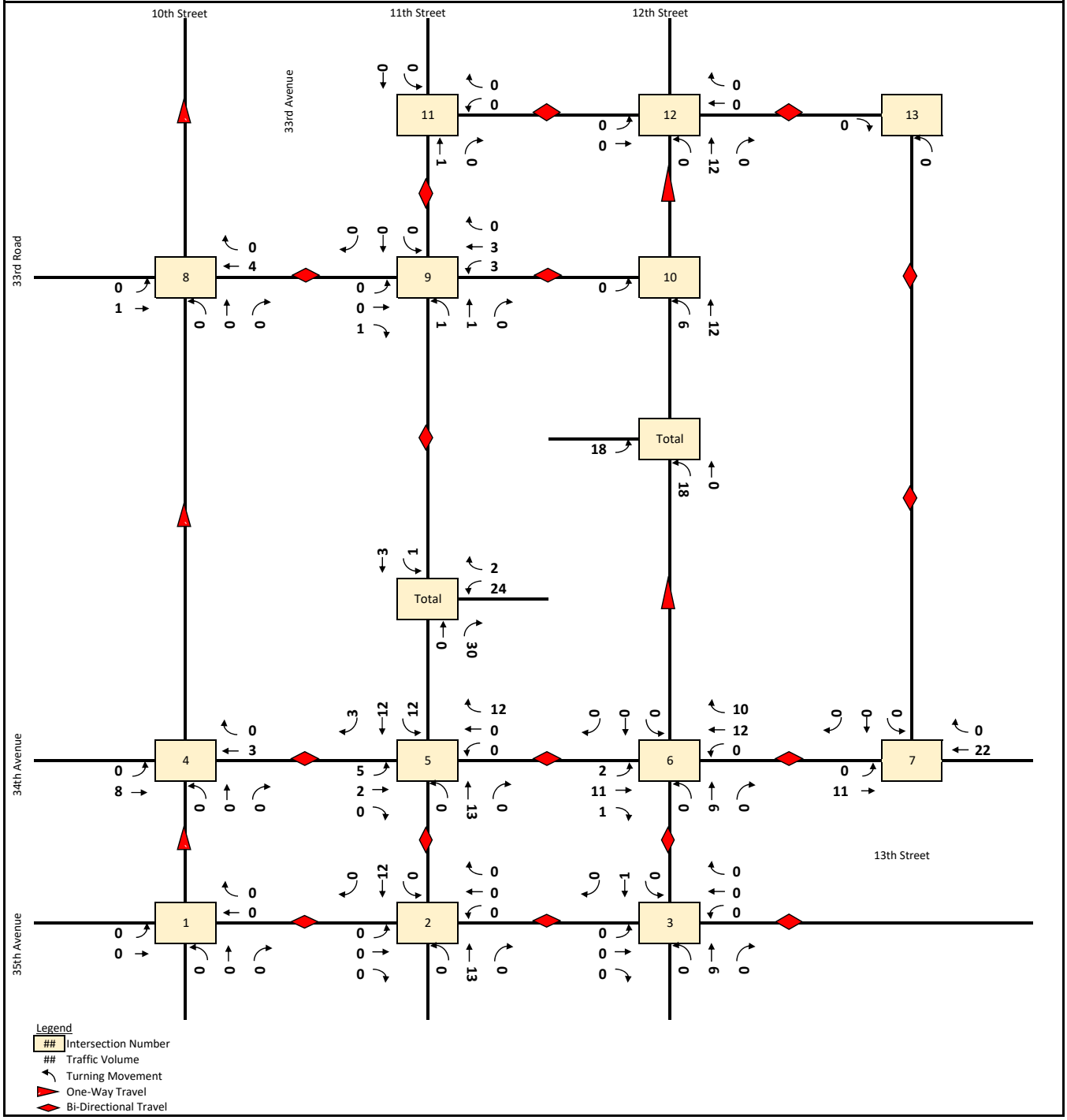

Weekday AM - Site 1
Inbound

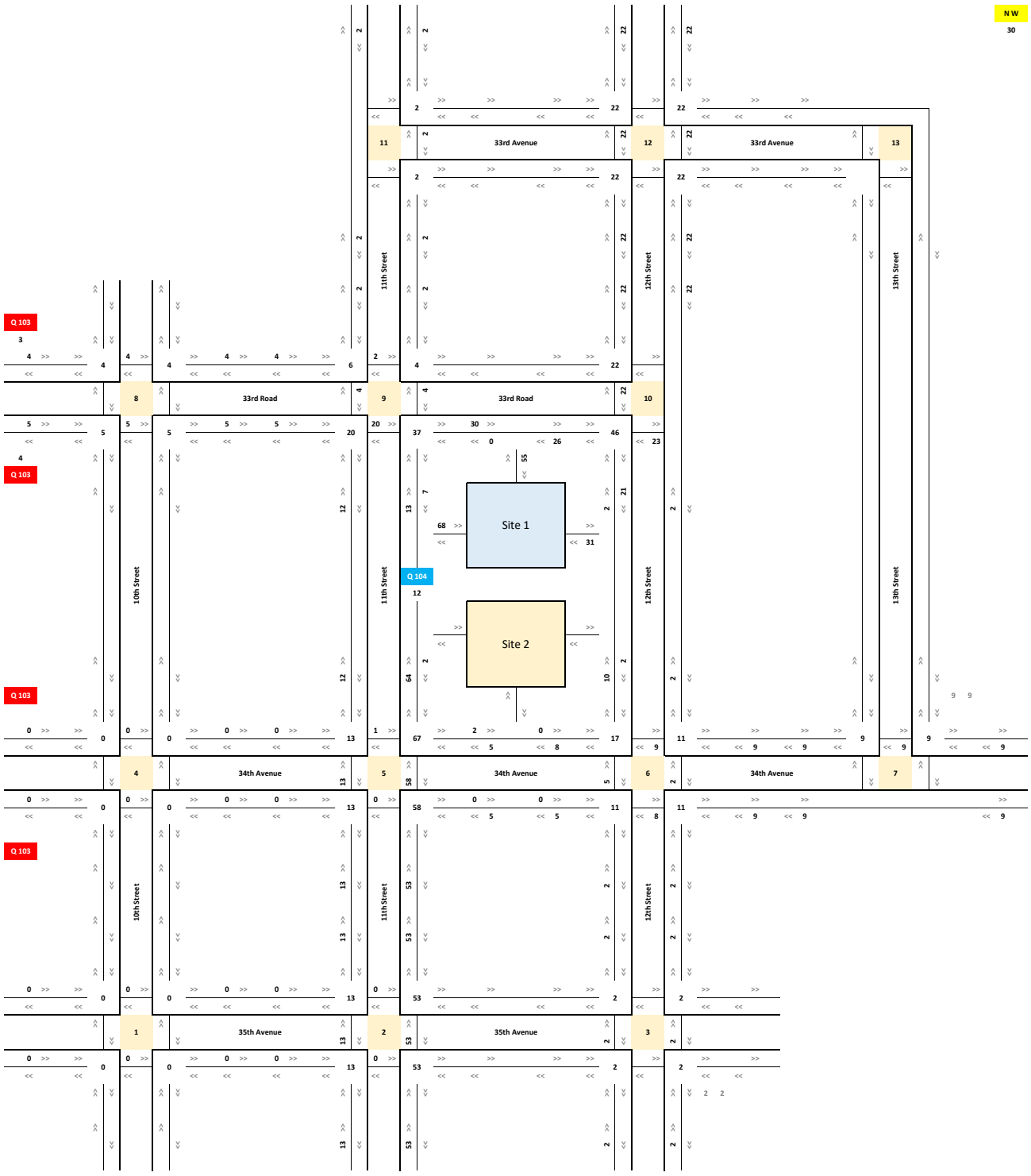

Weekday AM - Site 1
Outbound

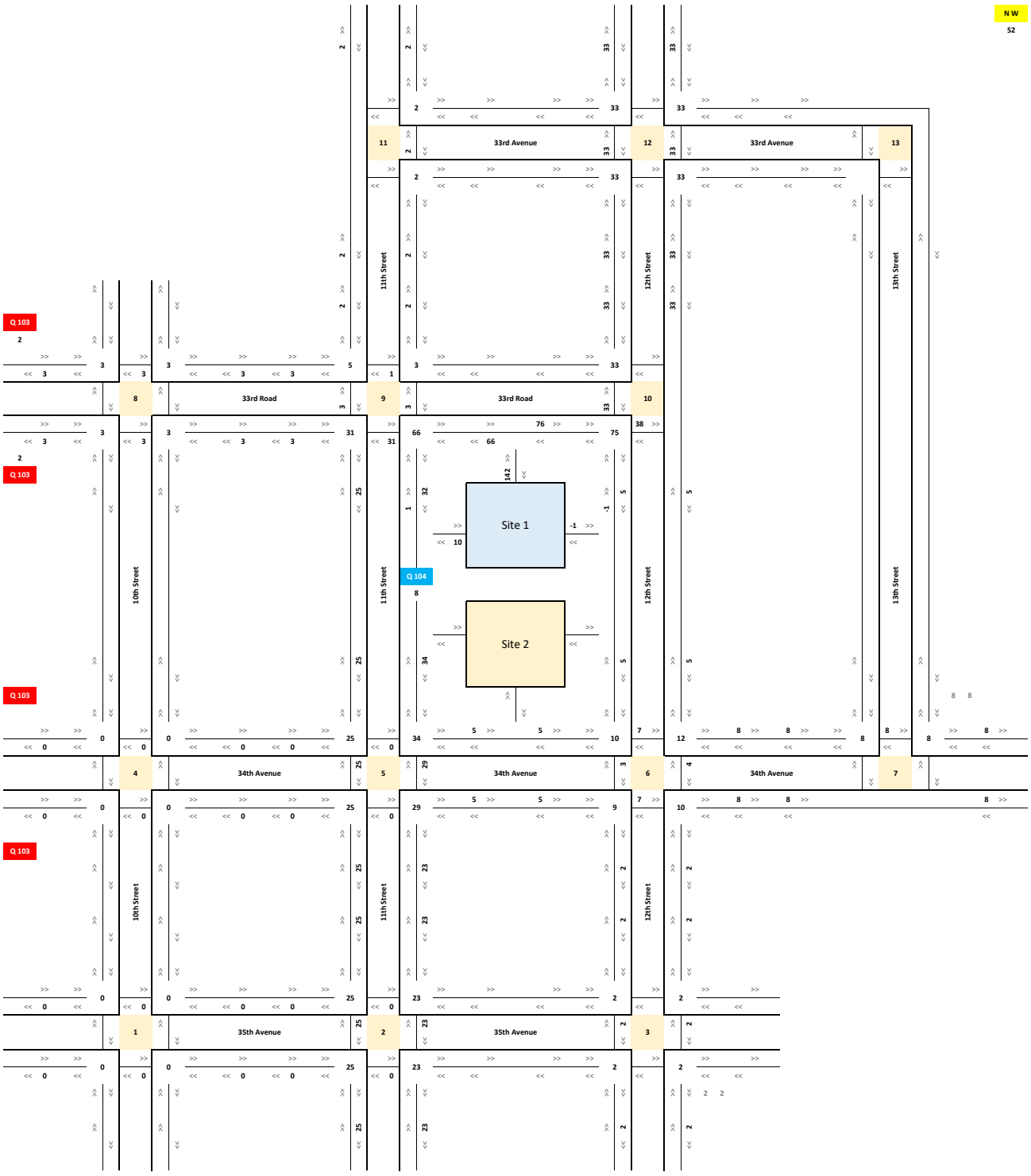

Legend

Intersection Number

>> Travel Direction

Movement Volume

Weekday AM - Site 1
Total

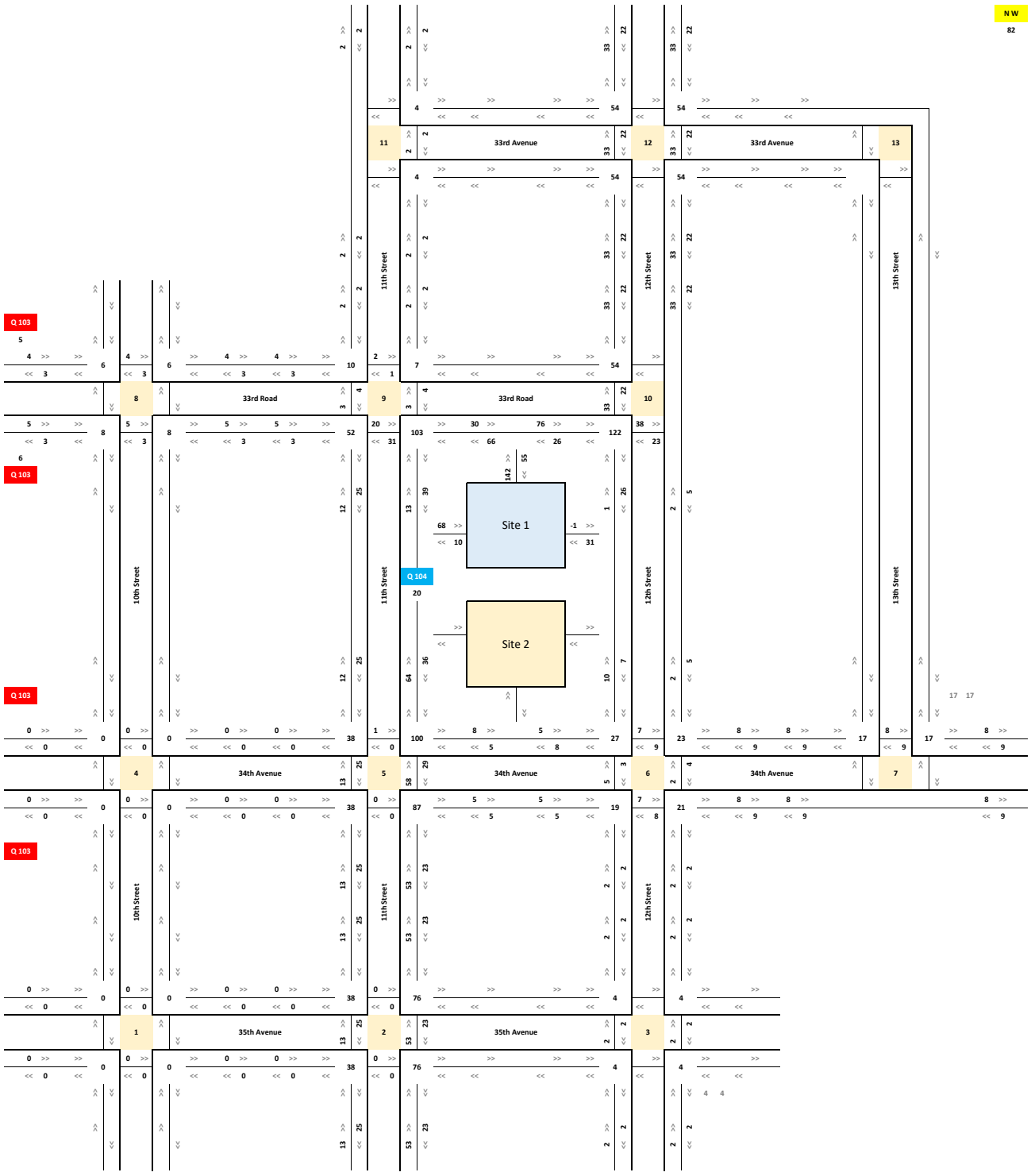

Legend

Intersection Number

>> Travel Direction

Movement Volume

Weekday AM - Site 2
Inbound

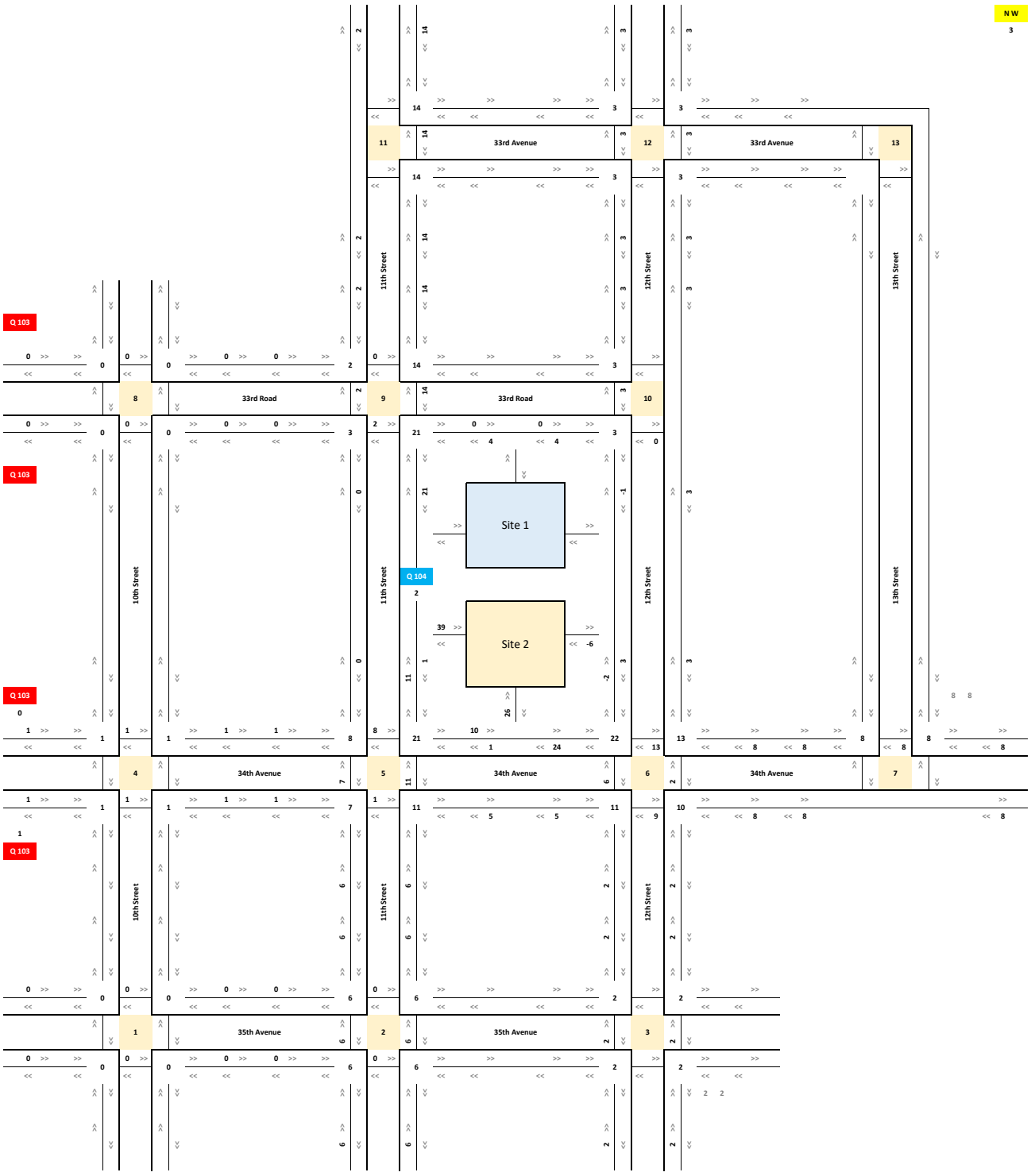

Legend

Intersection Number

>> Travel Direction

Movement Volume

Weekday AM - Site 2
Outbound

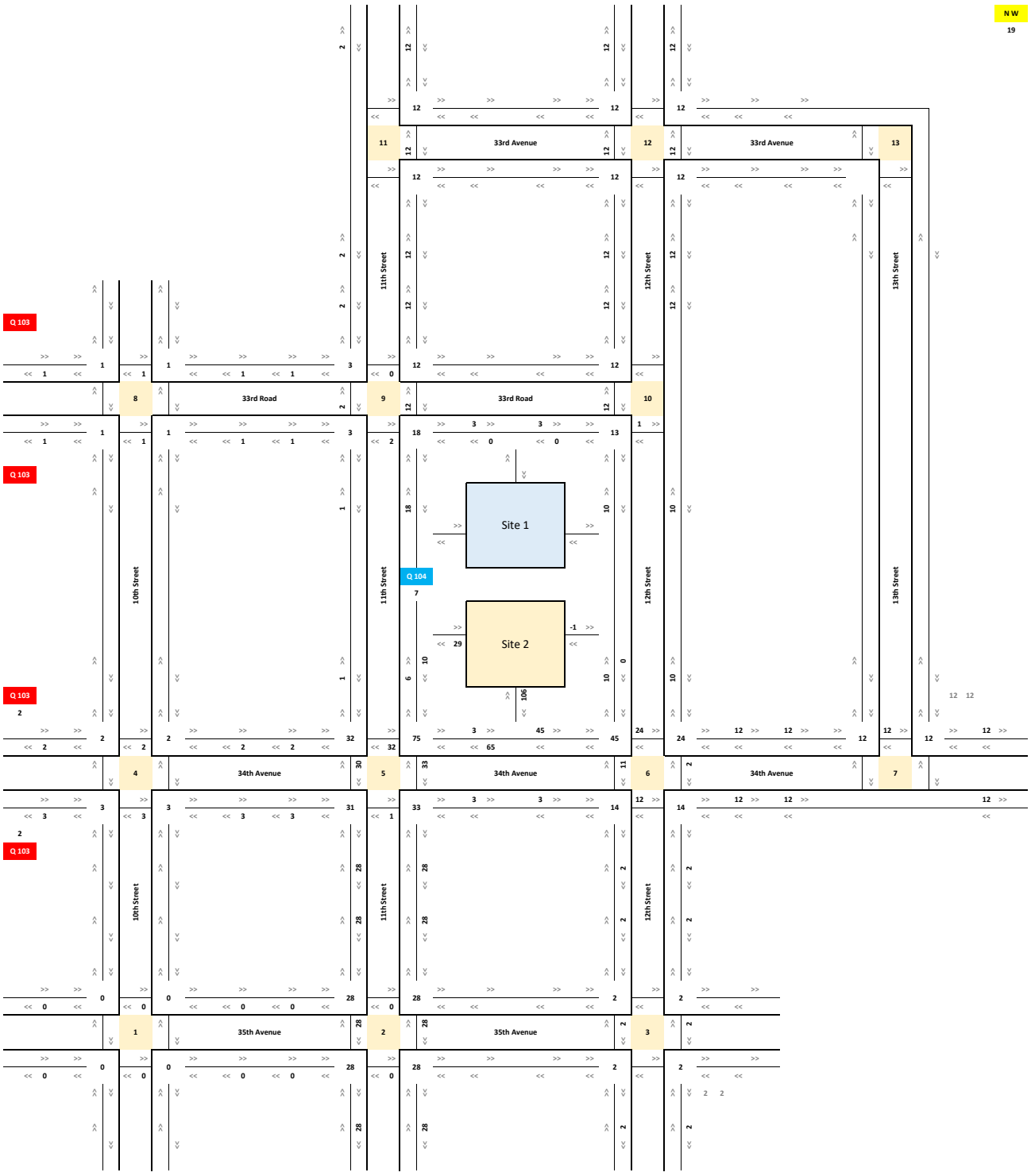

Weekday AM - Site 2
Total

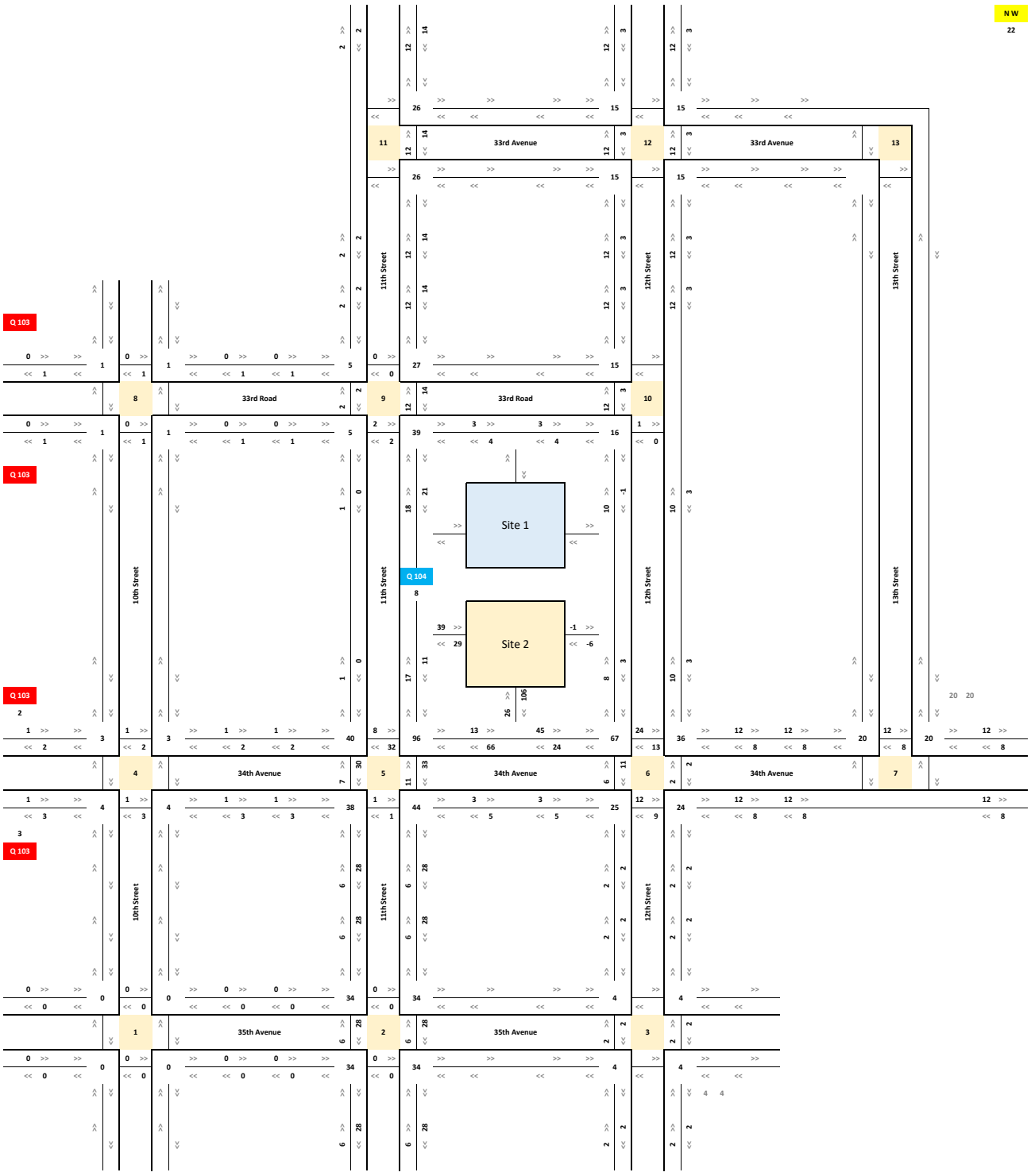

Legend

Intersection Number

>> Travel Direction

Movement Volume

Weekday AM - Total
Inbound

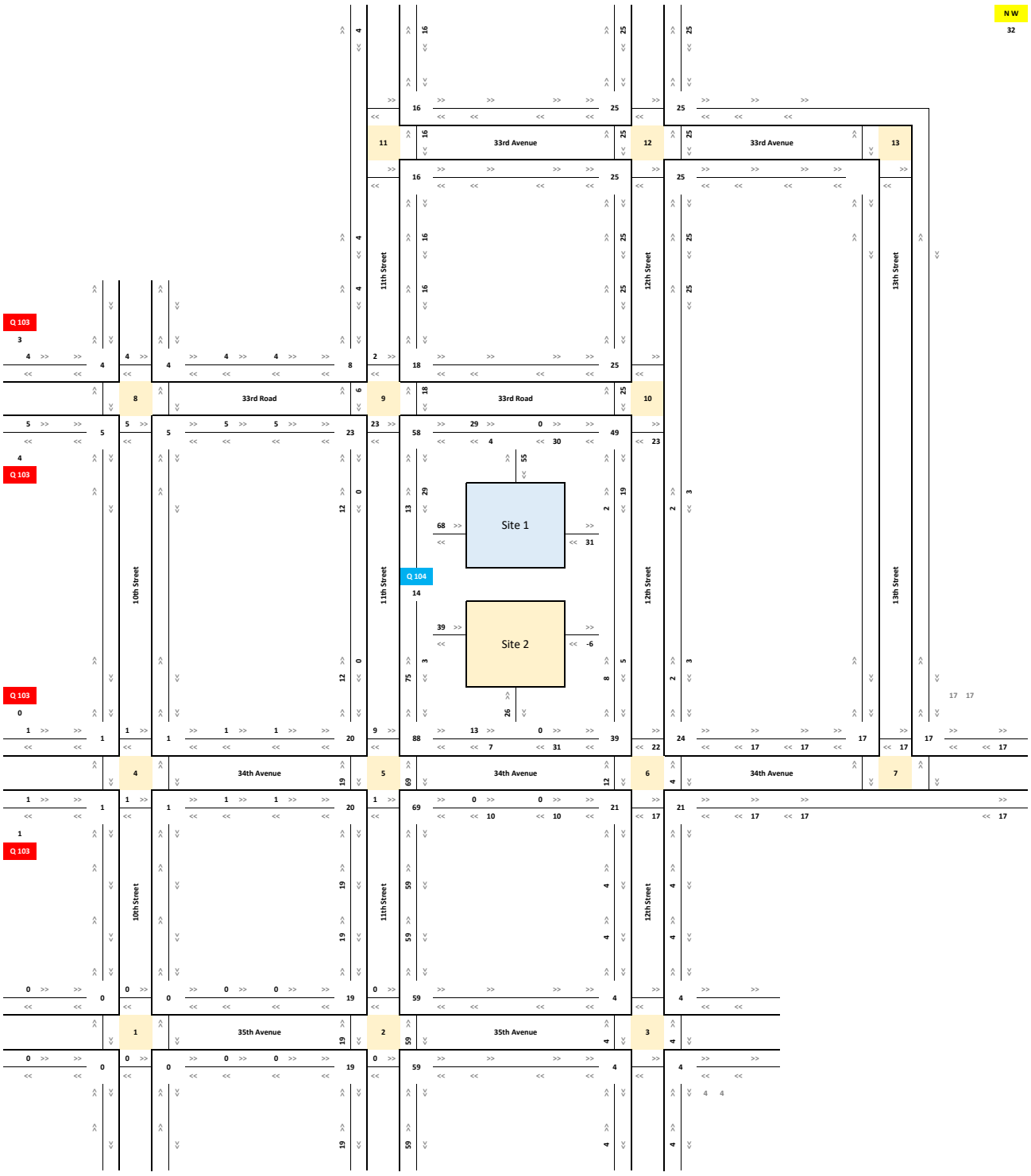

Legend

Intersection Number

>> Travel Direction

Movement Volume

Weekday AM - Total
Outbound

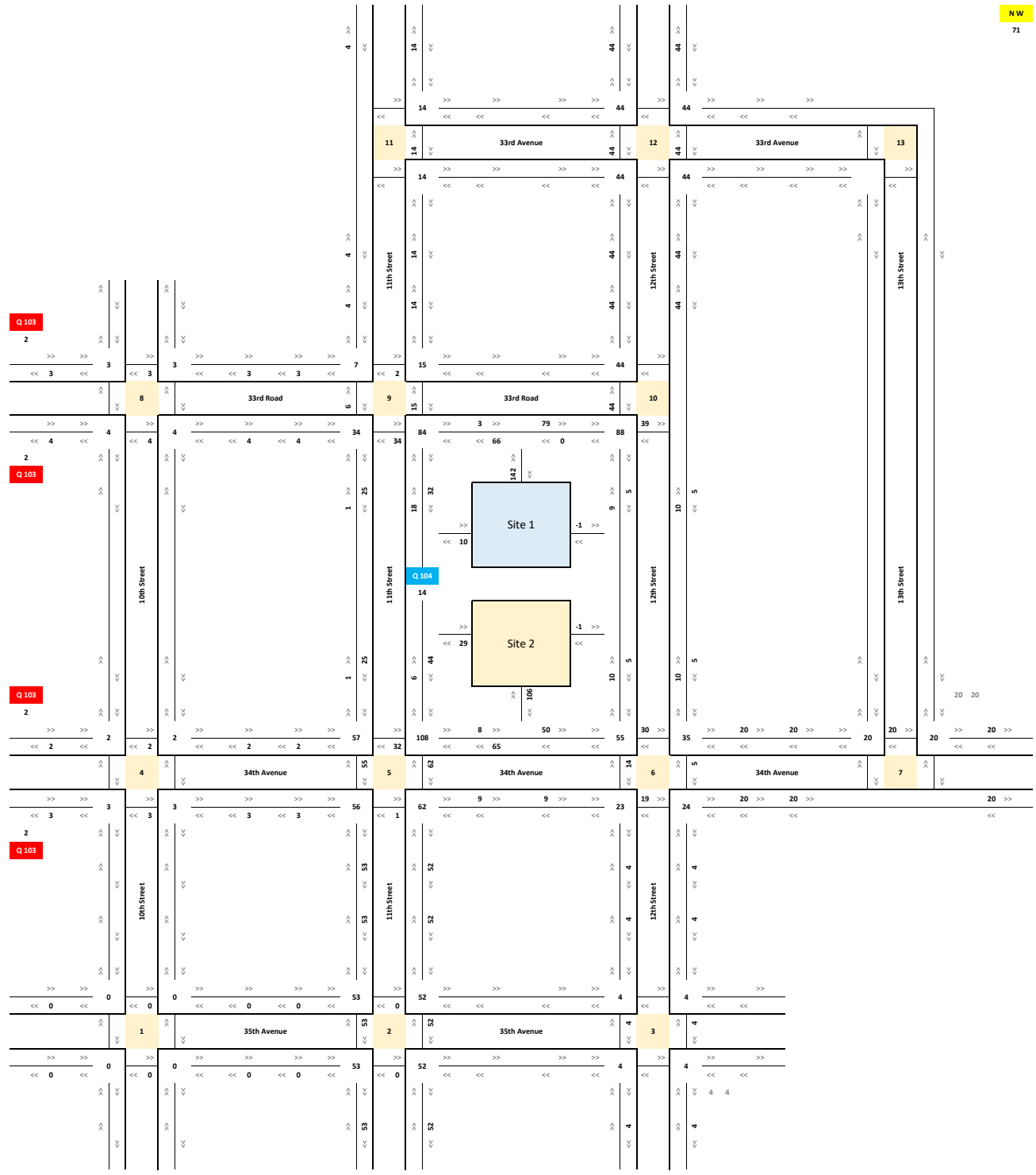

Legend

Intersection Number

>> Travel Direction

Movement Volume

Weekday AM - Total
Total

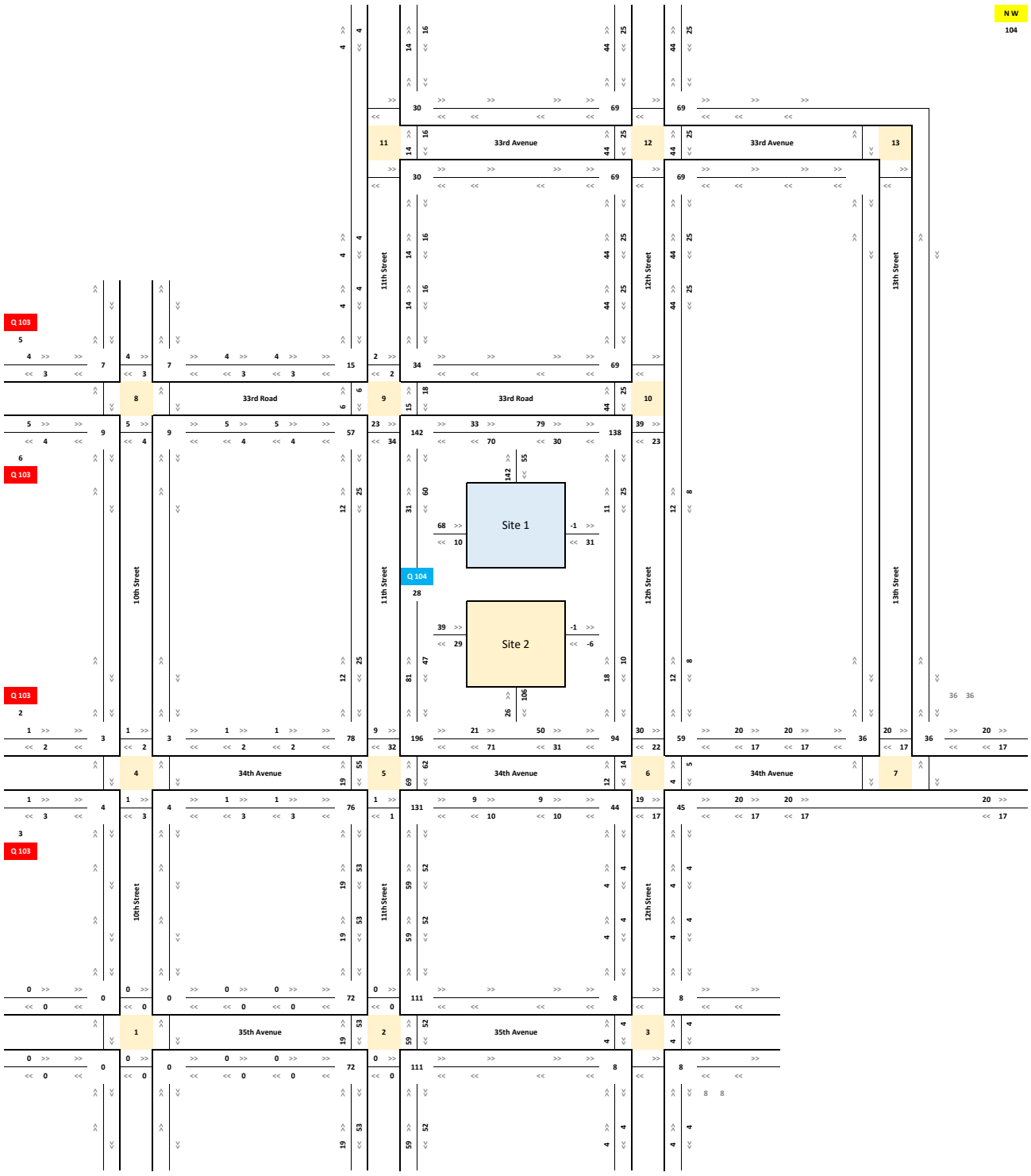

Legend

Intersection Number

>> Travel Direction

Movement Volume

Weekday Midday - Site 1
Inbound

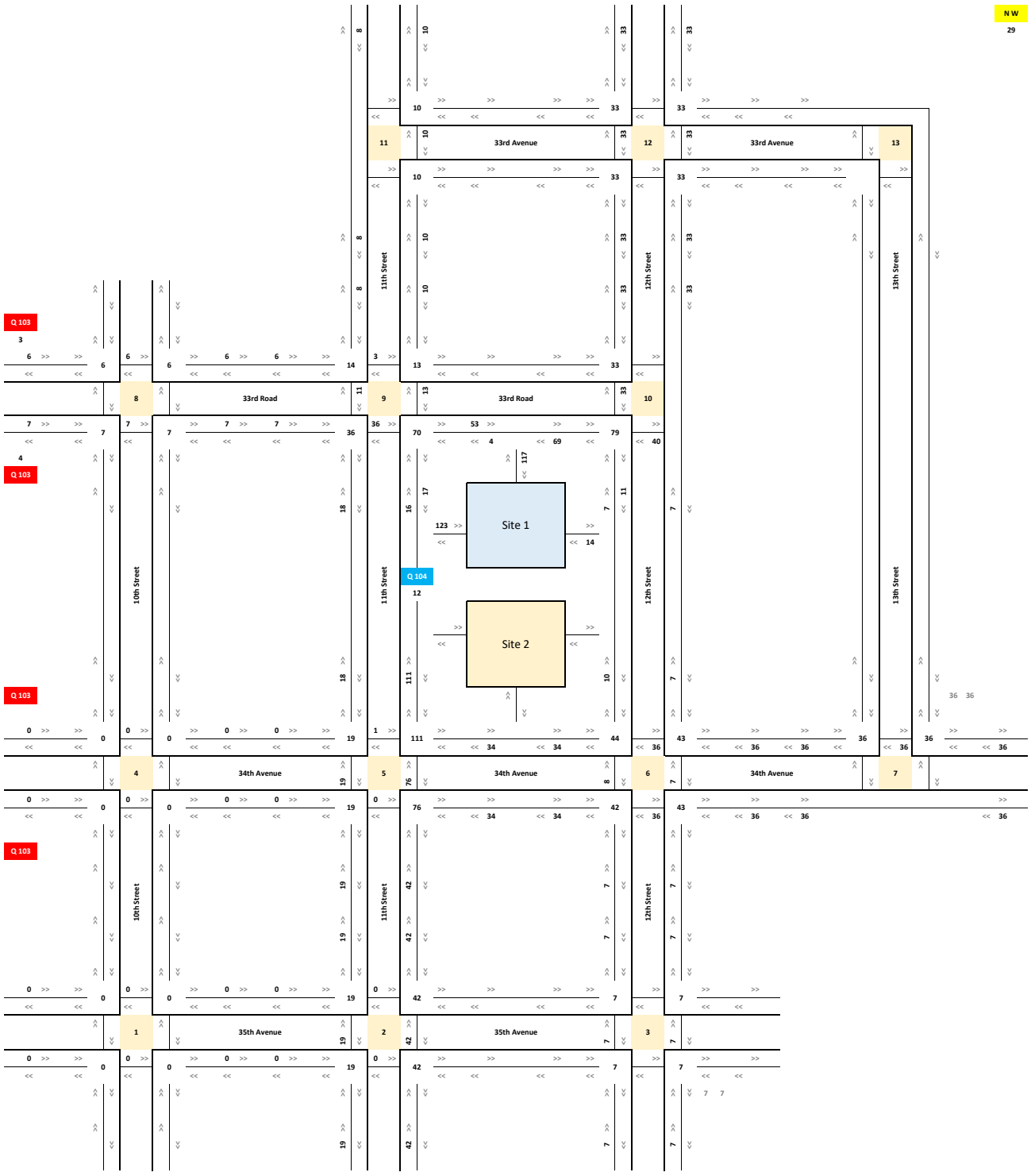

Weekday Midday - Site 1
Outbound

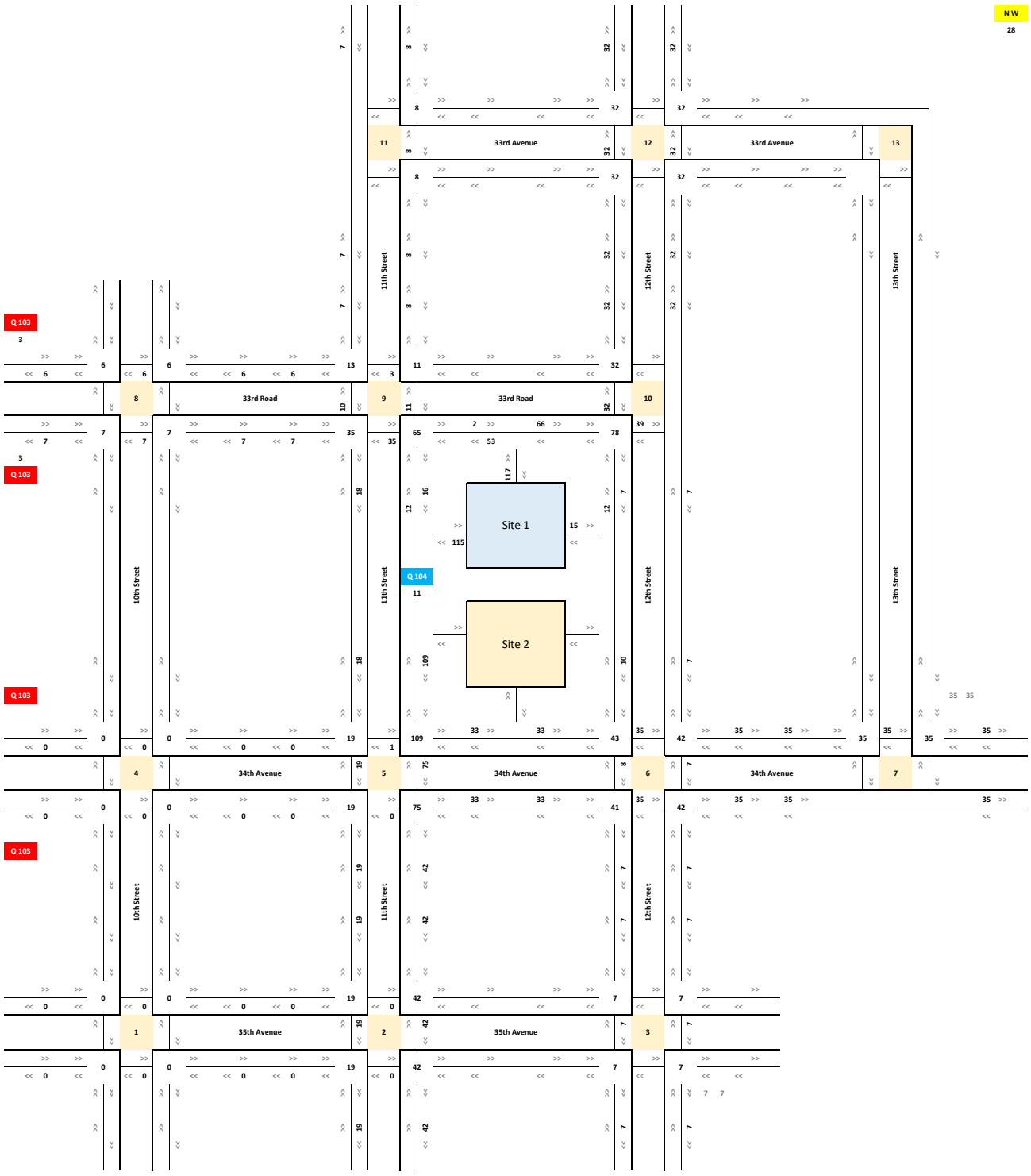

Legend

Intersection Number

>> Travel Direction

Movement Volume

Weekday Midday - Site 1
Total

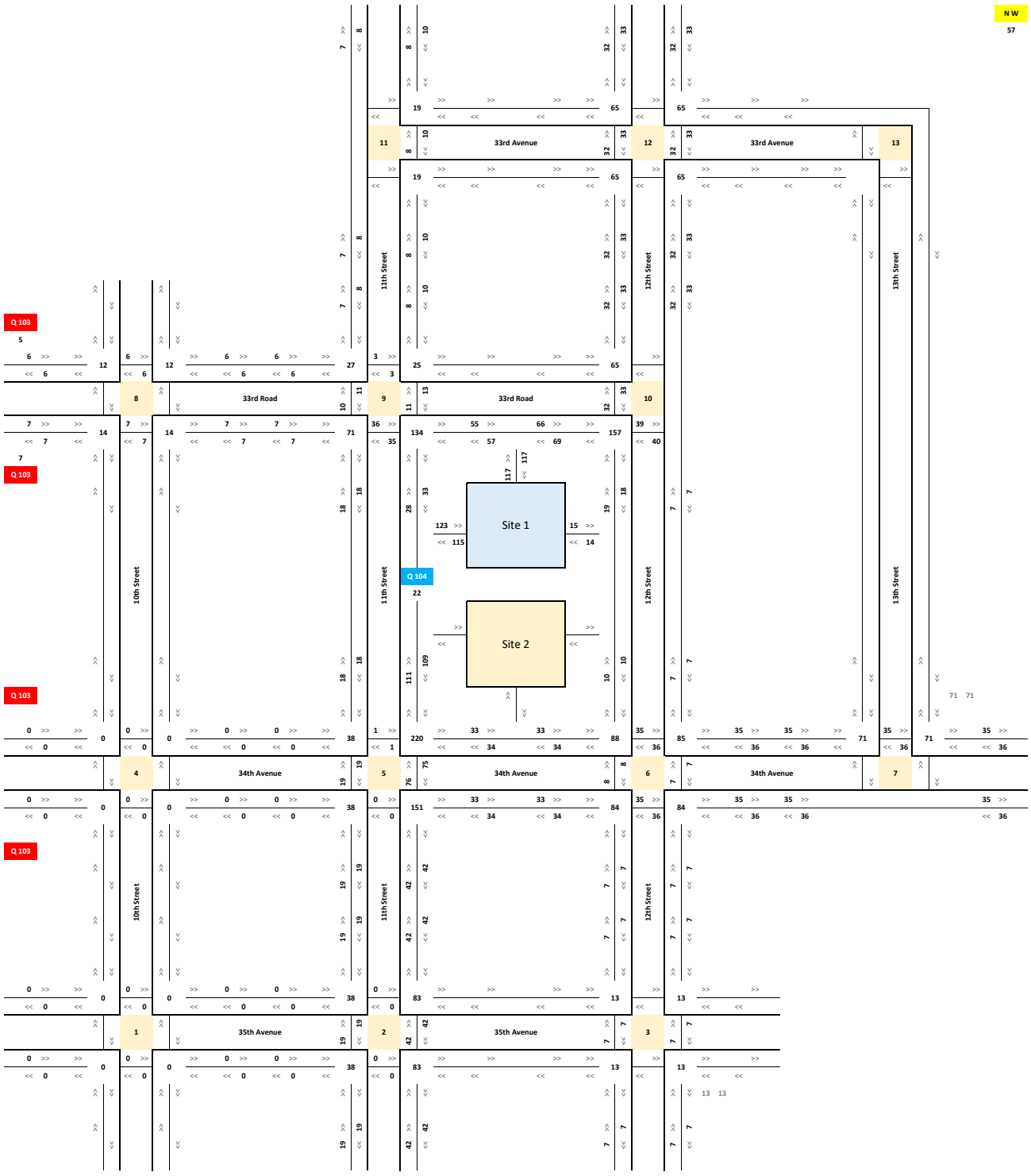

Legend

Intersection Number

>> Travel Direction

Movement Volume

Weekday Midday - Site 2
Inbound

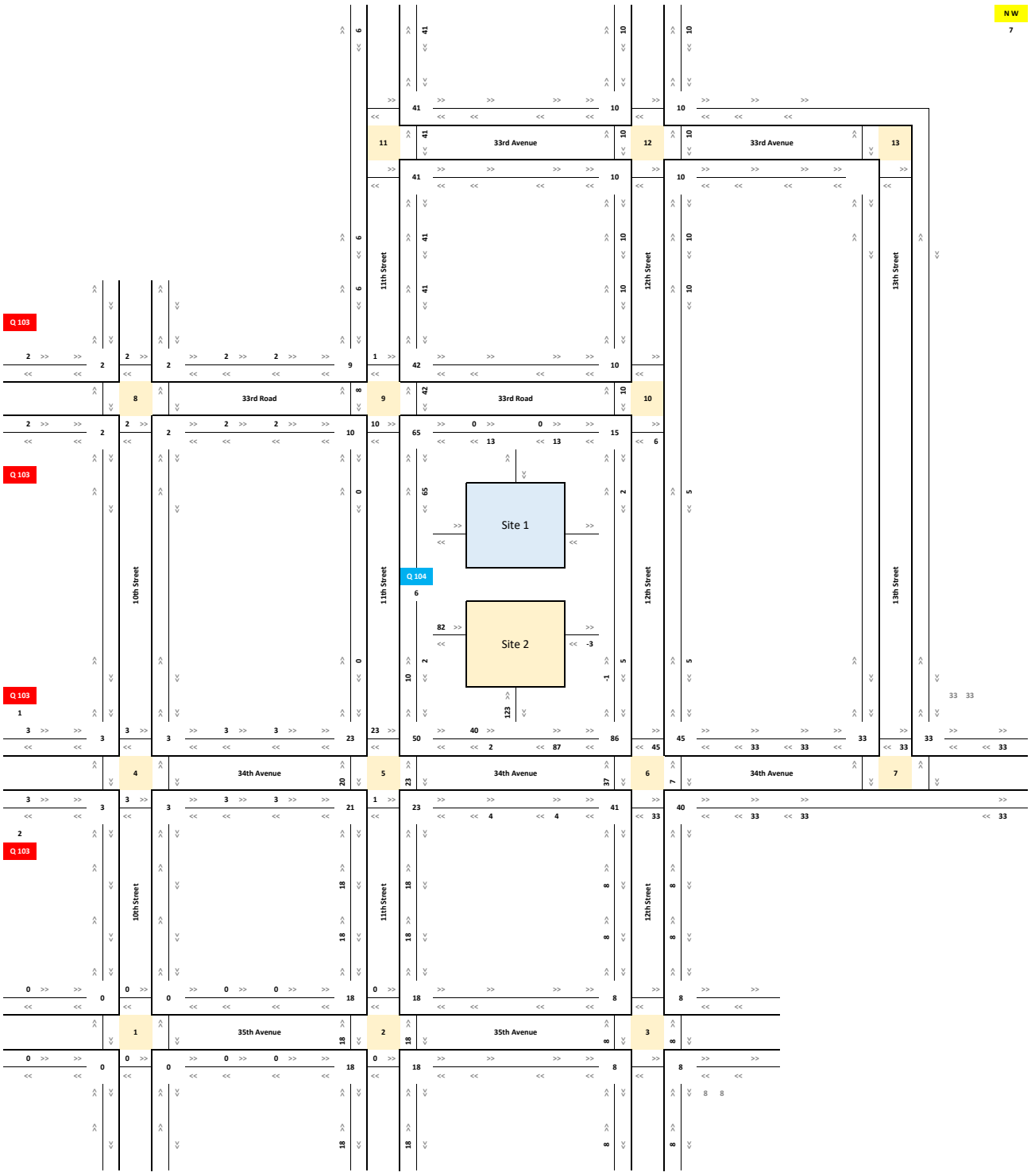

Legend

Intersection Number

>> Travel Direction

Movement Volume

Weekday Midday - Site 2
Outbound

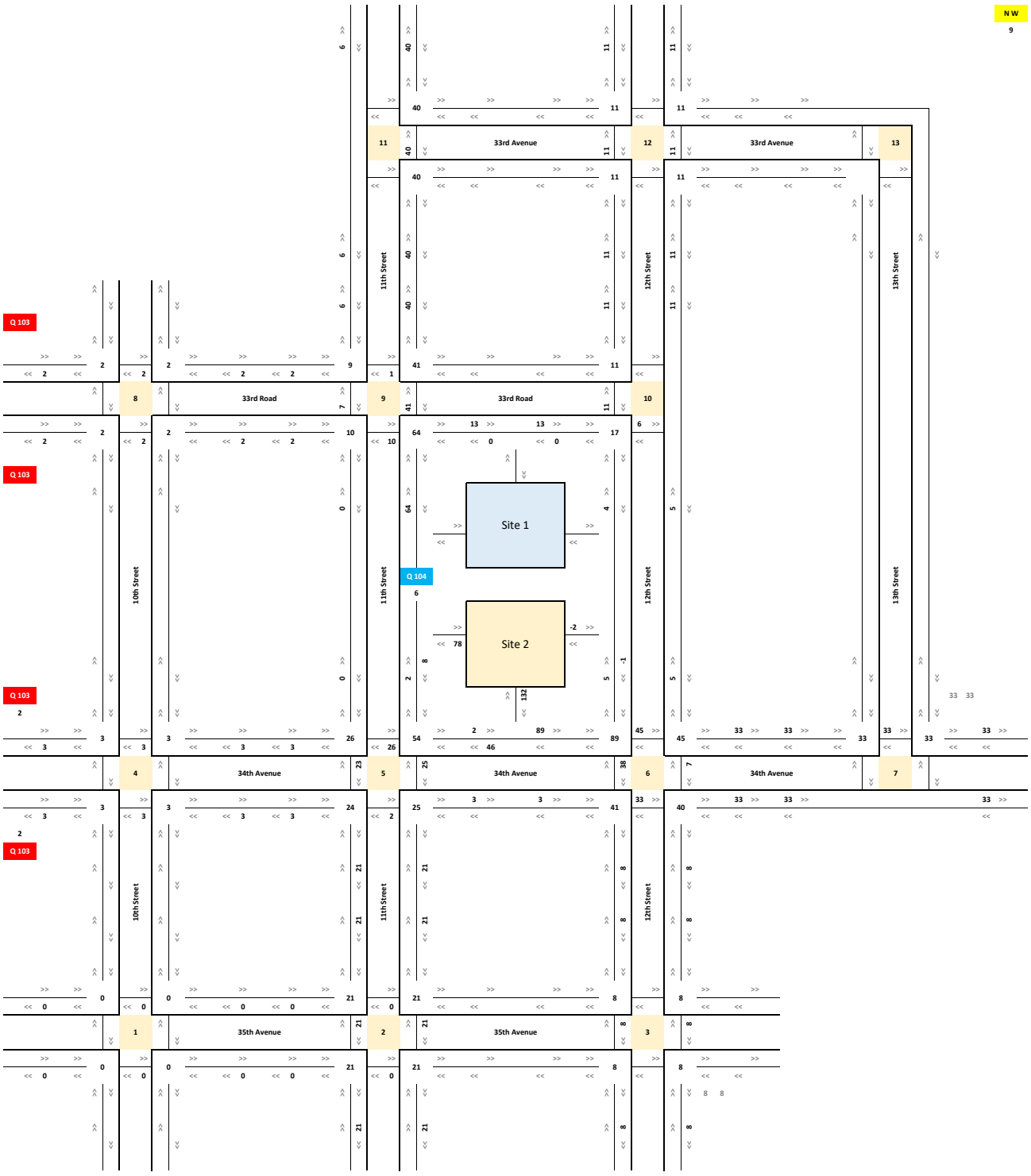

Legend

Intersection Number

>> Travel Direction

Movement Volume

Weekday Midday - Site 2
Total

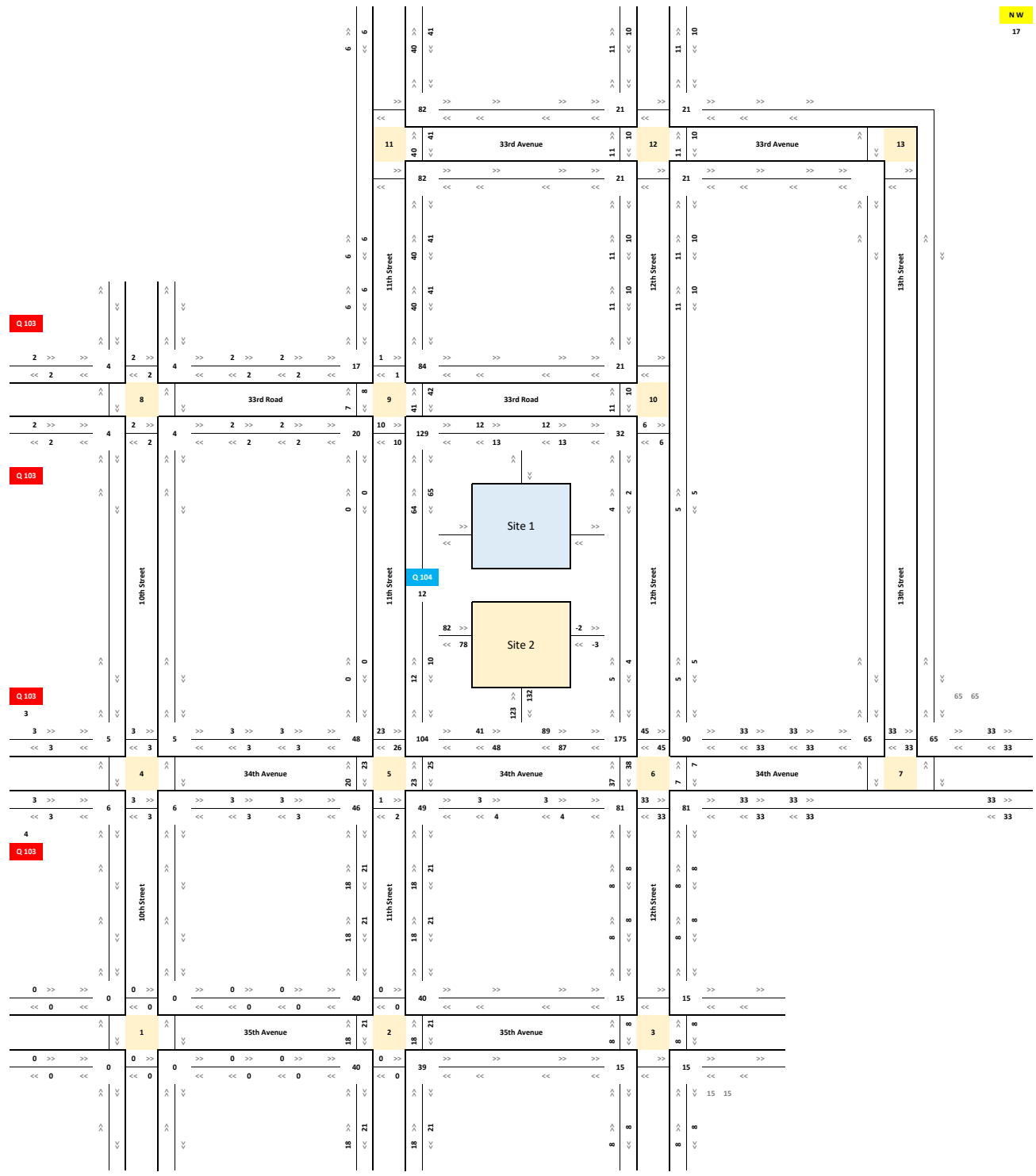

Legend

Intersection Number

>> Travel Direction

Movement Volume

Weekday Midday - Total
Inbound

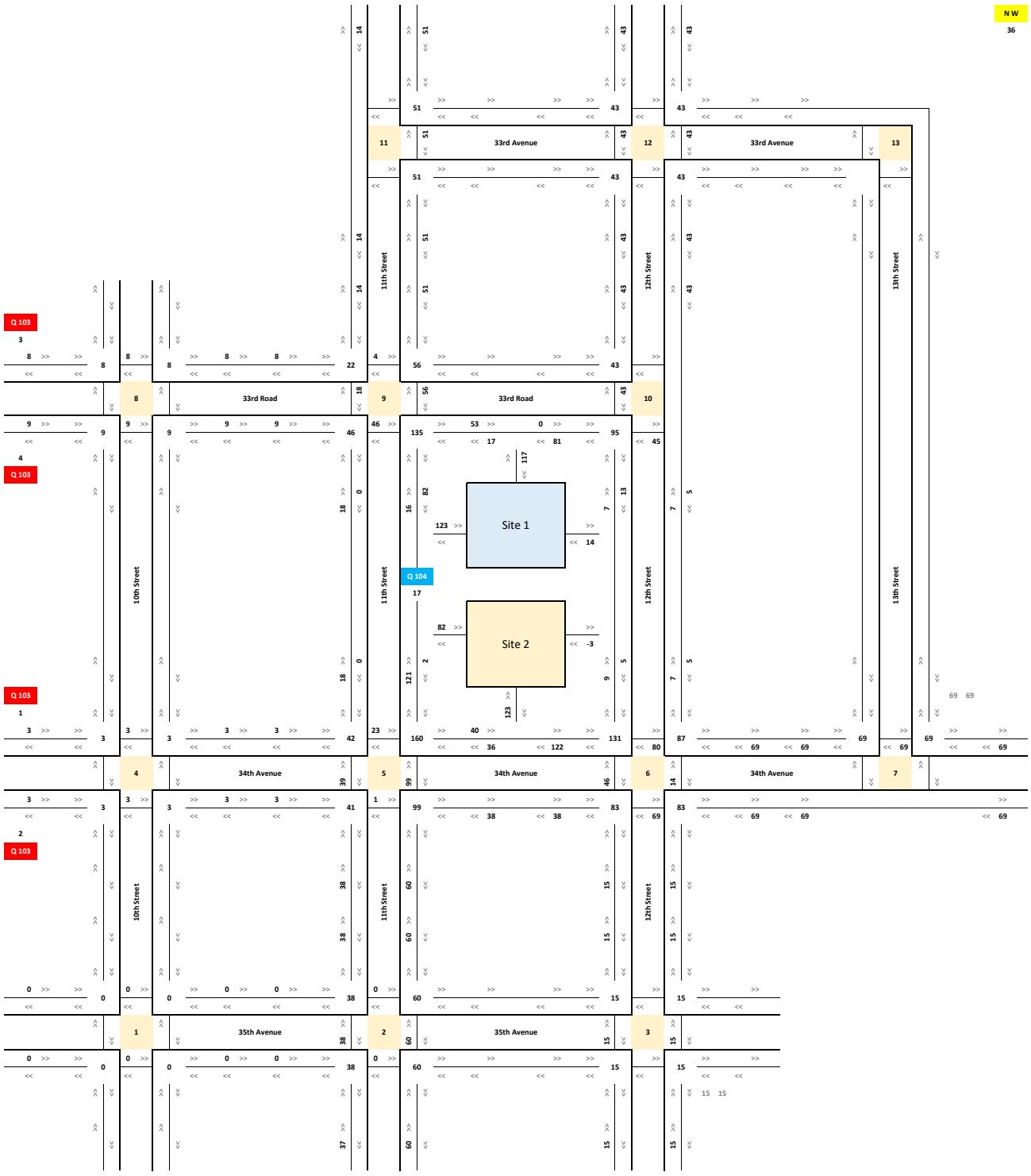

Legend

Intersection Number

>> Travel Direction

Movement Volume

Weekday Midday - Total
Outbound

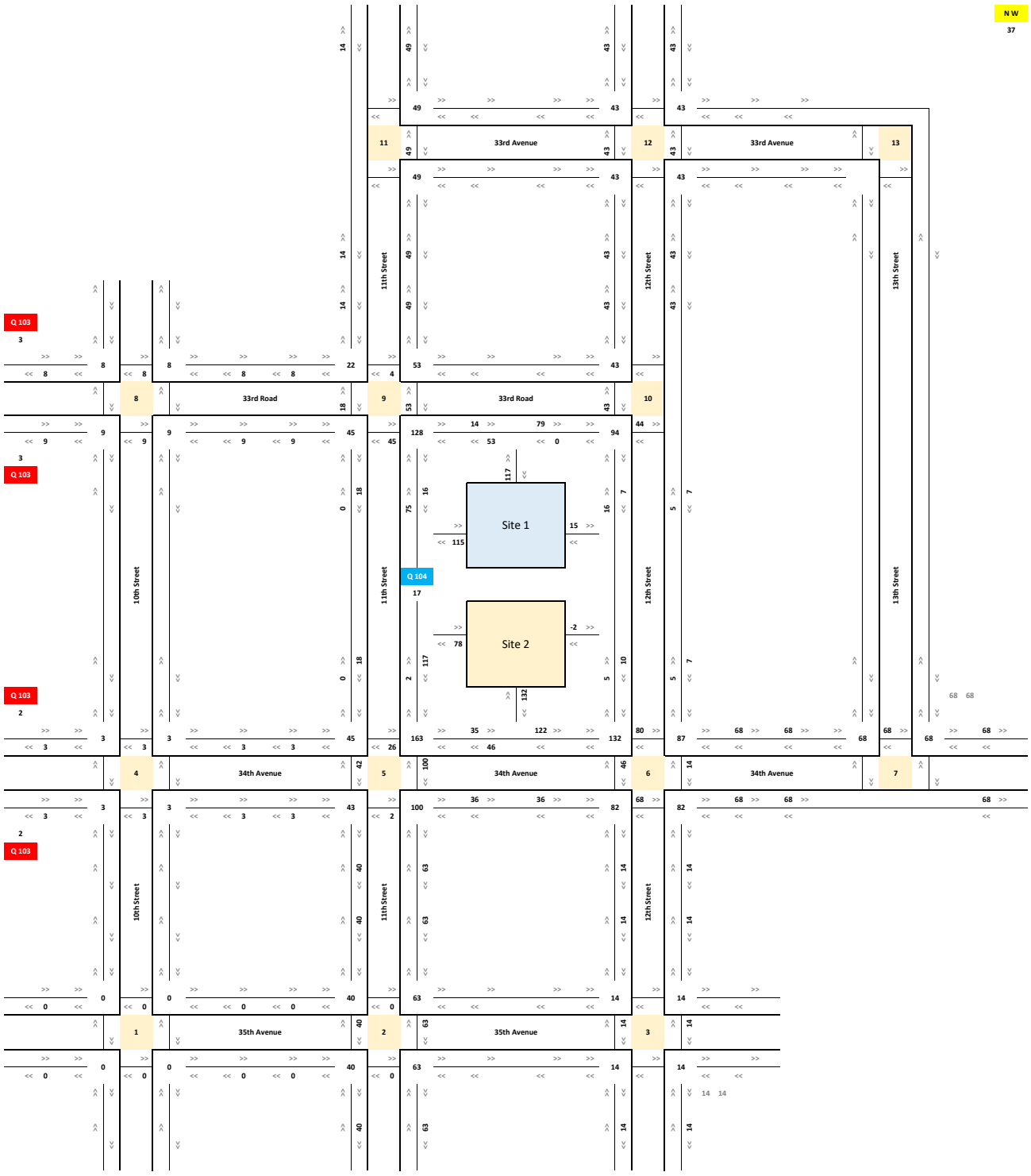

Legend

Intersection Number

>> Travel Direction

Movement Volume

Weekday Midday - Total
Total

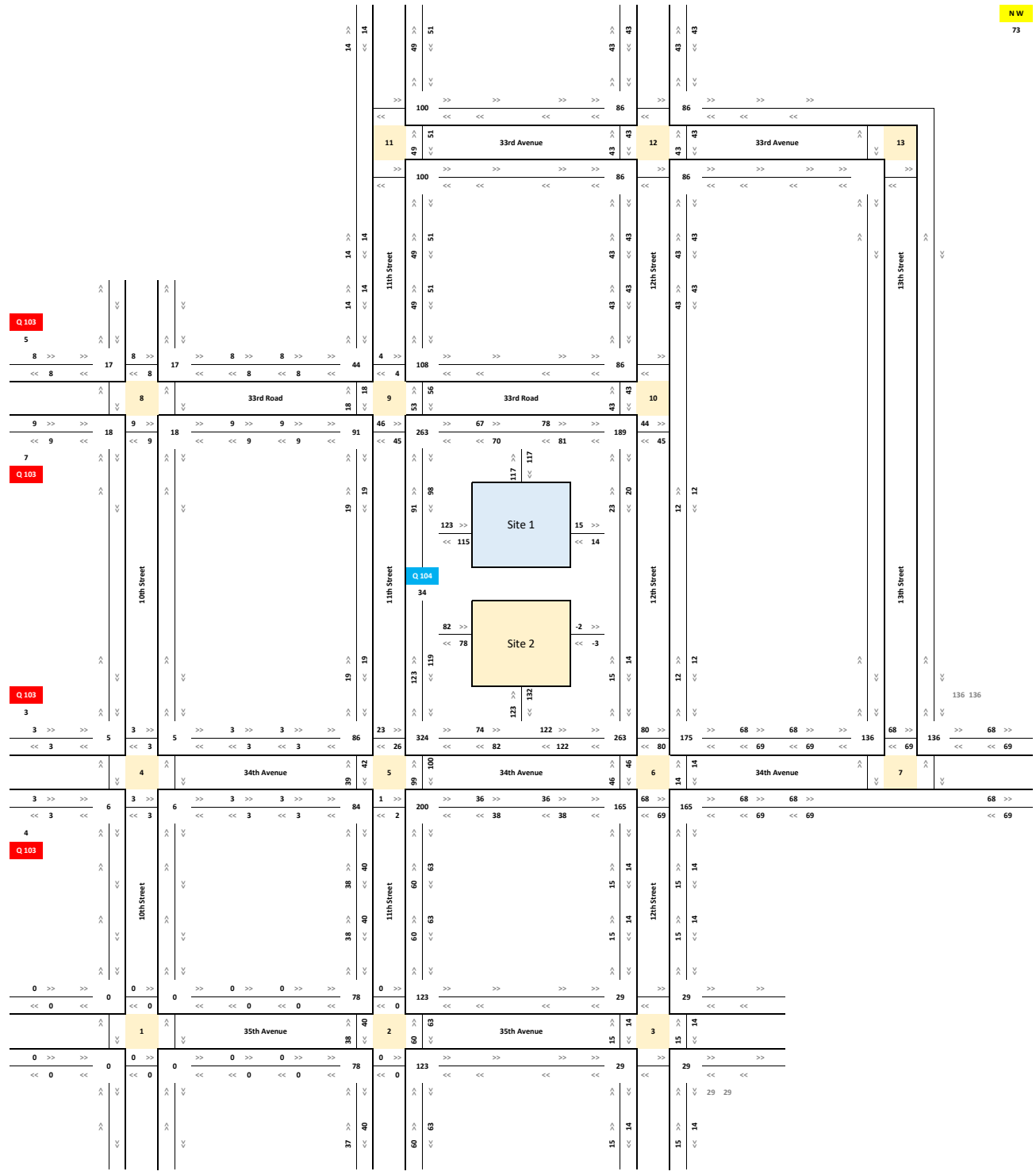

Legend

Intersection Number

>> Travel Direction

Movement Volume

Weekday PM - Site 1
Inbound

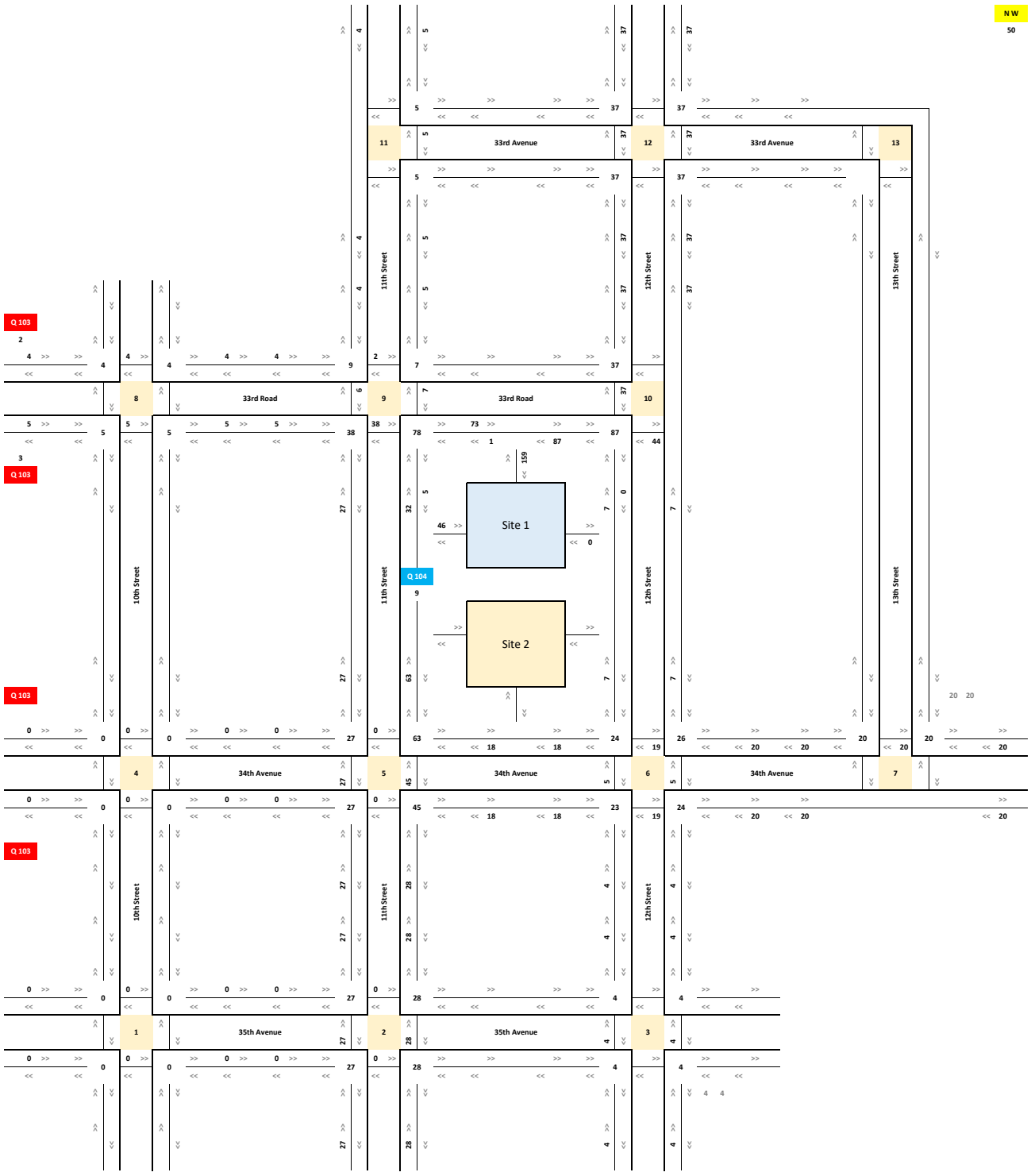

Legend

Intersection Number

>> Travel Direction

Movement Volume

Weekday PM - Site 1
Outbound

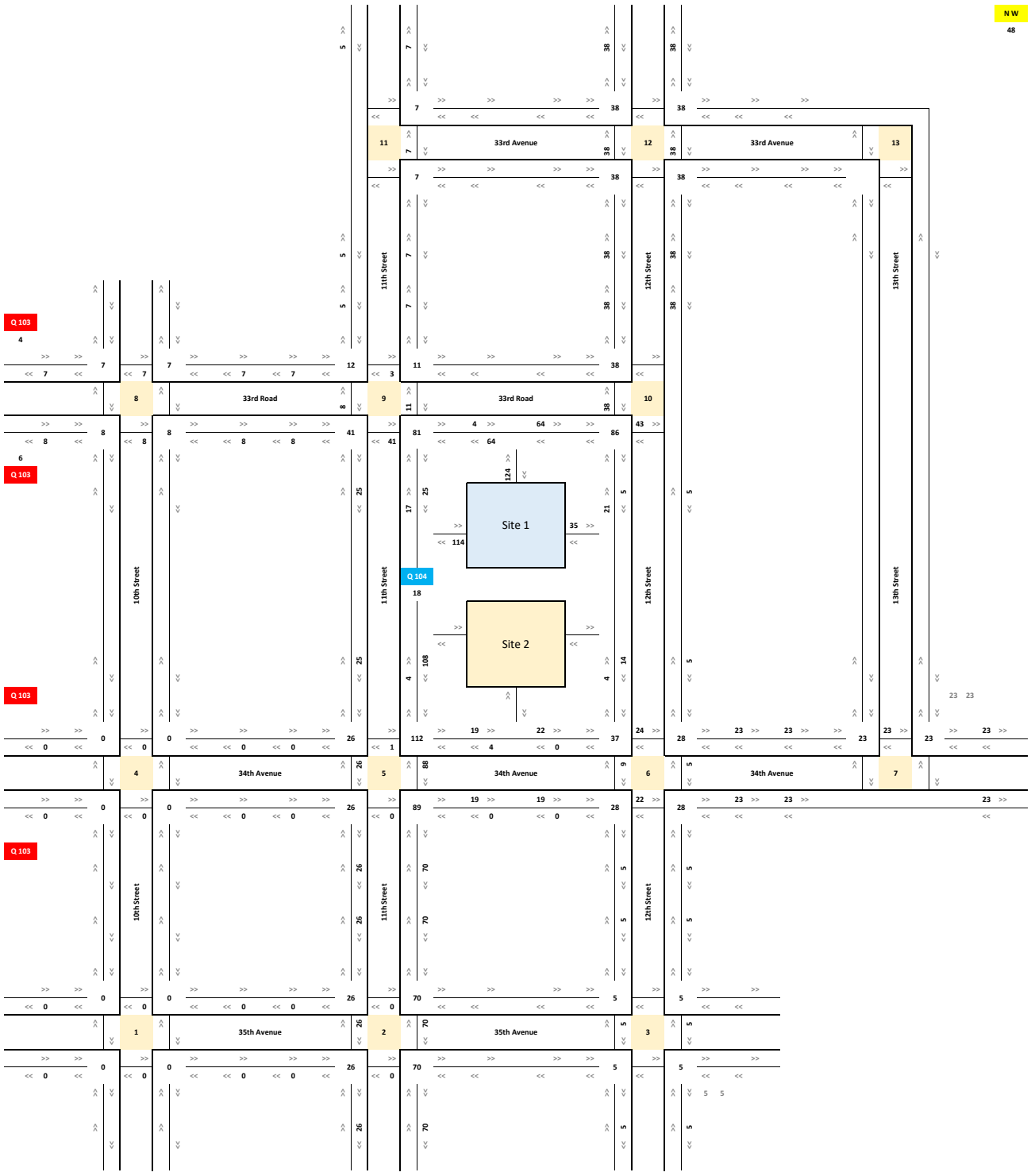

Weekday PM - Site 1
Total

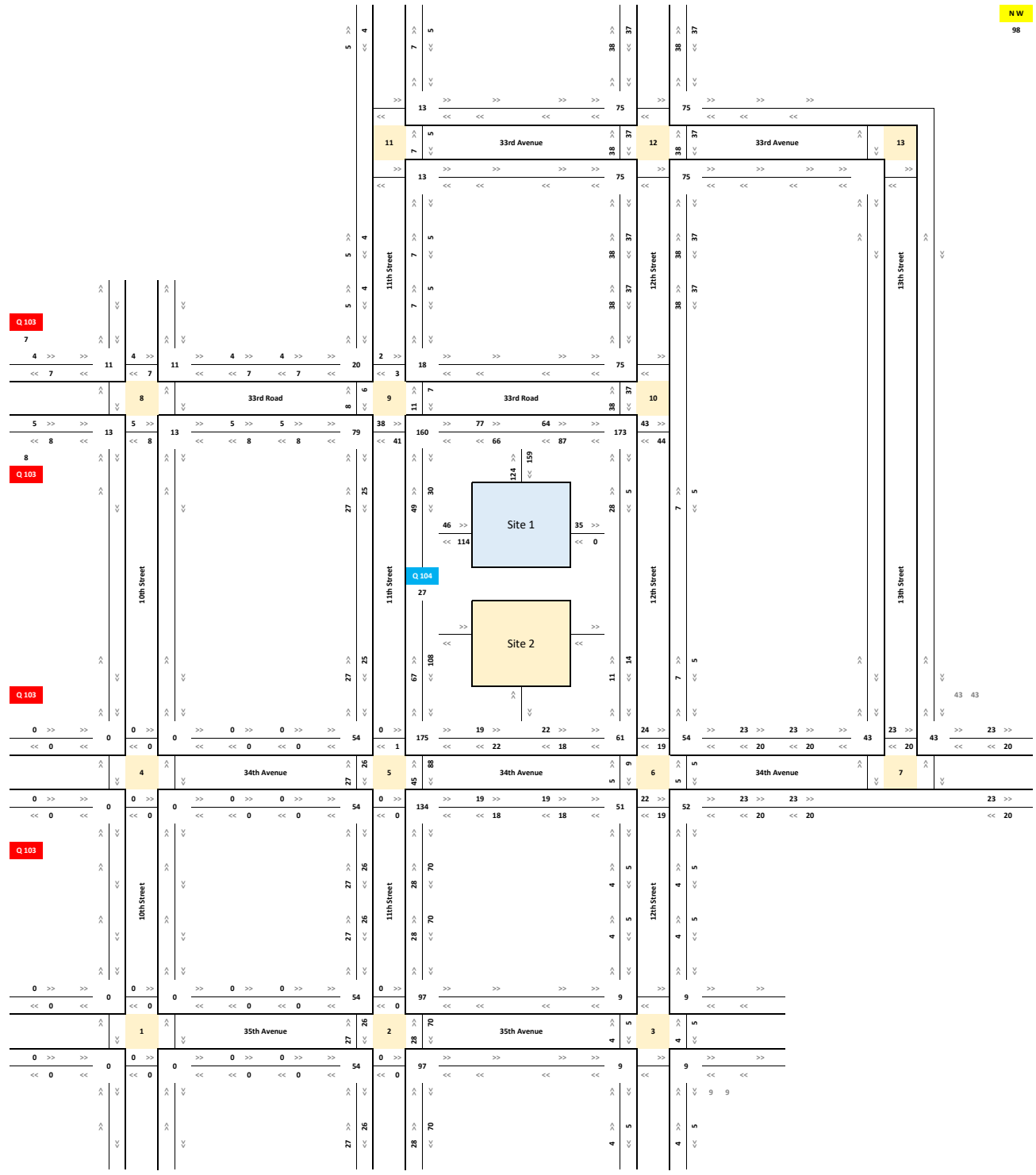

Legend

Intersection Number

>> Travel Direction

Movement Volume

Weekday PM - Site 2
Inbound

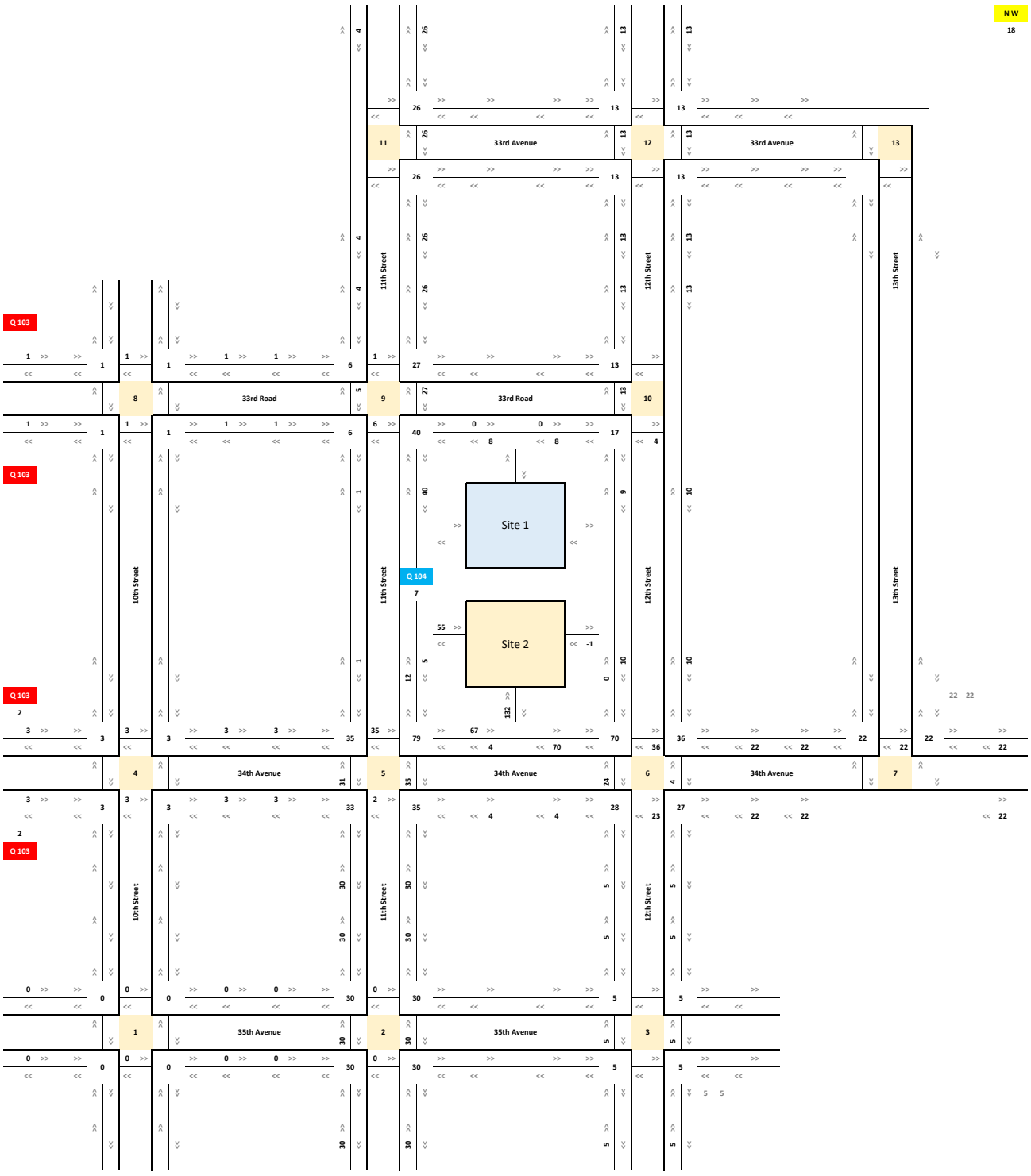

Legend

Intersection Number

>> Travel Direction

Movement Volume

Weekday PM - Site 2
Outbound

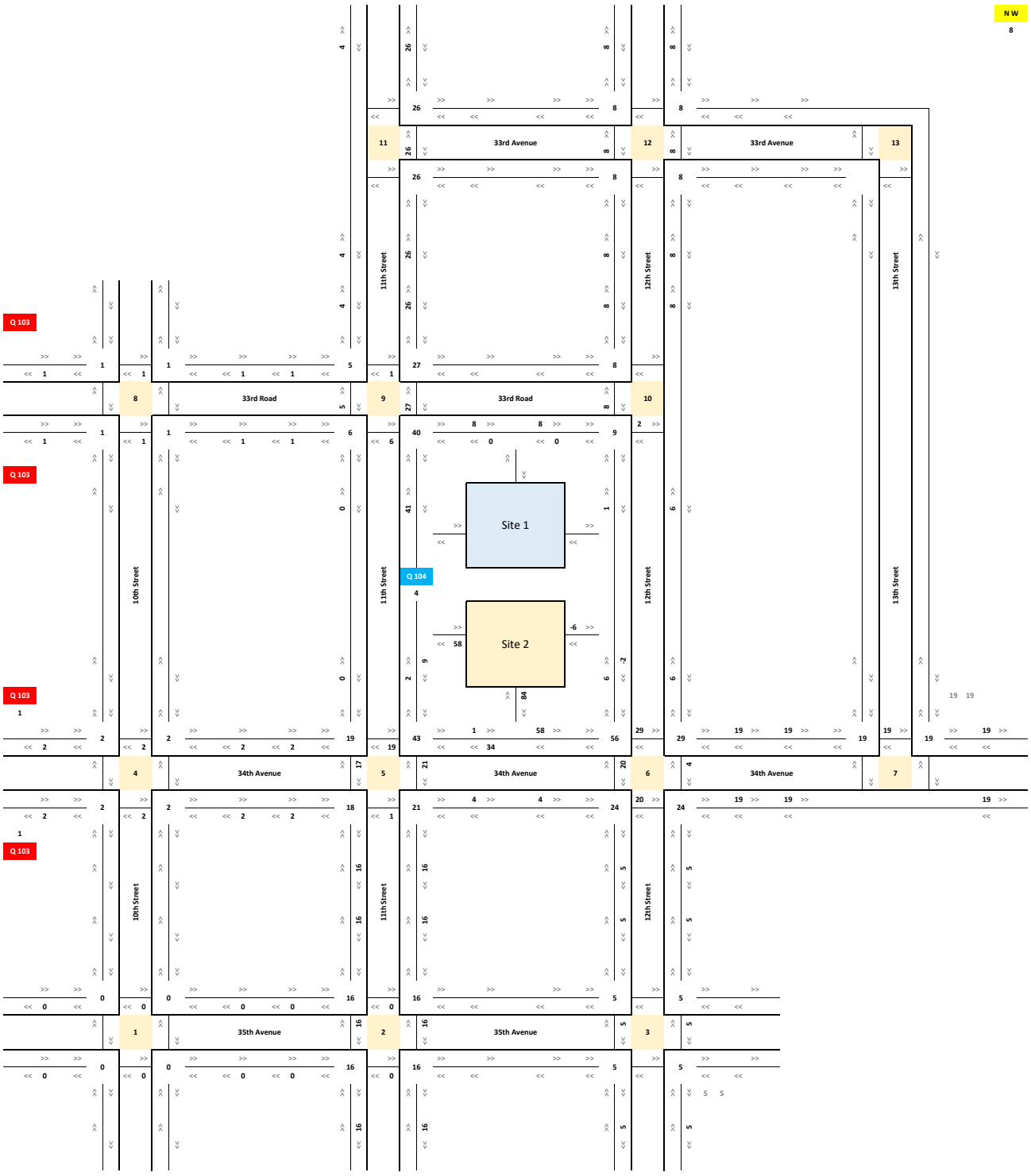

Weekday PM - Site 2
Total

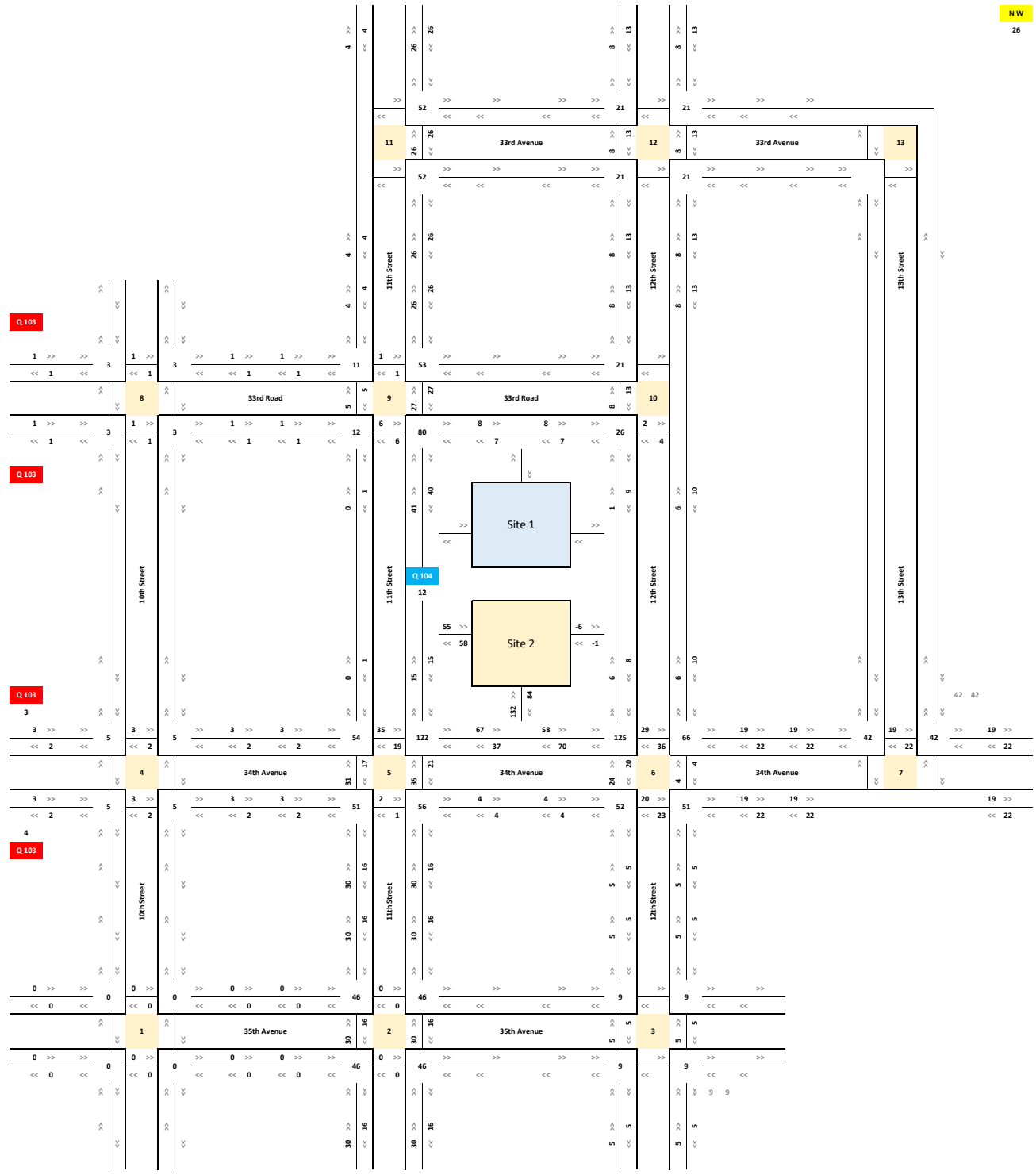

Legend

Intersection Number

>> Travel Direction

Movement Volume

Weekday PM - Total
Inbound

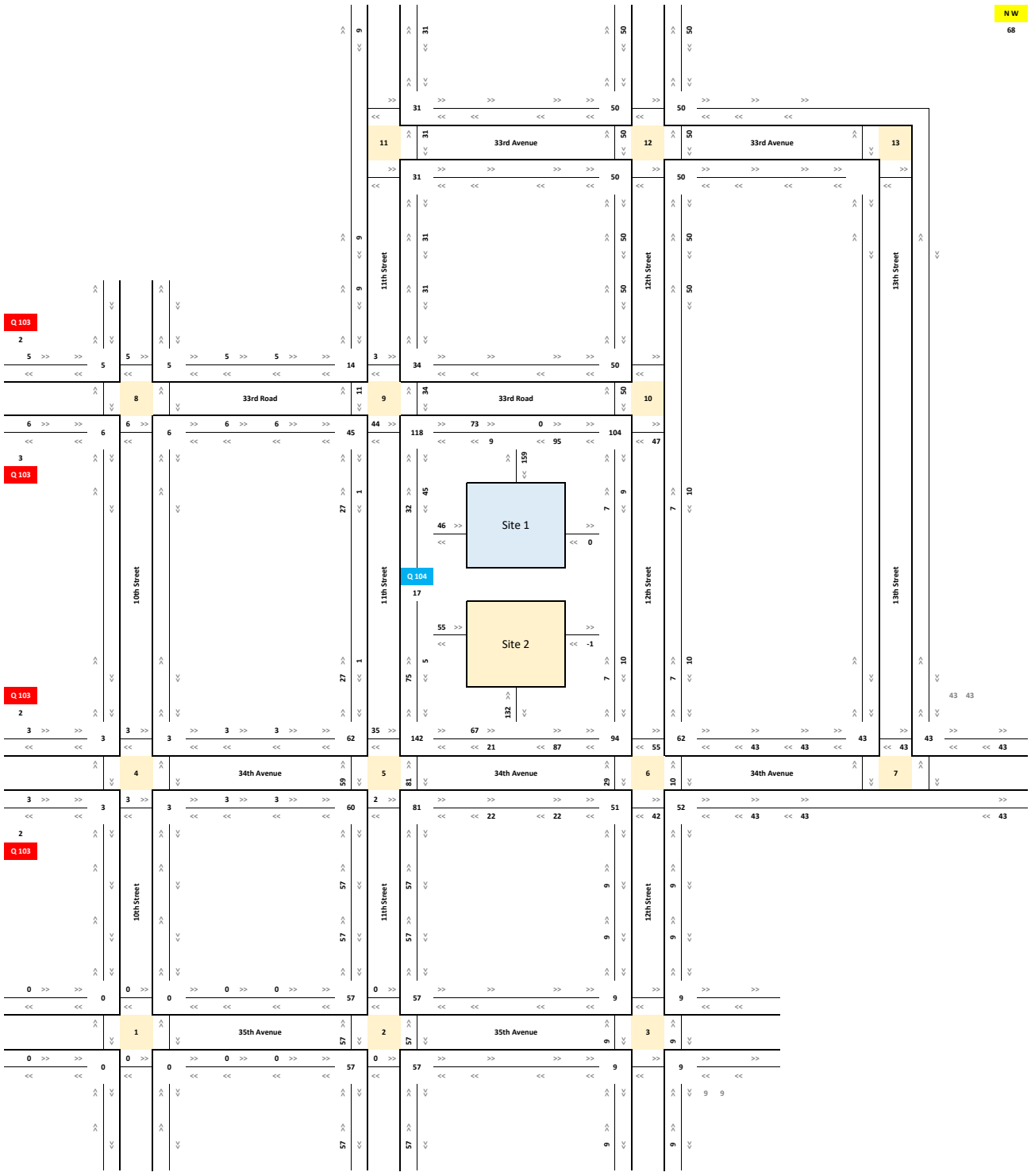

Legend

Intersection Number

>> Travel Direction

Movement Volume

Weekday PM - Total
Outbound

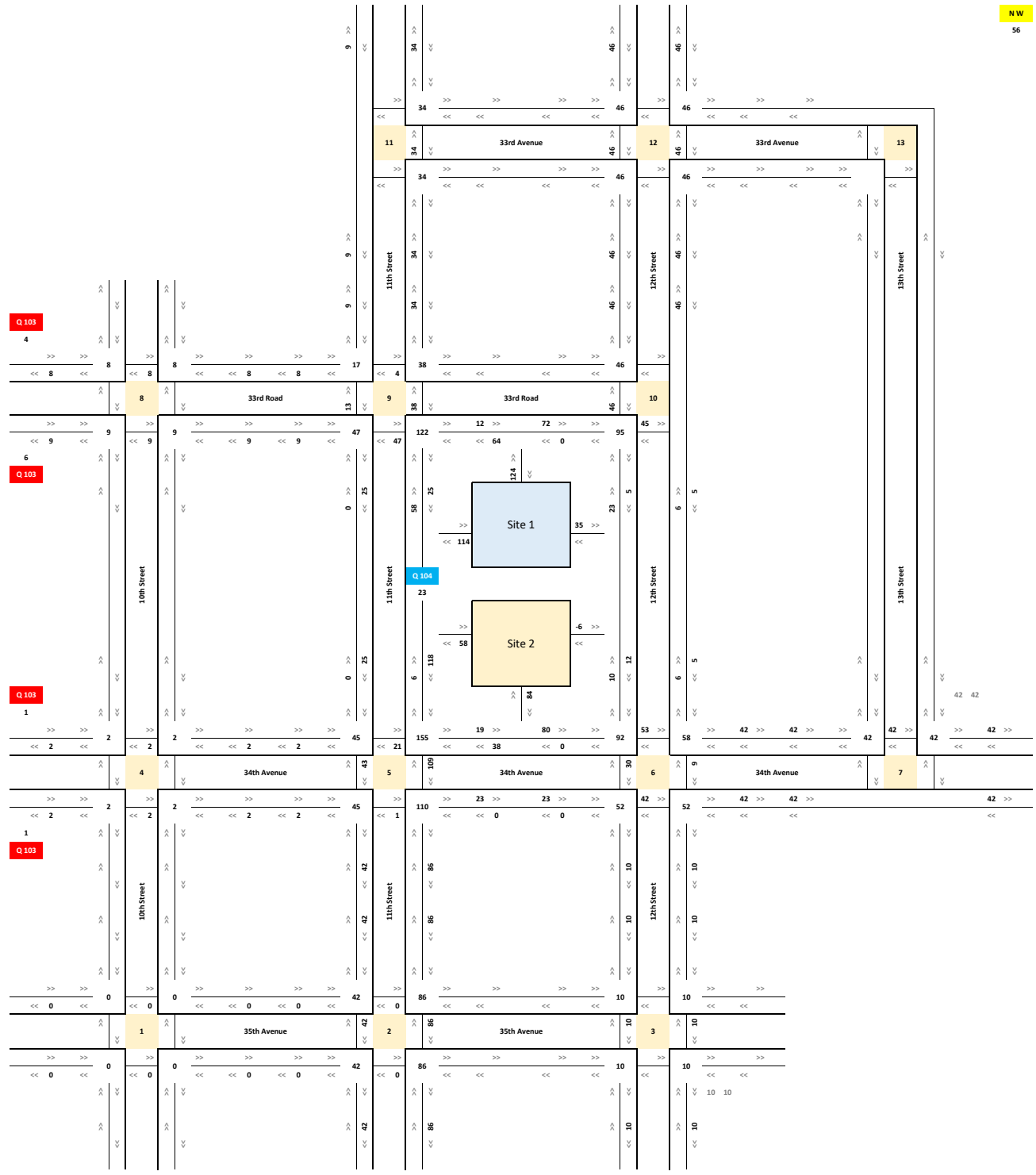

Legend

Intersection Number

>> Travel Direction

Movement Volume

Weekday PM - Total
Total

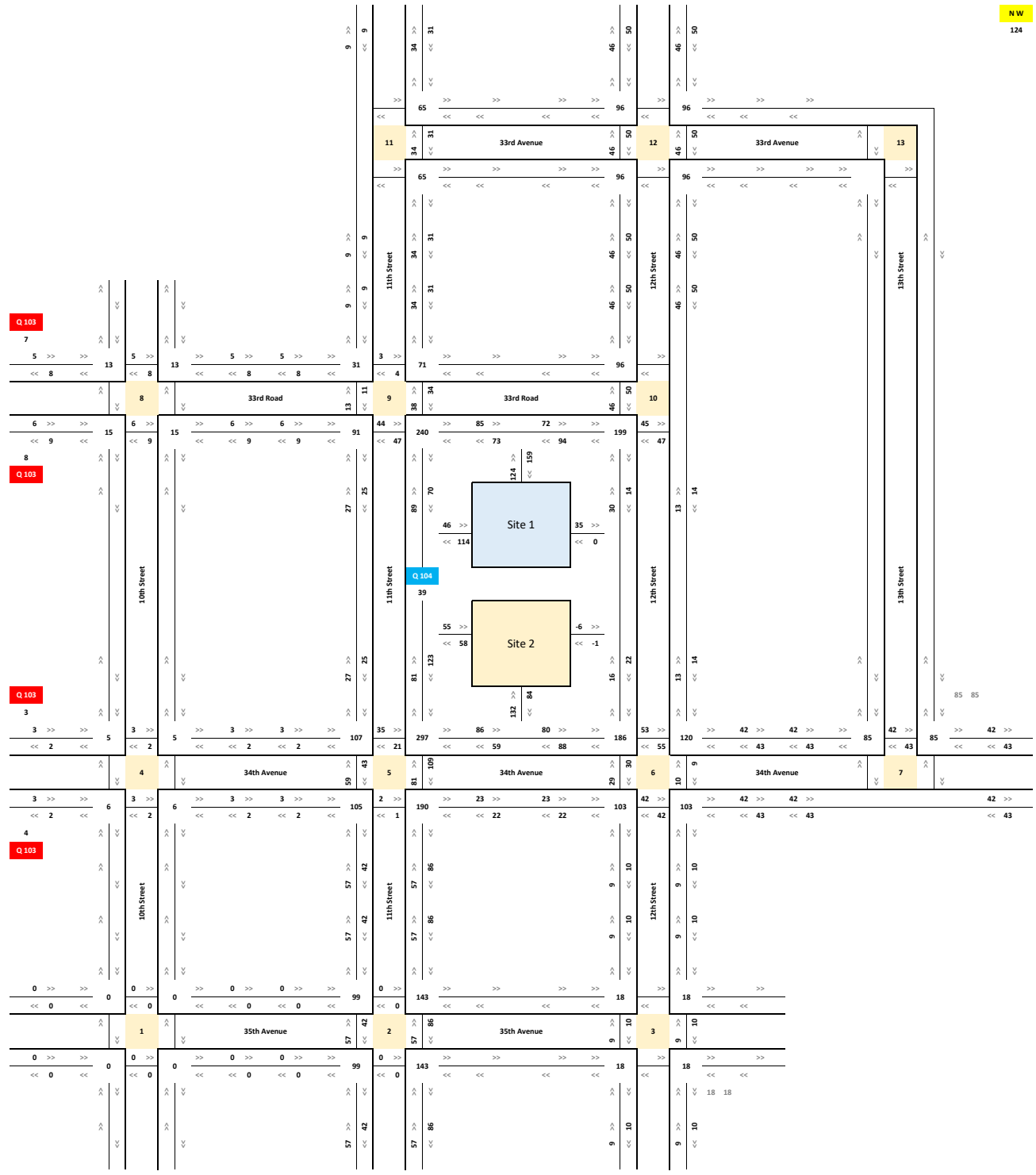

Legend

Intersection Number

>> Travel Direction

Movement Volume

Saturday Midday - Site 1
Inbound

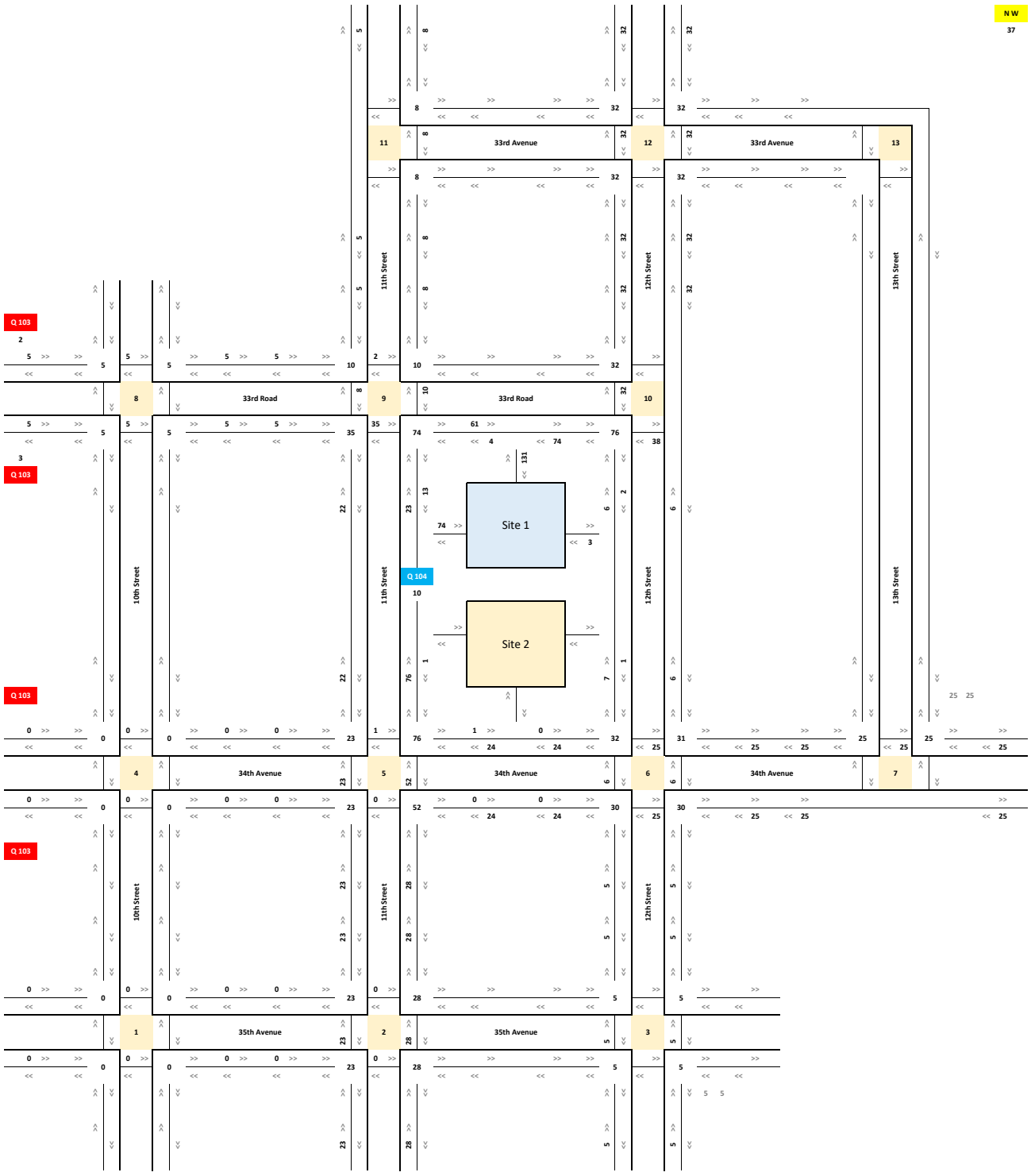

Legend

Intersection Number

>> Travel Direction

Movement Volume

Saturday Midday - Site 1
Outbound

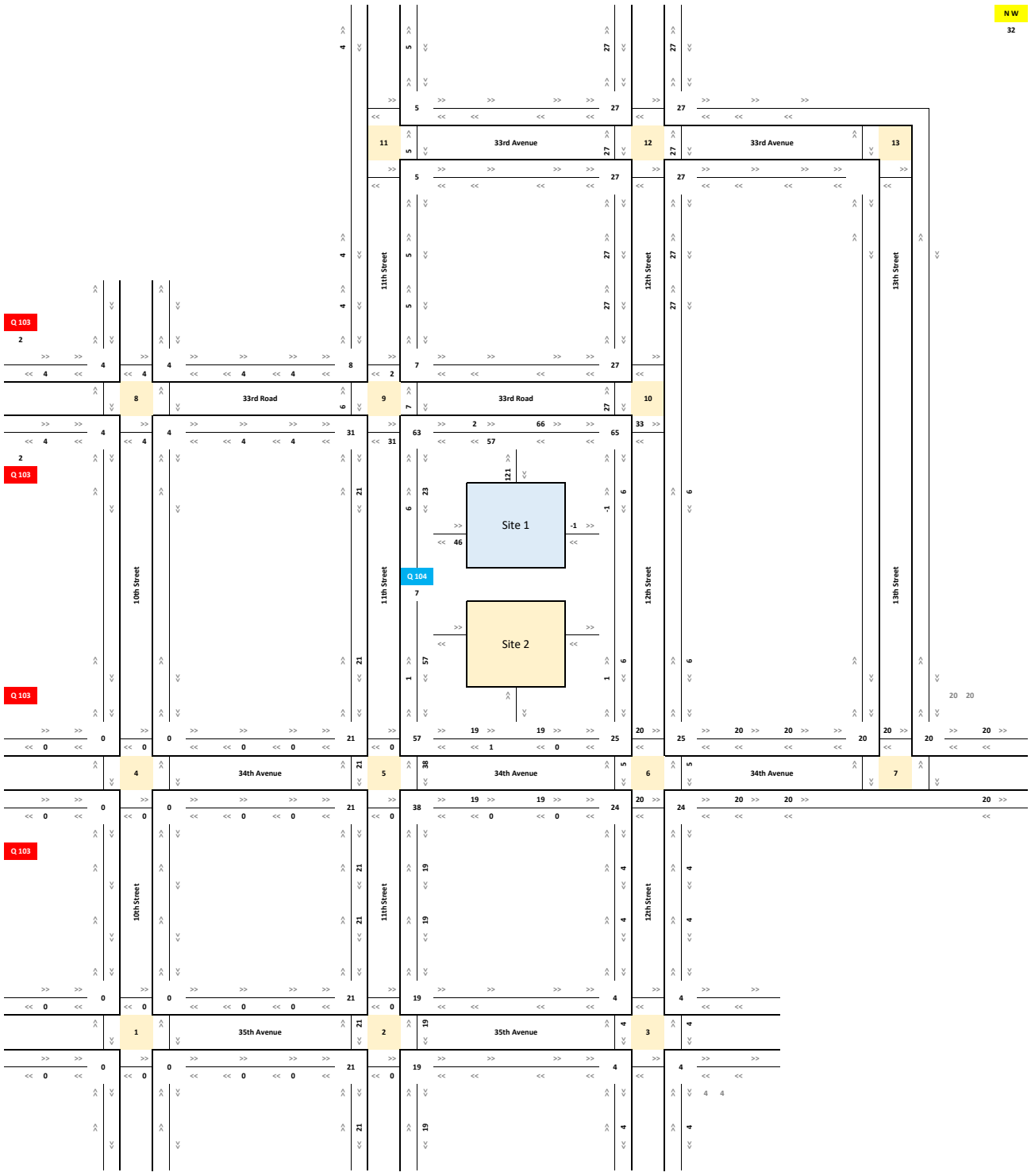

Legend

Intersection Number

>> Travel Direction

Movement Volume

Saturday Midday - Site 1
Total

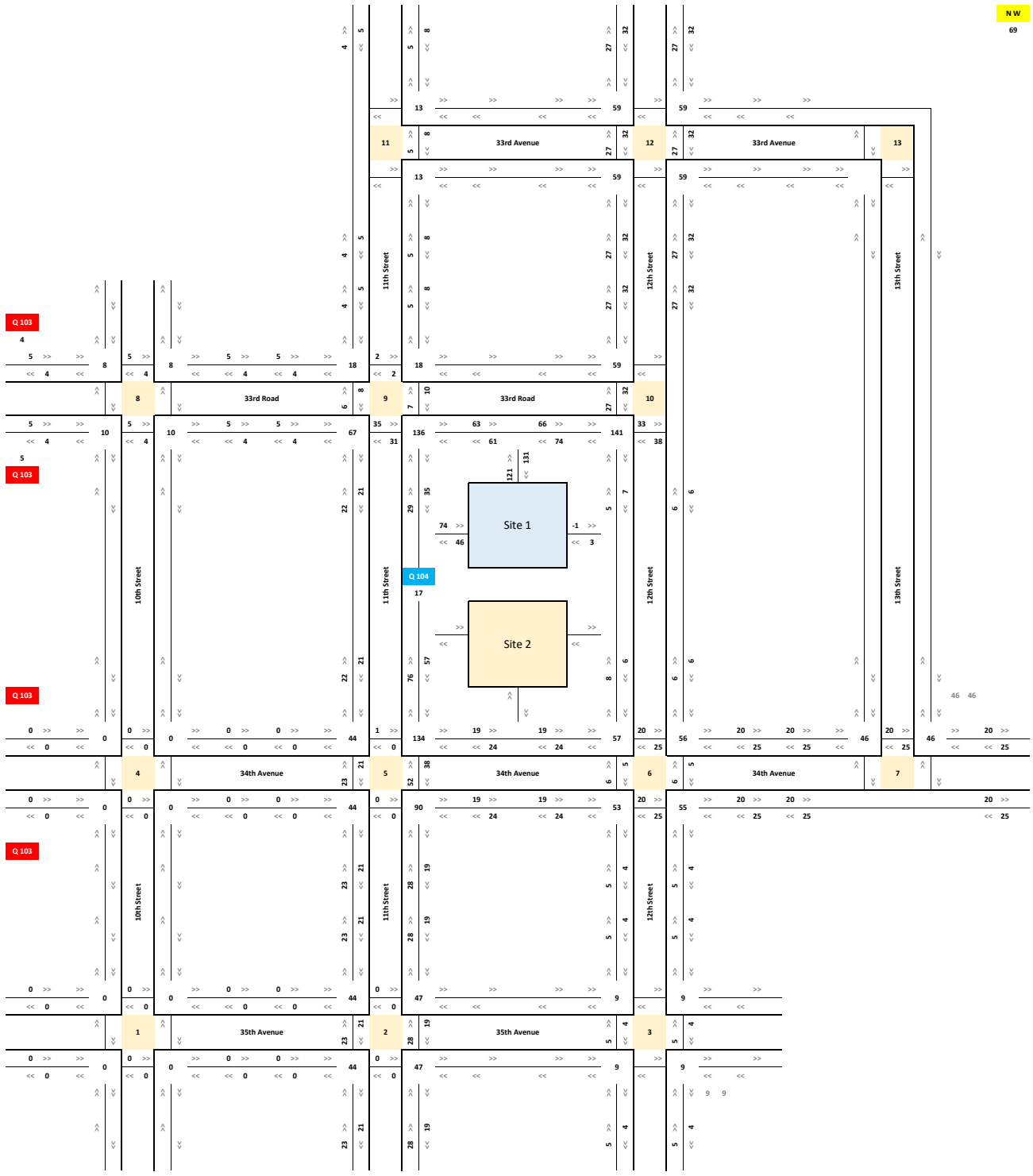

Legend

Intersection Number

>> Travel Direction

Movement Volume

Saturday Midday - Site 2
Inbound

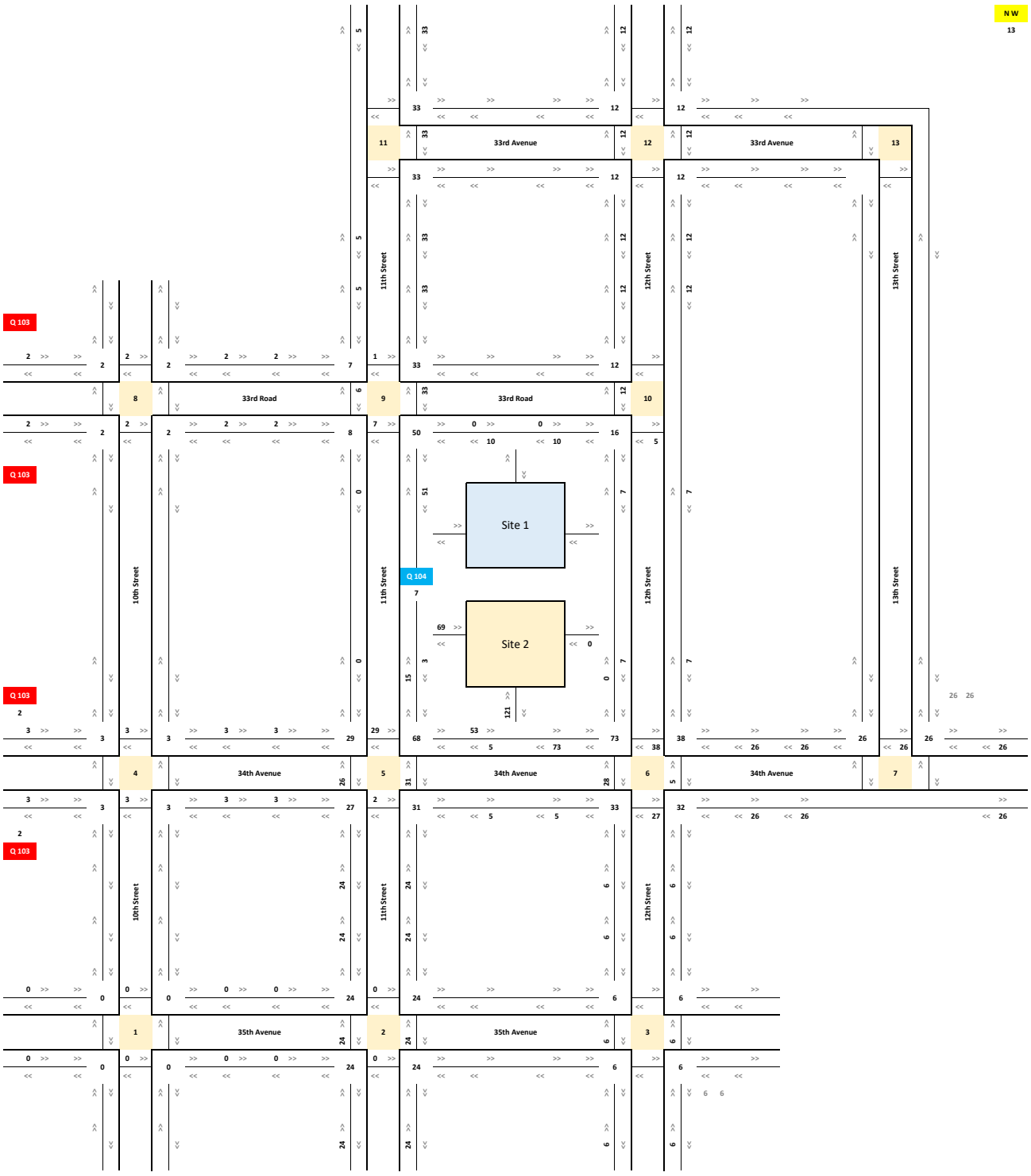

Legend

Intersection Number

>> Travel Direction

Movement Volume

Saturday Midday - Site 2
Outbound

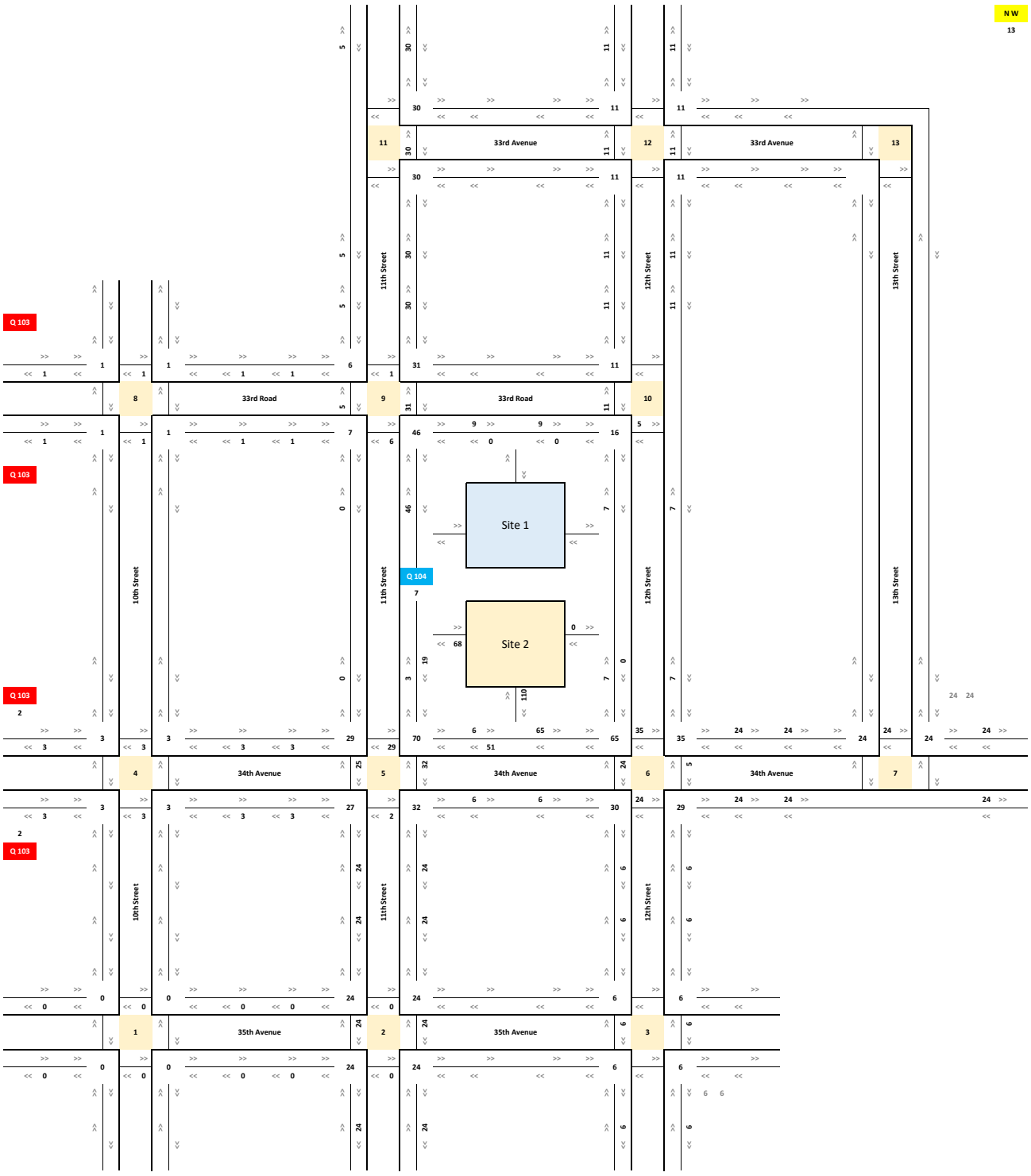

Legend

Intersection Number

>> Travel Direction

Movement Volume

Saturday Midday - Site 2
Total

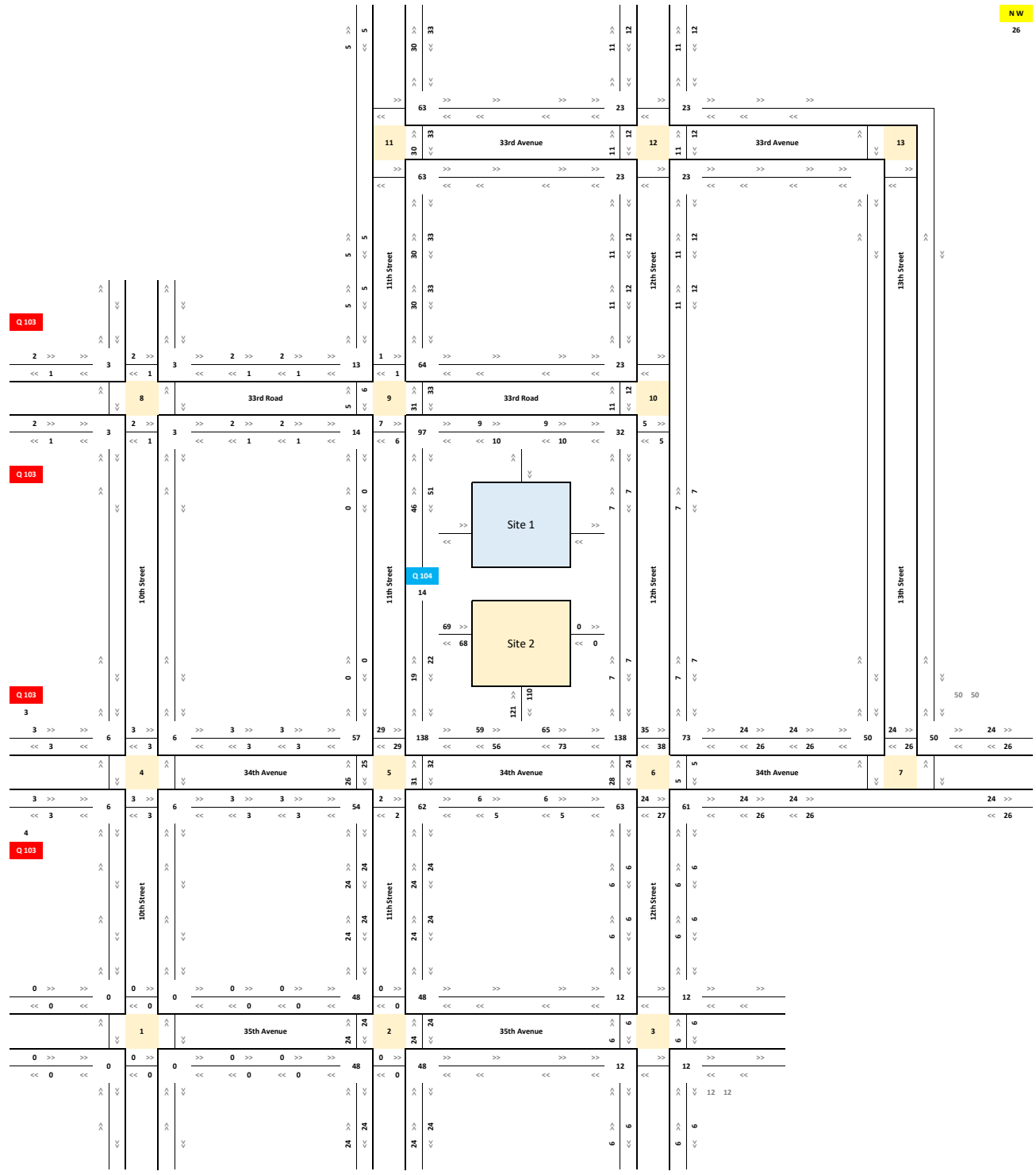

Legend

Intersection Number

>> Travel Direction

Movement Volume

Saturday Midday - Total
Inbound

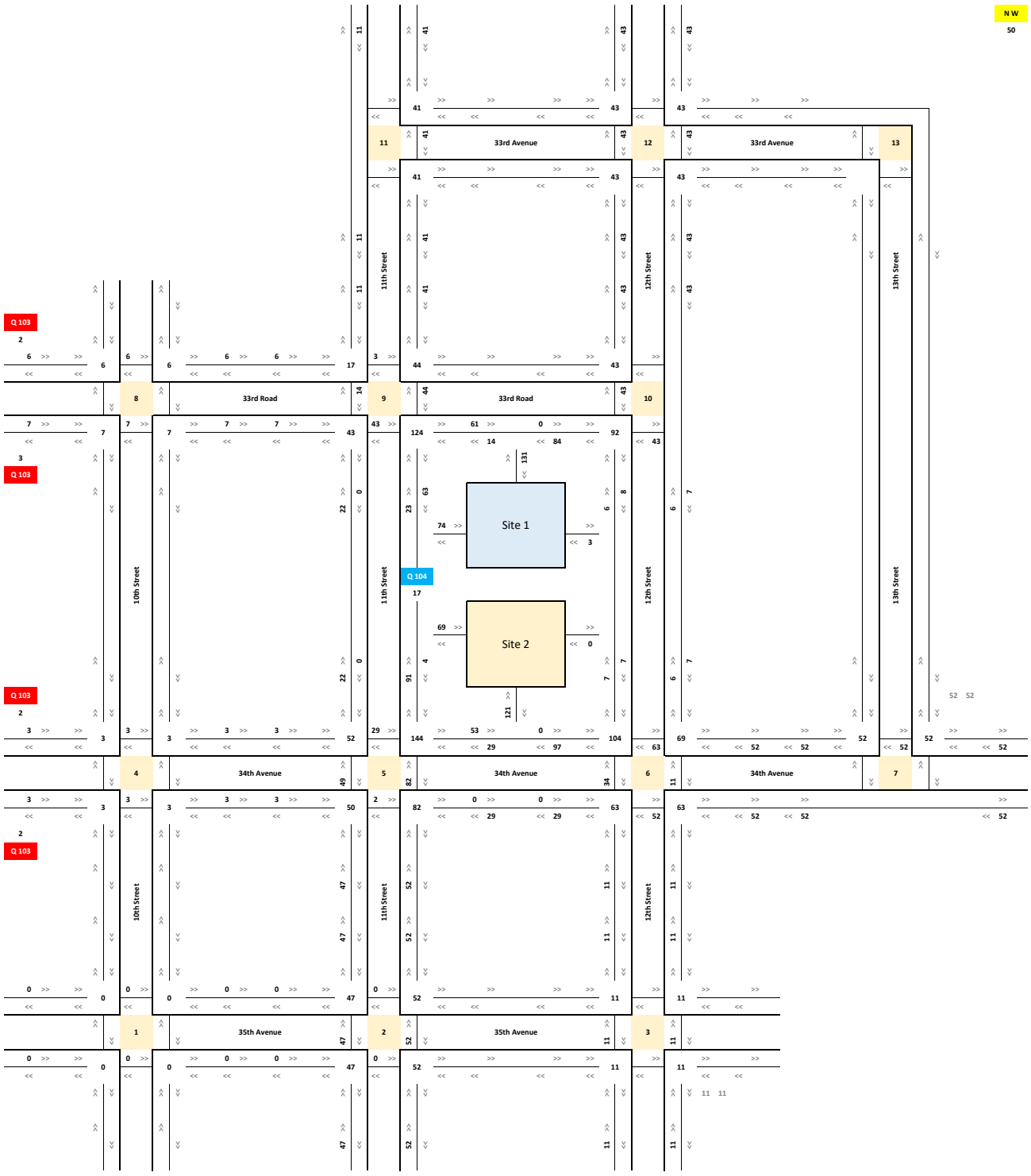

Legend

Intersection Number

>> Travel Direction

Movement Volume

Saturday Midday - Total
Outbound

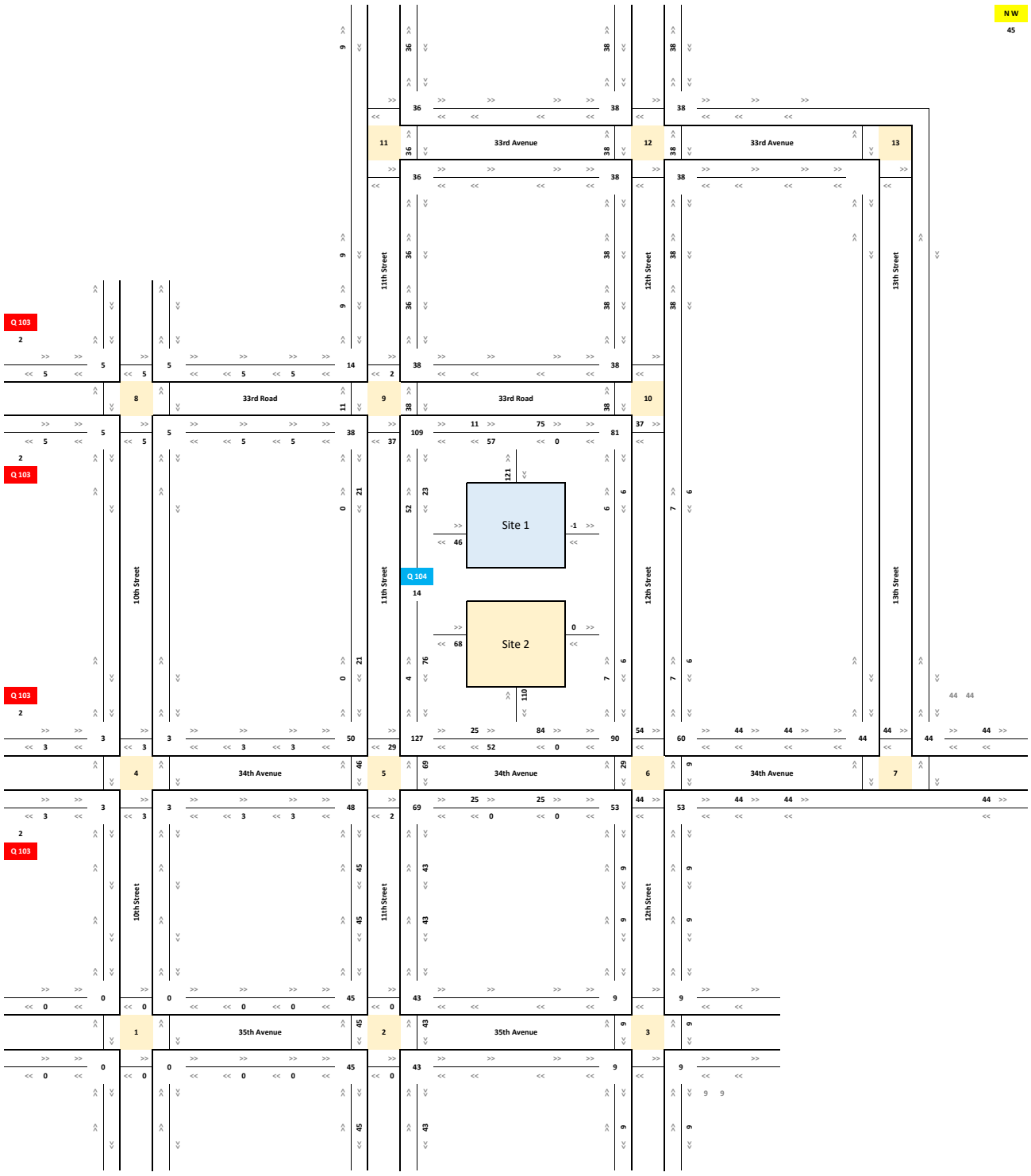

Legend

Intersection Number

>> Travel Direction

Movement Volume

Saturday Midday - Total
Total

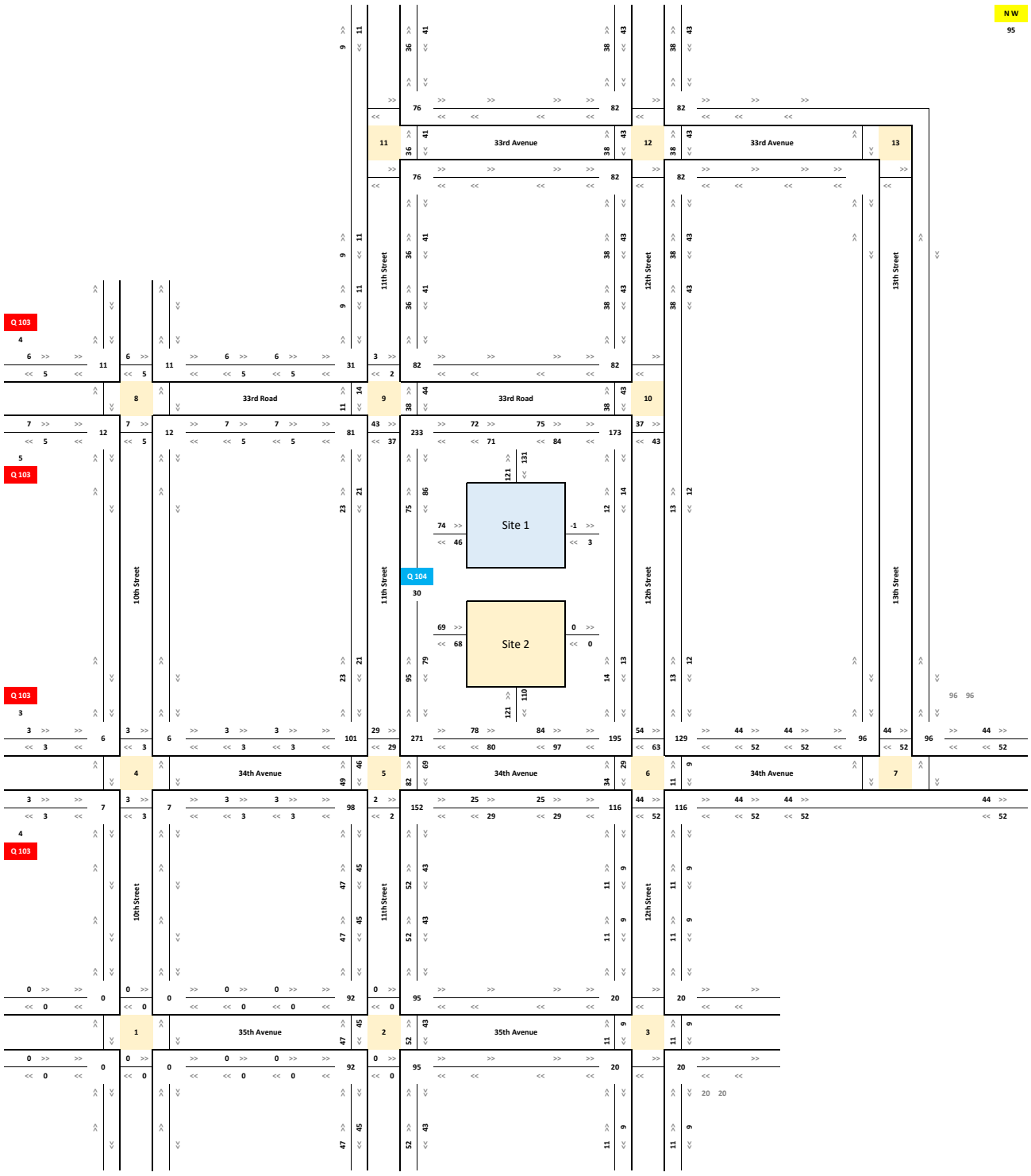

Legend

Intersection Number

>> Travel Direction

Movement Volume

INTERSECTION CONTROL UNIT



MULTI-WAY STOP CONTROL WARRANT ANALYSIS

34th Avenue and 12th Street

LOCATION

Queens

BOROUGH

New York City
Department of Transportation

NEW YORK CITY DOT

Department of Transportation - Traffic Operations -

Multi-Way Stop Control Survey Sheet

4/1/2014

Borough: Queens **Log #:** _____ **Ref. #:** _____

Location: 12th Street and 34th Avenue **CB #:** _____

Requestor: _____ **Inspector:** _____

Date Completed: _____

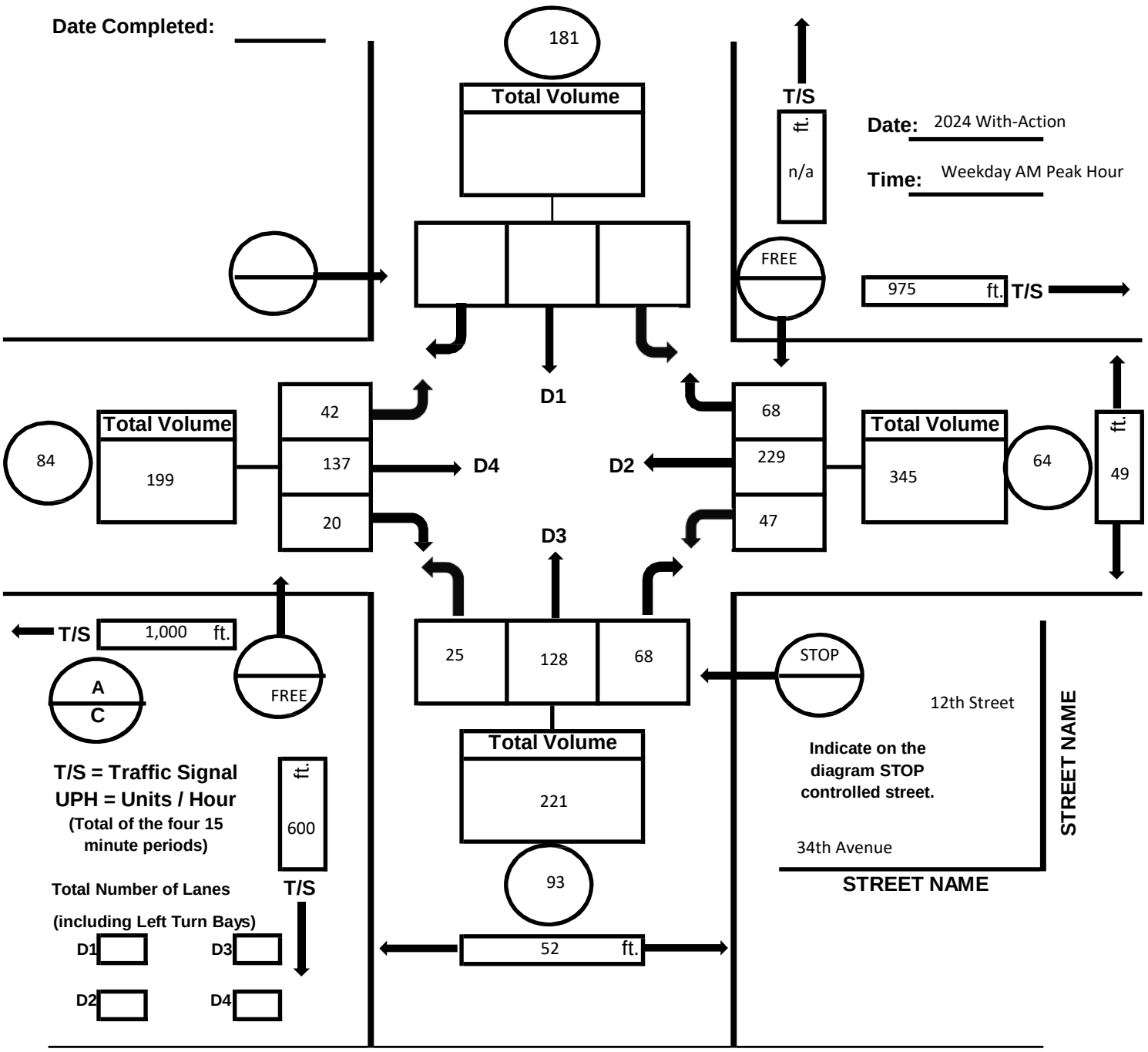

Inspector: _____ **Date:** _____ **Satisfied** ☐

Approved ☐ _____ **Date:** _____ **Warrant #** ☐

Denied ☐ _____ **Date:** _____ **Not Satisfied** ☐

NEW YORK CITY DOT

Department of Transportation - Traffic Operations -

Multi-Way Stop Control Survey Sheet

4/1/2014

Borough: Queens **Log #:** _____ **Ref. #:** _____

Location: 12th Street and 34th Avenue **CB #:** _____

Requestor: _____ **Inspector:** _____

Date Completed: _____

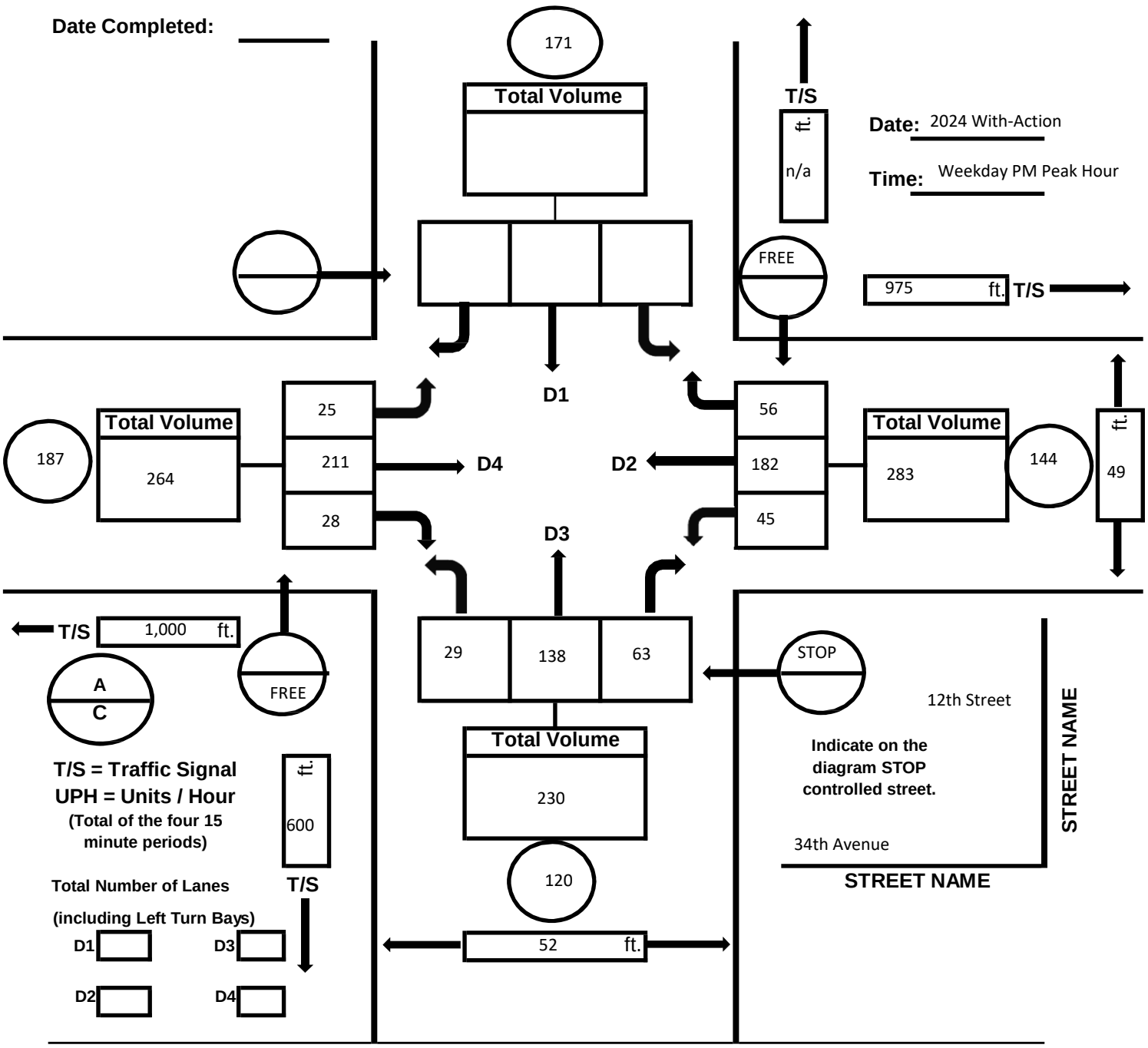

Inspector: _____ **Date:** _____ **Satisfied** ☐

Approved ☐ _____ **Date:** _____ **Warrant #** ☐

Denied ☐ _____ **Date:** _____ **Not Satisfied** ☐

NEW YORK CITY DOT

Department of Transportation - Traffic Operations -

Multi-Way Stop Control Survey Sheet

4/1/2014

Borough: Queens **Log #:** _____ **Ref. #:** _____

Location: 12th Street and 34th Avenue **CB #:** _____

Requestor: _____ **Inspector:** _____

Date Completed: _____

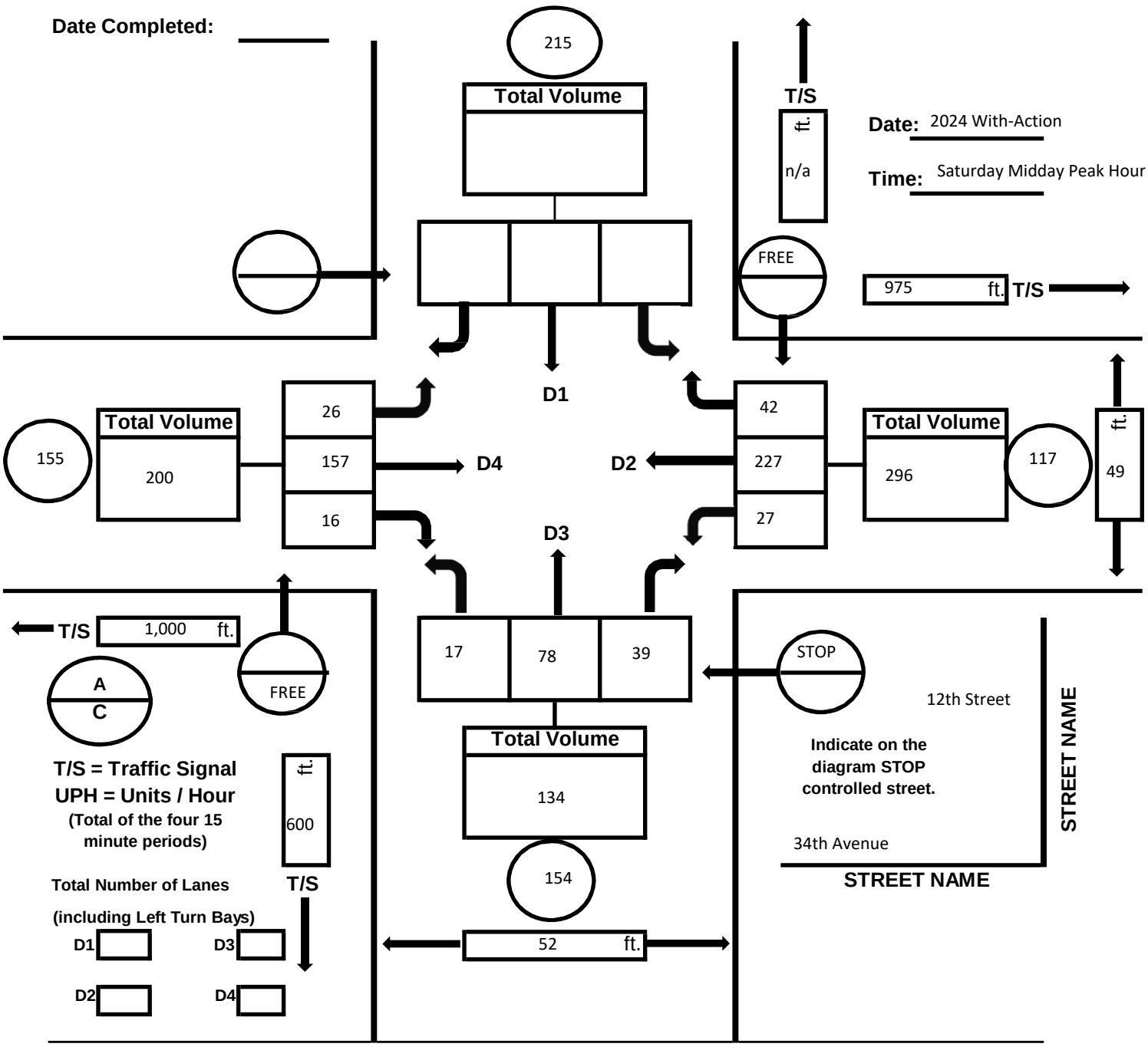

Inspector: _____ **Date:** _____ **Satisfied** ☐

Approved ☐ _____ **Date:** _____ **Warrant #** ☐

Denied ☐ _____ **Date:** _____ **Not Satisfied** ☐

Multi-Way Stop Control Warrant Sheet

Street	Name	Manual Count	Date	Time	Average 8 Highest Hours Both Approaches – ATR's	Date
Major	34th Avenue	283 veh + 264 veh = 547 VPH	2024 Build Year	4:15-5:15pm	569	11/23/2021
Minor	12th Street	230 veh + 187 ped + 144 ped = 561 Units/Hour (UPH)	2024 Build Year	4:15-5:15pm	275	11/23/2021

Pedestrians Crossing Major Street (Both Legs) 171 + 120 = 291

Multi-Way Stop Controls should not be installed unless one or more of the following warrants are met.

WARRANT 1 (Volume Warrant)

Satisfied [X]

Not Satisfied [ ]

This Warrant is used only where the volume of traffic on the intersecting roads is approximately equal. The vehicular volume entering the intersection from the major street approaches (total of both approaches) averages at least 300 vehicles per hour for any 8 hours of an average day and the combined vehicular, pedestrian and bicycle volume entering the intersection from the minor street approaches (total of both approaches) averages at least 200 units per hour for the same 8 hours, with an average delay to minor street vehicular traffic of at least 30 seconds/vehicle during the highest hour.

A.

Major Street Volumes (Both Approaches)		Minor Street Combined Volumes (Both Approaches)		**500 UNITS / HOUR**
569	+	230 veh + 187 ped + 144 ped = 561	> =	1,130

- Major and Minor Street Volumes are the averages for any 8 hours.
- Automatic Traffic Recorder (ATR) count sheets must be attached.

.

WARRANT 2 (Volume / Speed Warrant)

Satisfied	
Not Satisfied	X

This Warrant is used when the 85th percentile speed on the major street exceeds 40 mph, then the volumes from Warrant 1 are reduced to 70 percent of the requirements. You still must have an average delay of at least 30 seconds / vehicle during the highest hour for the minor street vehicular traffic.

A.

Major Street Volumes (Both Approaches)		Minor Street Combined Volumes (Both Approaches)		**350 UNITS / HOUR**
	+		> =	

- Major and Minor Street Volumes are the averages for any 8 hours.
- Automatic Traffic Recorder (ATR) count sheets must be attached.

WARRANT 3 (Crash Experience Warrant)

Satisfied	
Not Satisfied	X

This Warrant is satisfied when a minimum of 5 preventable crashes exist in a 12 month period. If you do not have crashes for the latest 12 month period, then you must obtain crash information for the previous 12 month period. Preventable crashes are the type of reported crashes that could have been susceptible to correction by a multi-way stop installation. Such crashes include right-turn and left-turn collisions as well as right-angle collisions or pedestrian-vehicular crashes.

Year	Total Crashes	Preventable Crashes
2019	2	2
2018	2	2
2017	0	0
2016	2	2

Crash Sheets must be attached.

WARRANT 4 (Crash Experience / Volume Warrant)

Satisfied	
Not Satisfied	X

This Warrant is used where warrants 1 and 3 are satisfied to 80 percent of the minimum values. Warrant 2 is excluded from this condition.

A.

Major Street Volumes (Both Approaches)		Minor Street Combined Volumes (Both Approaches)		**400 UNITS / HOUR**
561	+	230 veh + 187 ped + 144 ped = 561	> =	1,122

B.

Year	Total Crashes	Preventable Crashes
2019	2	2

- Major and Minor Street Volumes are the averages for any 8 hours.
- Automatic Traffic Recorder (ATR) count sheets must be attached.
- Crash Sheets must be attached.

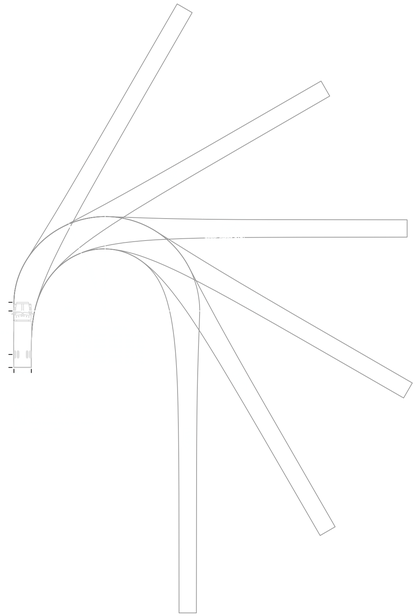

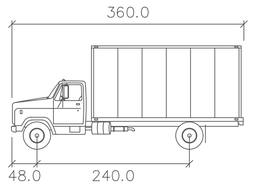

SU–30

	inches
Width	: 96.0
Track	: 96.0
Lock to Lock Time	: 6.0
Steering Angle	: 31.8

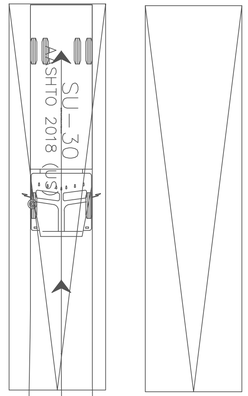



O.H. DOOR O.H. DOOR

12th STREET.

50' WIDE



General Notes

Assumptions

- Travel Speed = 1mp
- Wheels turned from Stop

Project Name and Address

11–34 11th Street Rezoning

SU–30 Truck Swept Path

12th Street Site 2

1 of 2

Author Name and Address

Equity Environmental Engineering
500 International Blvd, Suite
150, Mount Olive, NJ 07828

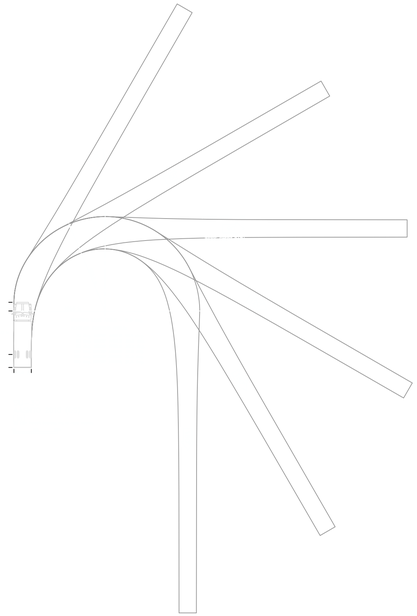

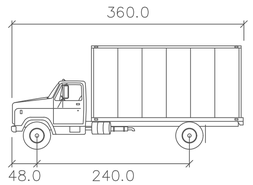

SU–30

	inches
Width	: 96.0
Track	: 96.0
Lock to Lock Time	: 6.0
Steering Angle	: 31.8

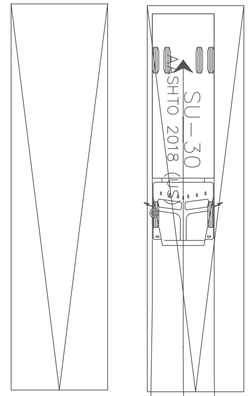

O.H. DOOR

O.H. DOOR

12th STREET

50' WIDE





N

General Notes

Assumptions

- Travel Speed = 1mp
- Wheels turned from Stop

Project Name and Address

11–34 11th Street Rezoning

SU–30 Truck Swept Path

12th Street Site 2

2 of 2

Author Name and Address

Equity Environmental Engineering
500 International Blvd, Suite
150, Mount Olive, NJ 07828

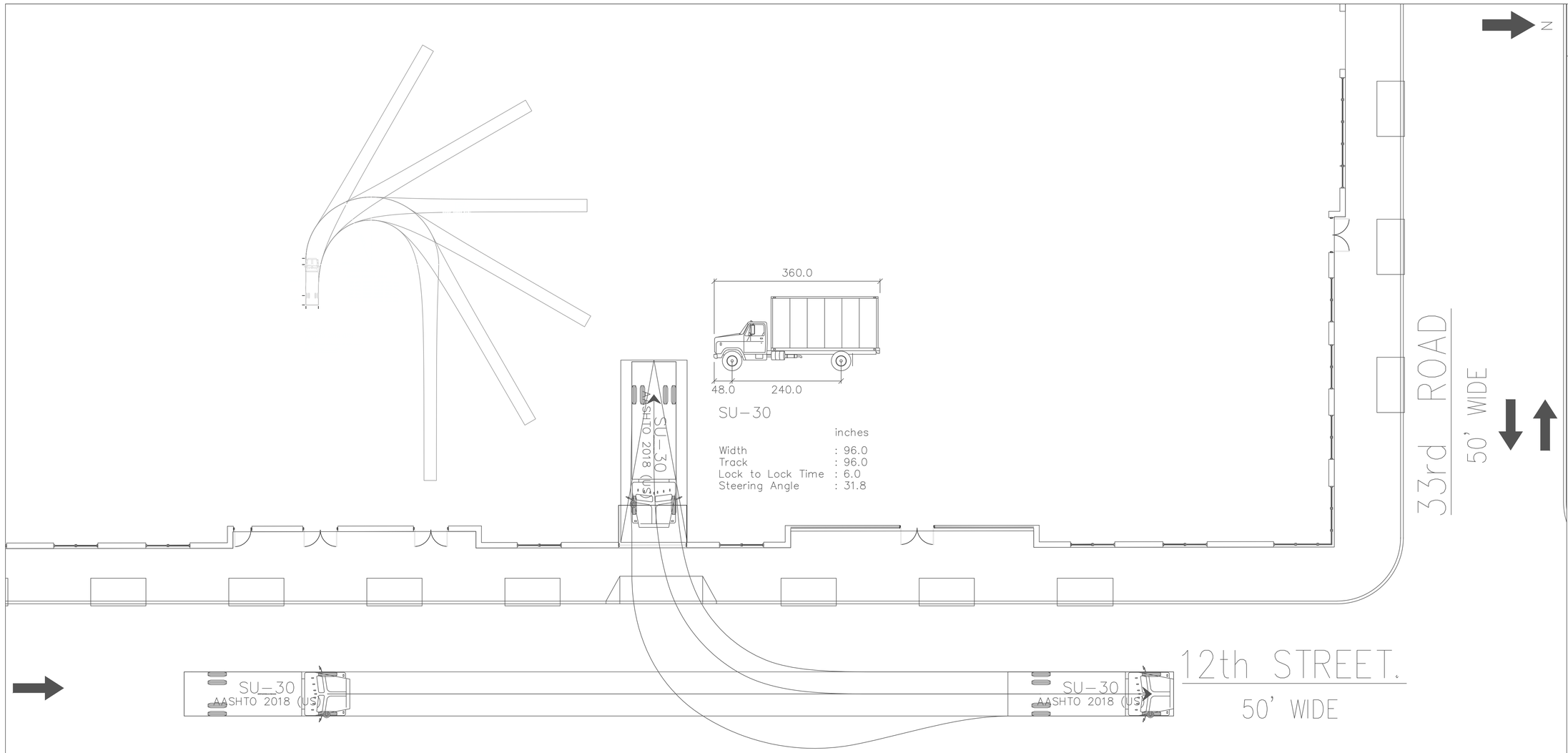

General Notes

Assumptions

- Travel Speed = 1mp
- Wheels turned from Stop

Project Name and Address

11–34 11th Street Rezoning

SU–30 Truck Swept Path

12th Street Site 1

1 of 1

Author Name and Address

Equity Environmental Engineering
500 International Blvd, Suite
150, Mount Olive, NJ 07828

N

SU–30
AASHTO 2018 (US)

SU–30
AASHTO 2018 (US)

11th STREET.

80' WIDE

O.H. DOOR

O.H. DOOR

SU–30
AASHTO 2018 (US)

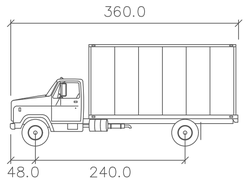

SU–30

	inches
Width	: 96.0
Track	: 96.0
Lock to Lock Time	: 6.0
Steering Angle	: 31.8

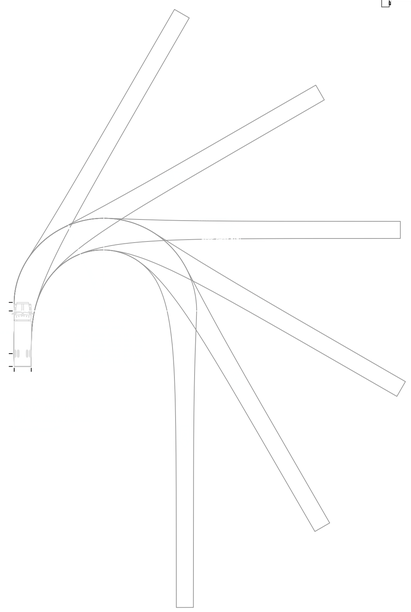

General Notes

Assumptions

- Travel Speed = 1mp
- Wheels turned from Stop

Project Name and Address

11–34 11th Street Rezoning

SU–30 Truck Swept Path

11th Street Site 1

1 of 2

Author Name and Address

Equity Environmental Engineering
500 International Blvd, Suite
150, Mount Olive, NJ 07828

N

11th STREET.

80' WIDE

SU-30
AASHTO 2018 (US)

SU-30
AASHTO 2018 (US)

O.H. DOOR

O.H. DOOR

SU-30
AASHTO 2018 (US)

360.0

48.0 240.0

SU-30

	inches
Width	: 96.0
Track	: 96.0
Lock to Lock Time	: 6.0
Steering Angle	: 31.8

General Notes

Assumptions

- Travel Speed = 1mp
- Wheels turned from Stop

Project Name and Address

11-34 11th Street Rezoning

SU-30 Truck Swept Path

11th Street Site 1

2 of 2

Author Name and Address

Equity Environmental Engineering
500 International Blvd, Suite
150, Mount Olive, NJ 07828

N

11th STREET.

80' WIDE

SU-30
AASHTO 2018 (US)

SU-30
AASHTO 2018 (US)

O.H. DOOR

O.H. DOOR

SU-30
AASHTO 2018 (US)

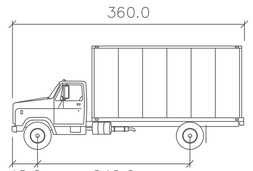

SU-30

	inches
Width	: 96.0
Track	: 96.0
Lock to Lock Time	: 6.0
Steering Angle	: 31.8

General Notes

Assumptions

- Travel Speed = 1mp
- Wheels turned from Stop

Project Name and Address

11-34 11th Street Rezoning

SU-30 Truck Swept Path

11th Street Site 2

1 of 2

Author Name and Address

Equity Environmental Engineering
500 International Blvd, Suite
150, Mount Olive, NJ 07828

N

11th STREET.

80' WIDE

SU-30
AASHTO 2018 (US)

SU-30
AASHTO 2018 (US)

O.H. DOOR

O.H. DOOR

SU-30
AASHTO 2018 (US)

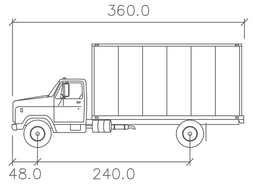

SU-30

	inches
Width	: 96.0
Track	: 96.0
Lock to Lock Time	: 6.0
Steering Angle	: 31.8

General Notes

Assumptions

- Travel Speed = 1mp
- Wheels turned from Stop

Project Name and Address

11-34 11th Street Rezoning

SU-30 Truck Swept Path

11th Street Site 2

2 of 2

Author Name and Address

Equity Environmental Engineering
500 International Blvd, Suite
150, Mount Olive, NJ 07828

N

11th STREET.

80' WIDE

WB-40
AASHTO 2018 (US)

WB-40
AASHTO 2018 (US)

O.H. DOOR

O.H. DOOR

WB-40
AASHTO 2018 (US)

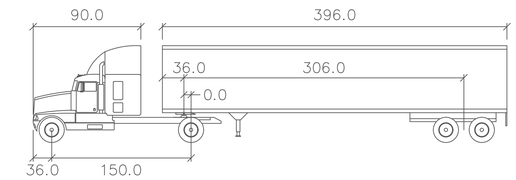

WB-40

inches

Tractor Width	: 96.0	Lock to Lock Time	: 6.0
Trailer Width	: 96.0	Steering Angle	: 20.3
Tractor Track	: 96.0	Articulating Angle	: 70.0
Trailer Track	: 96.0		

General Notes

Assumptions

- Travel Speed = 1mp
- Wheels turned from Stop

Project Name and Address

11-34 11th Street Rezoning

WB-40 Truck Swept Path

11th Street Site 2

1 of 1

Author Name and Address

Equity Environmental Engineering
500 International Blvd, Suite
150, Mount Olive, NJ 07828

APPENDIX F

CONSTRUCTION

CPEngineering, P.C.
Professional Engineering Services

1732 First Avenue, #26135, New York, NY, 10128
917-952-8216, Craig@CPEngineeringpc.com

August 10, 2021
Last Revised October 5, 2021

Re: Development of Construction Schedule
33-33 11th Street, 11-11 34th Avenue, Long Island City
ULURP: 210234ZMQ, N210235ZRQ

To Whom it May Concern:

At the request of the New York City Department of City Planning, CPEngineering, P.C. (CPE) was requested to provide a detailed construction analysis for the project located at 33-33 11th Street and 11-11 34th Avenue, Long Island City, NY. This also includes outparcels not included in our development proposal.

In terms of background, CPE retained an experienced construction management firm, The J Companies (www.theJcompanies.com). The leadership of The J Companies is David and Allan Brot, two experienced construction managers with over 25 years of experience in the New York City market.

The J Companies performed a detailed review of the architectural plans and in coordination with our design team developed the construction schedule provided for your review.

Provided below is further discussion and assumptions used in the development of the schedule.

Assumptions

We (The J Companies) have reviewed the proposed project composed of two Projected Development Sites and one Potential Development Site per the Environmental Assessment Statement draft to establish a project construction schedule and approach. These development sites are described below;

Projected Development Site 1 (Block 318, Lots 15 and 22)
A new 8-story, 95-foot-tall 338,474 GSF mixed-use commercial and residential building would be developed on Projected Development Site 1. On floors 1 and 2, there would be 90,251 GSF of commercial shell, proposed to be fit out for 11,955 GSF of local retail stores, a 6,552 GSF for an artist's studio, and a 71,744 GSF for two trade schools with accessory offices. The building would contain 204,831 GSF of residential space on floors 3 through 9, totaling up to 229 dwelling units including 46 reserved as permanently affordable. A 100 car, 43,392 GSF cellar level parking garage would be provided.

Projected Development Site 2 (Block 318, Lot 1)
An 8-story, 95-foot-tall, 248,095 gsf mixed-use building with commercial, community facility,

CPEngineering, P.C.
Professional Engineering Services
1732 First Avenue, #26135, New York, NY, 10128
917-952-8216, Craig@CPEngineeringpc.com

industrial/manufacturing, and residential uses would be developed on Projected Site 2. The ground floor would contain 12,086 GSF of local retail store uses and 27,109 GSF of food distribution warehouse uses; the second floor would contain 10,000 GSF of community facility and 23,902 GSF of general office uses, and floors three through nine would contain 149,677 GSF of residential uses. 60 residential accessory parking spaces would be provided at the cellar level.

Summary of Schedule

Demolition and clearance of site is assumed to start at approximately May 2022 and conclude September 2022.

Major Construction Activities post demolition are expected to commence with Excavation and SOE on or around October 2022 and conclude with interior core and shell work to be completed in July of 2024 for a period of 24 months of major construction activity. Interior finishes are assumed to complete in May of 2024. Total construction term activities are therefore assumed to last no more than 24 months.

There are a number of considerations that were included in developing a schedule for this project:

1. As the Land Use Application is co-sponsored by the owners of Projected Development Site 1 & 2, a shared mobilization is assumed, however with separate DOB filings. The projects will proceed as two separate but simultaneous developments, which makes their individual development term roughly similar in terms of time frame to similar adjacent rezonings and projects in size that have construction durations under 24-months such as the proximate Vernon Boulevard-Broadway Rezoning Site and the Broadway and 11th Street Rezoning Site. The coordination between these two development sites will allow for simultaneous demolition and excavation while allowing for construction of each individual building to proceed independently once general excavation is complete.

2. Review of geotechnical analysis in the area indicates that dewatering is unnecessary and that no special measures are required for SOE or foundation work.

3. The fact that the entire block is to be redeveloped and is accessible from all four sides, in an area with relatively low vehicular and pedestrian activity will greatly facilitate access and mobilization and construction term activities at site. The Site is immediately accessible from Vernon Blvd, Broadway and 34th Street which are Minor Arterials, while 12th Street between Broadway and 34th St is a major collector. Construction access and ability to control and mobilize the entire block frontage will greatly assist in the coordination of the development and provide more efficient staging and sequencing of material delivery and maintenance of traffic thereby positively affecting the overall construction schedule.

4. The overall size of the project sites allows significant flexibility for mobilization and staging the work and on-site storage of materials. Further, shared mobilization will enhance this flexibility between development sites. The width and length and overall size

1732 First Avenue, #26135, New York, NY, 10128
917-952-8216, Craig@CPEngineeringpc.com

and relative isolation of the block from adjacent buildings of allows for multiple teams to work on each floor with minimal interference which will assist in expediting construction processes.

5. Projected Site 1, the larger of the two sites, has a simple rectilinear floor plate and a single floor of excavation to accommodate a single floor standard layout underground parking facility. The parking cellar along with the first two floors of commercial office shell will require minimal finish work and will provide the base for standard U-shaped residential floors to be built.

6. Projected Site 2, provides an even more basic structure compared to Site 1, with one floor of standard cellar parking garage, with a simple warehouse structure with an open plan on the ground floor – located directly above the garage. The commercial shell for local retail also shares floor 1, while office and community facility shells are on the second floor. All of these uses from cellar level to third floor have minimal finish work and would be built to suit and would allow for expedited completion

- The proposed structural framing method is for a cast-in-place concrete system which results in time efficiencies over precast concrete and structural steel systems as minimal off-site fabrication and dependence on availability of materials is minimized.

- Minimal underpinning is necessary as the entire block is subject to redevelopment which will result in significant site development efficiency in such an infill urban environment

- Dewatering measures will not be required as groundwater is well below 40’ of the site grade.

- The construction of the façade is to be a panelized system and would minimize construction time.

The enclosed preliminary schedule outlines the sequence of work. The project as analyzed will take under 24 months to complete.

Schedule Outline:

- Demolition is schedule to last 80 days or 3.5 months

- Support of excavation and foundation work is scheduled for 150 days or 5 months

- Superstructure will start approximately 1 month prior to completion of all excavation and foundation work and last approximately 7 months

- Façade Enclosure work will run approximately 8 months and start approximately 2 months before completion of all superstructure work.

CPEngineering, P.C.
Professional Engineering Services

1732 First Avenue, #26135, New York, NY, 10128

917-952-8216, Craig@CPEngineeringpc.com

- Roughing and waterproofing would run approximately 60 days and start approximately 1 month before end of façade enclosure work

- Elevator will be installed upon completion of super structure with some overlap – commencing two months prior to completion of superstructure and take a total of 8 months.

- Interior core and shell would commence at end of superstructure work and be completed in under 6 months.

- Finishes will take place over three months and conclude approximately 2 months after interior core and shell are complete

- Inspection, Sign Offs, and TCO will take 2 months concurrent with the finishes and conclude approximately one month after interior finishes.

Sincerely,



Craig Puerta, PE

Engineer and Owners Representativ



ID	Task Name	Duration	Start	Finish
1				
2	PRE-CONSTRUCTION			
3	DESIGN DEVELOPMENT	90 days	Wed 12/1/21	Tue 4/5/22
4	DOB APPROVALS AND PERMIT	60 days	Wed 2/23/22	Tue 5/17/22
5	NOTICE TO PROCEED	1 day	Sat 10/1/22	Sat 10/1/22
6	BID AND AWARD	75 days	Mon 10/3/22	Fri 1/13/23
7	SUBMITTALS AND APPROVALS	90 days	Mon 10/17/22	Fri 2/17/23
8	COORDINATION AND FABRICATION	6 mons	Mon 11/28/22	Fri 5/12/23
9	CONSTRUCTION			
10	Demolition and Site Clearing	80 days	Wed 5/18/22	Tue 9/6/22
11	Site Mobilization/Temp Facilities/ Logistics	10 days	Wed 6/1/22	Tue 6/14/22
12	Excavation and SOE	40 days	Wed 9/28/22	Tue 11/22/22
13	Foundation	110 days	Wed 11/23/22	Tue 4/25/23
14	Superstructure Concrete	7 mons	Fri 4/14/23	Thu 10/26/23
15	Façade Enclosure	8 mons	Fri 8/4/23	Thu 3/14/24
16	Roofing and Waterproofing	60 days	Fri 2/2/24	Thu 4/25/24
17	Elevator	8 mons	Fri 9/15/23	Thu 4/25/24
18	Interior Core and Shell	6 mons	Fri 11/27/23	Thu 5/18/24
19	Special Inspections	60 days	Fri 5/24/24	Thu 8/15/24
20	Interior Finishes	3 mons	Fri 6/14/24	Thu 9/5/24
21	COMPLETED INSPECTIONS AND TESTING	30 days	Fri 8/23/24	Thu 10/3/24
22	TCO/CO	15 days	Fri 10/4/24	Thu 10/24/24

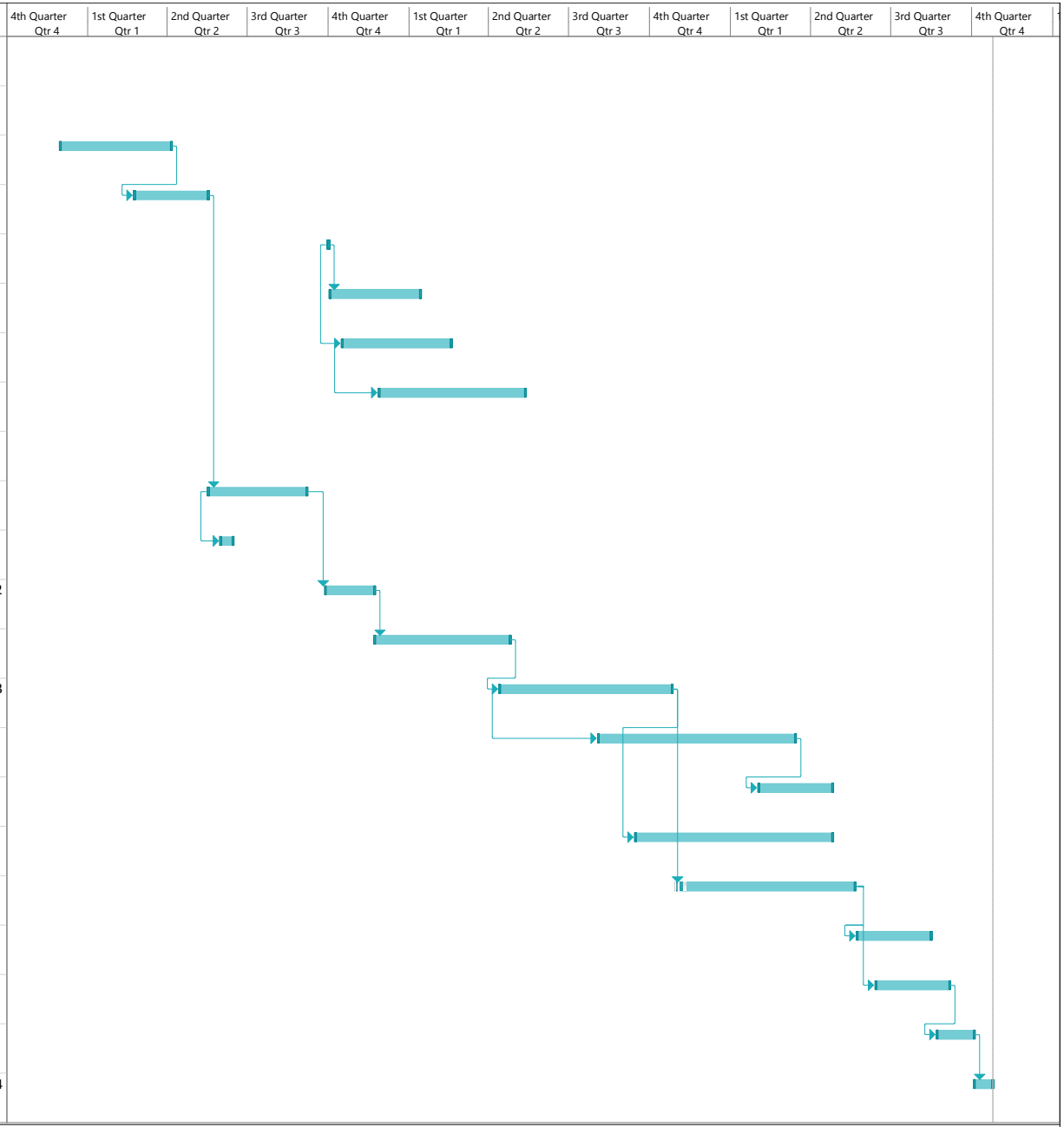

33-33 11th Street &
11-11 34th Ave LIC, NY
Date: Mon 8/9/21
Block 318, Lots 15, 22, 1

Task	Project Summary	Manual Task	Start-only	Deadline			
Split	Inactive Task	Duration-only	Finish-only	Progress			
Milestone	Inactive Milestone	Manual Summary Rollup	External Tasks	Manual Progress			
Summary	Inactive Summary	Manual Summary	External Milestone				

Location 1 (33 Rd and 11th St): Existing Noise PCE Value						
	Existing Vehicle Counts AM	Existing AM Peak Hour Noise PCE Value	Existing Vehicle Counts MD	Existing MD Peak Hour Noise PCE Value	Existing Vehicle Counts PM	Existing PM Peak Hour Noise PCE Value
Car/ Taxi	164	164	204	204	220	220
Van/Light Truck/SUV	0	0	0	0	0	0
Medium Truck	10	127	15	195	9	117
Heavy Truck	3	153	0	0	0	0
Bus	16	288	5	90	7	126
Total Noise PCE	-	732	-	489	-	463

Location 1 (33 Rd and 11th St): Existing VS. With-Action Construction Auto/Truck Noise PCE Screening						
	With Action AM Peak Hour Vehicles	With Action AM Peak Hour Noise PCE Value	With Action MD Peak Hour Vehicles	With Action MD Peak Hour Noise PCE Value	With Action PM Peak Hour Vehicles	With Action PM Peak Hour Noise PCE Value
Car/ Taxi	175	175	204	204	236	236
Van/Light Truck/SUV	0	0	0	0	0	0
Medium Truck	10	127	15	195	9	117
Heavy Truck	8	388	2	88	1	29
Bus	16	288	5	90	7	126
Total Noise PCE	-	978	-	577	-	509
Noise PCE Increment	AM	247	MD	88	PM	46
% Increase		**34%**		**18%**		**10%**

***Notes:**

Evaluates Existing Vehicle Counts at Noise Location 1 (33rd Road and 11th Street) and Incremental Project Generated Construction Worker Vehicles/Trucks at Traffic Study Intersection 9 (33rd Road and 11th Street)

All Project-Generated incremental trucks assumed Heavy

All numbers rounded to the nearest whole

Location 2 (11th St btwn 33rd Rd and 34th Ave): Existing Noise PCE Value						
	Existing Vehicle Counts AM	Existing AM Peak Hour Noise PCE Value	Existing Vehicle Counts MD	Existing MD Peak Hour Noise PCE Value	Existing Vehicle Counts PM	Existing PM Peak Hour Noise PCE Value
Car/ Taxi	148	148	182	182	188	188
Van/Light Truck/SUV	0	0	0	0	0	0
Medium Truck	22	284	14	182	12	156
Heavy Truck	3	147	0	0	0	0
Bus	19	342	5	90	7	126
Total Noise PCE	-	921	-	454	-	470

Location 2 (11th St btwn 33rd Rd and 34th Ave): Existing VS. With-Action Construction Auto/Truck Noise PCE Screening						
	With Action AM Peak Hour Vehicles	With Action AM Peak Hour Noise PCE Value	With Action MD Peak Hour Vehicles	With Action MD Peak Hour Noise PCE Value	With Action PM Peak Hour Vehicles	With Action PM Peak Hour Noise PCE Value
Car/ Taxi	181	181	182	182	224	224
Van/Light Truck/SUV	0	0	0	0	0	0
Medium Truck	22	284	14	182	12	156
Heavy Truck	16	742	5	223	2	74
Bus	19	342	5	90	7	126
Total Noise PCE	-	1549	-	677	-	581
Noise PCE Increment	AM	628	MD	223	PM	111
% Increase		**68%**		**49%**		**24%**

***Notes:**

Evaluates Existing Vehicle Counts at Noise Location 2 (11th Street between 33rd Road and 34th Avenue) and Incremental Project Generated Construction Worker Vehicles/Trucks at Site 2 (11th Street between 33rd Road and 34th Avenue)

All incremental project generated trucks assumed Heavy

All numbers rounded to the nearest whole

Location 3 (34 Ave and 11th St): Existing Noise PCE Value						
	Existing Vehicle Counts AM	Existing AM Peak Hour Noise PCE Value	Existing Vehicle Counts MD	Existing MD Peak Hour Noise PCE Value	Existing Vehicle Counts PM	Existing PM Peak Hour Noise PCE Value
Car/ Taxi	384	384	416	416	470	470
Van/Light Truck/SUV	0	0	0	0	0	0
Medium Truck	38	494	21	273	24	312
Heavy Truck	0	0	7	329	0	0
Bus	40	720	11	198	13	234
Total Noise PCE	-	1598	-	1216	-	1016

Location 3 (34th Ave and 11th St): Existing VS. With-Action Construction Auto/Truck Noise PCE Screening						
	With Action AM Peak Hour Vehicles	With Action AM Peak Hour Noise PCE Value	With Action MD Peak Hour Vehicles	With Action MD Peak Hour Noise PCE Value	With Action PM Peak Hour Vehicles	With Action PM Peak Hour Noise PCE Value
Car/ Taxi	410	410	416	416	499	499
Van/Light Truck/SUV	0	0	0	0	0	0
Medium Truck	38	494	21	273	24	312
Heavy Truck	10	471	11	506	1	59
Bus	40	720	11	198	13	234
Total Noise PCE	-	2095	-	1393	-	1104
Noise PCE Increment	AM	497	MD	177	PM	88
% Increase		**31%**		**15%**		**9%**

***Notes:**

Evaluates Existing Vehicle Counts at Noise Location 3 (34th Avenue and 11th Street) and Incremental Project Generated Construction Worker Vehicles/Trucks at Traffic Study Intersection 5 (34th Avenue and 11th Street)

All incremental project generated trucks assumed Heavy

All numbers rounded to the nearest whole

Location 4 (12th St btwn 34th Ave and 33rd Rd): Existing Noise PCE Value						
	Existing Vehicle Counts AM	Existing AM Peak Hour Noise PCE Value	Existing Vehicle Counts MD	Existing MD Peak Hour Noise PCE Value	Existing Vehicle Counts PM	Existing PM Peak Hour Noise PCE Value
Car/ Taxi	76	76	129	129	140	140
Van/Light Truck/SUV	0	0	0	0	0	0
Medium Truck	9	117	3	39	4	52
Heavy Truck	0	0	0	0	0	0
Bus	5	90	1	47	3	54
Total Noise PCE	-	283	-	215	-	246

Location 4 (12th St btwn 34th Ave and 33rd Rd): Existing VS. With-Action Construction Auto/Truck Noise PCE Screening						
	With Action AM Peak Hour Vehicles	With Action AM Peak Hour Noise PCE Value	With Action MD Peak Hour Vehicles	With Action MD Peak Hour Noise PCE Value	With Action PM Peak Hour Vehicles	With Action PM Peak Hour Noise PCE Value
Car/ Taxi	87	87	129	129	151	151
Van/Light Truck/SUV	0	0	0	0	0	0
Medium Truck	9	117	3	39	4	52
Heavy Truck	4	188	2	71	1	24
Bus	5	90	1	18	3	54
Total Noise PCE	-	482	-	257	-	281
Noise PCE Increment	AM	199	MD	42	PM	35
% Increase		**70%**		**19%**		**14%**

***Notes:**

Evaluates Existing Vehicle Counts at Noise Location 4 (12th Street between 34th Avenue and 33rd Road) and Incremental Project Generated Construction Worker Vehicles/Trucks at Site 1 (12th Street between 34th Avenue and 33rd Road)

All incremental project generated trucks assumed Heavy

All numbers rounded to the nearest whole

Construction PCE Assignments

Weekday AM Total Construction Worker Passenger Car Trips

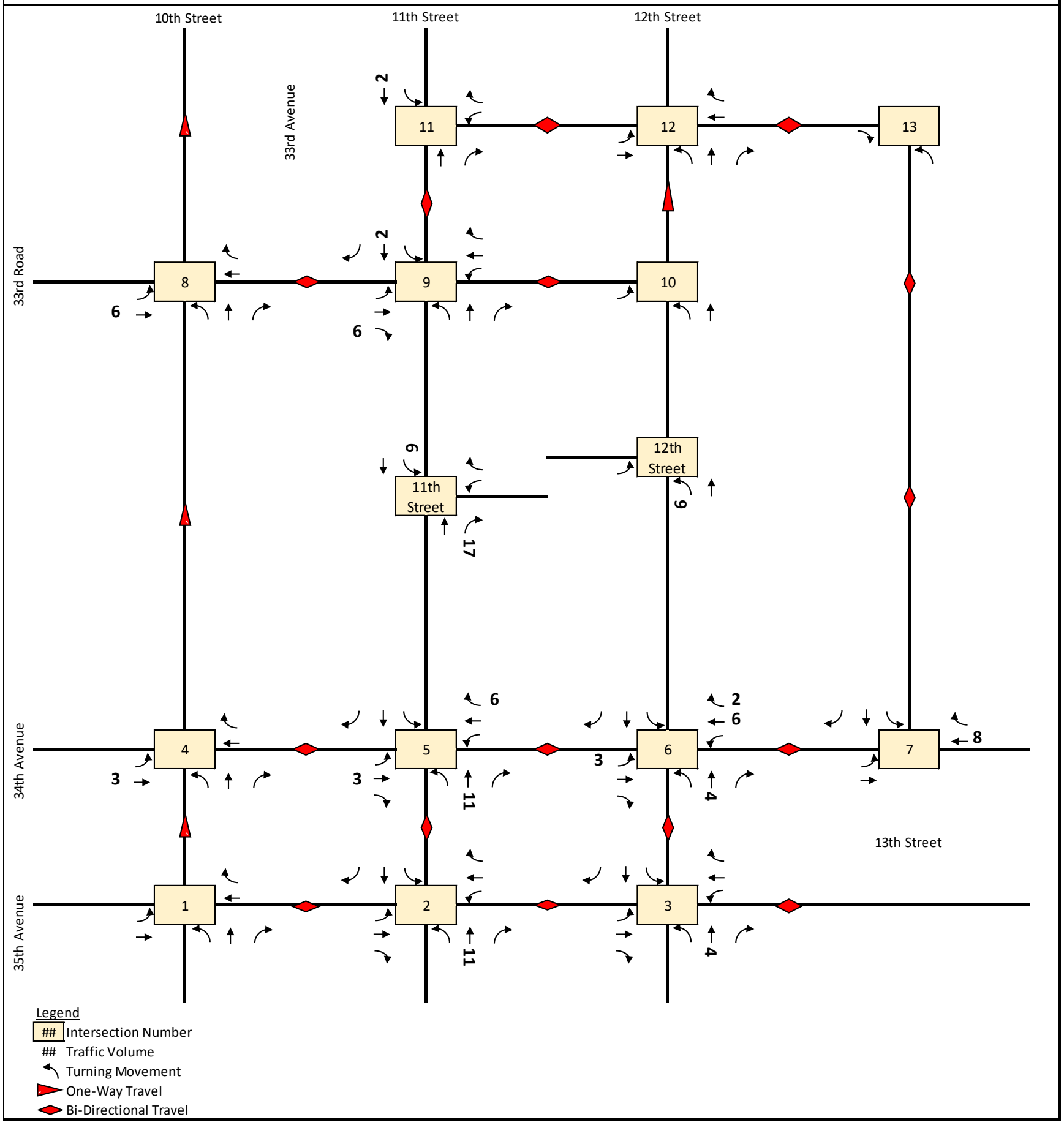

Weekday AM Total Construction Worker Taxi Trips

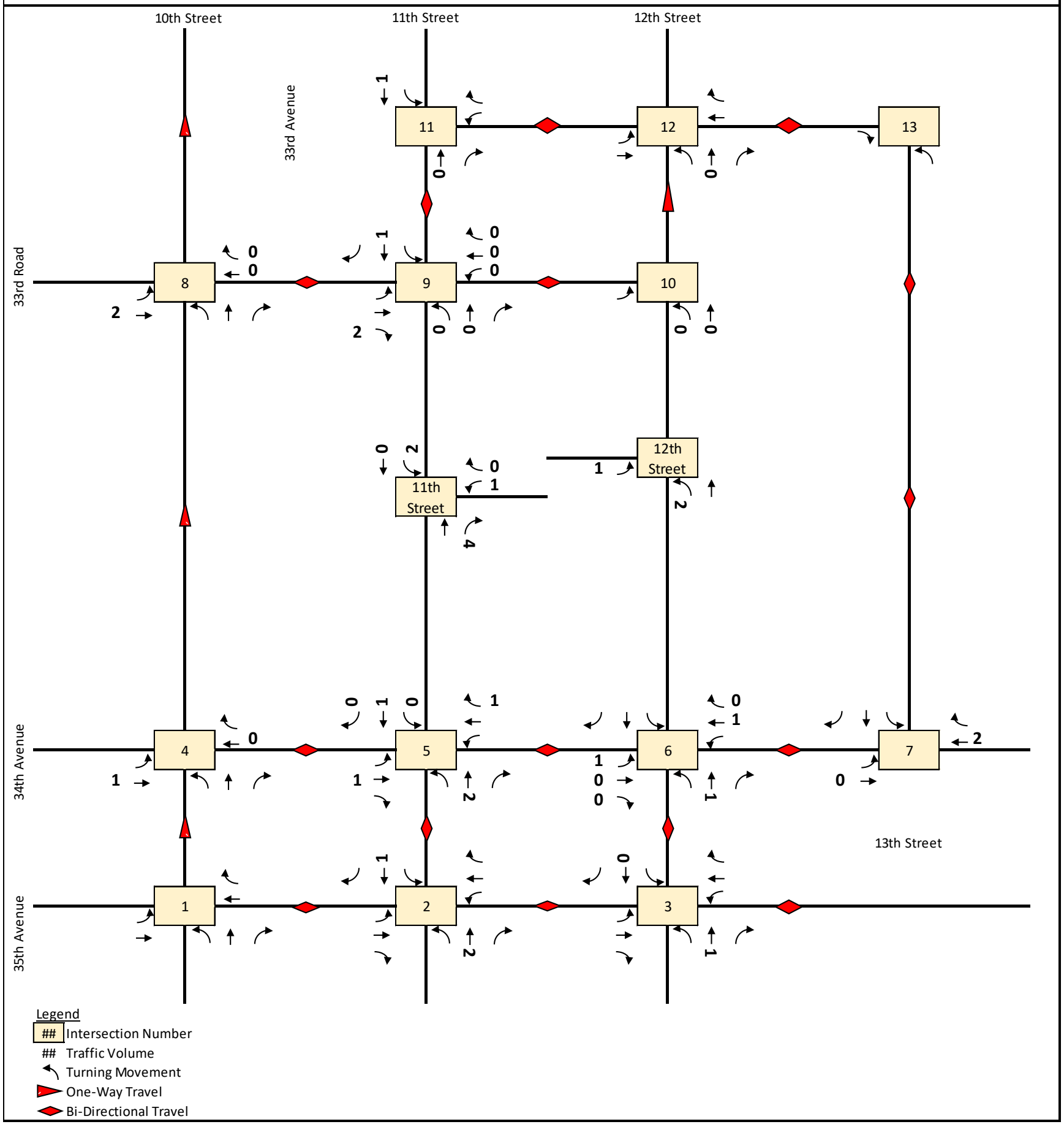

Weekday AM Total Construction Truck Trips

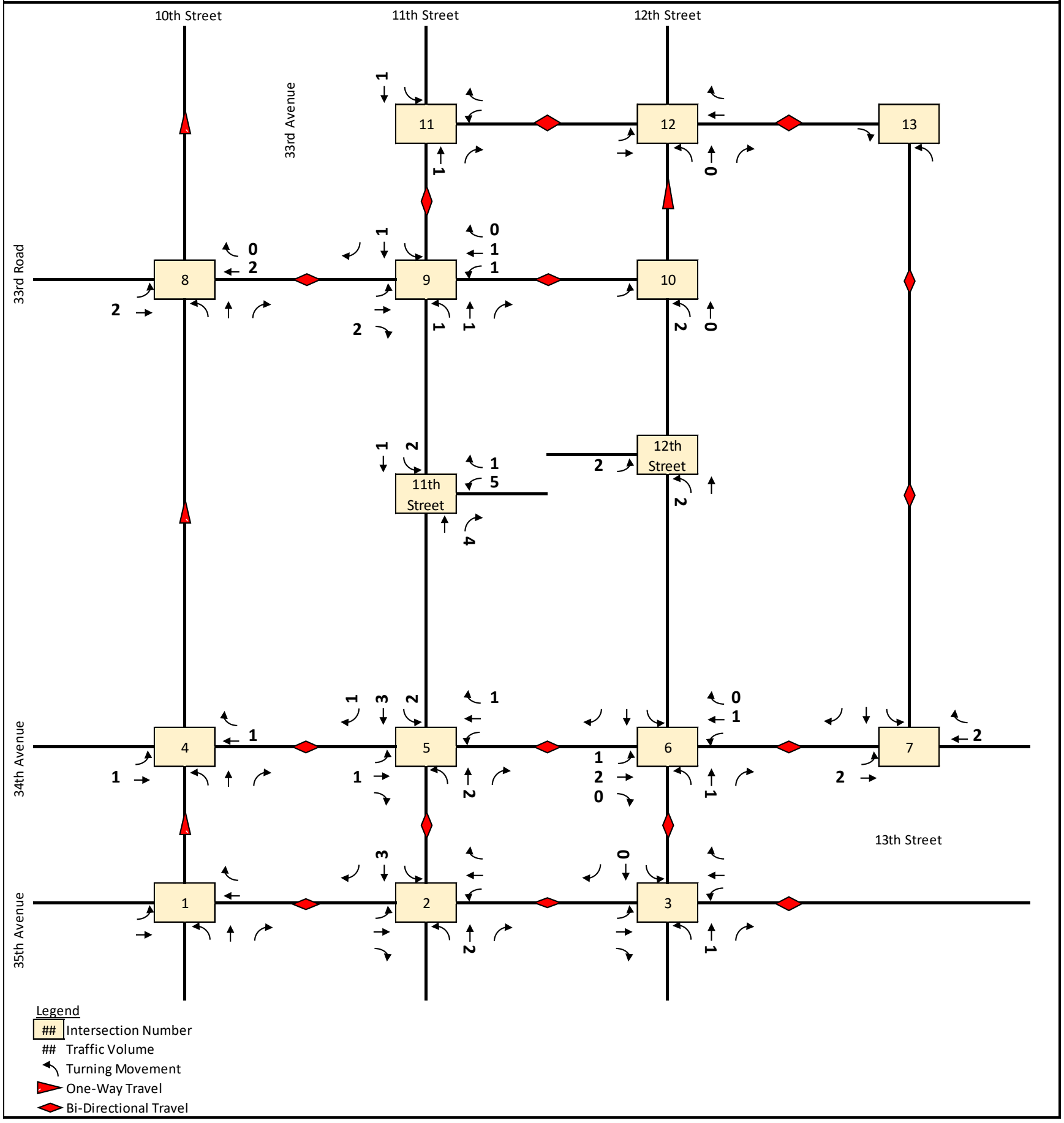

***No Traffic PCE factor applied to truck trips to reflect number of axles – assignments show raw # of project-generated trucks**

Weekday MD Total Construction Truck Trips

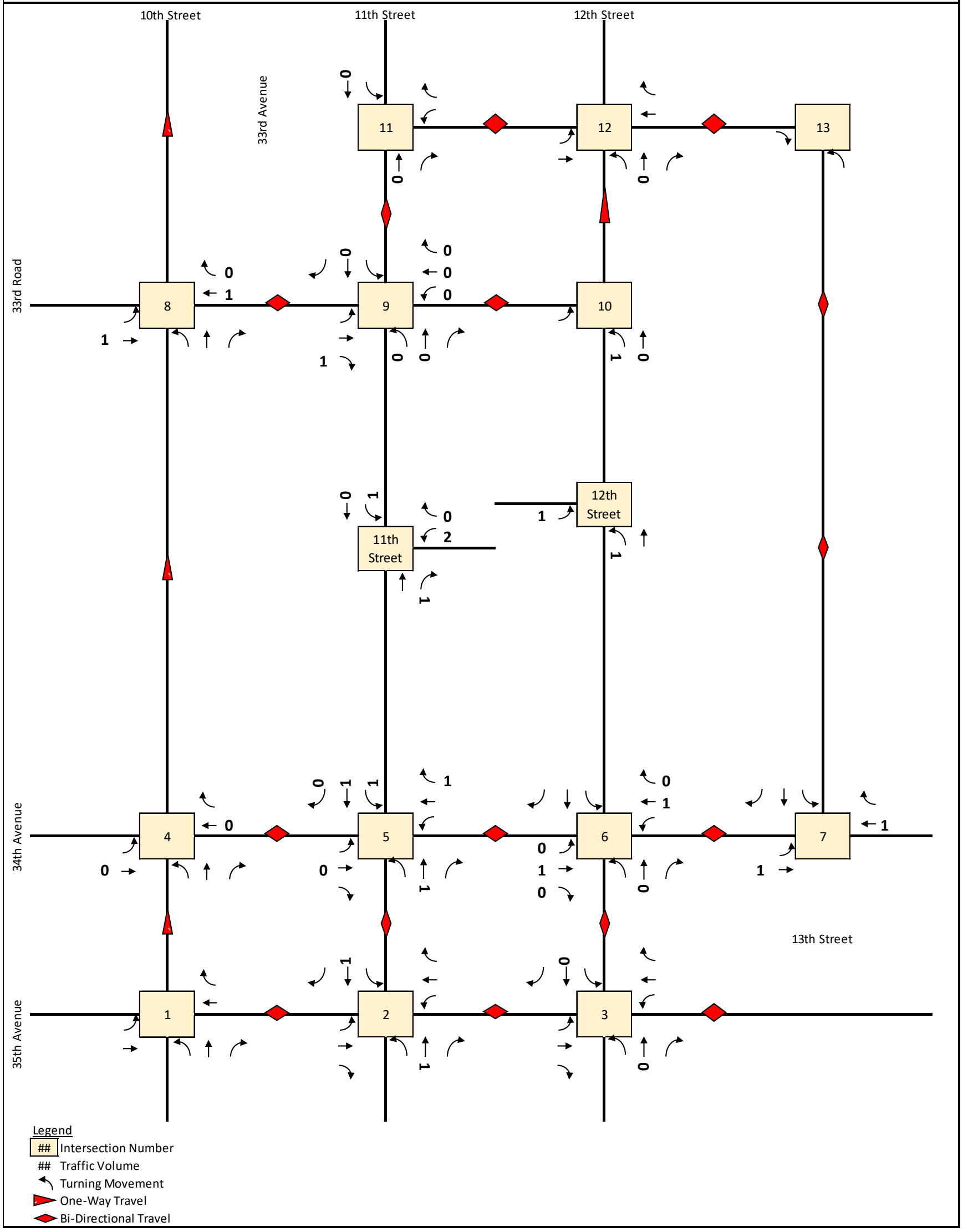

*No Traffic PCE factor applied to truck trips to reflect number of axles – assignments show raw # of project-generated trucks

Weekday PM Total Construction Worker Passenger Car Trips

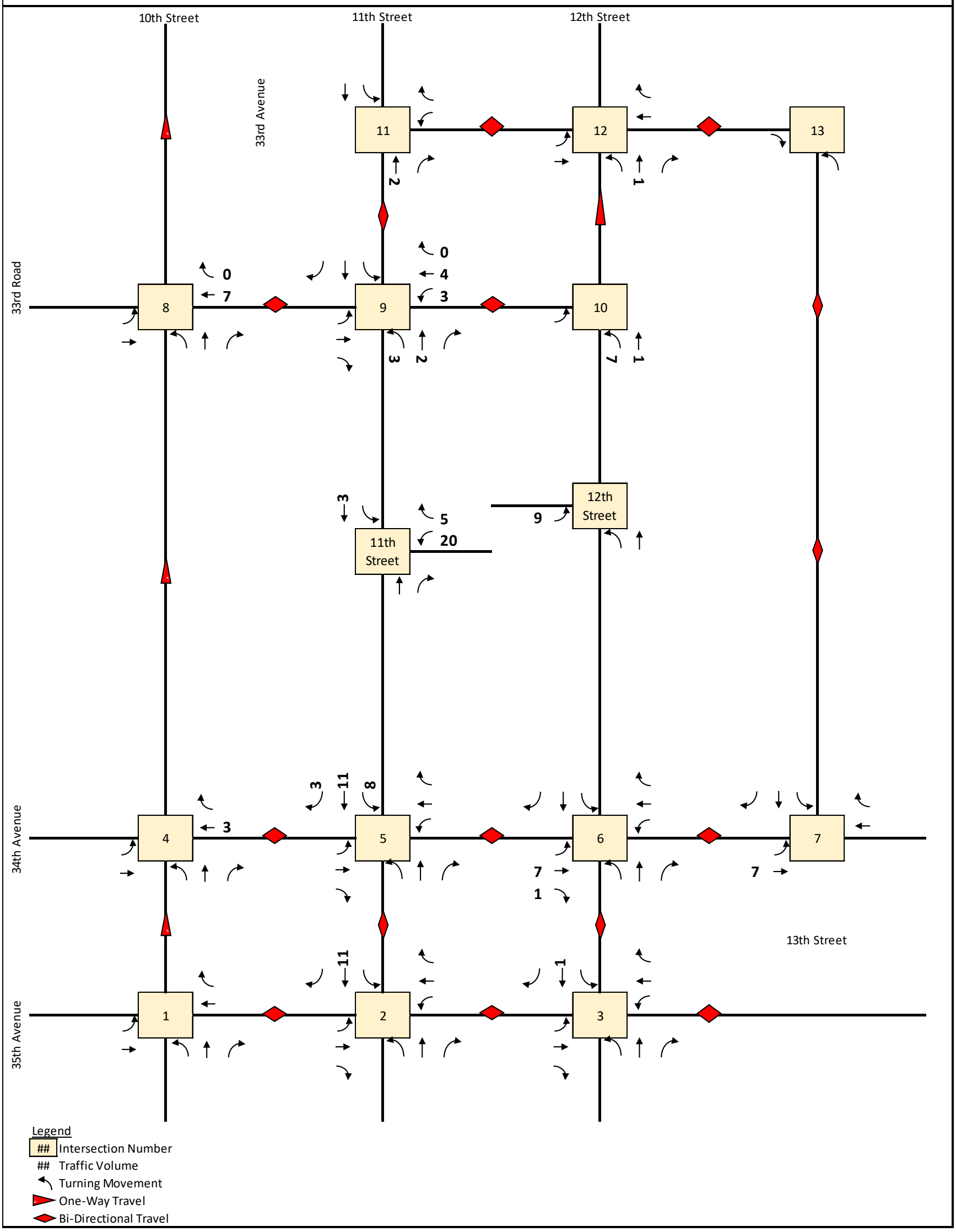

Weekday PM Total Construction Worker Taxi Trips

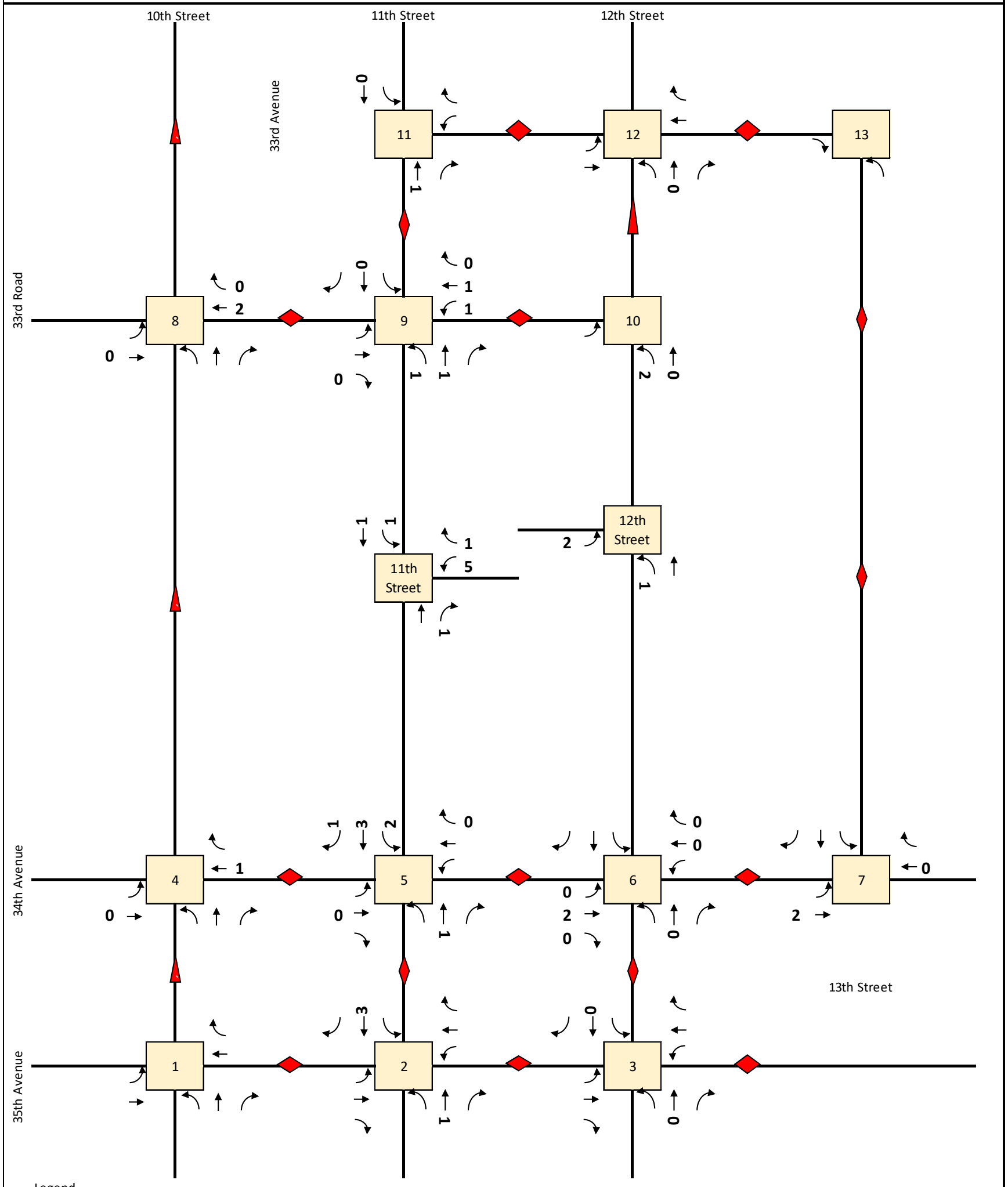

Weekday PM Total Construction Truck Trips

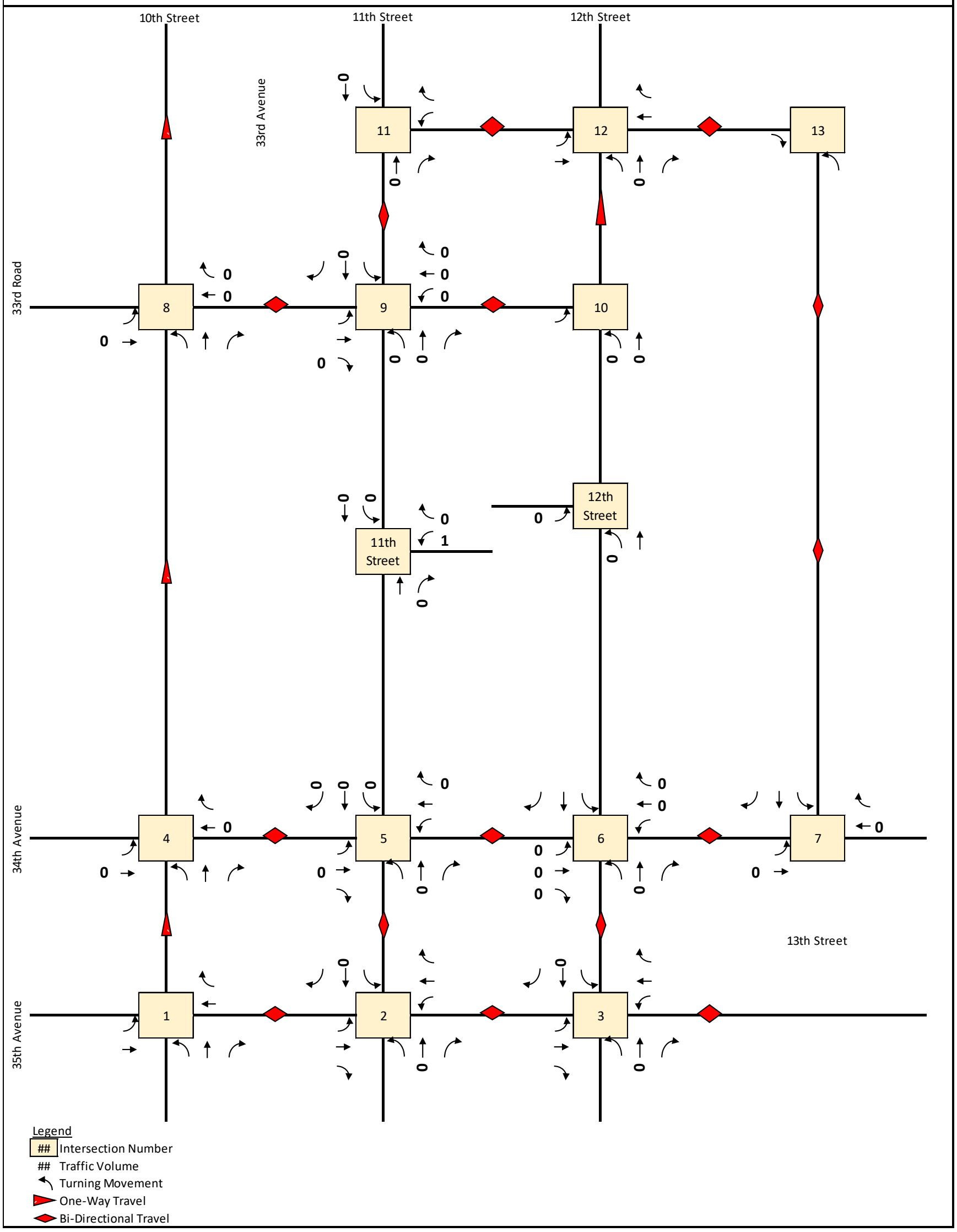

***No Traffic PCE factor applied to truck trips to reflect number of axles – assignments show raw # of project-generated trucks**

Peak Hour Construction Vehicle Assignments/Intersection Summary
*Traffic truck PCE factor of 2.0 applied to trucks to reflect number of axles

Weekday AM Total Construction Worker Passenger Car Trips

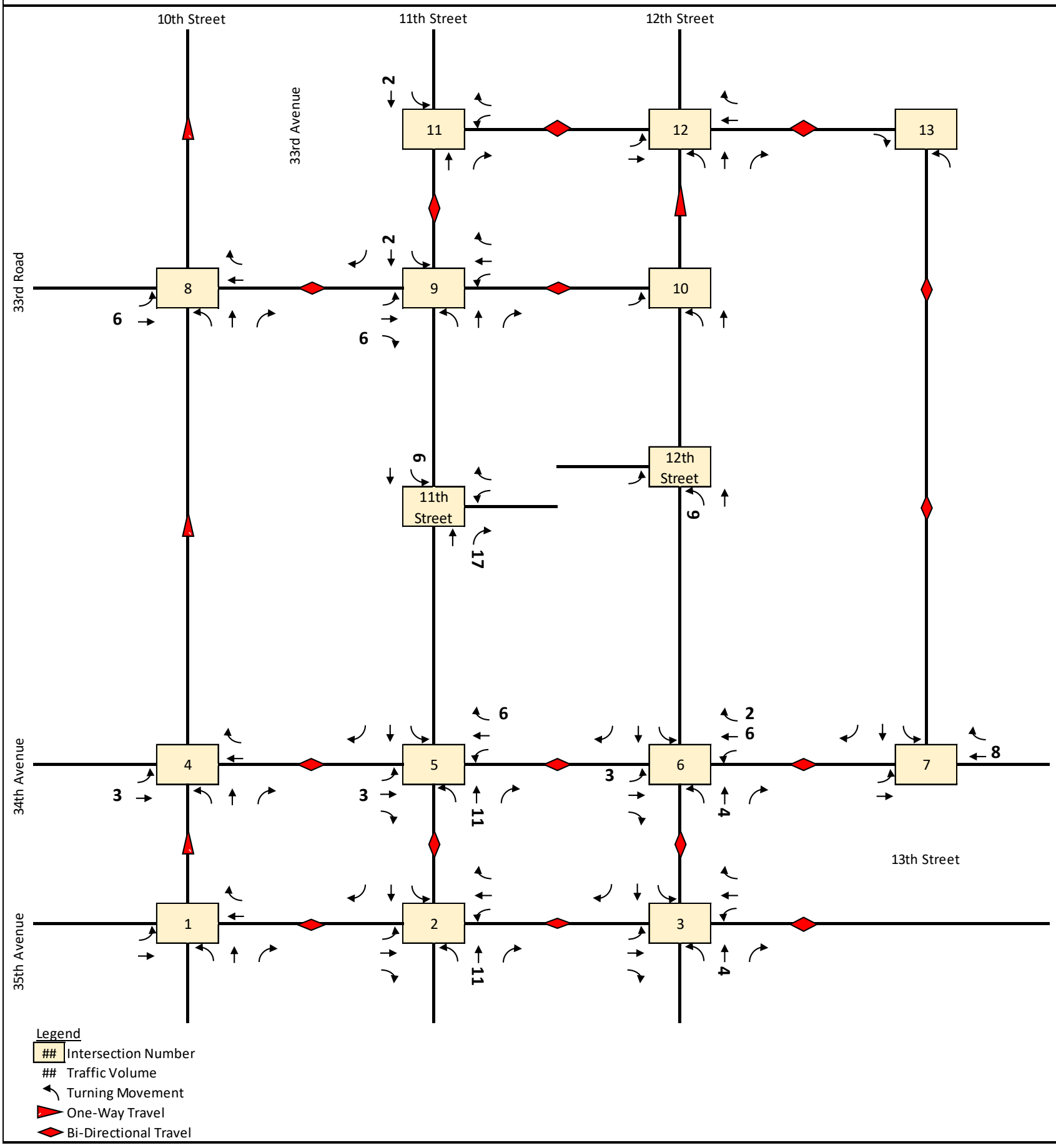

Weekday AM Total Construction Worker Taxi Trips

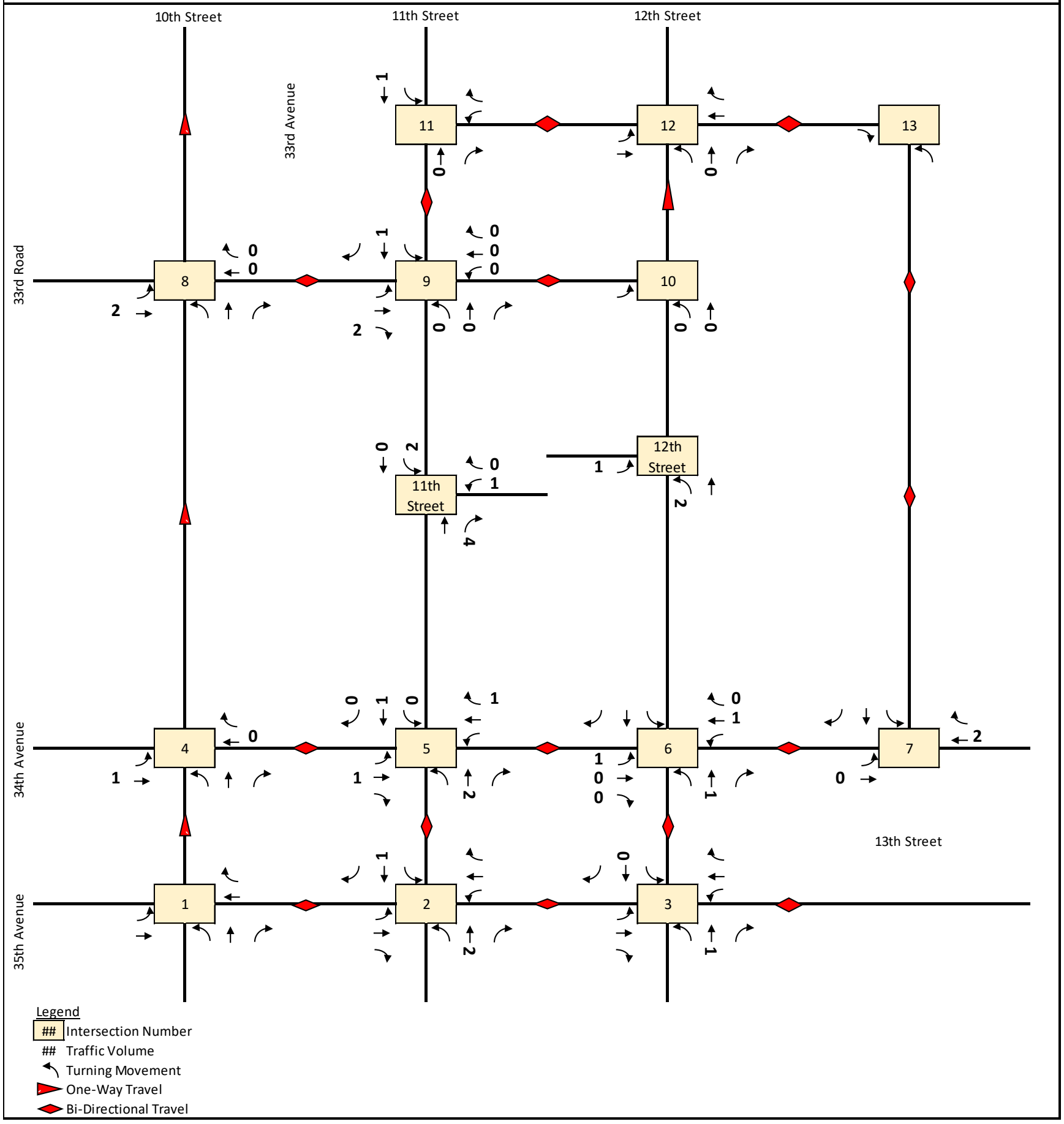

Weekday AM Total Construction Truck PCE Trips

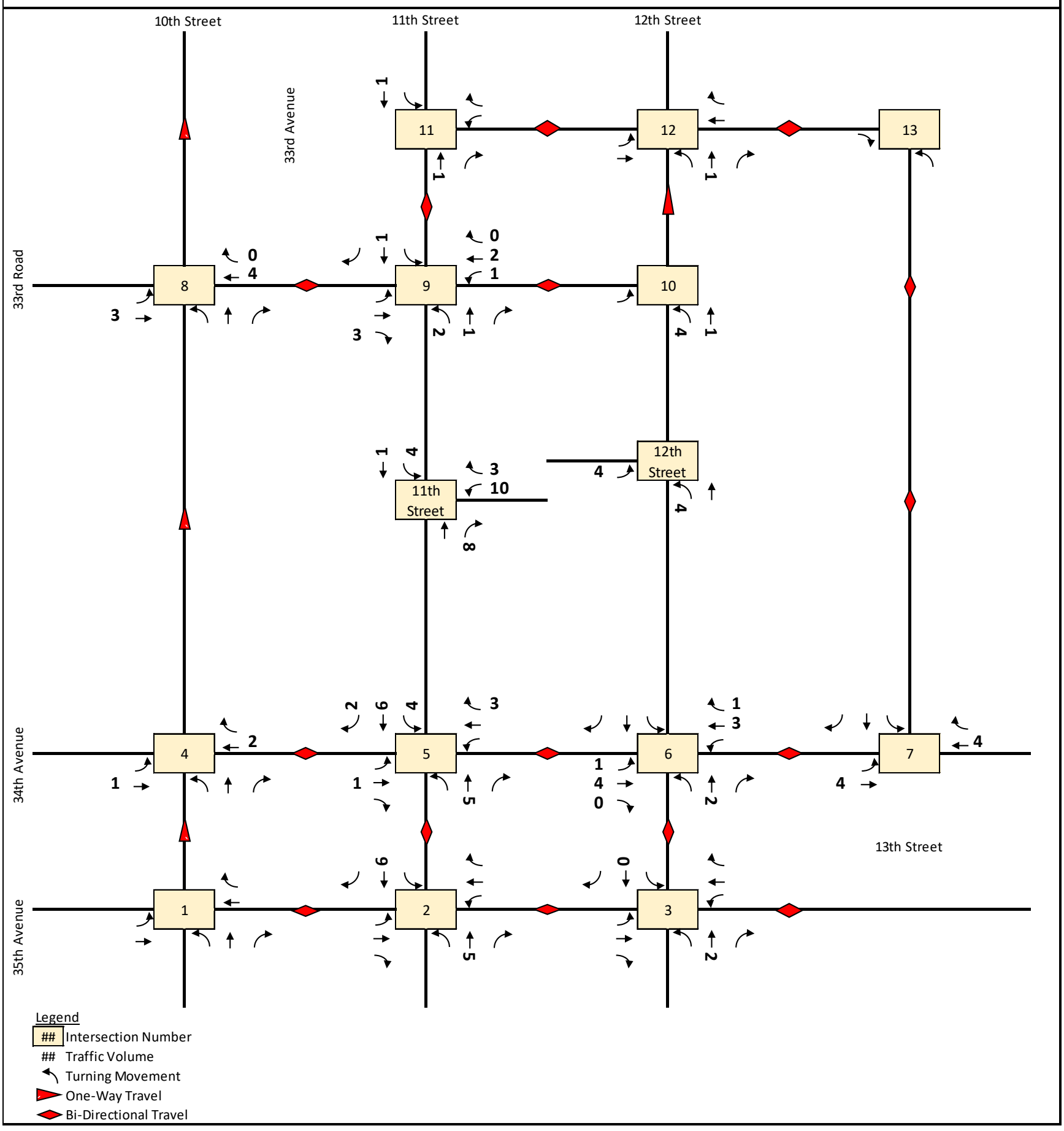

Weekday AM Intersection Summary (Construction)

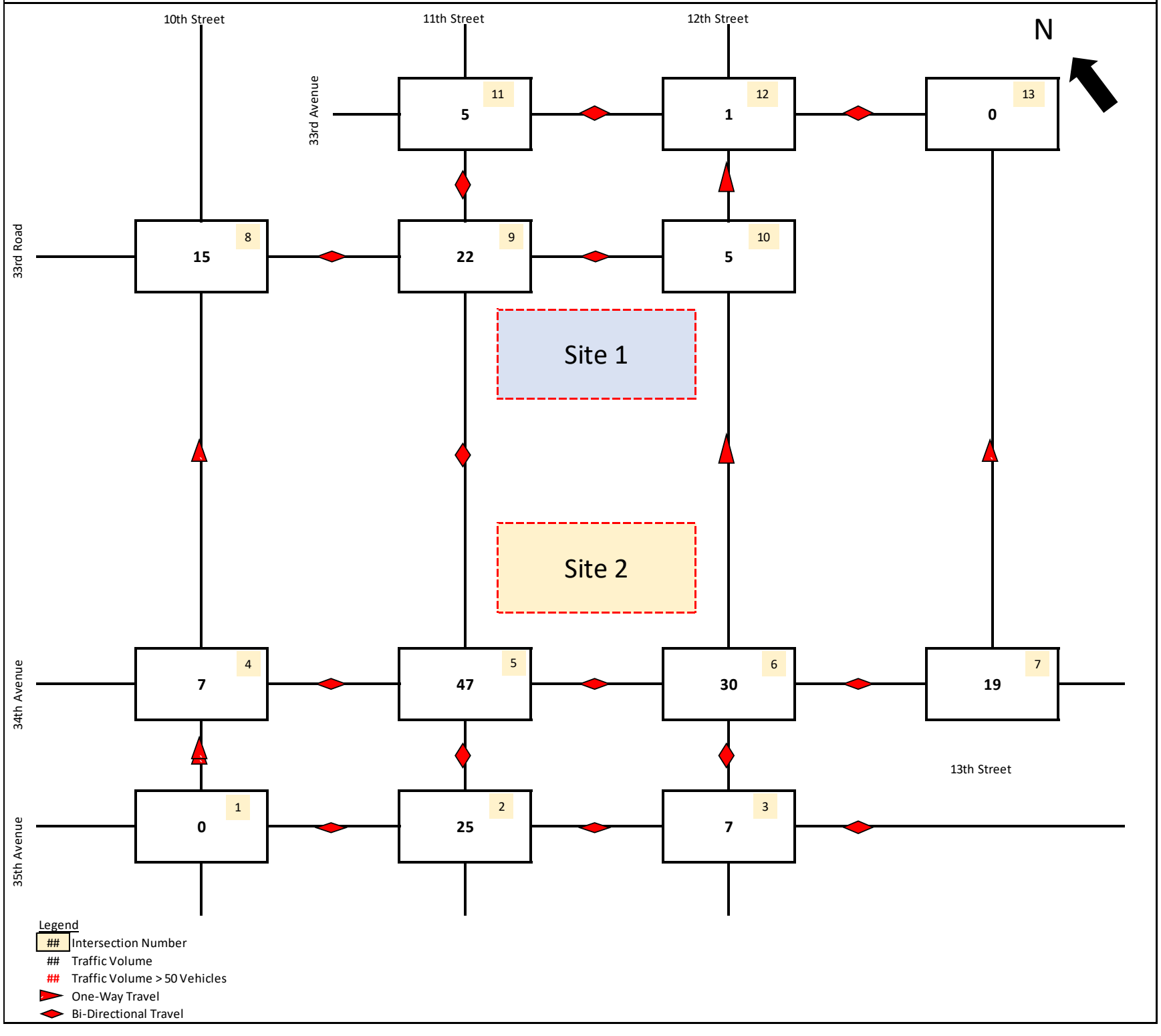

Weekday MD Total Construction Truck PCE Trips

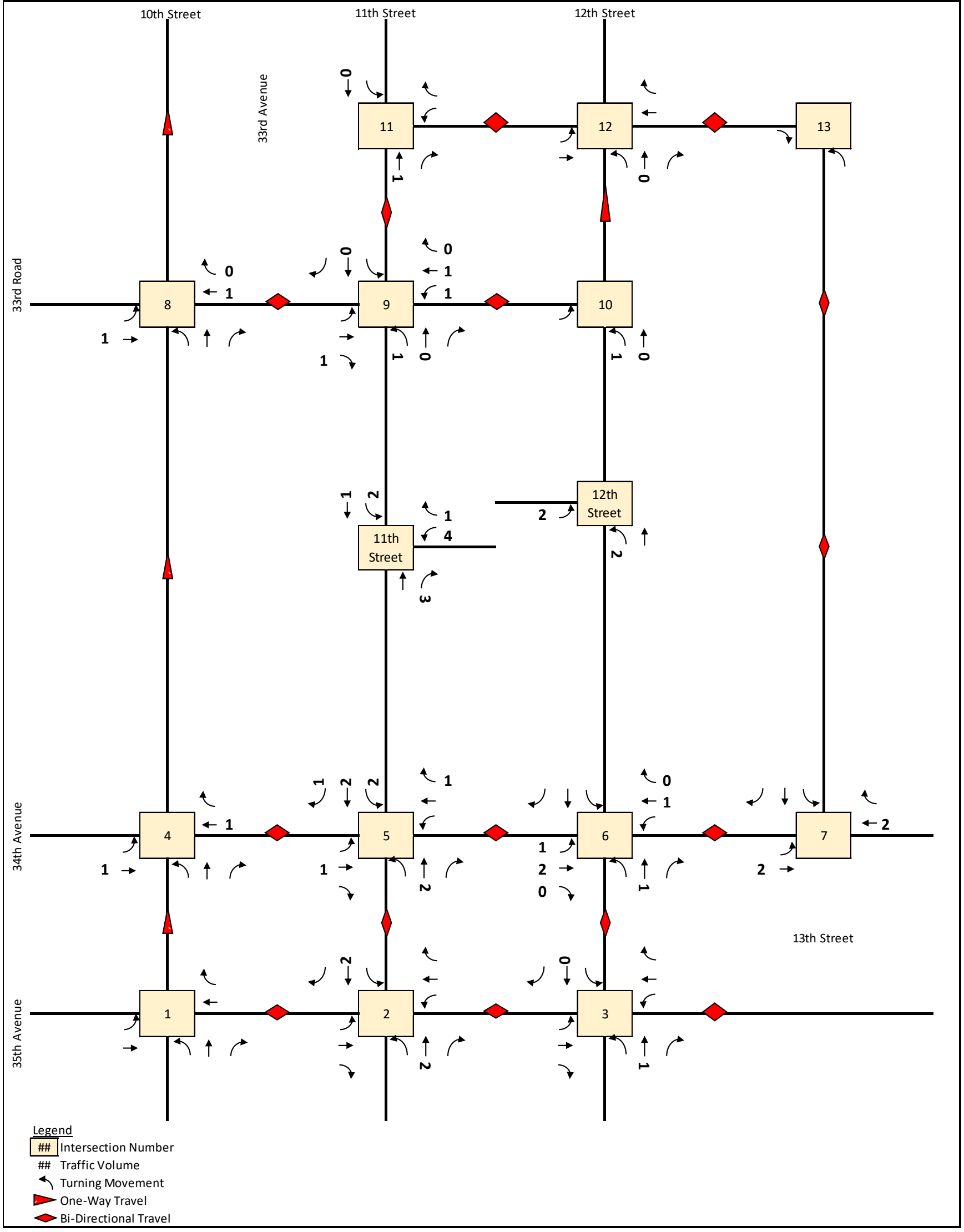

Weekday MD Intersection Summary (Construction)

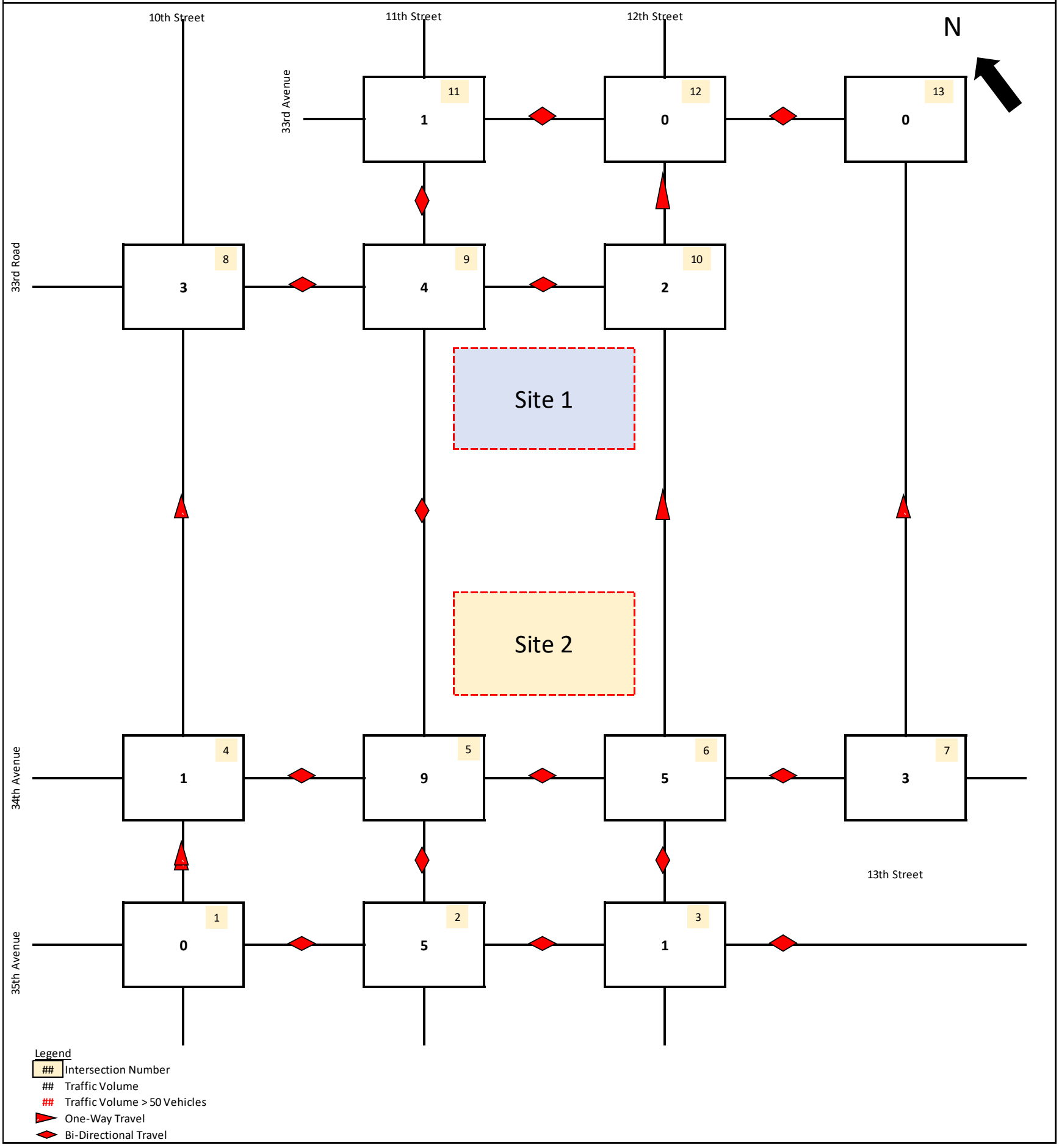

Weekday PM Total Construction Worker Passenger Car Trips

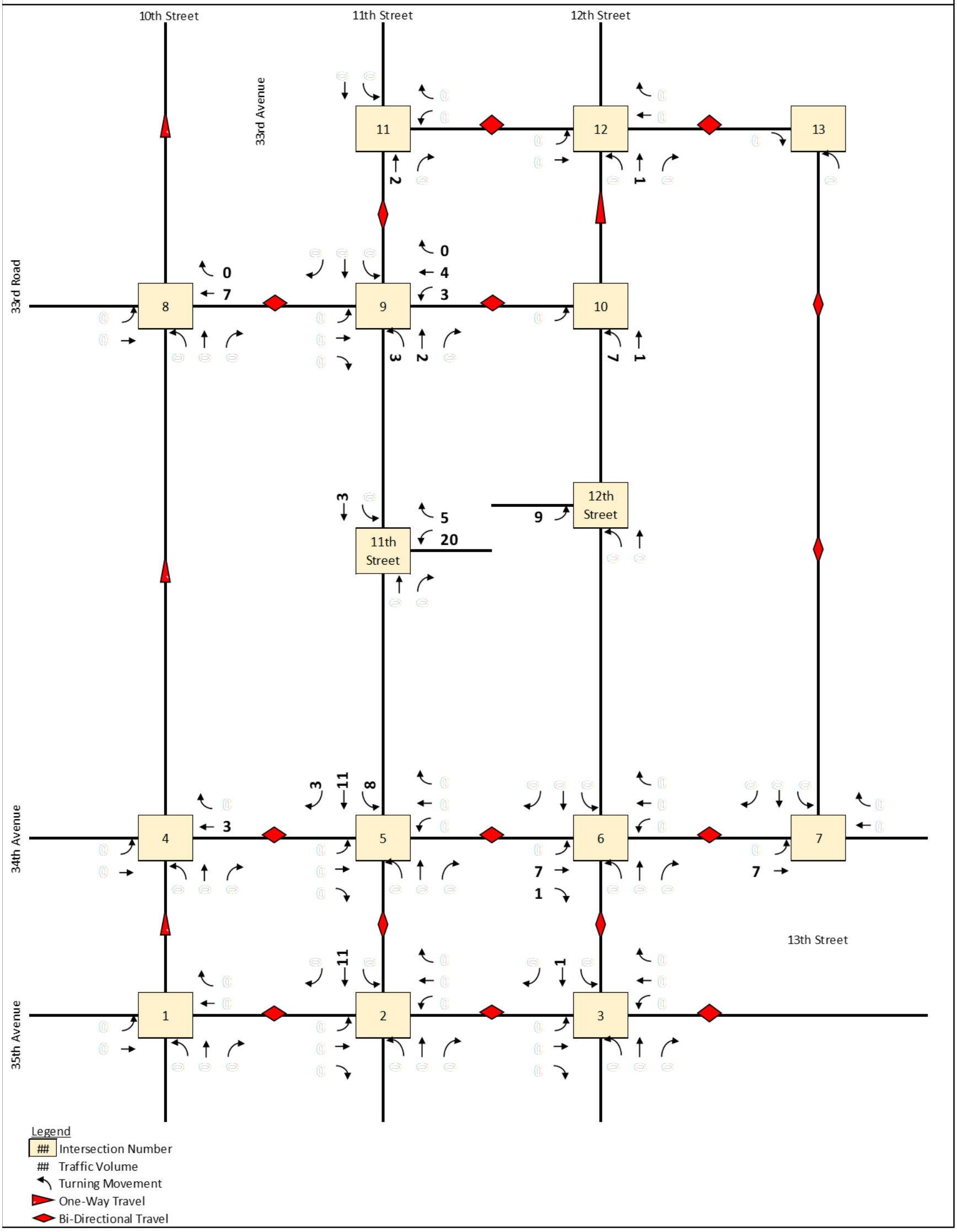

Weekday PM Total Construction Worker Taxi Trips

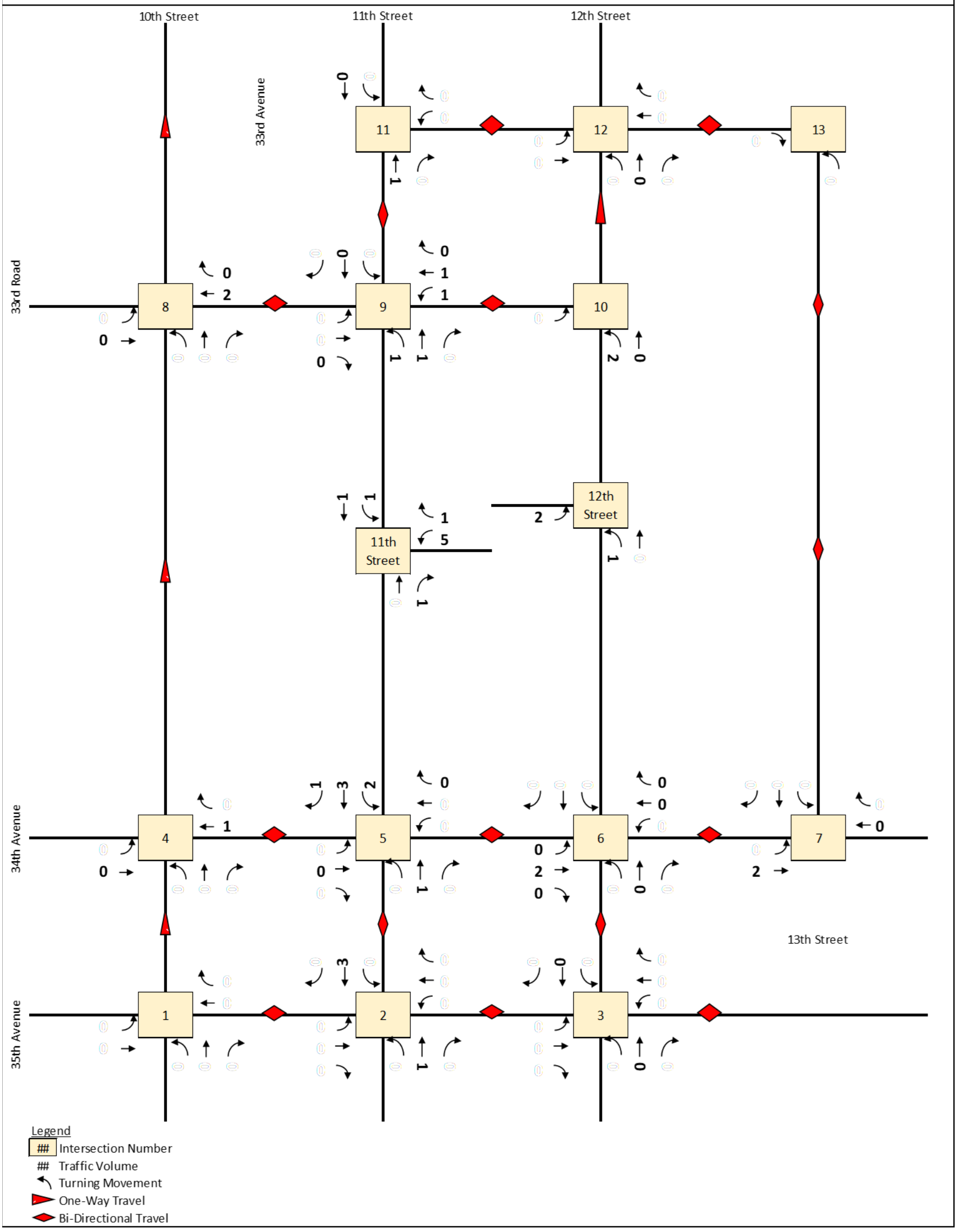

Weekday PM Total Construction Truck PCE Trips

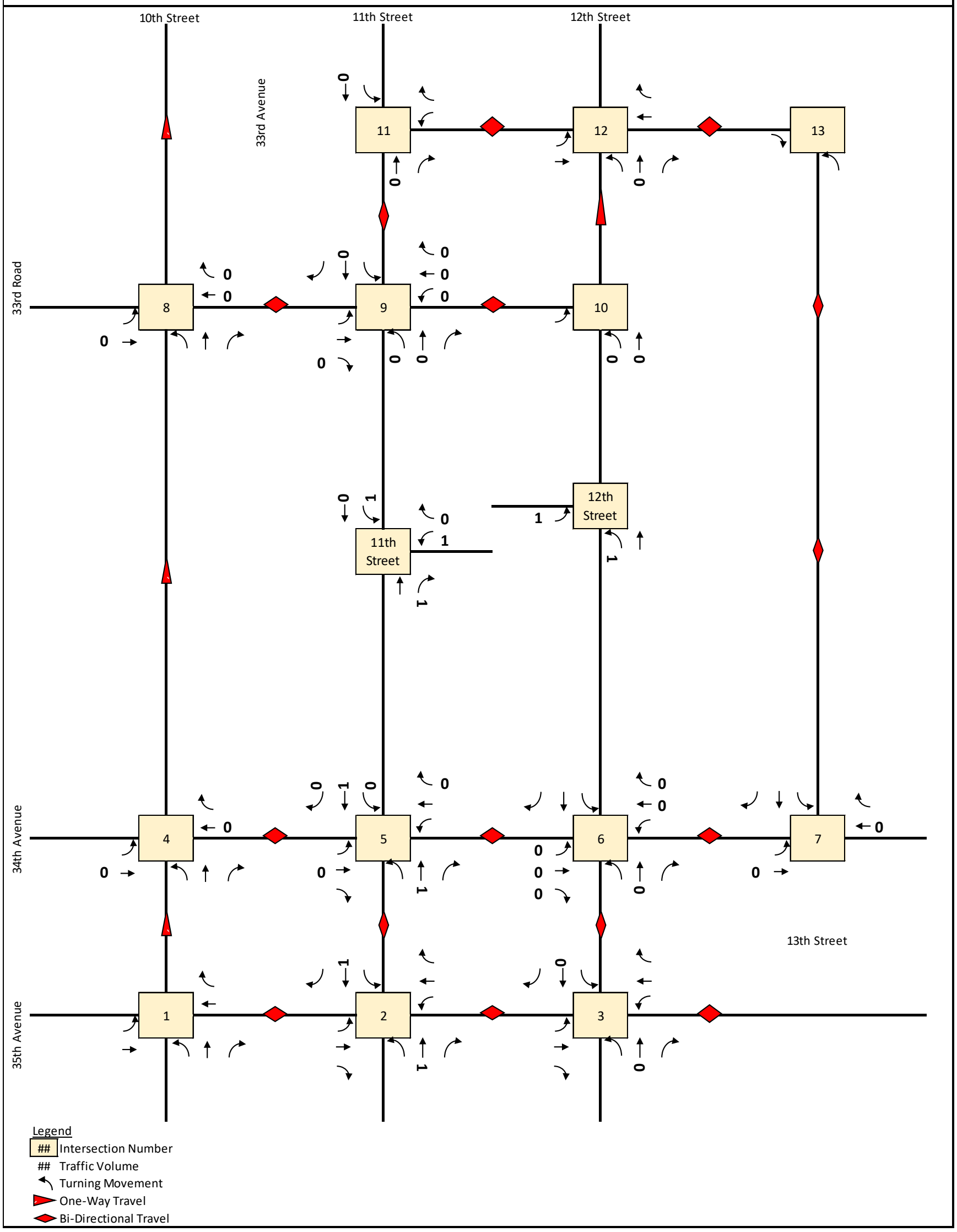

Weekday PM Intersection Summary (Construction)

