Appendix D

BMP Concept Plan

The following Best Management Practices (BMPs) Concept Plan is intended to illustrate the ways that BMPs could be integrated into the development which is expected to occur with the proposed rezoning action. The concept plan addresses this primarily though a description of the proposed building form for each zoning district throughout the proposed rezoning area. New development would be likely to use water conserving fixtures and appliances, like low-flow shower heads and toilets and side-loading washing machines.

R6A

As described in the project description, portions of six blocks currently zoned R8 in Hamilton Heights would be rezoned to R6A. Unlike the existing R8 and R7-2 zoning, the proposed R6A zoning district would mandate street wall and maximum building heights. It would also reduce the maximum residential FAR from 6.02 FAR (7.2 FAR on wide streets) in R8 districts and 3.44 (4.0 on wide streets) in R72- districts to 3.0 FAR, respectively. Community facility development would permit up to 3.0 FAR. Maximum lot coverage in the R6A district is 80 percent on a corner lot and 65 percent on an interior lot. A 30 foot rear yard is required.

The bulk diagram below shows the maximum building envelope of a typical building in an R6A district.

Stormwater best management practices for this type of development include green roofs and blue roofs, which would retain or detain stormwater and release with slowed discharge rates to control peak runoff rates. Underground detention tanks or pipe systems would capture the rear yard and other at-grade stormwater. There are 2 lots in the proposed R6A.

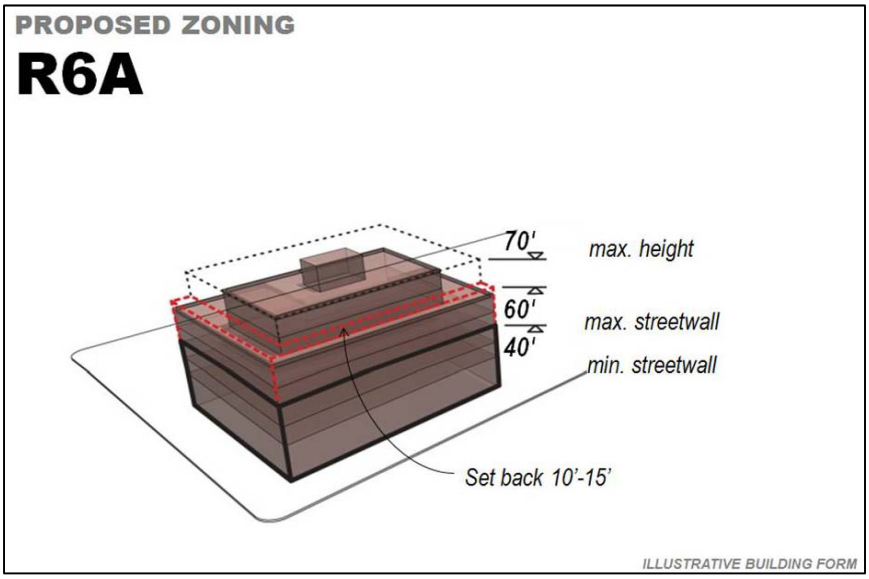

R7A

R7A contextual zoning would replace existing R7-2 zoning throughout much of the primary study area in Hamilton Heights and in Manhattanville. The proposed R7A zoning district would mandate maximum building heights of 80 feet and street wall heights of 40 to 65 feet, and would allow residential FAR of 4.0 and community facility FAR of 4.0. The proposed R7A zoning would result in a reduction of the maximum permitted community facility development from 6.5 to 4.0 FAR. The mid-blocks proposed for R7A are characterized by mid-rise multi-family buildings interspersed with low-rise residential buildings. The building form encouraged by R7A regulations would result in residential buildings that are consistent with the scale, streetwall and density of the existing mid-block buildings. Maximum lot coverage in the R6A district is 80 percent on a corner lot and 65 percent on an interior lot. A 30 foot rear yard is required.

The bulk diagram below shows the maximum building envelope of a typical building in an R7A district.

Stormwater best management practices for this type of development include green roofs and blue roofs, which would retain or detain stormwater and release with slowed discharge rates to control peak runoff rates. Underground detention tanks or pipe systems would capture the rear yard and other at-grade stormwater. There are 8 lots in the proposed R7A district.

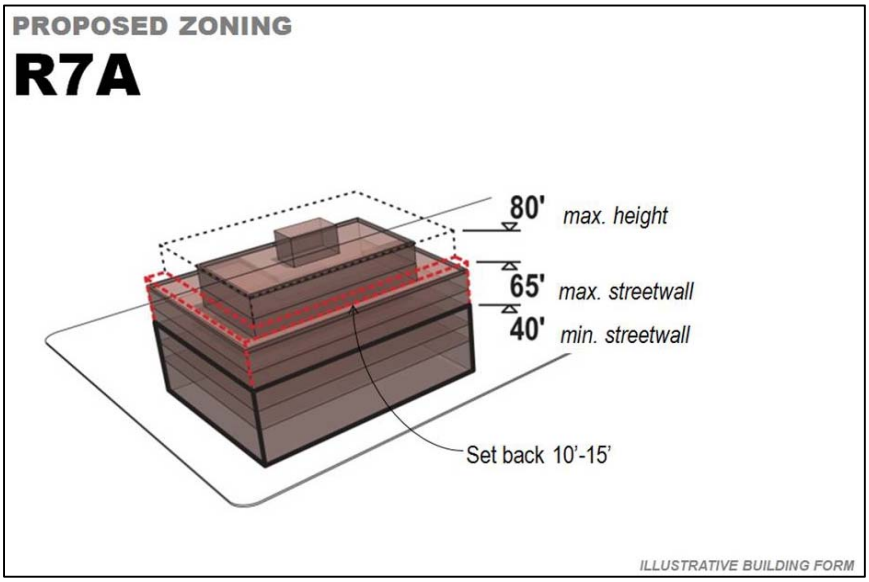

R8A

The Proposed Action would also replace existing R7-2 zoning districts along Edgecombe Avenue, West 155th Street and West 145th Street between St. Nicholas and Bradhurst avenues with the R8A zoning district in order to maintain the scale and street wall with the existing dense, mid-rise multi-family buildings within the area. R8A districts permit residential uses up to 6.02 FAR, community facility uses up to 6.5 FAR, maximum building heights of 120 feet, and

street wall heights of 60 to 85 feet. The proposed rezoning action would increase the permitted residential density from 3.44 to 6.02 FAR. Similar to existing R7-2 district, community facility development would be permitted up to 6.5 FAR. Maximum lot coverage in the R8A district is 80 percent on a corner lot and 70 percent on an interior lot. A 30 foot rear yard is required.

The bulk diagram below shows the maximum building envelope of a typical building in an R8A district.

Stormwater best management practices for this type of development include green roofs and blue roofs, which would retain or detain stormwater and release with slowed discharge rates to control peak runoff rates. Underground detention tanks or pipe systems would capture the rear yard and other at-grade stormwater. There are 2 lots in the proposed R8A district.

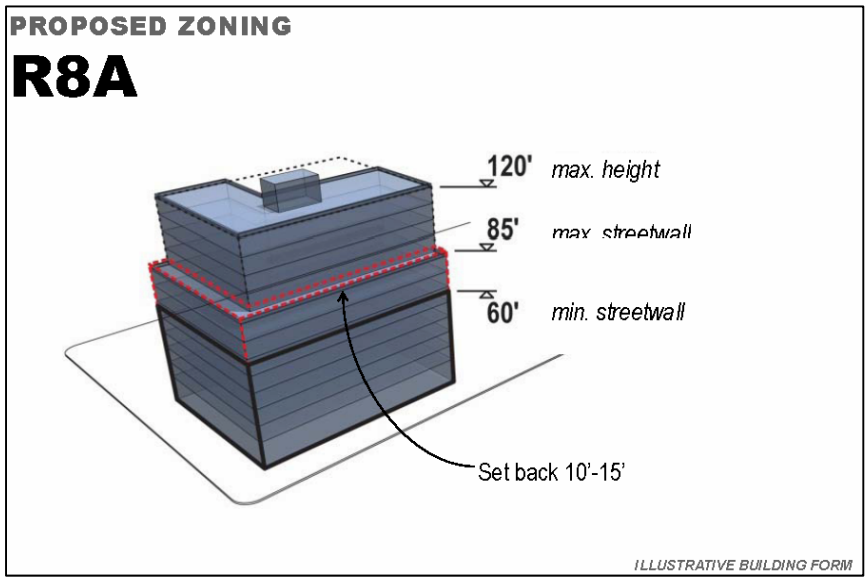

R8A IH

The Proposed Action would rezone portions of five blocks on both sides of West 145th Street from a point 100 feet east of Broadway to Amsterdam Avenue from R7-2 to R8A IH. R8A contextual districts have a maximum building height of 120 feet, and street wall heights of 60 to 85 feet. The Proposed Action would designate the R8A zoning district proposed for West 145th Street between Broadway and Amsterdam Avenue with the Inclusionary Housing Program. The proposed R8A IH district a base residential density of 5.4 FAR bonusable to 7.2 FAR achievable with the Inclusionary Housing bonus within this area. The residential density allowed under R8A IH using the Inclusionary Housing bonus is equivalent to the maximum residential density that is currently allowed under the Quality Housing option. Community facilities would be allowed up to 6.5 FAR, as currently allowed under the existing R7-2 district regulations. The proposed R8A district is intended to provide a useful incentive to develop affordable housing and enhance future development opportunities for the West 145th Street corridor. Maximum lot coverage in the R8A IH district is 80 percent on a corner lot and 70 percent on an interior lot. A 30 foot rear yard is required.

The bulk diagram below shows the maximum building envelope of a typical building in an R8A IH district.

Stormwater best management practices for this type of development include green roofs and blue roofs, which would retain or detain stormwater and release with slowed discharge rates to control peak runoff rates. Underground detention tanks or pipe systems would capture the rear yard and other at-grade stormwater. There are 3 lots in the proposed R8A IH district.

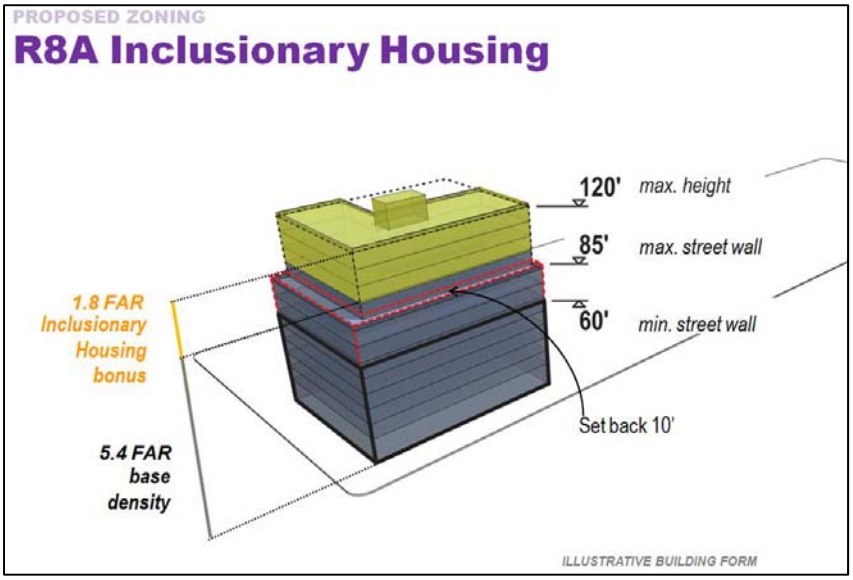

C6-3X

The Proposed Action would map a C6-3X contextual zoning district at the intersection of West 145th Street and Broadway on the four corners to a depth of 100 feet replacing the existing R8/C1-4 zoning. As part of the Proposed Action, the Inclusionary Housing designation would be made applicable to the C6-3X zoning district through a zoning text amendment. The C6-3X District would allow residential uses up to 7.3 FAR, bonusable to 9.7 FAR through the Inclusionary Housing bonus. Commercial uses would be allowed up to 6.0 FAR and could be located above the ground floor in mixed residential/commercial buildings. Community facility uses would be allowed up to 9.0 FAR. The proposed C6-3X district would increase the permitted density of residential, community facility, and commercial development. The street wall could rise 105 to 120 feet, above which it could rise to a maximum height of 170 feet. The proposed C6-3X zoning district expands future development opportunity at the West 145th Street/Broadway intersection, which is well-served by mass transit. Maximum lot coverage in the C6-3X district is 80 percent on a corner lot and 70 percent on an interior lot. A 30 foot rear yard is required.

The bulk diagram below shows the maximum building envelope of a typical building in a C6-3X district.

Stormwater best management practices for this type of development include green roofs and blue roofs, which would retain or detain stormwater and release with slowed discharge rates to control peak runoff rates. Underground detention tanks or pipe systems would capture the rear yard and other at-grade stormwater. There are 2 lots in the proposed C6-3X district.

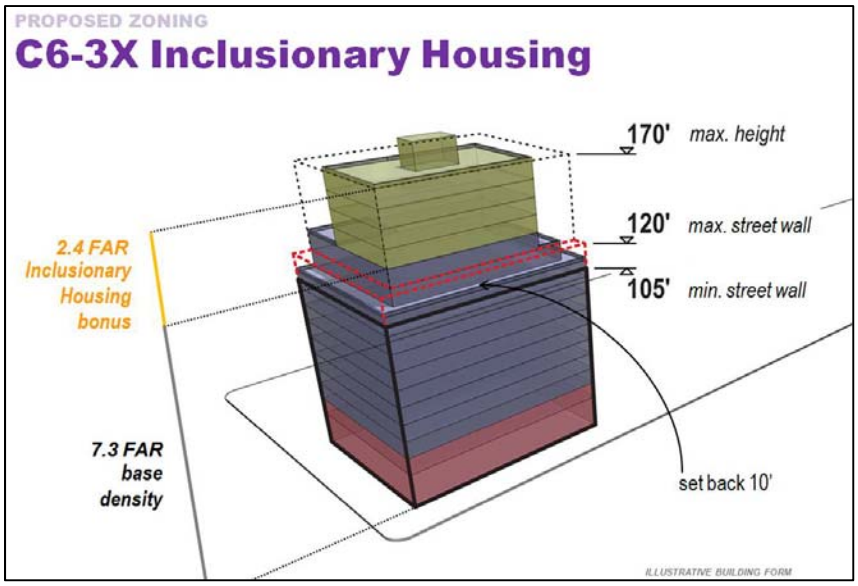

MX (M1-5/R7-2)

A new Special Mixed Use District (MX 15) would be mapped on portions of four blocks generally bounded by West 126th and West 129th streets, and Amsterdam and Convent avenues in Manhattanville within the southern portion of the primary study area. The Special Mixed Use District is a special zoning districts that is currently mapped in several locations throughout the City that combines a light industrial (M1) district with a residential district and permits a mixed of selected light industrial, commercial, residential, and community facility uses under the applicable regulations. The MX district permits mixed-use buildings.

No front yards or side yards are required in Special Mixed Use Districts. However, if any open area extending along a side lot line is provided at any level, such open area shall have a minimum width of eight feet; except, if the mixed use building contains no more than two dwelling units, the open area extending along a side lot line may be less than eight feet in width at the level of the dwelling unit. For a residential portion of a mixed use building, the rear yard shall be provided at the floor level of the lowest story containing dwelling units or rooming units where any window of such dwelling units or rooming units faces onto such rear yard. Lot coverage requirements do not apply for zoning lots containing mixed use buildings.

The bulk diagram below shows the maximum building envelope of a typical building in an MX district.

Stormwater best management practices for this type of development include green roofs and blue roofs, which would retain or detain stormwater and release with slowed discharge rates to control peak runoff rates. Underground detention tanks or pipe systems would capture the rear yard and other at-grade stormwater. There are 6 lots in the proposed MX district.

