REVSIED ENVIRONMENTAL ASSESSMENT STATEMENT (EAS) AND SUPPLEMENTAL STUDIES TO THE EAS

1010 Pacific Street Rezoning

*Revised Environmental Assessment Statement

1010 Pacific Street
Brooklyn, NY

Prepared for:
1010 Pacific Street LLC
65 Vestry Street
New York, NY 10013

Prepared by:
AECOM USA, Inc.
125 Broad Street
New York, NY 10004

* Shortly after certification of the above referenced application, an error was identified in the 1010 Pacific Street Rezoning EAS, as described below. The EAS has been updated to correct this error and has been distributed and published. This correction does not alter any of the conclusions of the EAS.

An error, which occurred due to an oversight, was identified in the EAS. On page 4 of the EAS form, the first item listed under Section 2(a) was checked “no” and should have been checked “yes” with a corresponding preliminary socioeconomic conditions analysis. The EAS has been updated to include a preliminary socioeconomic conditions analysis. This correction does not alter the conclusions of the EAS.

This Revised EAS and appended Technical Memorandum supersede the EAS issued on on October 29th, 2018 for the 1010 Pacific Street Rezoning Proposal (CEQR # 16DCP134K). Since certification of the proposal, the applicant has revised the proposed zoning map amendment over Brooklyn Block 1133, Lots 32, 42 , 43, 44, 45, 46, 47, 48, 49, 51, 52, and 53 from an M1-1 to an R7A/C2-4 zoning district. The first proposal called for an R7D/C2-4 zoning district. This revised EAS and tech memo reflect the updated zoning map amendment and updated Projected Development Site Future With-Action Scenarios. As the updated proposal contains a lower density district, this updated proposal would not alter the conclusions of the original EAS, which found no significant adverse impacts. This revised EAS reflects the updated proposed project, including the potential CPC modifications, and any changes to E-Designations.

October 29th, 2018

*Revised April 5th, 2019

City Environmental Quality Review
ENVIRONMENTAL ASSESSMENT STATEMENT (EAS) SHORT FORM

FOR UNLISTED ACTIONS ONLY • *Please fill out and submit to the appropriate agency* (see instructions)

Part I: GENERAL INFORMATION

1. *Does the Action Exceed Any Type I Threshold in 6 NYCRR Part 617.4 or 43 RCNY §6-15(A) (Executive Order 91 of 1977, as amended)?* ☐ YES ☒ NO

If "yes," **STOP** and **complete the FULL EAS FORM**.

2. *Project Name* 1010 Pacific Street Rezoning

3. *Reference Numbers*

CEQR REFERENCE NUMBER (to be assigned by lead agency)	BSA REFERENCE NUMBER (if applicable)
16DCP134K	
ULURP REFERENCE NUMBER (if applicable)	OTHER REFERENCE NUMBER(S) (if applicable) (*e.g.*, legislative intro, CAPA)
180042ZMK, N180043ZRK	

4a. *Lead Agency Information*			**4b. *Applicant Information***		
NAME OF LEAD AGENCY New York City Department of City Planning			NAME OF APPLICANT 1010 Pacific Street LLC		
NAME OF LEAD AGENCY CONTACT PERSON Robert Dobruskin			NAME OF APPLICANT'S REPRESENTATIVE OR CONTACT PERSON Richard Lobel		
ADDRESS 120 Broadway, 31st Floor			ADDRESS 18 East 41st Street		
CITY New York	STATE NY	ZIP 10271	CITY New York	STATE NY	ZIP 10017
TELEPHONE (212) 720-3423	EMAIL rdobrus@planning.nyc.gov		TELEPHONE (212) 725-2727	EMAIL rlobel@sheldonlobelpc.com	

5. *Project Description*

The Applicant, 1010 Pacific Street LLC, seeks a zoning map amendment to rezone portions of Brooklyn Block 1133 from an M1-1 District to an R7D/C1-4 District, to facilitate the construction of an 11-story (plus cellar) mixed residential, commercial and community facility building with approximately 128 dwelling units at 1010 Pacific Street (Block 1133, Lots 32 and 42). The proposed development is anticipated to have a build year of 2023. The Applicant is also proposing a zoning text amendment to establish the rezoning area as a Mandatory Inclusionary Housing ("MIH") area mapped with MIH Option 1 and 2. The Applicant has selected MIH Option 1 to allocate 25 percent of the dwelling units in the proposed development as permanently affordable units at or below 60 percent of the Area Median Income ("AMI") with ten percent at or below 40 percent AMI. The proposed development would include approximately 138,685 gross square feet (gsf) (130,973 zoning square feet [zsf]) of residential floor area (5.06 FAR), approximately 8,458 gsf (8,458 zsf) of commercial floor area (0.33 FAR), and approximately 5,149 gsf (5,149 zsf) of community facility floor area (0.20 FAR). Given the combined lot size of approximately 25,896 square feet (sf), the approximately 152,292 gsf (144,580 zsf) proposed building would have a combined FAR of 5.59, which is permitted in an R7D/C1-4 district.

Project Location

BOROUGH Brooklyn	COMMUNITY DISTRICT(S) 8	STREET ADDRESS 1010 Pacific Street
TAX BLOCK(S) AND LOT(S) Development site: Block 1133, Lots 32 and 42 Rezoning Area: Block 1133, Lots 32, 42, 43-49, and 51-53		ZIP CODE 11238
DESCRIPTION OF PROPERTY BY BOUNDING OR CROSS STREETS The rezoning area is a portion of the block bounded by Dean Street to the south, Grand Avenue to the west, Pacific Street to the north and Classon Avenue to the east.		
EXISTING ZONING DISTRICT, INCLUDING SPECIAL ZONING DISTRICT DESIGNATION, IF ANY M1-1		ZONING SECTIONAL MAP NUMBER 16c

6. *Required Actions or Approvals* (check all that apply)

***City Planning Commission*:** ☒ YES ☐ NO ☒ UNIFORM LAND USE REVIEW PROCEDURE (ULURP)

☐ CITY MAP AMENDMENT	☐ ZONING CERTIFICATION	☐ CONCESSION
☒ ZONING MAP AMENDMENT	☐ ZONING AUTHORIZATION	☐ UDAAP
☒ ZONING TEXT AMENDMENT	☐ ACQUISITION—REAL PROPERTY	☐ REVOCABLE CONSENT
☐ SITE SELECTION—PUBLIC FACILITY	☐ DISPOSITION—REAL PROPERTY	☐ FRANCHISE

☐ HOUSING PLAN & PROJECT ☐ OTHER, explain:
☐ SPECIAL PERMIT (if appropriate, specify type: ☐ modification; ☐ renewal; ☐ other); EXPIRATION DATE:
SPECIFY AFFECTED SECTIONS OF THE ZONING RESOLUTION

***Board of Standards and Appeals*:** ☐ YES ☒ NO
☐ VARIANCE (use)
☐ VARIANCE (bulk)
☐ SPECIAL PERMIT (if appropriate, specify type: ☐ modification; ☐ renewal; ☐ other); EXPIRATION DATE:
SPECIFY AFFECTED SECTIONS OF THE ZONING RESOLUTION

***Department of Environmental Protection*:** ☐ YES ☒ NO If "yes," specify:

Other City Approvals Subject to CEQR (check all that apply)
☐ LEGISLATION
☐ RULEMAKING
☐ CONSTRUCTION OF PUBLIC FACILITIES
☐ 384(b)(4) APPROVAL
☐ OTHER, explain:
☐ FUNDING OF CONSTRUCTION, specify:
☐ POLICY OR PLAN, specify:
☐ FUNDING OF PROGRAMS, specify:
☐ PERMITS, specify:

Other City Approvals Not Subject to CEQR (check all that apply)
☐ PERMITS FROM DOT'S OFFICE OF CONSTRUCTION MITIGATION AND COORDINATION (OCMC)
☐ LANDMARKS PRESERVATION COMMISSION APPROVAL
☐ OTHER, explain:

***State or Federal Actions/Approvals/Funding*:** ☐ YES ☒ NO If "yes," specify:

7. *Site Description:* *The directly affected area consists of the project site and the area subject to any change in regulatory controls. Except where otherwise indicated, provide the following information with regard to the directly affected area.*

***Graphics*:** *The following graphics must be attached and each box must be checked off before the EAS is complete. Each map must clearly depict the boundaries of the directly affected area or areas and indicate a 400-foot radius drawn from the outer boundaries of the project site. Maps may not exceed 11 x 17 inches in size and, for paper filings, must be folded to 8.5 x 11 inches.*

☒ SITE LOCATION MAP ☒ ZONING MAP ☒ SANBORN OR OTHER LAND USE MAP
☒ TAX MAP ☐ FOR LARGE AREAS OR MULTIPLE SITES, A GIS SHAPE FILE THAT DEFINES THE PROJECT SITE(S)
☒ PHOTOGRAPHS OF THE PROJECT SITE TAKEN WITHIN 6 MONTHS OF EAS SUBMISSION AND KEYED TO THE SITE LOCATION MAP

Physical Setting (both developed and undeveloped areas)
Total directly affected area (sq. ft.): 48,399
Waterbody area (sq. ft) and type: N/A
Roads, buildings, and other paved surfaces (sq. ft.): 48,399
Other, describe (sq. ft.): N/A

8. *Physical Dimensions and Scale of Project* (if the project affects multiple sites, provide the total development facilitated by the action)
SIZE OF PROJECT TO BE DEVELOPED (gross square feet): approx. 152,292
NUMBER OF BUILDINGS: 1
GROSS FLOOR AREA OF EACH BUILDING (sq. ft.): approx. 152,292
HEIGHT OF EACH BUILDING (ft.): 115 feet
NUMBER OF STORIES OF EACH BUILDING: 11

Does the proposed project involve changes in zoning on one or more sites? ☒ YES ☐ NO
If "yes," specify: The total square feet owned or controlled by the applicant: 25,869
The total square feet non-applicant owned area: N/A (Question 8 responses are based on the proposed develoment, not the Reasonable Worst Case Development Secnario for the Future With-Action Condition)

Does the proposed project involve in-ground excavation or subsurface disturbance, including, but not limited to foundation work, pilings, utility lines, or grading? ☒ YES ☐ NO
If "yes," indicate the estimated area and volume dimensions of subsurface permanent and temporary disturbance (if known):
AREA OF TEMPORARY DISTURBANCE: approx. 25,869 sq. ft. (width x length)
VOLUME OF DISTURBANCE: TBD cubic ft. (width x length x depth)
AREA OF PERMANENT DISTURBANCE: approx. 25,869 sq. ft. (width x length)

Description of Proposed Uses (please complete the following information as appropriate)

	Residential	***Commercial***	***Community Facility***	***Industrial/Manufacturing***
Size (in gross sq. ft.)	approx. 138,685	approx. 8,458	approx. 5,149	
Type (*e.g.,* retail, office, school)	128 units	Local retail	Arts Center	

Does the proposed project increase the population of residents and/or on-side workers? ☒ YES ☐ NO

If "yes," please specify: NUMBER OF ADDITIONAL RESIDENTS: 298 NUMBER OF ADDITIONAL WORKERS: 46

Provide a brief explanation of how these numbers were determined: Residents - Avg. household size in nearby Census Tracts; Workers - standard industry rates (1 residential employee per 25 dwelling units, 3 employees per 1,000 sf of retail use, 3 employees per 1,000 sf of community facility use)

Does the proposed project create new open space? ☐ YES ☒ NO If "yes," specify size of project-created open space: sq. ft.

Has a No-Action scenario been defined for this project that differs from the existing condition? ☐ YES ☒ NO

If "yes," see Chapter 2, "Establishing the Analysis Framework" and describe briefly:

9. *Analysis Year* CEQR Technical Manual Chapter 2

ANTICIPATED BUILD YEAR (date the project would be completed and operational): 2023

ANTICIPATED PERIOD OF CONSTRUCTION IN MONTHS: 16 to 20 (for each projected development site)

WOULD THE PROJECT BE IMPLEMENTED IN A SINGLE PHASE? ☒ YES ☐ NO | IF MULTIPLE PHASES, HOW MANY?

BRIEFLY DESCRIBE PHASES AND CONSTRUCTION SCHEDULE:

10. *Predominant Land Use in the Vicinity of the Project* (check all that apply)

☒ RESIDENTIAL ☒ MANUFACTURING ☒ COMMERCIAL ☐ PARK/FOREST/OPEN SPACE ☒ OTHER, specify: Transportation/utility

Part II: TECHNICAL ANALYSIS

INSTRUCTIONS: For each of the analysis categories listed in this section, assess the proposed project's impacts based on the thresholds and criteria presented in the CEQR Technical Manual. Check each box that applies.

- If the proposed project can be demonstrated not to meet or exceed the threshold, check the "no" box.
- If the proposed project will meet or exceed the threshold, or if this cannot be determined, check the "yes" box.
- For each "yes" response, provide additional analyses (and attach supporting information, if needed) based on guidance in the CEQR Technical Manual to determine whether the potential for significant impacts exists. Please note that a "yes" answer does not mean that an EIS must be prepared—it means that more information may be required for the lead agency to make a determination of significance.
- The lead agency, upon reviewing Part II, may require an applicant to provide additional information to support the Short EAS Form. For example, if a question is answered "no," an agency may request a short explanation for this response.

	YES	NO
1. *LAND USE, ZONING, AND PUBLIC POLICY*: CEQR Technical Manual Chapter 4		
(a) Would the proposed project result in a change in land use different from surrounding land uses?	☐	☒
(b) Would the proposed project result in a change in zoning different from surrounding zoning?	☒	☐
(c) Is there the potential to affect an applicable public policy?	☐	☒
(d) If "yes," to (a), (b), and/or (c), complete a preliminary assessment and attach.		
(e) Is the project a large, publicly sponsored project?	☐	☒
○ If "yes," complete a PlaNYC assessment and attach.		
(f) Is any part of the directly affected area within the City's Waterfront Revitalization Program boundaries?	☐	☒
○ If "yes," complete the Consistency Assessment Form.		
2. *SOCIOECONOMIC CONDITIONS*: CEQR Technical Manual Chapter 5		
(a) Would the proposed project:		
○ Generate a net increase of 200 or more residential units?	☒	☐
○ Generate a net increase of 200,000 or more square feet of commercial space?	☐	☒
○ Directly displace more than 500 residents?	☐	☒
○ Directly displace more than 100 employees?	☐	☒
○ Affect conditions in a specific industry?	☐	☒
3. *COMMUNITY FACILITIES*: CEQR Technical Manual Chapter 6		
(a) Direct Effects		
○ Would the project directly eliminate, displace, or alter public or publicly funded community facilities such as educational facilities, libraries, hospitals and other health care facilities, day care centers, police stations, or fire stations?	☐	☒
(b) Indirect Effects		
○ **Child Care Centers:** Would the project result in 20 or more eligible children under age 6, based on the number of low or low/moderate income residential units? (See Table 6-1 in Chapter 6)	☐	☒
○ **Libraries:** Would the project result in a 5 percent or more increase in the ratio of residential units to library branches? (See Table 6-1 in Chapter 6)	☐	☒
○ **Public Schools:** Would the project result in 50 or more elementary or middle school students, or 150 or more high school students based on number of residential units? (See Table 6-1 in Chapter 6)	☒	☐
○ **Health Care Facilities and Fire/Police Protection:** Would the project result in the introduction of a sizeable new neighborhood?	☐	☒
4. *OPEN SPACE*: CEQR Technical Manual Chapter 7		
(a) Would the proposed project change or eliminate existing open space?	☐	☒
(b) Is the project located within an under-served area in the Bronx, Brooklyn, Manhattan, Queens, or Staten Island?	☒	☐
○ If "yes," would the proposed project generate more than 50 additional residents or 125 additional employees?	☒	☐
(c) Is the project located within a well-served area in the Bronx, Brooklyn, Manhattan, Queens, or Staten Island?	☐	☒
○ If "yes," would the proposed project generate more than 350 additional residents or 750 additional employees?	☐	☐
(d) If the project in located an area that is neither under-served nor well-served, would it generate more than 200 additional	☐	☐

	YES	NO
residents or 500 additional employees?		
5. *SHADOWS*: CEQR Technical Manual Chapter 8		
(a) Would the proposed project result in a net height increase of any structure of 50 feet or more?	☒	☐
(b) Would the proposed project result in any increase in structure height and be located adjacent to or across the street from a sunlight-sensitive resource?	☐	☒
6. *HISTORIC AND CULTURAL RESOURCES*: CEQR Technical Manual Chapter 9		
(a) Does the proposed project site or an adjacent site contain any architectural and/or archaeological resource that is eligible for or has been designated (or is calendared for consideration) as a New York City Landmark, Interior Landmark or Scenic Landmark; that is listed or eligible for listing on the New York State or National Register of Historic Places; or that is within a designated or eligible New York City, New York State or National Register Historic District? (See the GIS System for Archaeology and National Register to confirm)	☐	☒
(b) Would the proposed project involve construction resulting in in-ground disturbance to an area not previously excavated?	☒	☐
(c) If "yes" to either of the above, list any identified architectural and/or archaeological resources and attach supporting information on whether the proposed project would potentially affect any architectural or archeological resources.		
7. *URBAN DESIGN AND VISUAL RESOURCES*: CEQR Technical Manual Chapter 10		
(a) Would the proposed project introduce a new building, a new building height, or result in any substantial physical alteration to the streetscape or public space in the vicinity of the proposed project that is not currently allowed by existing zoning?	☒	☐
(b) Would the proposed project result in obstruction of publicly accessible views to visual resources not currently allowed by existing zoning?	☐	☒
8. *NATURAL RESOURCES*: CEQR Technical Manual Chapter 11		
(a) Does the proposed project site or a site adjacent to the project contain natural resources as defined in Section 100 of Chapter 11?	☐	☒
○ If "yes," list the resources and attach supporting information on whether the proposed project would affect any of these resources.		
(b) Is any part of the directly affected area within the Jamaica Bay Watershed?	☐	☒
○ If "yes," complete the Jamaica Bay Watershed Form, and submit according to its instructions.		
9. *HAZARDOUS MATERIALS*: CEQR Technical Manual Chapter 12		
(a) Would the proposed project allow commercial or residential uses in an area that is currently, or was historically, a manufacturing area that involved hazardous materials?	☒	☐
(b) Does the proposed project site have existing institutional controls (*e.g.*, (E) designation or Restrictive Declaration) relating to hazardous materials that preclude the potential for significant adverse impacts?	☐	☒
(c) Would the project require soil disturbance in a manufacturing area or any development on or near a manufacturing area or existing/historic facilities listed in Appendix 1 (including nonconforming uses)?	☐	☒
(d) Would the project result in the development of a site where there is reason to suspect the presence of hazardous materials, contamination, illegal dumping or fill, or fill material of unknown origin?	☐	☒
(e) Would the project result in development on or near a site that has or had underground and/or aboveground storage tanks (*e.g.*, gas stations, oil storage facilities, heating oil storage)?	☐	☒
(f) Would the project result in renovation of interior existing space on a site with the potential for compromised air quality; vapor intrusion from either on-site or off-site sources; or the presence of asbestos, PCBs, mercury or lead-based paint?	☐	☒
(g) Would the project result in development on or near a site with potential hazardous materials issues such as government-listed voluntary cleanup/brownfield site, current or former power generation/transmission facilities, coal gasification or gas storage sites, railroad tracks or rights-of-way, or municipal incinerators?	☐	☒
(h) Has a Phase I Environmental Site Assessment been performed for the site?	☒	☐
○ If "yes," were Recognized Environmental Conditions (RECs) identified? Briefly identify: UST, historical industrial and gasoline use, presence of cellar boiler requiring fuel storage (see attached report for details)	☒	☐
10. *WATER AND SEWER INFRASTRUCTURE*: CEQR Technical Manual Chapter 13		
(a) Would the project result in water demand of more than one million gallons per day?	☐	☒
(b) If the proposed project located in a combined sewer area, would it result in at least 1,000 residential units or 250,000 square feet or more of commercial space in Manhattan, or at least 400 residential units or 150,000 square feet or more of commercial space in the Bronx, Brooklyn, Staten Island, or Queens?	☐	☒
(c) If the proposed project located in a separately sewered area, would it result in the same or greater development than the amounts listed in Table 13-1 in Chapter 13?	☐	☒
(d) Would the proposed project involve development on a site that is 5 acres or larger where the amount of impervious surface would increase?	☐	☒
(e) If the project is located within the Jamaica Bay Watershed or in certain specific drainage areas, including Bronx River, Coney	☐	☒

	YES	NO
Island Creek, Flushing Bay and Creek, Gowanus Canal, Hutchinson River, Newtown Creek, or Westchester Creek, would it involve development on a site that is 1 acre or larger where the amount of impervious surface would increase?		
(f) Would the proposed project be located in an area that is partially sewered or currently unsewered?	☐	☒
(g) Is the project proposing an industrial facility or activity that would contribute industrial discharges to a Wastewater Treatment Plant and/or generate contaminated stormwater in a separate storm sewer system?	☐	☒
(h) Would the project involve construction of a new stormwater outfall that requires federal and/or state permits?	☐	☒
11. *SOLID WASTE AND SANITATION SERVICES*: CEQR Technical Manual Chapter 14		
(a) Using Table 14-1 in Chapter 14, the project's projected operational solid waste generation is estimated to be (pounds per week): 15,448		
○ Would the proposed project have the potential to generate 100,000 pounds (50 tons) or more of solid waste per week?	☐	☒
(b) Would the proposed project involve a reduction in capacity at a solid waste management facility used for refuse or recyclables generated within the City?	☐	☒
12. *ENERGY*: CEQR Technical Manual Chapter 15		
(a) Using energy modeling or Table 15-1 in Chapter 15, the project's projected energy use is estimated to be (annual BTUs): 30,600,565,800 Million BTUs		
(b) Would the proposed project affect the transmission or generation of energy?	☐	☒
13. *TRANSPORTATION*: CEQR Technical Manual Chapter 16		
(a) Would the proposed project exceed any threshold identified in Table 16-1 in Chapter 16?	☒	☐
(b) If "yes," conduct the screening analyses, attach appropriate back up data as needed for each stage and answer the following questions:		
○ Would the proposed project result in 50 or more Passenger Car Equivalents (PCEs) per project peak hour?	☐	☒
If "yes," would the proposed project result in 50 or more vehicle trips per project peak hour at any given intersection? ***It should be noted that the lead agency may require further analysis of intersections of concern even when a project generates fewer than 50 vehicles in the peak hour. See Subsection 313 of Chapter 16 for more information.*	☐	☐
○ Would the proposed project result in more than 200 subway/rail or bus trips per project peak hour?	☐	☒
If "yes," would the proposed project result, per project peak hour, in 50 or more bus trips on a single line (in one direction) or 200 subway trips per station or line?	☐	☐
○ Would the proposed project result in more than 200 pedestrian trips per project peak hour?	☒	☐
If "yes," would the proposed project result in more than 200 pedestrian trips per project peak hour to any given pedestrian or transit element, crosswalk, subway stair, or bus stop?	☒	☐
14. *AIR QUALITY*: CEQR Technical Manual Chapter 17		
(a) *Mobile Sources*: Would the proposed project result in the conditions outlined in Section 210 in Chapter 17?	☐	☒
(b) *Stationary Sources*: Would the proposed project result in the conditions outlined in Section 220 in Chapter 17?	☒	☐
○ If "yes," would the proposed project exceed the thresholds in Figure 17-3, Stationary Source Screen Graph in Chapter 17? (Attach graph as needed)	☐	☒
(c) Does the proposed project involve multiple buildings on the project site?	☒	☐
(d) Does the proposed project require federal approvals, support, licensing, or permits subject to conformity requirements?	☐	☒
(e) Does the proposed project site have existing institutional controls (*e.g.*, (E) designation or Restrictive Declaration) relating to air quality that preclude the potential for significant adverse impacts?	☐	☒
15. *GREENHOUSE GAS EMISSIONS*: CEQR Technical Manual Chapter 18		
(a) Is the proposed project a city capital project or a power generation plant?	☐	☒
(b) Would the proposed project fundamentally change the City's solid waste management system?	☐	☒
(c) If "yes" to any of the above, would the project require a GHG emissions assessment based on the guidance in Chapter 18?	☐	☐
16. *NOISE*: CEQR Technical Manual Chapter 19		
(a) Would the proposed project generate or reroute vehicular traffic?	☒	☐
(b) Would the proposed project introduce new or additional receptors (see Section 124 in Chapter 19) near heavily trafficked roadways, within one horizontal mile of an existing or proposed flight path, or within 1,500 feet of an existing or proposed rail line with a direct line of site to that rail line?	☒	☐
(c) Would the proposed project cause a stationary noise source to operate within 1,500 feet of a receptor with a direct line of sight to that receptor or introduce receptors into an area with high ambient stationary noise?	☐	☒
(d) Does the proposed project site have existing institutional controls (*e.g.*, (E) designation or Restrictive Declaration) relating to noise that preclude the potential for significant adverse impacts?	☐	☒

	YES	NO
17. *PUBLIC HEALTH*: CEQR Technical Manual Chapter 20		
(a) Based upon the analyses conducted, do any of the following technical areas require a detailed analysis: Air Quality; Hazardous Materials; Noise?	☐	☒
(b) If "yes," explain why an assessment of public health is or is not warranted based on the guidance in Chapter 20, "Public Health." Attach a preliminary analysis, if necessary.		
18. *NEIGHBORHOOD CHARACTER*: CEQR Technical Manual Chapter 21		
(a) Based upon the analyses conducted, do any of the following technical areas require a detailed analysis: Land Use, Zoning, and Public Policy; Socioeconomic Conditions; Open Space; Historic and Cultural Resources; Urban Design and Visual Resources; Shadows; Transportation; Noise?	☐	☒
(b) If "yes," explain why an assessment of neighborhood character is or is not warranted based on the guidance in Chapter 21, "Neighborhood Character." Attach a preliminary analysis, if necessary. Although no detailed analysis was required in the neighborhood character assessment a brief description of neighborhood character is included in the Supplemental Studies to the EAS report.		
19. *CONSTRUCTION*: CEQR Technical Manual Chapter 22		
(a) Would the project's construction activities involve:		
○ Construction activities lasting longer than two years?	☐	☒
○ Construction activities within a Central Business District or along an arterial highway or major thoroughfare?	☐	☒
○ Closing, narrowing, or otherwise impeding traffic, transit, or pedestrian elements (roadways, parking spaces, bicycle routes, sidewalks, crosswalks, corners, *etc.*)?	☒	☐
○ Construction of multiple buildings where there is a potential for on-site receptors on buildings completed before the final build-out?	☐	☒
○ The operation of several pieces of diesel equipment in a single location at peak construction?	☐	☒
○ Closure of a community facility or disruption in its services?	☐	☒
○ Activities within 400 feet of a historic or cultural resource?	☐	☒
○ Disturbance of a site containing or adjacent to a site containing natural resources?	☐	☒
○ Construction on multiple development sites in the same geographic area, such that there is the potential for several construction timelines to overlap or last for more than two years overall?	☐	☒
(b) If any boxes are checked "yes," explain why a preliminary construction assessment is or is not warranted based on the guidance in Chapter 22, "Construction." It should be noted that the nature and extent of any commitment to use the Best Available Technology for construction equipment or Best Management Practices for construction activities should be considered when making this determination. See attached Supplemental Studies report.		

20. *APPLICANT'S CERTIFICATION*

I swear or affirm under oath and subject to the penalties for perjury that the information provided in this Environmental Assessment Statement (EAS) is true and accurate to the best of my knowledge and belief, based upon my personal knowledge and familiarity with the information described herein and after examination of the pertinent books and records and/or after inquiry of persons who have personal knowledge of such information or who have examined pertinent books and records.

Still under oath, I further swear or affirm that I make this statement in my capacity as the applicant or representative of the entity that seeks the permits, approvals, funding, or other governmental action(s) described in this EAS.

APPLICANT/REPRESENTATIVE NAME	DATE
Donald Ehrenbeck, AICP, P.P.	10/26/18

SIGNATURE

PLEASE NOTE THAT APPLICANTS MAY BE REQUIRED TO SUBSTANTIATE RESPONSES IN THIS FORM AT THE DISCRETION OF THE LEAD AGENCY SO THAT IT MAY SUPPORT ITS DETERMINATION OF SIGNIFICANCE.

Part III: DETERMINATION OF SIGNIFICANCE (To Be Completed by Lead Agency)

INSTRUCTIONS: In completing Part III, the lead agency should consult 6 NYCRR 617.7 and 43 RCNY § 6-06 (Executive Order 91 or 1977, as amended), which contain the State and City criteria for determining significance.

1. For each of the impact categories listed below, consider whether the project may have a significant adverse effect on the environment, taking into account its (a) location; (b) probability of occurring; (c) duration; (d) irreversibility; (e) geographic scope; and (f) magnitude.

IMPACT CATEGORY	Potentially Significant Adverse Impact YES	NO
Land Use, Zoning, and Public Policy	☐	☒
Socioeconomic Conditions	☐	☒
Community Facilities and Services	☐	☒
Open Space	☐	☒
Shadows	☐	☒
Historic and Cultural Resources	☐	☒
Urban Design/Visual Resources	☐	☒
Natural Resources	☐	☒
Hazardous Materials	☐	☒
Water and Sewer Infrastructure	☐	☒
Solid Waste and Sanitation Services	☐	☒
Energy	☐	☒
Transportation	☐	☒
Air Quality	☐	☒
Greenhouse Gas Emissions	☐	☒
Noise	☐	☒
Public Health	☐	☒
Neighborhood Character	☐	☒
Construction	☐	☒

2. Are there any aspects of the project relevant to the determination of whether the project may have a significant impact on the environment, such as combined or cumulative impacts, that were not fully covered by other responses and supporting materials? ☐ YES ☒ NO

If there are such impacts, attach an explanation stating whether, as a result of them, the project may have a significant impact on the environment.

3. Check determination to be issued by the lead agency:

☐ **Positive Declaration:** If the lead agency has determined that the project may have a significant impact on the environment, and if a Conditional Negative Declaration is not appropriate, then the lead agency issues a *Positive Declaration* and prepares a draft Scope of Work for the Environmental Impact Statement (EIS).

☐ **Conditional Negative Declaration:** A *Conditional Negative Declaration* (CND) may be appropriate if there is a private applicant for an Unlisted action AND when conditions imposed by the lead agency will modify the proposed project so that no significant adverse environmental impacts would result. The CND is prepared as a separate document and is subject to the requirements of 6 NYCRR Part 617.

☒ **Negative Declaration:** If the lead agency has determined that the project would not result in potentially significant adverse environmental impacts, then the lead agency issues a *Negative Declaration*. The *Negative Declaration* may be prepared as a separate document (see template) or using the embedded Negative Declaration on the next page.

4. ***LEAD AGENCY'S CERTIFICATION***

TITLE	LEAD AGENCY
Acting Director, Environmental Assessment and Review Division	Department of City Planning, acting on behalf of the City Planning Commission
NAME	DATE
Olga Abinader	10/26/2018

SIGNATURE

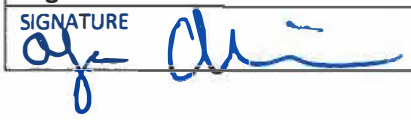

NEGATIVE DECLARATION (Use of this form is optional)

Statement of No Significant Effect

Pursuant to Executive Order 91 of 1977, as amended, and the Rules of Procedure for City Environmental Quality Review, found at Title 62, Chapter 5 of the Rules of the City of New York and 6 NYCRR, Part 617, State Environmental Quality Review, the Department of City Planning, acting on behalf of the City Planning Commission assumed the role of lead agency for the environmental review of the proposed project. Based on a review of information about the project contained in this environmental assessment statement and any attachments hereto, which are incorporated by reference herein, the lead agency has determined that the proposed project would not have a significant adverse impact on the environment.

Reasons Supporting this Determination

The above determination is based on information contained in this EAS, which finds that the proposed project:
and related actions sought before the City Planning Commission would have no significant effect on the quality of the environment. Reasons supporting this Determination are noted below.

Hazardous Materials, Air Quality, and Nosie:
1. An (E) designation (E-503) for hazardous materials, air quality, and noise has been incorporated into the proposed actions. Refer to "Determination of Significance Appendix: (E) Designation" for a list of sites affected by the (E) designation and applicable (E) designation requirements. The analyses conducted for hazardous materials, air quality, and nosie conclude that with the (E) Designation requirements in place, the proposed actions would not result in significant adverse impacts to hazardous materials, air quality, or nosie.

Transportation:
2. The EAS includes a detailed transportation analysis of pedestrian trips generated by the proposed actions. The proposed actions do not result in an increase of more than 200 pedestrians at any intersection corner, sidewalk, or crosswalk. The analysis concludes that the proposed actions would not result in any significant adverse impacts to traffic flow, transit operations, pedestrin ovement, or vehicular and pedestrian safety.

Land Use, Zoning and Public Policy
3. The EAS includes a detailed Land Use, Zoning and Public Policy section. The analysis concludes that the proposed rezoning from M1-1 to R7D/C1-4, which would facilitate the development of a new mixed use residential, commercial, and community facility building, would have no significant adverse impacts related to land use, zoning, or public policy. The proposed actions would facilitate an increase in residential density in an area characterized by diverse uses including residential, commercial, community facility, and industrial uses. The existing M1-1 zoning district contains multiple nonconforming residential buildings and is adjacent to R7A, R6A, and R6B disctricts and therefore would not generate new land uses that would be incompatible with existing land uses within and adjacent to the study area. The analysis concludes that no significant adverse impacts related to Land Use, Zoning and Public Policy would result from the proposed actions.

No other significant effects upon the environment that would require the preparation of a Draft Environmental Impact Statement are foreseeable. This Negative Declaration has been prepared in accordance with Article 8 of the New York State Environmental Conservation Law (SEQRA).

TITLE	LEAD AGENCY
Acting Director, Environmental Assessment and Review Division	Department of City Planning, acting on behalf of the City Planning Commission
NAME: Olga Abinader	DATE: 10/26/2018
SIGNATURE: Olga Abinader	

TITLE	
Chair, Department of City Planning	
NAME: Marisa Lago	DATE: 10/29/2018
SIGNATURE	

AECOM Environment

Prepared for:
1010 Pacific Street LLC
65 Vestry Street
New York, NY 10013

Prepared by:
AECOM
125 Broad Street
New York, NY 10004

1010 Pacific Street Rezoning

Supplemental Studies to the Environmental Assessment Statement

October 2018

Proposed Development Site:
1010 Pacific Street (Block 1133, Lots 32 and 42)
Brooklyn, NY

Prepared for:
1010 Pacific Street LLC
65 Vestry Street
New York, NY 10013

Prepared by:
AECOM
125 Broad Street
New York, NY 10004

TABLE OF CONTENTS

1.0 PROJECT DESCRIPTION 1
1.1 Project Location 1
1.2 Required Approvals and Proposed Actions 10
1.3 Purpose and Need For Propsed Actions 11
1.4 Description of the Proposed Development 12
1.5 Reasonable Worst Case Development Scenario 13
1.6 Required Approvals 21
2.0 ENVIRONMENTAL REVIEW 23
2.1 LAND USE, ZONING AND PUBLIC POLICY 23
2.1.1 Land Use 23
2.1.2 Zoning 26
2.1.3 Public Policy 30
2.2 SOCIOECONOMICS 32
2.3 COMMUNITY FACILITIES AND SERVICES 36
2.3.1 Public Schools 37
2.4 OPEN SPACE 41
2.4.1 Preliminary Open Space Assessment 42
2.5 SHADOWS 48
2.5.1 Preliminary Shadow Screening Assessment 49
2.6 HISTORIC AND CULTURAL RESOURCES 50
2.6.1 Architectural Resources 50
2.6.2 Archaeological Resources 52
2.7 URBAN DESIGN AND VISUAL RESOURCES 52
2.7.1 Preliminary Analysis 52
2.8 HAZARDOUS MATERIALS 63
2.8.1 Summary of Phase I ESA 63
2.8.2 Summary of Phase II ESI 64
2.8.3 Conclusions 65
2.8.4 (E) Designations 66
2.9 TRANSPORTATION 67
2.9.1 Introduction 67
2.9.2 Transportation Screening 67
2.9.3 Pedestrian Analysis 71
2.9.4 Safety Assessment 82
2.9.5 Parking 82
2.9.6 Conclusions 82
2.10 AIR QUALITY 83
2.10.1 Mobile Sources 83

2.10.2 Stationary Sources 84
2.11 NOISE 97
2.11.1 Mobile Sources 99
2.11.2 Stationary Sources 102
2.12 NEIGHBORHOOD CHARACTER 103
2.12.1 Existing Conditions 104
2.12.2 Future No-Action Condition 106
2.12.3 Future With-Action Condition 106
2.13 CONSTRUCTION 108
2.13.1 Effect of Construction on Traffic 109
2.13.2 Effect of Construction on Air Quality 109
2.13.3 Effect of Construction on Noise 110

List of Figures

Figure 1-1 Project Site Location 2
Figure 1-2 Tax Map 3
Figure 1-3 Photo Key Map 4
Figure 1-4 Photographs of the Site and Surrounding Area 5
Figure 2.1-1 Land Use Map 24
Figure 2.1-2 Zoning Map 28
Figure 2.2-1 Socioeconomic Study Area 35
Figure 2.3-1 Public Schools in the Vicinity of the Proposed Rezoning Area 38
Figure 2.4-1 Open Space Study Area 43
Figure 2.4-2 Open Space Resources 45
Figure 2.5-1 Tier 1 Shadow Study 51
Figure 2.7-1 Urban Design Study Area 54
Figure 2.7-2 Urban Design, Future No-Action Scenario: Midblock on Pacific Street, Eastern View 55
Figure 2.7-3 Urban Design, Future No-Action Scenario: Midblock on Pacific Street, Western View 56
Figure 2.7-4 Urban Design, Future No-Action Scenario: Pacific Street at Classon Avenue, Southern View 57
Figure 2.7-5 Urban Design, Future With-Action Scenario: Midblock on Pacific Street, Eastern View 59
Figure 2.7-6 Urban Design, Future With-Action Scenario: Midblock on Pacific Street, Western View 60
Figure 2.7-7 Urban Design, Future With-Action Scenario: Pacific Street at Classon Avenue, Southern View 61
Figure 2.10-1 HVAC Screening Analysis, Cumulative Impact from all Projected and Potential Sites 86
Figure 2.10-2 1010 Pacific Street Rezoning Project Sites 88
Figure 2.11-1 Recommended Widow-Wall Attenuation 102

List of Tables

Table 1.2-1 Comparison and Existing and Proposed Zoning 10
Table 1.5-1 Description of Existing and Proposed Conditions 17
Table 1.5-2 Proposed Zoning Area Site Data 20
Table 2.1-1 Summary of Zoning Regulations 27
Table 2.1-1 Census Tracts and Population in the Study Area 36
Table 2.3-1 Public Elementary Schools within CSD 17, Subdistrict 1: Enrollment, Capacity and Utilization 39
Table 2.3-3 Public School Students Generated by the Proposed Rezoning 40
Table 2.3-5 Projected Public Intermediate School Enrollment, Capacity and Utilization in 2023 with the Proposed Action 40
Table 2.4-1 Census Tracts and Population in the Study Area 42
Table 2.4-2 Open Space Resources in the Study Area 44
Table 2.9-1 Estimated Person-Trip Generation and Transportation Planning Assumptions 69

Table 2.9-2 Estimated Vehicle-Trip Generation and Mode Splits 69
Table 2.9-3 Estimated Trip Generation for Subway, Bus and Walk Modes 70
Table 2.9-4 LOS Criteria for Crosswalks and Street Corners 72
Table 2.9-5 LOS Criteria for Sidewalks under Platoon Flow Conditions 72
Table 2.9-6 Year 2016 Existing Conditions Pedestrian Crosswalk Analyses 74
Table 2.9-7 Year 2016 Existing Conditions Pedestrian Corner Analyses 74
Table 2.9-8 Year 2016 Existing Conditions Pedestrian Sidewalk Analyses 75
Table 2.9-9 Year 2023 No-Action Conditions Pedestrian Crosswalk Analyses 76
Table 2.9-10 Year 2023 No-Action Conditions Pedestrian Corner Analyses 76
Table 2.9-11 Year 2023 No-Action Conditions Pedestrian Sidewalk Analyses 77
Table 2.9-12 Year 2023 With-Action Conditions Pedestrian Crosswalk Analyses 80
Table 2.9-13 Year 2023 With-Action Conditions Pedestrian Corner Analyses 80
Table 2.9-14 Year 2023 With-Action Conditions Pedestrian Sidewalk Analyses 81
Table 2.9-15 Summary of NYCDOT Crash Data for 2014 to 2016 82
Table 2.10-1 Reasonable Worst-Case Development Scenario (RWCDS) 85
Table 2.10-2 HVAC Emission Rates and Stack Parameters for the Proposed Buildings 90
Table 2.10-3 Background Concentration and Criteria 91
Table 2.10-4 Maximum Modeled Concentration (µg/m^3) on Existing Site 91
Table 2.10-5 Maximum Modeled Concentration (µg/m^3) on Projected Site 1 92
Table 2.10-6 Maximum Modeled Concentration (µg/m^3) on Projected Site 2 92
Table 2.10-7 Maximum Modeled Concentration (µg/m3) on Projected Site 3 93
Table 2.10-8 Maximum Modeled Concentration (µg/m^3) on Projected Site 4 93
Table 2.10-9 Maximum Modeled Concentration (µg/m^3) on Potential Site 1 94
Table 2.10-10 Industrial and Manufacturing Uses within the 400-Foot Study Area 96
Table 2.10-11 DEP CATS Database Search Results 97
Table 2.11-1 Sound Pressure Level & Loudness of Typical Noises in Indoor & Outdoor Environments . 98
Table 2.11-2 Location 1: Measured Noise Levels (dB(A)) 100
Table 2.11-3 Location 2: Measured Noise Levels (dB(A)) 100
Table 2.11-4 Attenuation Values to Achieve Acceptable Interior Noise Levels 101

APPENDICES

Appendix A Site Plans and Zoning Analyses from the Project Architect
Appendix B Agency Correspondence
Appendix C Transportation Study Figures
Appendix D Hazardous Materials Studies
Appendix E Revised CEQR EAS Short Form and Negative Declaration
Appendix F Technical Memorandum- Revised CEQR EAS with Revised Zoning Map Amendment by the City Planning Commission

1.0 PROJECT DESCRIPTION

The Applicant, 1010 Pacific Street LLC, seeks a zoning map amendment to rezone portions of Brooklyn Block 1133 from an M1-1 District to an R7D/C2-4 District, to facilitate the construction of an 11-story (plus cellar) mixed residential, commercial and community facility building with approximately 128 dwelling units at 1010 Pacific Street (Block 1133, Lots 32 and 42). The proposed development is anticipated to be completed by 2020. The Applicant is also proposing a zoning text amendment to establish the rezoning area as a Mandatory Inclusionary Housing ("MIH") area mapped with MIH Options 1 and 2. The proposed development would include approximately 138,685 gross square feet (gsf) (133,408 zoning square feet [zsf]) of residential floor area (5.16 FAR), approximately 7,056 gsf (7,056 zsf) of commercial floor area (0.27 FAR), and approximately 4,378 gsf (4,378 zsf) of community facility floor area (0.17 FAR). Given the combined lot size of approximately 25,896 square feet (sf), the approximately 152,292 gsf (144,842 zsf) proposed building would have a combined FAR of 5.60, which is permitted in an R7D/C1-4 district.

In addition to the Applicant-controlled lots, the rezoning boundary would include Block 1133, Lots 43, 44, 45, 46, 47, 48, 49, 51, 52, and 53.

This EAS studies the potential for individual and cumulative environmental impacts related to the proposed action occurring in a study area of approximately 400 feet around the rezoning area. This study area is generally bound by Bergen Street to the south, the midpoint between Classon and Franklin Avenues to the east, Grand Avenue to the west, and Atlantic Avenue to the north.

1.1 PROJECT LOCATION

The rezoning area is located within the Prospect Heights neighborhood of Brooklyn, as shown in **Figures 1-1** and **1-2,** and consists of the northeastern portion of Block 1133 (Lots 32, 42, 43, 44, 45, 46, 47, 48, 49, 51, 52 and 53). The proposed development site is located at 1010 Pacific Street and consists of two contiguous tax lots which the Applicant would merge to create a single zoning lot with an area of approximately 25,869 square feet The proposed development site is presently improved with a two-story, approximately 23,180 square-foot warehouse (Lot 32) and accessory parking lot (Lot 42). The project site has a flat topography and is paved.

The rezoning area (also referred to as the affected area) is generally bound by Pacific Street to the north, Classon Avenue to the east, Dean Street to the south, and the midblock point between, Pacific Street and Dean Street to the west.

As indicated in Figure 2.1-2, the project site is located within an existing M1-1 zoning district. The M1-1 district permits a maximum Floor Area Ratio (FAR) of 1.0 for light industrial uses (Use Group 17) and general service (Use Group 16), including woodworking shops, repair shops, and whole service and storage facilities, retail and commercials uses (UG 4 through 14) and specific community facility uses (UG 4).

A key to the photographs of the projected development site and surrounding project study area are shown in **Figure 1-3**, with photographs of the site and surrounding study area displayed in **Figure 1-4**. The project site and rezoning area (Affected Area) is located within Brooklyn Community District (CD) 8.

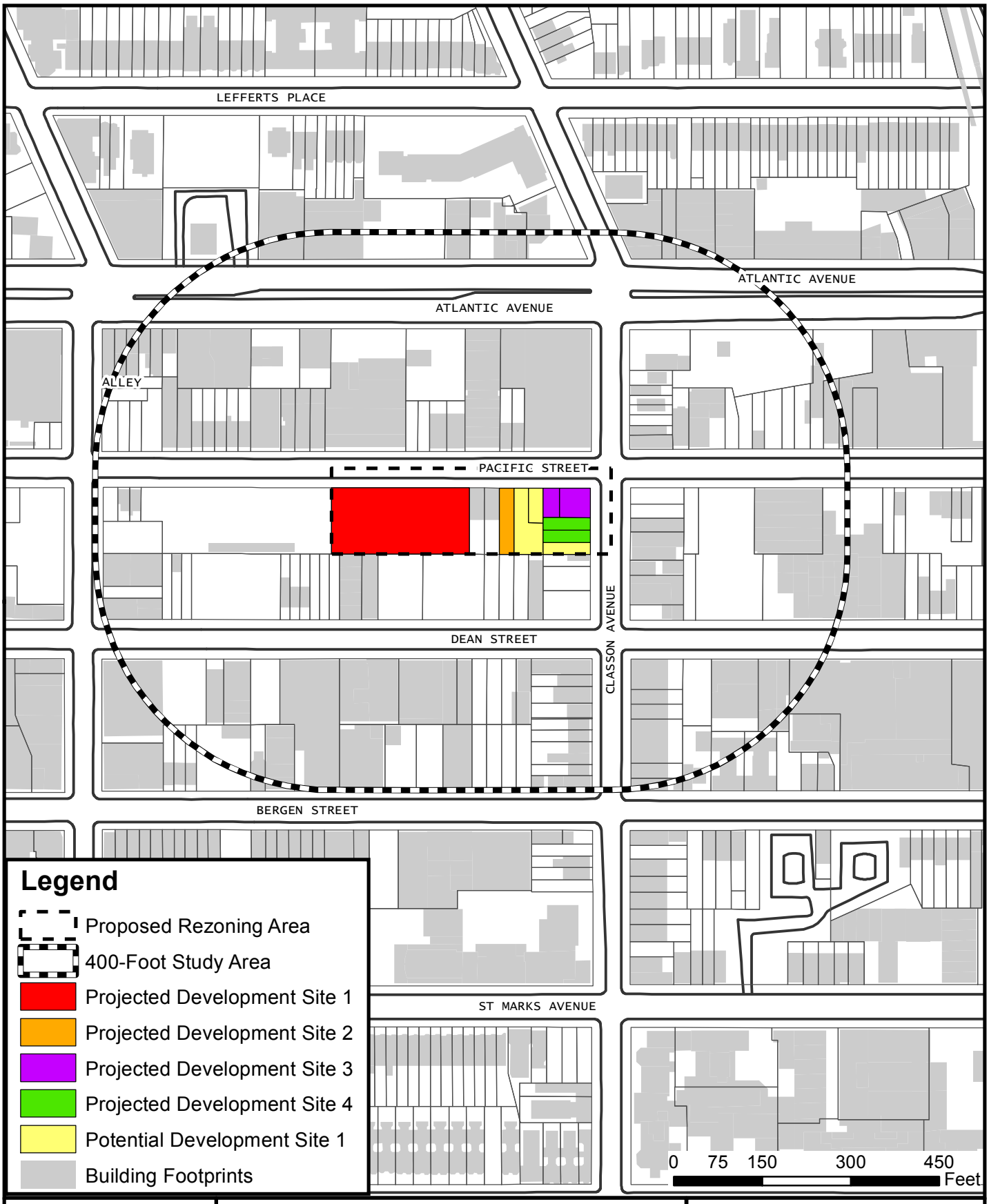

AECOM

Environmental Assessment Statement
1010 Pacific Street Rezoning
Prospect Heights, Brooklyn, NY

Project Site Location

Figure 1-1



Environmental Assessment Statement
1010 Pacific Street Rezoning
Prospect Heights, Brooklyn, NY

Tax Map

Figure 1-2

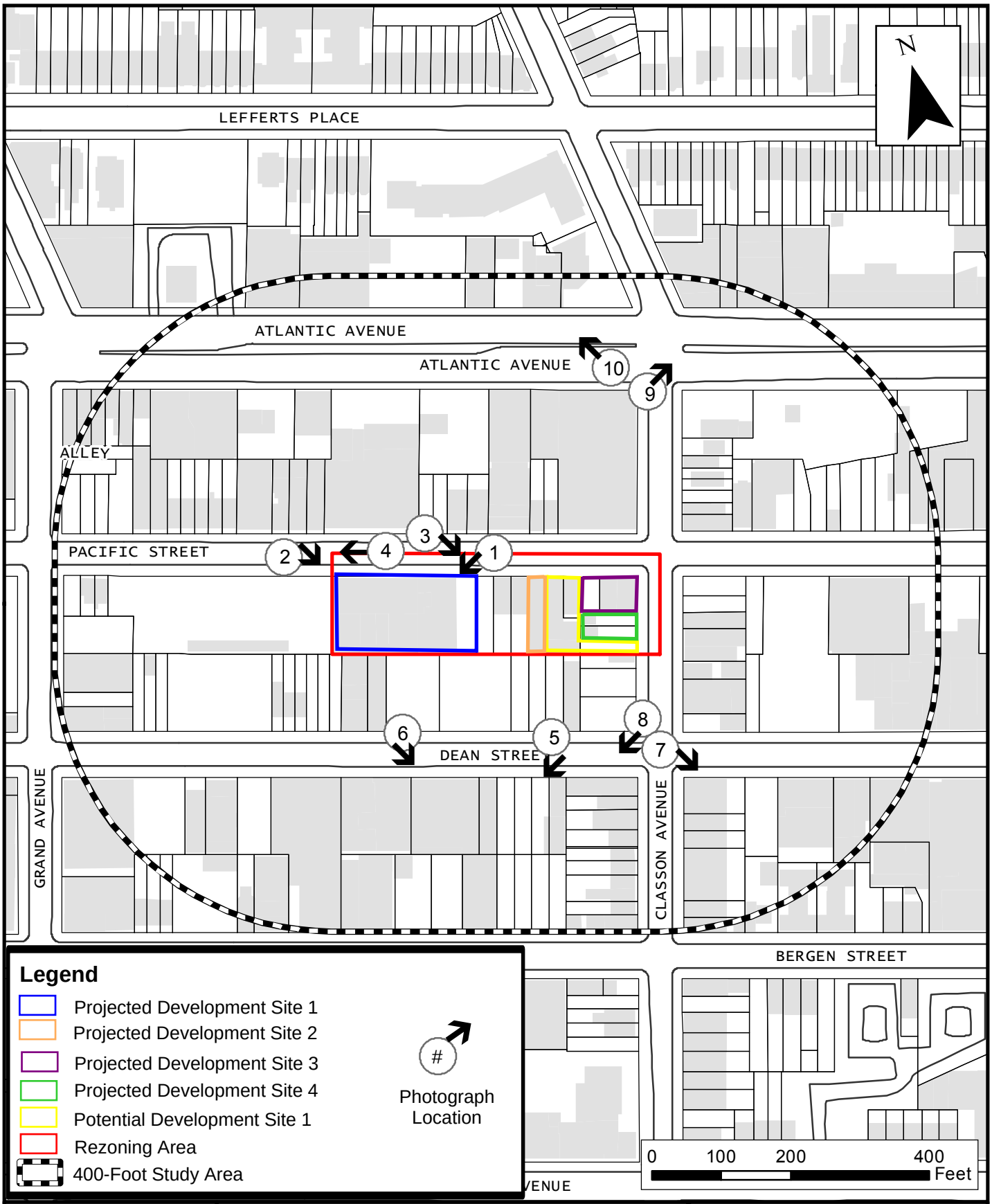

AECOM

Environmental Assessment Statement
1010 Pacific Street Rezoning
Prospect Heights, Brooklyn, NY

Projected Development Site Photographs

Figure 1-3

Figure 1-4 Photographs of the Site and Surrounding Area

Photograph 1



View of Project Site on 1010 Pacific Street, looking southwest

Photograph 2



View of Project Site on 1010 Pacific Street, looking southeast

Photograph 3



View of lots within the project rezoning area on Pacific Street, looking southeast

Photograph 4



View of vacant lot adjacent to Project Site on Pacific Street, looking southwest. Residential buildings across the street can be seen on the far right of the photograph.

Photograph 5



View of community facility on Dean Street, looking southwest.

Photograph 6



View of industrial buildings on Dean Street, looking southeast.

Photograph 7



View of mixed-used residential and commercial buildings on the intersection between Dean Street and Classon Avenue, looking southeast.

Photograph 8



View of mixed-used residential and commercial buildings on the intersection between Dean Street and Classon Avenue, looking southwest.

Photograph 9



View of transportation/utility facilities on Classon Avenue, looking northeast to Atlantic Avenue.

Photograph 10



View of new construction for a commercial-use building on Atlantic Avenue, looking northwest.

Land uses in vicinity of the rezoning area include a mix of industrial and manufacturing uses, transportation and utility uses, commercial uses, residential uses, parking uses, and a number of vacant lots with some lots consisting of mixed residential and commercial uses and public facility uses as well. The residential uses are north and northwest if the project site and to the south as well on Bergen Street. Parking uses are generally located to the south of the project site on Dean Street. Industrial and Manufacturing uses are located all throughout the study area, as are transportation and utility uses, and vacant lots. There is a commercial uses due south and adjacent to the project site on Dean Street and north of the project site on Atlantic Avenue, in the northern portion of the study area. There are no designated historic landmarks or designated historic districts in the study area.

The area surrounding the project site is served by several public transit options. The Franklin Avenue station of New York City Transit's "A" and "C" lines and the Franklin Avenue-Fulton Street station of the Franklin Avenue Shuttle (the "S" line) are located approximately one-quarter of a mile northeast of the project site.

1.2 REQUIRED APPROVALS AND PROPOSED ACTIONS

The proposed zoning map amendment is a discretionary public action, which is subject to the City Environmental Quality Review (CEQR) as an Unlisted Action. Through CEQR, agencies review discretionary actions for the purpose of identifying the effects those actions may have on the environment. The proposed zoning map and text amendments are also discretionary public actions, which are subject to public comment under the Uniform Land Use Review Procedure (ULURP). The ULURP process was established to assure adequate opportunity for public review of proposed actions. ULURP dictates that every project be presented at four levels: the Community Board; the Borough President; the City Planning Commission; and, in some cases the City Council. The procedures mandate time limits for each stage to ensure a maximum review period of seven months.

The Applicant is proposing a zoning map amendment to rezone a portion of Brooklyn Block 1133, Lots 32, and 42 (the project site) as well as Lots 43, 44, 45, 46, 47, 48, 49, 51, 52, and 53 from an M1-1 District to an R7D/C2-4 District. **Table 1.2-1** below compares the existing and proposed zoning.

Table 1.2-1 Comparison and Existing and Proposed Zoning

Zoning District	Type and Use Group (UG)	Floor Area Ratio (FAR)	Parking (Required Spaces)
M1-1	Light Manufacturing UGs 4-14, 16, 17	1.0 FAR – Manufacturing 1.0 FAR – Commercial 2.4 FAR – Community Facility	Varies by Use
R7D	Residential UGs 1-4	4.2 FAR – Residential (QH) 5.6 FAR – Residential (Inclusionary housing) 4.2 FAR – Community Facility FAR	50 percent of dwelling units (waived if 5 or fewer spaces required)
C2-4	Commercial Overlay UGs 1-9 & 14	FAR 1.0 – Commercial (within R1 - R5) FAR 2.0 – Commercial (within R6 - R10)	Generally Not Required

The Applicant is also proposing a zoning text amendment to map an Inclusionary Housing designated area over the rezoning area. The Applicant has selected MIH Option 1 to allocate 25 percent of the dwelling units in the proposed development as permanently affordable units at or below 60 percent of the Area Median Income ("AMI") with ten percent at or below 40 percent AMI.

A zoning text amendment to Section Appendix F of the *Zoning Resolution of the City of New York* is required to designate the project site as an MIH Area. The proposed zoning text amendment to Appendix F would designate the project site as an MIH Area subject to the affordability requirements of Option 1 of the MIH Program. If the designation of the project site is approved pursuant to this ULURP application, the permanent affordable housing would be required on the project site in accordance with the requirements of Option 1 of the MIH Program.

1.3 PURPOSE AND NEED FOR PROPSED ACTIONS

The proposed actions are intended to facilitate a new 11-story mixed residential, commercial and community facility building with approximately 54 dwelling units, 7,056 zsf of commercial floor area, and 4,378 zsf of community facility floor area at 1010 Pacific Street. The purpose and need for the zoning map amendment and zoning text amendment are discussed below.

Zoning Map Amendment

The rezoning area is currently within an M1-1 zoning district that does not permit residential development as-of-right. The proposed R7D/C2-4 zoning district would allow medium-density apartment buildings at a maximum FAR of 5.6 for developments that provide affordable housing pursuant to the MIH program requirements. The maximum building height for eligible MIH program buildings with qualifying ground floors is 115 feet or 11 stories. Buildings must set back above a maximum base height of 95 feet to a depth of 10 feet on a wide street and 15 feet on a narrow street before rising up to the maximum building height. Off-street parking is required for 50 percent of the residential dwelling units, but is not required for affordable housing units within the Transit Zone.

The proposed C2-4 commercial district would be mapped to a depth of 100 feet from Pacific Street. The proposed C2-4 commercial overlay mapped with the R7D district requires active ground floor uses. The proposed C2-4 district permits Use Groups 5 through 9 and 14 allowing commercial development with up to 2.0 FAR. However, Use Group 5 uses would not be permitted within the rezoning area because of its distance from a limited access highway. The proposed C2-4 overlay district requires one accessory parking space per 1,000 square feet of commercial floor area for general retail or service uses. Mapping an R7D/C2-4 in this area provides opportunities for medium-density housing development under the MIH program with required active commercial and community facility uses on the ground floor.

The proposed rezoning would provide new opportunities for affordable and market-rate housing and commercial development in an underutilized area. The increase in density to the proposed R7D/C2-4 district would facilitate the development of greatly needed housing, including affordable housing in Community District 8. At this density, the Applicant would be able to construct a mixed residential, commercial, and community facility building with approximately 154 units, of which approximately 39 would be permanently affordable at low-income levels under MIH Option 1. The proposed R7D/C2-4 zoning district would promote the development of underused sites, address the City's growing need for additional housing and help reknit the urban fabric in the area. There is existing residential development within the proposed rezoning area and residential development is a common land use in the surrounding

area. The existing M1-1 zoning district is surrounded by residential development in an area well-served by transit.

The proposed zoning map amendment would promote the development of new medium-density housing, which would provide for the productive and more intensive reuse of underutilized industrial property, address the City's growing need for additional housing and better integrate the site with the Prospect Heights neighborhood. The proposed development's affordable housing component would address the City's *Housing New York: A Five-Borough, Ten-Year Plan* goals by increasing affordable housing to help ensure the community remains economically diverse in the face of increasing pressure for market-rate development. The proposed R7D zoning district is an appropriate density due rezoning area's accessibility to public transit. The proposed zoning overlay supports the development of new ground floor commercial uses to serve the neighborhood, provide jobs, and enliven the Pacific Street streetscape. The proposed action fully complies and conforms with the proposed zoning districts and there are no additional actions needed pursuant to any other City, State, or Federal agency.

Zoning Text Amendment

The proposed text amendment to ZR Appendix F would require that development in the rezoning area to be in accordance with the MIH program. Pursuant to the MIH program, a percentage of the new dwelling units in the proposed development would be required to be permanently affordable units. The Applicant has selected Option 1 for the proposed development site, which results in an affordable housing set aside for 25 percent of the residential floor area (32 permanently-affordable units) at an average of 60 percent of AMI with ten percent at 40 percent AMI.

The added FAR allocation in an R7D district with an Inclusionary Housing bonus is 5.6, whereas the FAR is 4.2 without it. This FAR bonus facilitates the Applicant's proposal and development plans.

1.4 DESCRIPTION OF THE PROPOSED DEVELOPMENT

The Applicant proposed to redevelop the site with a new 11-story (plus cellar) residential, commercial, and community facility building with approximately 152,292 gsf (144,842 zsf) of floor area with an FAR of 5.59. The ground floor would be a qualifying ground floor with a height of 14'-0". The height of the proposed building is 115 feet with a base height of 95 feet and a 15-foot setback at the tenth floor. The proposed building would have 65 percent lot coverage with a 30-foot rear yard. The building would provide 49 off street parking spaces accessory to the residential use in the cellar and on a surface lot in the rear yard. There would be one new curb cut on Pacific Street to access the required parking.

The proposed building would contain approximately 138,685 gsf (133,408 zsf) of residential floor area with 154 dwelling units developed pursuant to Quality Housing regulations. The Applicant has selected MIH Option 1 for the proposed development resulting in approximately 39 permanently affordable units at or below 60 percent of the AMI with ten percent at or below 40 percent AMI.

The ground floor of the proposed building would comprise approximately 7,056 sf of commercial floor area and approximately 4,378 sf of community facility floor area. A portion of the existing warehouse building at the development site would be preserved for the community facility, which is intended for use as a non-profit arts center to provide arts-based programming for the community and a garden in the rear yard of the building. The existing warehouse building is incorporated into the design of the proposed building to create visual interest and a connection to the historic use of the development site. The Applicant would seek a local non-profit to operate the community facility.

Considering the time required for the environmental review and land use approval process, and assuming a construction period of approximately 16 to 20 months, the build year for the Applicant's proposed development is 2020. However as the proposed actions are expected to induce development on four projected development sites that are not controlled by the Applicant, an analysis year of 2023 will be utilized for the environmental analyses. This build year provides additional time that may be needed to realize the development potential proposed for the two other projected development sites.

1.5 REASONABLE WORST CASE DEVELOPMENT SCENARIO

Future No-Action Scenario

The proposed rezoning area is located in the Prospect Heights neighborhood of Brooklyn, which is densely developed. No significant new construction was observed within 400 feet of the proposed rezoning area, although several vacant lots are present.

There are no other discretionary actions being sought related to the proposed action. The proposed development site has a lot area of 25,869 sf, with a current built FAR of 1.0. In the future without the proposed action, it is assumed that the existing two-story 23,180 square-foot warehouse (Lot 32) and accessory parking lot (Lot 42) would operate under their present conditions. Therefore, if the mapping of the requested R7D/C2-4 district and inclusionary housing designated status is not granted, the existing conditions would continue in the No-Action Scenario.

For the non-Applicant controlled parcels in the rezoning area, it is also assumed that existing conditions would remain unchanged in the Future No-Action Scenario. The existing conditions for these lots are described below.

- Block 1133, Lot 43 is an approximately 2,750-sf lot improved with a three-story, 1.09 FAR residential building with six dwelling units.
- Block 1133, Lot 44 is an approximately 2,750-sf lot improved with a three-story 1.09 FAR residential building with six dwelling units.
- Block 1133, Lot 45 is an approximately 2,750-sf lot improved with a one-story 1.0 FAR industrial/manufacturing building.
- Block 1133, Lot 46 is an approximately 4,050-sf lot improved with a two-story 1.59 FAR industrial/manufacturing building.
- Block 1133, Lot 47 is an approximately 1,450-sf lot improved with a three-story 1.15 FAR residential building with four dwelling units.
- Block 1133, Lot 48 is an approximately 1,320-sf lot improved with a one-story 1.0 FAR commercial building.
- Block 1133, Lot 49 is an approximately 2,570-sf lot improved with a one-story 1.0 FAR commercial building.
- Block 1133, Lot 51 is an approximately 1,630-sf lot improved with a one-story 0.25 FAR transportation/utility building.
- Block 1133, Lot 52 is an approximately 1,630-sf lot improved with a two-story 0.49 FAR transportation/utility building.

- Block 1133, Lot 53 is an approximately 1,630-sf lot improved with a two-story 1.94 FAR industrial/manufacturing building.

Future With-Action Scenario

The Future With-Action condition under a Reasonable Worst Case Scenario requires identification of the type, location, and extent of development anticipated as a result of the proposed action along with any potential impacts that may arise from that future development. In accordance with *CEQR Technical Manual* guidance, this analysis requires that the With-Action Condition be considered a scenario that maximizes the permitted FAR allowed under the proposed rezoning. Under the With-Action scenario, the proposed rezoning would amend the zoning map to change the existing M1-1 district to an R7D district with a C2-4 commercial overlay, which would facilitate the Applicant's proposed development (Block 1133, Lots 32 and 42) of an 11-story mixed residential and community facility building with approximately 128 dwelling units, 25 percent of which would be classified as affordable. However for the purposes of a conservative analysis, the Future With-Action Scenario includes the Applicant's proposed development site (Projected Development Site 1) under a maximized FAR scenario, as well as those sites within the proposed rezoning area that are projected to be developed as a result of the new bulk and use allowances under the proposed rezoning, and as induced by the Applicant's proposed development.

To determine those sites that are likely to be induced to develop under the proposed rezoning, the remaining projected development sites within the proposed rezoning area were divided into two categories - projected development sites and potential development sites. Projected development sites are considered more likely to be developed within the analysis period because of their size (they are either large lots or contiguous small lots in common ownership that together comprise a large site). Potential development sites are less likely to be developed within the analysis period because they are not entirely under common ownership, have an irregular shape or have some combination of these features.

Based on these criteria, Block 1133, Lot 45; Lots 48 and 49; and Lots 51 and 52 have been identified as projected development sites. Block 1133, Lots 46, 47 and 53 have been identified as a potential development site. To present a conservative assessment, the With-Action scenario assumes that these sites would be constructed to the maximum floor area allowed under MIH regulations for an R7D zoning district, and assumes that 30 percent of projected dwelling units would be at or below 80 percent AMI percent affordable housing option.

No development is expected to occur on Block 1133, Lots 43 and 44 for reasons discussed below:

<u>Block 1133, Lot 43</u>

This parcel at 2,750 square feet is substantially less than the 5,000 square-foot criteria for a soft site that is discussed in the *CEQR Technical Manual*. Generally, lots with a small lot size are not considered likely to be redeveloped even if currently built to substantially less than the maximum allowable FAR. A small lot is often defined for this purpose as 5,000 square feet or less, but the lot size criteria is dependent on neighborhood specific trends, and common development sizes in the study area should be examined prior to establishing this criteria. During a site visit to the proposed rezoning area, no recent developments were observed in the immediate vicinity. In addition, the existing building on the site has six residential units and was built in 1930. As discussed in the *CEQR Technical Manual*, residential buildings with six or more units constructed before 1974 "are likely to be rent-stabilized and difficult to legally

demolish due to tenant re-location requirements." As the lot size is significantly smaller than 5,000 square feet, no development trends are prevalent in the surrounding area, and the existing residential building has six units and was built before 1974, it is assumed that new development would not occur on this parcel by the build year.

Block 1133, Lot 44

This parcel at 2,750 square feet is substantially less than the 5,000 square-foot criteria for a soft site that is discussed in the *CEQR Technical Manual*. Generally, lots with a small lot size are not considered likely to be redeveloped even if currently built to substantially less than the maximum allowable FAR. A small lot is often defined for this purpose as 5,000 square feet or less, but the lot size criteria is dependent on neighborhood specific trends, and common development sizes in the study area should be examined prior to establishing this criteria. During a site visit to the proposed rezoning area, no recent developments were observed in the immediate vicinity (400 feet). In addition, the exiting building on the site has six residential units and was built in 1931. As the lot size is significantly smaller than 5,000 square feet, no development trends are prevalent in the surrounding area, and the existing residential building has six units and was built before 1974, it is assumed that new development would not occur on this parcel by the build year.

Proposed Development Site

Projected Development Site 1: Block 1133 Lots 32 and 42

In an R7D district, an FAR of 4.2 is permitted as of right and an overall building height of 100 feet is allowed to accommodate the permitted FAR.

The Reasonable Worst Case Development Scenario (RWCDS) assumes the Applicant would build in conformance with the new Mandatory Inclusionary Housing (MIH) standards that are part of the *Housing New York* plan. The MIH standards would result in more affordable housing that is responsive to the needs of each neighborhood, with a set of income mix options that is achieved through zoning. Under this proposal, the Applicant may choose to allocate either 25 percent of the total floor area to residents with incomes averaging 60 percent of the AMI or 30 percent of the total floor area to residents with incomes averaging 80 percent of AMI. In an R7D district, a total FAR of 5.6 is allowed in Inclusionary Housing designated areas, with an increase in building height to 115 feet under MIH.

Under the With-Action Scenario, it is assumed that Block 1133, Lot 32 and 42 would be developed to the maximum FAR of 5.6. Additionally, the mapping of a C2-4 commercial overlay over the rezoning area is assumed to induce a ground-floor commercial use over Projected Development Site 1. On a 25,869 square-foot site, it is assumed that the proposed action would result in approximately 159,352 gross square feet (gsf) (144,865 zsf) of total floor area of which 130,896 gsf (118,996 zsf) would be residential floor area (4.6 FAR) and 28,456 (25,896 zsf) of commercial floor area (1.0 FAR). It is also assumed that the building would be constructed to the maximum allowable height, which is 115 feet in an R7D district. Estimating approximately 850 square feet per dwelling unit, it is assumed that 154 residential units would be constructed on-site. Under the 30 percent MIH option, the proposed rezoning would result in the creation of approximately 46 affordable units with incomes averaging 80 percent of the AMI. Off-street parking would be required for 50 percent of market-rate dwelling units; therefore Projected Development Site 1 would provide approximately 54 parking spaces for the 108 market-rate units.

Projected Development Sites

Projected Development Site 2: Block 1133 Lot 45

Under the With-Action Scenario, it is assumed that Block 1133, Lot 45 would be developed to the maximum FAR of 5.6, pursuant to MIH. Additionally, the mapping of a C2-4 commercial overlay over the rezoning area is assumed to induce a ground-floor commercial use over the projected development site. On a 2,750 square-foot lot, it is assumed that the proposed action would result in approximately 13,915 gross square feet (gsf) (12,650 zsf) of residential floor area (4.6 FAR) and 2,750 square feet of commercial floor area (1.0 FAR). It is also assumed that the building would be constructed to the maximum allowable height of115 feet. Estimating approximately 850 square feet per dwelling unit, it is assumed 16 residential units would be constructed on-site. Under the 30 percent MIH option, the proposed rezoning would result in the creation of approximately five affordable units with incomes averaging 80 percent of the AMI. Required parking for the 11 market-rate units would be waived as it is fewer than 15 spaces.

Projected Development Site 3: Block 1133 Lot 48 and 49

Under the With-Action Scenario, it is assumed that Block 1133, Lots 48 and 49 would be developed to the maximum FAR of 5.6, pursuant to MIH, as both sites are under common ownership. Additionally, the mapping of a C2-4 commercial overlay over the rezoning area is assumed to induce a ground-floor commercial use over the projected development site. On a 3,890 square-foot combined lot, it is assumed that the proposed action would result in approximately 19,683 gsf (17,894 zsf) (4.6 FAR) of residential floor area and 4,279 gsf (3,890 zsf) (1.0 FAR) of commercial floor area. It is also assumed that the building would be constructed to the maximum allowable height of 115 feet. Estimating approximately 850 square feet per dwelling unit, it is assumed 23 residential units would be constructed on-site. Under the 30 percent MIH option, the proposed rezoning would result in the creation of approximately seven affordable units with incomes averaging 60 percent of the AMI. Required parking for the 16 market-rate units would be waived as it is fewer than 15 spaces.

Projected Development Site 4: Block 1133 Lot 51 and 52

Under the With-Action Scenario, it is assumed that Block 1133, Lots 51 and 52 would be developed to the maximum FAR of 5.6, pursuant to MIH, as both sites are under common ownership. Additionally, the mapping of a C2-4 commercial overlay over the rezoning area is assumed to induce a ground-floor commercial use over the projected development site. On a 3,260 square-foot combined lot, it is assumed that the proposed action would result in approximately16,496 gsf (14,996 zsf) (4.6 FAR) of residential floor area and 3,586 gsf (3,260 zsf) (1.0 FAR) of commercial floor area. It is also assumed that the building would be constructed to the maximum allowable height of 115 feet. Estimating approximately 850 square feet per dwelling unit, it is assumed 19 residential units would be constructed on-site. Under the 30 percent MIH option, the proposed rezoning would result in the creation of approximately six affordable units with incomes averaging 60 percent of the AMI. Required parking for the market-rate units would be waived as it is fewer than 15 spaces.

As shown below in **Tables 1.5-1** and **1.5-2**, the RWCDS for the Future With-Action Scenario would result in the addition of a total of 180,990 gsf (164,536 zsf) of residential floor area; approximately 213 dwelling units, including approximately 64 affordable units (under the 30% MIH option); and 39,346 gsf of commercial space. Relative to the Future No-Action Scenario, the proposed rezoning is expected to add a net increment of 180,990 gsf of residential development (213 units); a net increment of 35,456 gsf of

Table 1.5-1 Description of Existing and Proposed Conditions

Description of Existing and Proposed Conditions **Part II - RWCDS Analysis Framework Table**

	EXISTING CONDITION	NO-ACTION CONDITION	WITH-ACTION CONDITION	INCREMENT
Land Use				
Residential	☐ Yes ☑ No	☐ Yes ☑ No	☑ Yes ☐ No	
If "yes," specify the following:				
Describe type of residential structures	N/A	N/A	Multi-family (Lots 32, 42, 45, 48, 49, 51, 52)	
No. of dwelling units	N/A	N/A	213	213
No. of low- to moderate-income units	N/A	N/A	64	64
Gross floor area (sq. ft.)	N/A	N/A	180,990	180,990
Commercial	☑ Yes ☐ No	☑ Yes ☐ No	☑ Yes ☐ No	
If "yes," specify the following:				
Describe type (retail, office, other)	Other (Auto body supplies) (Lots 48, 49)	Other (Auto body supplies) (Lots 48, 49)	Local Retail (Lots 32, 42, 45, 48, 49, 51, 52)	
Gross floor area (sq. ft.)	3,890	3,890	39,346	35,456
Manufacturing/Industrial	Yes (Lots 32, 45)	Yes (Lots 32, 45)	No	
If "yes," specify the following:				
Type of Use	warehouses	warehouses		
Gross floor area (sq. ft.)	25,930	25,930		-25,930
Open storage area (sq. ft.)				
If any enclosed activities, specify:				
Community Facility	☐ Yes ☑ No	☐ Yes ☑ No	☐ Yes ☑ No	
If "yes," specify the following:				
Type of Use	N/A	N/A	N/A	
Gross floor area (sq. ft.)	N/A	N/A	N/A	
Vacant Land	☐ Yes ☑ No	☐ Yes ☑ No	☐ Yes ☑ No	
If "yes", describe:	N/A	N/A	N/A	
Publicly Accessible Open Space	☐ Yes ☑ No	☐ Yes ☑ No	☐ Yes ☑ No	
If "yes," specify type (mapped City, State, or Federal Parkland, wetland-mapped or otherwise known, other):	N/A	N/A	N/A	
Other Land Uses	☑ Yes ☐ No	☑ Yes ☐ No	☐ Yes ☑ No	
If "yes," describe:	Transportation/ Utility (Lots 51, 52) 1,200 gsf	Transportation/ Utility (Lots 51, 52) 1,200 gsf	N/A	-1,200
Parking				
Garages	☐ Yes ☑ No	☐ Yes ☑ No	☑ Yes ☐ No	
If "yes," specify the following:				
No. of public spaces	N/A	N/A		
No. of accessory spaces	N/A	N/A	(Lots 32, 42) Approx. 54	54
Operating hours	N/A	N/A		
Attended or non-attended	N/A	N/A		
Lots	☑ Yes ☐ No	☑ Yes ☐ No	☐ Yes ☐ No	

Table 1.5-1 Description of Existing and Proposed Conditions

Description of Existing and Proposed Conditions **Part II - RWCDS Analysis Framework Table**

	EXISTING CONDITION	NO-ACTION CONDITION	WITH-ACTION CONDITION	INCREMENT
If "yes," specify the following:				
No. of public spaces	0	0		
No. of accessory spaces	(Lot 42) Approx. 10	(Lot 42) Approx. 10		-10
Operating hours				
Other (includes street parking)	☐ Yes ☑ No	☐ Yes ☑ No	☐ Yes ☑ No	
If "yes," describe:	N/A	N/A	N/A	
Population				
Residents	☐ Yes ☑ No	☐ Yes ☑ No	☑ Yes ☐ No	
If "yes," specify number:	N/A	N/A	496	496
Briefly explain how the number of residents was calculated:	Estimate uses census data (average household size of 2.33)			
Businesses	☑ Yes ☐ No	☑ Yes ☐ No	☑ Yes ☐ No	
If "yes," specify the following:				
No. and type	1 Auto body supplies (Lots 48, 49); 2 industrial/ manufacturing (Lots 32, 45); 1 transp/ utility (Lots 51, 52)	(Lots 48, 49) 1 - Auto body supplies	(Lots 32, 42, 45, 48, 49, 51, 52) No. TBD (minimum of 4) - Local retail	Approximately 3 (Local retail); -1 (auto body supplies)
No. and type of workers by business	Approx. 42 total: 12 Auto body, 26 ind/man, 4 transp/util	Approx. 42 total: 12 Auto body, 26 ind/man, 4 transp/util	Approx. 127 total: 188 for local reatil; 9 for residentail use	85
No. and type of non-residents who are not workers	N/A	N/A	N/A	
Briefly explain how the number of businesses was calculated:	Estimate uses standard industry rate assumptions (3 workers per 1,000 sf of retail and transportation/utilty use; 1 worker per 1,000 sf of industrial use; 1 worker per 25 dwelling units)			
Other (students, visitors, concert-goers, *etc*.)	☐ Yes ☑ No	☐ Yes ☑ No	☐ Yes ☑ No	
If any, specify type and number:	N/A	N/A	N/A	
Briefly explain how the number was calculated:				
Zoning				
Zoning classification	M1-1	M1-1	R7D/C2-4	
Maximum amount of floor area that can be developed	1.0 FAR - manufacturing, commercial 2.4 FAR - community facility	1.0 FAR - manufacturing, commercial 2.4 FAR - community facility	5.6 FAR - residential 4.2 FAR - community facility 2.0 FAR - commercial	

Table 1.5-1 Description of Existing and Proposed Conditions

Description of Existing and Proposed Conditions — Part II - RWCDS Analysis Framework Table

	EXISTING CONDITION	NO-ACTION CONDITION	WITH-ACTION CONDITION	INCREMENT
Predominant land use and zoning classifications within land use study area(s) or a 400 ft. radius of proposed project	industrial/ manufacturing, residential; M1-1, R6A, R7A	industrial/ manufacturing, residential; M1-1, R6A, R7A	mixed residential/ commercial, industrial/ manufacturing, residential, commercial; R7D/C2-4, M1-1, R6A, R7A	
Attach any additional information that may be needed to describe the project. If your project involves changes that affect one or more sites not associated with a specific development, it is generally appropriate to include total development projections in the above table and attach separate tables outlining the reasonable development scenarios for each site.				

Table 1.5-2 Proposed Zoning Area Site Data

Block	Lot	Lot Area	Existing Zoning	Existing Land Use	Existing Floor Area GSF	Existing FAR	Allowable FAR (Existing)	Proposed Zoning	Maximum Allowable Height (feet)	R7D/C2-4: Projected Total ZSF Allowable 5.6 FAR	R7D/C2-4: Projected Total GSF Allowable 5.6 FAR	Projected Com. ZSF	Projected Com. GSF	Projected Res. ZSF	Projected Res. GSF	Projected Dwelling Units	Projected Affordable Dwelling Units (30% MIH Option)	Incremental Change in Floor Area: Future No-Action vs. Future With-Action Condition GSF
1133	**32**	**23,119**	**M1-1**	**Industrial/ manufacturing**	**23,180**	**1.00**	**1.00**	**R7D/C2-4**	**115**	**144,865**	**1159,352**	**25,869**	**28,456**	**118,996**	**130,896**	**154**	**46**	**-23,180 Industrial/manufacturing +28,456 Commercial +130,896 Residential**
1133	**42**	**2,750**	**M1-1**	**Parking**	**0**	**0**	**1.00**	**R7D/C2-4**										
1133	43	2,750	M1-1	Residential	3,000	1.09	1.00	R7D/C2-4	--	--		--		--		--	--	--
1133	44	2,750	M1-1	Residential	3,000	1.09	1.00	R7D/C2-4	--	--		--		--		--	--	--
1133	**45**	**2,750**	**M1-1**	**Industrial/ manufacturing**	**2,750**	**1.00**	**1.00**	**R7D/C2-4**	**115**	**15,400**	**16,940**	**2,750**	**3,025**	**12,650**	**13,915**	**16**	**5**	**-2,750 Industrial/manufacturing +3,025 Commercial +13,915 Residential**
1133	**46**	**2,750**	**M1-1**	**Industrial/ manufacturing**	**4,381**	**1.59**	**1.00**	**R7D/C2-4**	**--**	**--**		**--**		**--**		**--**	**--**	**--**
1133	**47**	**2,750**	**M1-1**	**Residential**	**3,150**	**1.15**	**1.00**	**R7D/C2-4**										
1133	**53**	**1,630**	**M1-1**	**Industrial/ manufacturing**	**3,160**	**1.94**	**1.00**	**R7D/C2-4**										
1133	**48**	**1,320**	**M1-1**	**Commercial**	**1,320**	**1.00**	**1.00**	**R7D/C2-4**	**115**	**21,784**	**23,962**	**3,890**	**4,279**	**17,894**	**19,683**	**23**	**7**	**+389 Commercial +19,683 Residential**
1133	**49**	**2,570**	**M1-1**	**Commercial**	**2,570**	**1.00**	**1.00**	**R7D/C2-4**										
1133	**51**	**1,630**	**M1-1**	**Transportation/ utility**	**400**	**0.25**	**1.00**	**R7D/C2-4**	**115**	**18,256**	**20,082**	**3,260**	**3,586**	**14,996**	**16,496**	**19**	**6**	**-1,200 Transportation/utility +3,586 Commercial +16,496 Residential**
1133	**52**	**1,630**	**M1-1**	**Transportation/ utility**	**800**	**0.49**	**1.00**	**R7D/C2-4**										
Shaded Rows are Projected Development Sites								***TOTAL***	***--***	***200,305***	***220,336***	***35,769***	***39,346***	***164,536***	***180,990***	***213***	***64***	**-1,200 Transportation/utility *-25,930 Industrial/manufacturing* *+35,456 Commercial* *+180,990 Residential***

Sources: MapPLUTO GIS data, 17V1; Design plans for Applicant's proposed development.

commercial space; a net decrease of 25,930 gsf of industrial/manufacturing floor area; and a net decrease of 1,200 gsf of transportation/utility floor area.

Potential Development Sites

Potential Development Site 1: Block 1133, Lot 46, 47 and 53

Under the With-Action Scenario, Block 1133, Lots 46, 47 and 53 have the potential to be developed, though the three parcels are not under common ownership and therefore less likely to be developed than the projected development sites described above. It is assumed that Block 1133, Lots 46, 47 and 53 would be developed to the maximum FAR of 5.6, pursuant to MIH. Additionally, the mapping of a C2-4 commercial overlay over the rezoning area has the potential to induce a ground-floor commercial use over the potential development site. On a 7,130 sf combined lot, the proposed action may result in approximately 36,078 gsf (32,798 zsf) (4.6 FAR) of residential floor area and 7,843 gsf (7,130 zsf) (1.0 FAR) of commercial floor area. It is also assumed that the building would be constructed to the maximum allowable height of 115 feet for an R7D district. Estimating approximately 850 square feet per dwelling unit, it is assumed that 42 residential units may be constructed on-site. Under the 30 percent MIH option, the proposed rezoning would result in the creation of approximately 13 affordable units with incomes averaging 60 percent of the AMI. Approximately 15 parking spaces would be required for the market-rate units.

In addition, The potential effects of the nearby 1050 Pacific Street Rezoning (a private application requesting a zoning map amendment to create a Mixed Use district in order to facilitate a new eight-story development with 103 dwelling units and 15,790 sf of commercial area) were considered in all density related sections of this EAS.

1.6 REQUIRED APPROVALS

The Applicant requires zoning map and text amendments, as well as public financing approval, to implement the proposed development. The proposed zoning map and text amendments are discretionary public actions that are subject to both the Uniform Land Use Review Procedure (ULURP) and CEQR; the requested public funding is a discretionary public action that is subject to CEQR.

The City's ULURP process, mandated by Sections 197-c and 197-d of the New York City Charter, is designed to allow public review of ULURP applications at four levels: Community Board Borough President, the New York City Planning Commission (CPC), and the City Council. The procedure has mandated time limits for review at each stage to ensure a maximum review period of approximately seven months. The process begins with certification by the Department of City Planning (DCP) that the ULURP application is complete. The application is then referred to the relevant Community Board (in this case Brooklyn Community Board 8). The Community Board has up to 60 days to review and discuss the proposal, hold a public hearing, and adopt an advisory resolution on the ULURP application. The Borough President then has up to 30 days to review the application. CPC then has up to 60 days, during which time a public hearing is help on the ULURP application. If CPC approved, the application is then forwarded to the City Council, which has 50 days to review the ULURP application.

CEQR is a process by which agencies review discretionary actions for the purpose of identifying the effects those actions may have on the environment. The City of New York established CEQR regulations in accordance with the New York State Environmental Quality Review Act (SEQRA). In addition, the City

has published a guidance manual for environmental review, the *CEQR Technical Manual*. CEQR rules guide environmental review through the following steps:

- *Establish a Lead Agency*. Under CEQR, the "lead agency" is the public entity conducting environmental review. The environmental review for the proposed action is a coordinated review, with DCP serving as the lead agency for this project, and HPD as an involved agency under CEQR.

- *Environmental Review and Determination of Significance*. The lead agency will determine whether the proposed actions may have a significant impact on the environmental. To do so, an EAS must be prepared. This EAS will be reviewed by the lead agency, which will determine if the proposed actions and development would result in any significant adverse impacts on the environment.

2.0 ENVIRONMENTAL REVIEW

The following technical sections are provided as supplemental assessments to the Environmental Assessment Statement ("EAS") Short Form. Part II: Technical Analyses of the EAS forms a series of technical thresholds for each analysis area in the respective chapter of the *CEQR Technical Manual*. If the proposed action was demonstrated not to meet or exceed the threshold, the 'NO' box in that section was checked; thus additional analyses were not needed. If the proposed action was expected to meet or exceed the threshold, or if this was not able to be determined, the 'YES' box was checked on the EAS Short Form, resulting in a preliminary analysis to determine whether further analyses were needed. For those technical sections, the relevant chapter of the *CEQR Technical Manual* was consulted for guidance on providing additional analyses (and supporting information, if needed) to determine whether detailed analysis was needed.

A 'YES' answer was provided in the following technical analyses areas on the EAS Short Form:

- Community Facilities and Services
- Open Space
- Shadows
- Historic and Cultural Resources
- Urban Design and Visual Resources
- Hazardous Materials
- Transportation
- Air Quality
- Noise
- Construction

In addition, although the proposed action did not require a 'YES' answer on the EAS Short Form, a preliminary Land Use, Zoning and Public Policy, and Neighborhood Character assessments are included to provide additional background information for the proposed action. In the following technical sections, where a preliminary or more detailed assessment was necessary, the discussion is generally divided into Existing Conditions, the Future No-Action Conditions (the Future Without the Proposed Action), and the Future With-Action Conditions (the Future With the Proposed Action).

2.1 LAND USE, ZONING AND PUBLIC POLICY

The *CEQR Technical Manual* recommends procedures for analysis of land use, zoning and public policy to ascertain the impacts of a project on the surrounding area. Land use, zoning and public policy are described in detail below.

2.1.1 Land Use

Existing Conditions

Existing land use patterns of city blocks within approximately 400 feet of the rezoning area are presented in **Figure 2.1-1**. The *CEQR Technical Manual* suggests that a land use, zoning and public policy study area should extend 400 feet from the site of the proposed action. This study area is generally bound by Bergen Street to the south, the midpoint between Classon and Franklin Avenues to the east, Grand Avenue to the west, and Atlantic Avenue to the north. The rezoning area is located in the Prospect Heights neighborhood of Brooklyn.

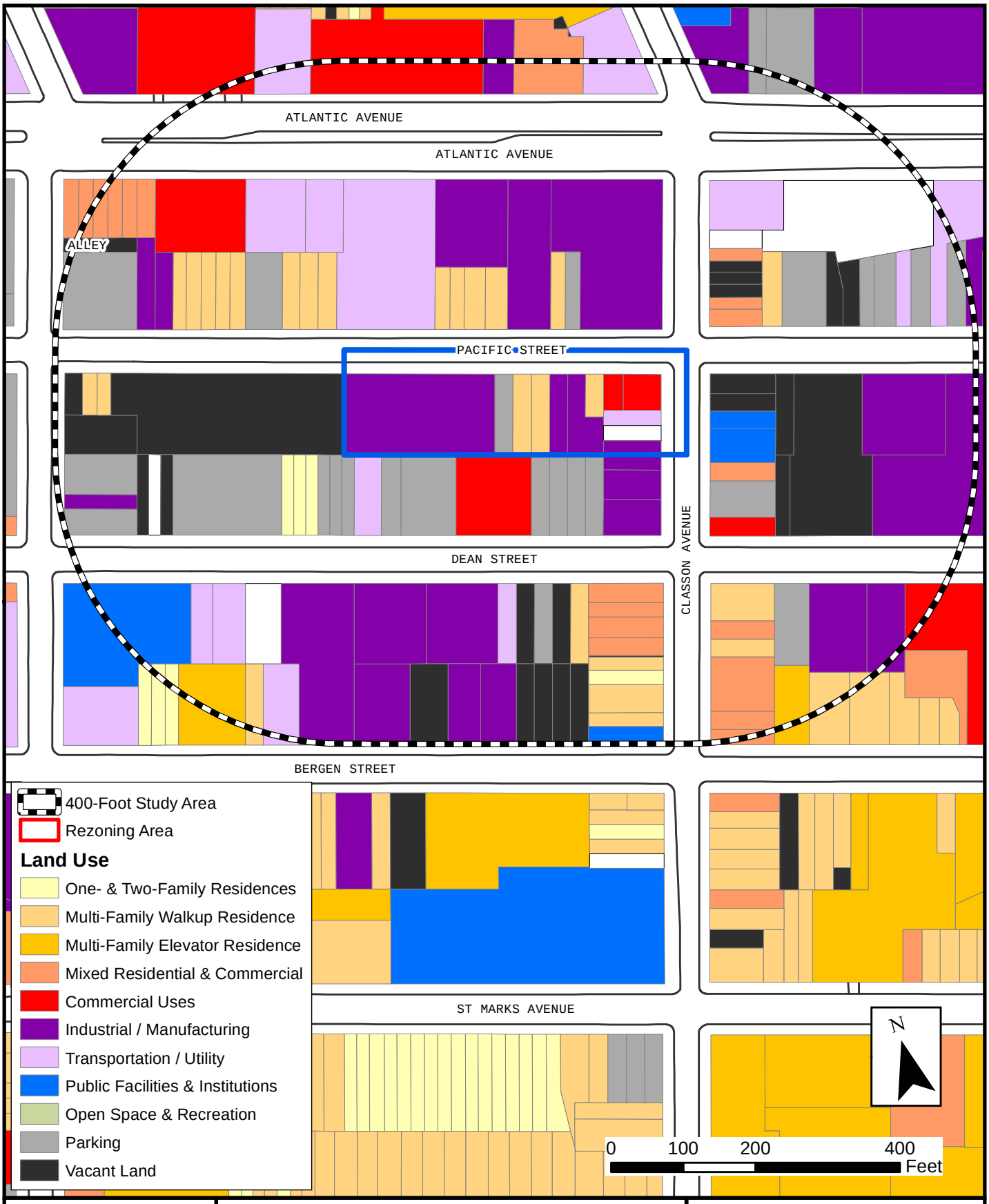

AECOM

Environmental Assessment Statement
1010 Pacific Street Rezoning
Prospect Heights, Brooklyn, NY

Land Use Map

Figure 2.1-1

A field survey was conducted to determine the existing land use patterns and neighborhood characteristics of the study area. The existing land uses in the area immediately surrounding the proposed rezoning area are a mix of warehouse/distribution, commercial, community facility, and non-conforming residential uses. The commercial uses comprise restaurant supplies, auto-oriented commercial and some local retail. The prevailing built form of the area is a mix of low to mid-rise non-residential buildings and three-to four-story residential buildings. A majority of the subject Block 1133 is vacant.

The rezoning area is located on Pacific Street, between Grand and Classon Avenues. The rezoning area and 400-foot study area generally consists of industrial and commercial buildings, as well as vacant lots and parking areas. Projected Development Site 1 is presently improved with a two-story, approximately 23,180 square-foot warehouse (Lot 32) and accessory parking lot (Lot 42), while Projected Development Site 2 contains a one-story 2,750 gsf industrial/manufacturing building. Projected Development Site 3 is occupied by a single-story, 1,320-gsf commercial building (Lot 48) and a one-story, 2,570-gsf commercial building (Lot 49). Two, two-story transportation/utility buildings are located on Projected Development Site 4; one is 400-gsf in size (Lot 51) and the other is 800-gsf (Lot 52). Potential Development Site 1 contains a two-story, 4,381-gsf industrial/manufacturing building (Lot 46), a three-story, 3,150-gsf residential building with four dwelling units (Lot 47), and a two-story, 3,160-gsf industrial/manufacturing building (Lot 53).

Two multi-family residential buildings are located on the south side of Pacific Street, between Projected Development Sites 1 and 2. Each residential building is three stories and includes six units. Directly south of Projected Development Sites 1 and 2, there are several parking lots, improved by a commercial-use building. Directly to the west of Projected Development Site 1 is a large vacant lot, which occupies much of Block 1133. Directly to the north of the rezoning area, across Pacific Street, is a warehouse facility with several one- and two-family residential buildings to its east and west. The northern portion of the study area is within Block 1125, which is occupied mostly by multi-family residential buildings, as well as a number of industrial buildings.

The southern portion of the study area is within Block 1141, which is occupied mostly by industrial, and low-rise multi-family residential buildings, as well as a few vacant lots. There is a community facility building with an accessory parking lot on the southeast corner of the intersection between Grand Avenue and Dean Street, and an additional community facility located on the northwest corner of the intersection between Classon Avenue and Bergen Street.

Despite the study area being located in an M1-1 the district has long had a strong residential presence that appears to be strengthening over the last decade.

Future No-Action Condition

The rezoning area is located in the Prospect Heights neighborhood of Brooklyn, which is densely developed. No significant new construction was observed and no known developments have been identified within 400 feet of the rezoning area, although several vacant lots are present. Therefore in the future without the proposed action, it is assumed that the existing uses within the rezoning area would remain unchanged. On Projected Development Site 1, the 23,180 square-foot warehouse (Lot 32) and accessory parking lot (Lot 42) would operate under their present conditions. Similarly, under the Future No-Action Scenario, it is assumed that the existing one-story industrial/ manufacturing building on Projected Development Site 2 would remain; the two existing one-story commercial buildings on Projected Development Site 3 would remain; and the existing one- and two-story transportation/utility buildings on Projected Development Site 4 would remain.

With respect to the 400-foot study area, the Future No-Action Condition assumes that existing land use patterns generally would continue, with one potential exception. One rezoning proposal is currently under review and could result in the redevelopment of several parcels located across Classon Avenue from the rezoning area. The 1050 Pacific Street Rezoning project proposes to rezone the western portion of Block 1134 (Lots 2, 4, 5, 7-9, 11, 12, 96, 97, and p/o 17) from M1-1 to an MX: R7A/M1-4; and to expand the Inclusionary Housing Designated Area to include the proposed rezoning area as a Mandatory Inclusionary Housing Area. The proposed 1050 Pacific Street Rezoning would facilitate the development of an eight-story mixed-use building with approximately 104 dwelling units and ground-floor commercial space, and could result in the redevelopment of additional underutilized sites within the proposed rezoning area by the project's 2023 analysis year. As the rezoning proposal has not been approved, it is not considered as a No-Action project.

Future With-Action Condition

Under the With-Action Scenario, the proposed rezoning would amend the zoning map to change the existing M1-1 district to an R7D district with a C2-4 commercial overlay. On Projected Development Site 1, this action would facilitate a reasonable worst-case development scenario with a maximum building height of 115 feet and a maximum developable floor area of 159,352 gsf. The RWCDS assumes that this maximum developable floor area would be split between 130,896 gsf of residential use with 154 units, 30 percent (46 units) of which would be classified as affordable, and 28,456 gsf of commercial uses on the bottom floor. The proposed action would affect ten additional tax lots under the Future With-Action Scenario, five of which are projected to be redeveloped. These additional projected development sites include Block 1133, Lots 45, 48, 49, 51 and 52. Under this analysis these sites are projected to be developed with an additional 50,094 gsf of residential floor area with 59 units, of which approximately 18 would be affordable. In addition, these sites would experience a net increase in commercial floor area of 10,890 gsf.

Under the With-Action Scenario, the existing warehouse and commercial buildings would be demolished to accommodate new construction. The Future With-Action Condition would result in the loss of 25,930 gsf of industrial/manufacturing space and 1,200 gsf of transportation/utility space, and the redevelopment of 3,890 gf of existing commercial space currently on lots 48 and 49, as shown **Tables 1.5-1** and **1.5-2**. Overall, the With-Action Scenario would result in the addition of 213 residential units to the project area, of which approximately 64 units would be classified as affordable.

Recent years have seen some commercial, residential and community facility development in proximity to the rezoning area, with several non-conforming residential uses within 400 feet of the rezoning area. The proposed action would reinforce this trend towards a more active residential mixed-use neighborhood, which is common in the residential areas south of the rezoning area and consistent with 1050 Pacific Street rezoning proposal. Therefore, the proposed action is not expected to have any adverse impacts on surrounding land uses.

2.1.2 Zoning

The *New York City Zoning Resolution* (ZR) dictates the use, density and bulk of developments within New York City. Additionally, the ZR provides required and permitted accessory parking regulations. The City has three basic zoning district classifications – residential (R), commercial (C), and manufacturing (M). These classifications are further divided into low-, medium-, and high-density districts.

Existing Conditions

Zoning designations within and around the project study area are depicted in **Figure 2.1-2**, while **Table 2.1-1** summarizes use, floor area and parking requirements for the zoning districts in the study area. The rezoning area and majority of the study area are located within an M1-1 zoning district. The M1-1 district is a light-performance and low-density manufacturing zoning district in which Use Groups 4 to 14, 16 and 17 are allowed. Light industries typically found such zoning districts include woodworking shops, auto shops and wholesale service and storage facilities. Offices and most retail uses are also permitted, as well as certain community facilities as-of-right or by special permit. M1-1 districts permit an FAR for manufacturing and commercial uses of up to 1.0, and an FAR for community facilities up to a 2.4.

Table 2.1-1 Summary of Zoning Regulations

Zoning District	Type and Use Group (UG)	Floor Area Ratio (FAR)	Parking (Required Spaces)
M1-1	Light Manufacturing UGs 4-14, 16, 17	1.0 FAR – Manufacturing 1.0 FAR – Commercial 2.4 FAR – Community Facility	Varies by Use
R6A	Residential UGs 1-4	3.0 FAR – Residential 3.0 FAR – Community Facility	50 percent of dwelling units (waived if 5 or fewer spaces required)
R6B	Residential UGs 1-4	2.0 - 2.2 FAR – Residential 2.0 FAR – Community Facility	50 percent of dwelling units (waived if 5 or fewer spaces required)
R7D	Residential UGs 1-4	4.2 FAR – Residential (QH) 5.6 FAR – Residential (Inclusionary housing) 4.2 FAR – Community Facility FAR	50 percent of dwelling units (waived if 5 or fewer spaces required)
C2-4	Commercial Overlay UGs 5-9 & 14	1.0 - 2.0 FAR – Commercial	Generally Not Required

Source: *Zoning Handbook*, New York City Department of City Planning, January 20011

South of Dean Avenue, a portion of the 400-foot study area is zoned R6A. The R6A district is a medium-density contextual residential district that mandates the Quality Housing Program for new residential buildings. The Quality Housing Program establishes bulk regulations that set height limits and allow high lot coverage buildings that are set at or near the street line. Quality Housing buildings must also have amenities related to the planting of trees, landscaping and recreation space. R6A zoning districts permit a maximum Floor Area Ratio (FAR) of 3.0 for residences and community facilities. The base height of a building before a ten-foot setback is between 40 and 60 feet, with a maximum building height of 70 feet. All open areas between the street wall and front lot line must be planted.

An additional portion of the study area south of Bergen Street is zoned R6B, which often has traditional row-houses and attempts to preserve the scale and harmonious streetscape of neighborhoods. The FAR of 2.0 and the mandatory Quality Housing regulations also accommodate apartment buildings at a similar four- to five-story scale. The base height of a new building before setback must be between 30 and 40 feet, with a maximum height of 50 feet.

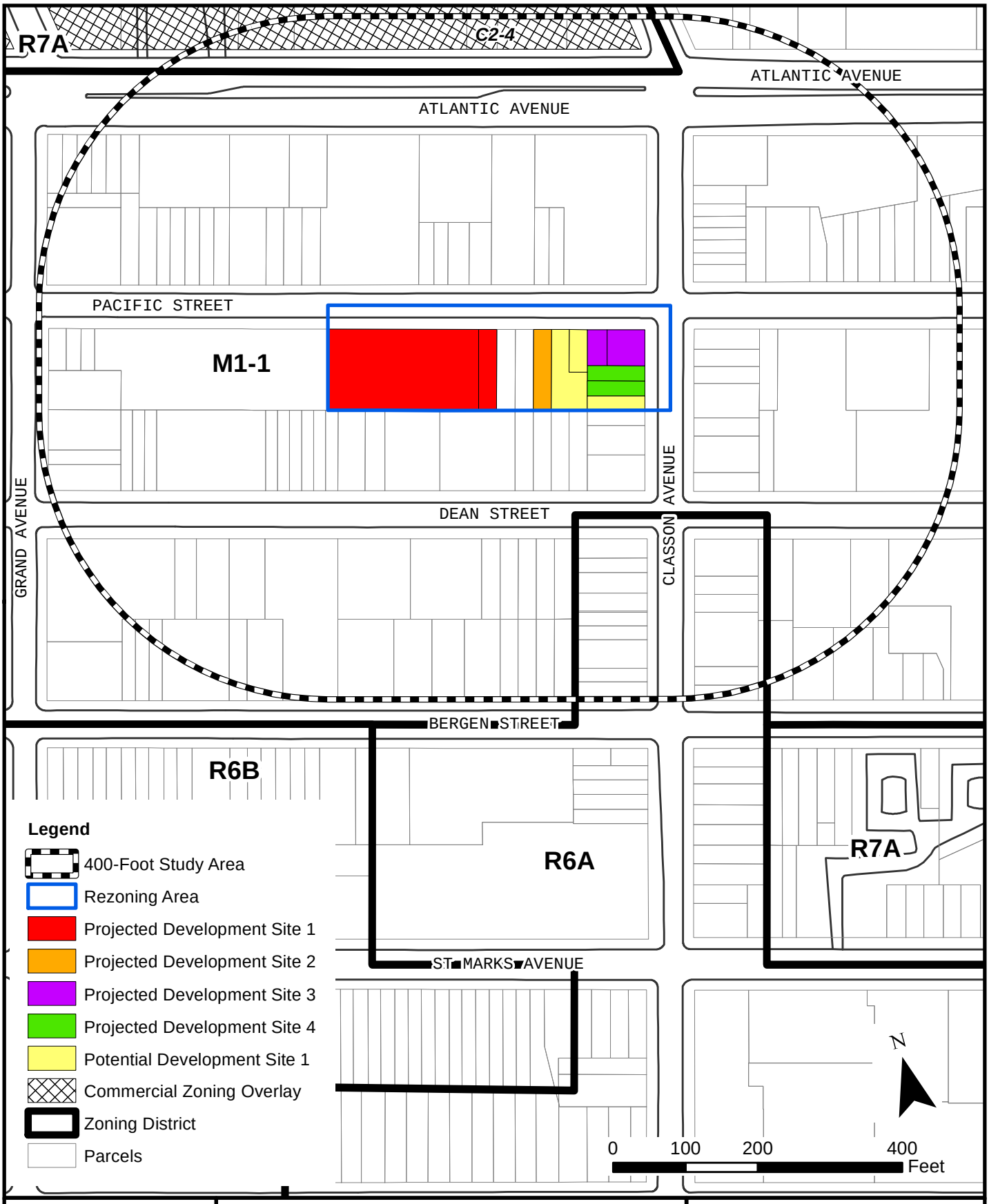

AECOM

Environmental Assessment Statement
1010 Pacific Street Rezoning
Prospect Heights, Brooklyn, NY

Zoning Map

Figure 2.1-2

An R7A zoning district is also mapped north of the rezoning area. The contextual Quality Housing regulations, which are mandatory in R7A districts, typically produce high lot coverage, seven- and eight-story apartment buildings, blending with existing buildings in many established neighborhoods. The FAR in R7A districts is 4.0. Above a base height of 40 to 65 feet, the building must set back to a depth of 10 feet on a wide street and 15 feet on a narrow street before rising to a maximum height of 80 feet. A C2-4 commercial overlay is also mapped in this portion of the study area, on the northern side of Atlantic Avenue, west of Classon Avenue. The C2-4 overlay district allows a wide range of uses, including neighborhood grocery stores, restaurants, beauty parlors, funeral homes and local repair shops. The maximum commercial FAR is 2.0 when mapped within R6-R10 zoning districts, or 1.0 when mapped within R1-R5 zoning districts.

Future No-Action Condition

In the future without the proposed action, zoning changes are not expected to occur within the rezoning area. Because the Applicant may not construct new residential square footage on the Projected Development Site 1 without the proposed zoning map and text amendments, it is assumed that the rezoning area would remain consistent with existing conditions. Therefore, if the mapping of the requested R7D/C2-4 zoning district and inclusionary housing designated area are not granted, the existing conditions would continue in the Future No-Action Scenario.

Zoning changes are not expected to occur within surrounding study area, with one potential exception. As noted above, on rezoning proposal has been identified within the study area. If the proposed 1050 Pacific Street rezoning is approved, the western portion of Block 1134 (within approximately 225 feet of Classon Avenue) would be changed from M1-1 to an MX: R7A/M1-4 and the area would be mapped as an MIH area.

Future With-Action Condition

The proposed zoning map amendment would change the existing M1-1 district to an R7D/C2-4 district over Block 1133, Lots 32, 42, 43, 44, 45, 46, 47, 48, 49, 51, 52, and 53. Additionally, a zoning text amendment is proposed for *ZR* Appendix F to map an inclusionary housing designated area over the rezoning area. The proposed R7D/C2-4 zoning district would allow medium-density apartment buildings at a maximum FAR of 5.6 for developments that provide affordable housing pursuant to the MIH program requirements. The maximum building height for eligible MIH program buildings with qualifying ground floors is 115 feet or 11 stories. Buildings must set back above a maximum base height of 95 feet to a depth of 10 feet on a wide street and 15 feet on a narrow street before rising up to the maximum building height. Off-street parking is required for 50 percent of the residential dwelling units, but is not required for affordable housing units within the Transit Zone.

The proposed C2-4 commercial district would be mapped to a depth of 100 feet from Pacific Street. The proposed C2-4 commercial overlay mapped with the R7D district requires active ground floor uses. The proposed C2-4 district permits Use Groups 5 through 9 and 14 allowing commercial development with up to 2.0 FAR.[1] The proposed C2-4 overlay district requires one accessory parking space per 1,000 square feet of commercial floor area for general retail or service uses. Mapping an R7D/C2-4 in this area would provide opportunities for medium-density housing development under the MIH program with required active commercial and community facility uses on the ground floor.

[1] Note, however, that Use Group 5 uses would not be permitted within the rezoning area because of its distance from a limited access highway.

The proposed rezoning would provide new opportunities for affordable and market-rate housing and commercial development in an underutilized area. The increase in density to the proposed R7D/C2-4 district would facilitate the development of greatly needed housing, including affordable housing in Community District 8. The proposed R7D/C2-4 zoning district would promote the development of underused sites, address the City's growing need for additional housing and help reknit the urban fabric in the area. There is existing residential development within the proposed rezoning area and residential development is a common land use in the surrounding area. The existing M1-1 zoning district is surrounded by residential development in an area well-served by transit.

The proposed zoning map amendment would promote the development of new medium-density housing, which would provide for the productive and more intensive reuse of underutilized industrial property, address the City's growing need for additional housing and better integrate the site with the Prospect Heights neighborhood. The proposed action's affordable housing component would address the City's *Housing New York: A Five-Borough, Ten-Year Plan* goals by increasing affordable housing opportnities to help ensure the community remains economically diverse in the face of increasing pressure for market-rate development. The proposed R7D zoning district is an appropriate density due rezoning area's accessibility to public transit. The proposed zoning overlay supports the development of new ground floor commercial uses to serve the neighborhood, provide jobs, and enliven the Pacific Street streetscape. Therefore, significant adverse impacts to zoning are not anticipated and further zoning analysis is not warranted.

2.1.3 Public Policy

The rezoning area is not part of, or subject to, an Urban Renewal Plan (URP), adopted community 197-a Plan, Solid Waste Management Plan, Business Improvement District (BID), Industrial Business Zone (IBZ), or the New York City Landmarks Law. The proposed action is also not a large publically sponsored project, and as such, consistency with the City's PlaNYC 2030 for sustainability is not warranted. In addition, as the study area is not located within New York City's designated Coastal Zone, the proposed action is not subject to review for consistency with the City's Waterfront Revitalization Program.

As previously noted, one active land use application has been identified in the study area. DCP is currently reviewing the proposed 1050 Pacific Street Rezoning, which, if approved, would change the western portion of Block 1134 (Lots 2, 4, 5, 7-9, 11, 12, 96, 97, and p/o 17) from M1-1 to an MX: R7A/M1-4. The affected area would also be mapped as an MIH.

The proposed rezoning would be consistent with the de Blasio administration's housing plan, known as Housing New York. Development within the rezoning area would provide up to 64 units of affordable housing, advancing the Mayor's goal of building and preserving 200,000 affordable units in New York City by 2024[2]. Therefore, there are no anticipated significant adverse impacts to public policy.

The following is a summary of relatively recent land use actions that have affected portions of the study area and surrounding area.

Prospect Heights Rezoning

As part of the 1994 Prospect Heights Rezoning (CEQR No. 93DCP037K), a large, 53-block area within the Prospect Heights neighborhood was rezoned from predominantly R6 to contextual R6B, R6A, R7A, and R8X districts, with commercial overlays along Washington, Vanderbilt, and Flatbush Avenues.

[2] *Housing New York: A Five-Borough, Ten-Year Plan*

Prospect Heights is situated west of the rezoning area. The easternmost boundary of the Prospect Heights Rezoning, located 100 feet west of Grand Avenue, is approximately one block west of the proposed rezoning area.

Fort Greene/Clinton Hill Rezoning

In 2007, much of the area north of Atlantic Avenue was rezoned as part of the Fort Greene/Clinton Hill Rezoning (CEQR No. 07DCP066K). A 99-block area within the Fort Greene and Clinton Hill section of Community District 2 was rezoned from predominantly R6 to contextual R5B, R6A, R6B, R7A districts. The goal of the rezoning was to preserve the neighborhoods' predominantly low-rise brownstone character and protect it against out-of-scale development.

Bedford-Stuyvesant South Rezoning

The proposed rezoning area is located two blocks south of the southwestern boundary of the Bedford-Stuyvesant South Rezoning (ULURP Nos. 070447ZMK and 070448ZRY and CEQR No. 07DCP070K). The rezoning was approved by the City Planning Commission on September 5, 2007 and adopted by the City Council on October 29, 2007 (Resolution No. 1135-2007). This comprehensive zoning proposal was developed by DCP at the request of local elected officials, Brooklyn Community Board 3, and local community organizations. The Bedford-Stuyvesant South rezoning area is generally bounded by Lafayette Avenue and Quincy Street to the north, Classon Avenue to the west, Saratoga Avenue and Broadway to the east, and Atlantic Avenue to the south. The goals of the rezoning were to preserve neighborhood scale and character, to maintain opportunities for mid-rise apartment building construction along appropriate corridors, and to allow for residential growth with incentives for affordable housing along the Fulton Street transit and retail corridor.

The rezoning included a Zoning Map Amendment to rezone all of portions of approximately 206 blocks in the Brooklyn neighborhood of Bedford-Stuyvesant from R5, R6, M1-1, and C4-3 districts to R5B, R6B, R6A, R7D, C4-5D, and M1-1/R7D districts and also included a Zoning Text Amendment to establish R7D and C4-5D zoning districts, the Special Mixed Use District 10 on Atlantic and Howard Avenues, and to apply the Inclusionary Housing program to portions of Fulton Street, Nostrand Avenue, and Atlantic Avenue. The rezoning application, including both the Zoning Map Amendment and the Zoning Text Amendment, was reviewed pursuant to the New York State Environmental Quality Review Act (SEQRA) and the City Environmental Quality Review (CEQR) Rules and Procedure of 1991 and Executive Order No. 91 of 1977. An Environmental Assessment Statement (EAS) was prepared and submitted on May 4, 2007. The lead agency for this EAS was the City of New York City Planning Commission. The EAS included impact analyses for the categories of Land Use, Zoning, and Public Policy, Socioeconomic Conditions, Community Facilities, Open Space, Shadows, Historic Resources, Urban Design/Visual Resources, Neighborhood Character, Natural Resources, Hazardous Materials, Infrastructure, Solid Waste and Sanitation, Energy, Traffic and Parking, Transit and Pedestrians, Air Quality, Noise, Construction Impacts, and Public Health. A negative declaration was issued on May 7, 2007 following a study of the environmental impact of the subject application. The negative declaration included (E) designations to avoid the potential for impacts related to hazardous materials, air quality, and noise.

470 Vanderbilt Avenue Rezoning

In 2009, the 470 Vanderbilt Rezoning mapped a C6-3A (R9A equivalent) district on the block bounded by Atlantic Avenue, Fulton Street, Claremont Avenue, and Vanderbilt Avenue (CEQR No. 09DCP081K) to facilitate development of a 376-unit new mixed-use building with ground floor retail.

Crown Heights West Rezoning

The proposed rezoning area is located approximately one block north of the northwestern boundary of the Crown Heights West Rezoning (ULURP No. 130213ZMK and CEQR No. 13DCP105K). The rezoning was approved by the City Planning Commission on August 7, 2013 and adopted by the City Council on September 24, 2013 (Resolution No. 1940-2013). This comprehensive zoning proposal was developed by DCP at the request of Brooklyn Community Board 8 and local elected officials. The Crown Heights West rezoning area is generally bounded by Pacific Street, Dean Street, and Bergen Street to the north; Nostrand Avenue to the east; Eastern Parkway to the south; and Washington Avenue and Grand Avenue to the west. The goals of the rezoning were to protect the neighborhood's character from out-of-scale development and to create opportunities for the development of affordable housing at appropriate locations.

The rezoning included a Zoning Map Amendment to rezone all or portions of 55 blocks in Brooklyn Community District 8, which mapped contextual zoning districts and established new Inclusionary Housing Areas. The rezoning also included a Zoning Text Amendment to create new Inclusionary Housing Designated Areas in Brooklyn Community District 8 and to modify height and setback regulations along Eastern Parkway. The rezoning application, including both the Zoning Map Amendment and the Zoning Text Amendment, was reviewed pursuant to the New York State Environmental Quality Review Act (SEQRA) and the City Environmental Quality Review (CEQR) Rules and Procedure of 1991 and Executive Order No. 91 of 1977. An Environmental Assessment Statement (EAS) was prepared and submitted on March 14, 2013. The lead agency for this EAS was the City of New York City Planning Commission. The EAS included impact analyses for the categories of Land Use, Zoning, and Public Policy, Socioeconomic Conditions, Community Facilities, Open Space, Shadows, Historic and Cultural Resources, Urban Design/Visual Resources, Hazardous Materials, Infrastructure, Solid Waste and Sanitation, Energy, Transportation, Air Quality, and Noise. A negative declaration was issued on March 18, 2013 following a study of the environmental impact of the subject application. The negative declaration included (E) designations to avoid the potential for impacts related to noise and hazardous materials.

Other Land Use Actions

The Board of Standards and Appeals (BSA) under Cal. No. 165-05-BZ granted a use variance pursuant to ZR §72-21 to permit a four-story residential building located a block to the south of the rezoning area at 799-805 Bergen Street (Block 1141, Lots 76-79) with 31 dwelling units contrary to the M1-1 district use provisions. In granting the use variance, the BSA found that conforming manufacturing use would not be financially feasible at this site.

At the northern edge of the study area, the Landmarks Preservation Commission designated the James W. and Lucy S. Elwell House located north of the rezoning area at 70 Lefferts Place (Block 2019, Lot 16) as an individual landmark on December 12, 2006 (LP-02215).

2.2 SOCIOECONOMICS

The *CEQR Technical Manual* provides guidelines to evaluate whether a proposed action or actions would result in significant adverse socioeconomic impacts. The socioeconomic character of an area includes its population, housing, and economic activity. Socioeconomic changes may occur when a project directly or indirectly changes any of these elements. Although socioeconomic changes may not result in impacts under CEQR, they are disclosed if they would affect land use patterns, low-income populations, the

availability of goods and services, or economic investment in a way that changes the socioeconomic character of the area. In some cases, these changes may be substantial but not adverse. In other cases, these changes may be good for some groups but bad for others. The objective of the CEQR analysis is to disclose whether any changes created by the project would have a significant impact compared to what would happen in the future without the project.

As stated in the *CEQR Technical Manual*, the assessment of socioeconomic conditions usually separates the socioeconomic conditions of area residents from those of area businesses, although projects may affect both in similar ways. Projects may directly displace residents or businesses or may indirectly displace them by altering one or more of the underlying forces that shape socioeconomic conditions in an area. Usually, economic changes alone need not be assessed; however, in some cases their inclusion in a CEQR review may be appropriate, particularly if a major industry would be affected or if an objective of a project is to create economic change.

A socioeconomic assessment under CEQR should be conducted if a project may be reasonably expected to create socioeconomic changes within the area affected by the project that would not be expected to occur without the project. The following circumstances would typically require a more detailed socioeconomic assessment:

- The project would directly displace residential population to the extent that the socioeconomic character of the neighborhood would be substantially altered. Displacement of less than 500 residents would not typically be expected to alter the socioeconomic character of a neighborhood.

- The project would directly displace more than 100 employees.

- The project would directly displace a business that is unusually important because its products or services are uniquely dependent on its location; based on its type or location, it is the subject of other regulations or publicly adopted plans aimed at its preservation; or it serves a population uniquely dependent on its services in its present location.

- The project would result in substantial new development that is markedly different from existing uses, development, and activities within the neighborhood. Such a project may lead to indirect displacement. Typically, projects that are small to moderate in size would not have significant socioeconomic effects unless they are likely to generate socioeconomic conditions that are very different from existing conditions in the area. Residential development of 200 units or less or commercial development of 200,000 square feet or less would typically not result in significant socioeconomic impacts.

- The project would add to, or create, a retail concentration that may draw a substantial amount of sales from existing businesses within the study area to the extent that certain categories of business close and vacancies in the area increase, thus resulting in a potential for disinvestment on local retail streets. Projects resulting in less than 200,000 square feet of retail on a single development site would not typically result in socioeconomic impacts. If the proposed development is located on multiple sites located across a project area, a preliminary analysis is likely only warranted for retail developments in excess of 200,000 square feet that are considered of regional-serving (not the type of retail that primarily serves the local population).

- If the project is expected to affect conditions within a specific industry. For example, a citywide regulatory change that would adversely affect the economic and operational conditions of certain types of businesses or processes may affect socioeconomic conditions in a neighborhood in two ways: (1) if a substantial number of residents or workers depend on the goods or services provided by the affected businesses; or (2) if it would result in the loss or substantial diminishment of a particularly important product or service within the City.

The proposed action could result in an increment of 213 residential units, which exceeds the CEQR threshold of 200 units established for further assessment of potential indirect residential displacement. As a result, a preliminary socioeconomic assessment was undertaken.

Indirect Residential Displacement

As indicated in the *CEQR Technical Manual*, "the objective of the indirect residential displacement analysis is to determine whether the proposed project may either introduce a trend or accelerate a trend of changing socioeconomic conditions that may potentially displace a vulnerable population to the extent that the socioeconomic character of the neighborhood would change." The risk of indirect residential displacement is typically associated with rising rents caused by new higher-income housing that may contribute to increased area housing costs to an extent that could potentially force lower-income residents out of the neighborhood. The potential for impact is generally limited to households in unprotected, private rental units.

The proposed action could result in the development of a net increase of 213 dwelling units. Based on census data, the average household size is 2.23 persons per dwelling unit in the census tracts located within the immediate ¼-mile radius of the Rezoning Area[3]. The development of 213 dwelling units would therefore be expected to generate approximately 475 new residents in the study area.

The study area is comprised of the 15 census tracts that have 50 percent or more of the tract's area within a ½-mile radius surrounding the Rezoning Area (**Figure 2.2-1**). According to 2016 U.S. Census American Community Survey population data that was compiled by the New York City Department of City Planning, approximately 58,177 residents resided in the study area in 2016. Assuming a standard background growth rate of 0.5 percent per year, the 2018 population is estimated to be approximately 58,759 residents (**Table 2.2-1**).

[3] Based on the average household size for Census Tracts 305 (2.14 persons/household), 203 (2.17 persons/household) and 227 (2.37 persons/household).

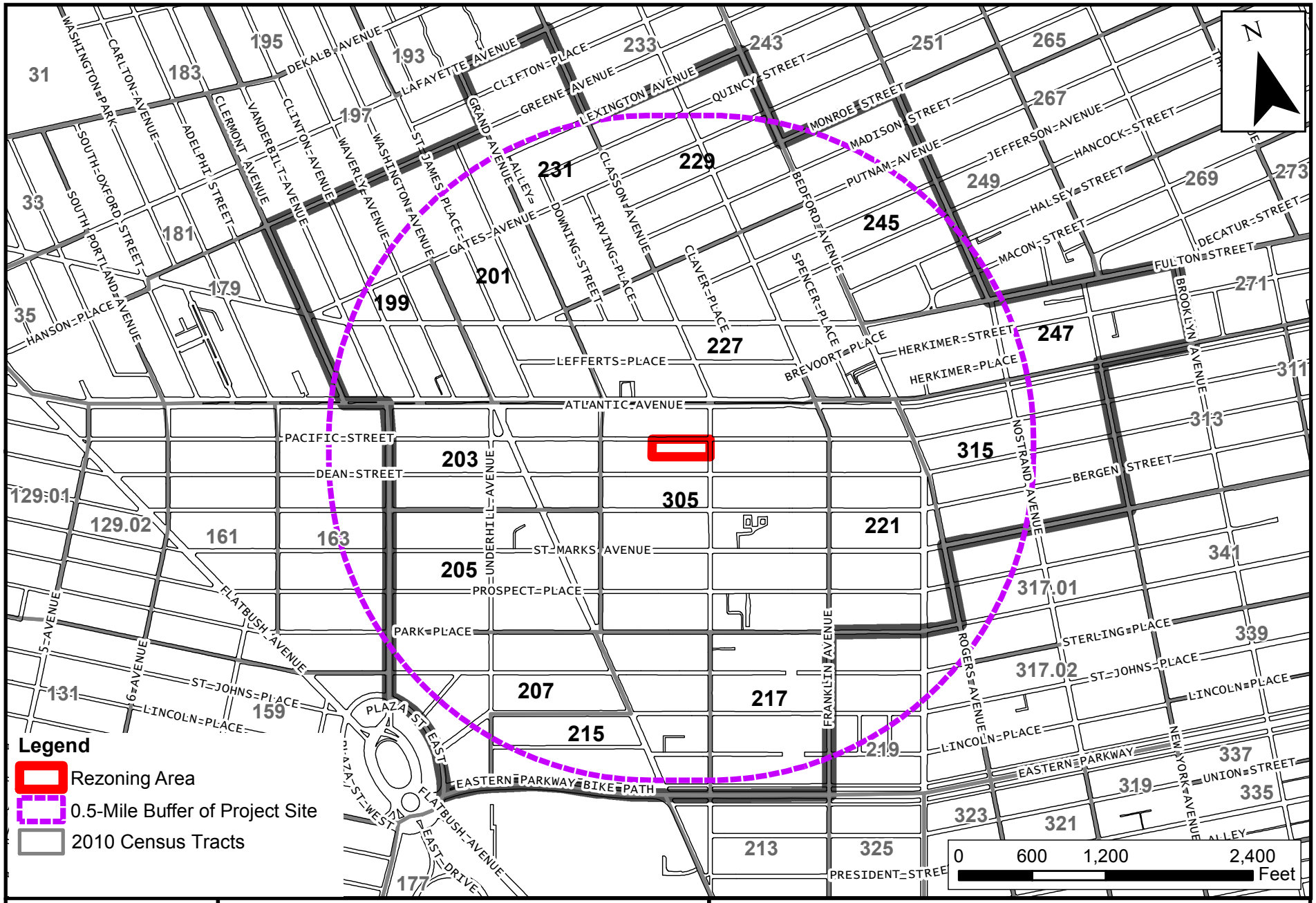

AECOM

Environmental Assessment Statement
1010 Pacific Street Rezoning
Prospect Heights, Brooklyn, NY

Socioeconomic Study Area

Figure 2.2-1

Table 2.2-1 Census Tracts and Population in the Study Area

Census Tract	2016 Population	Existing Population (2018 Projected)
199	3,454	3,489
201	3,828	3,866
203	1,776	1,794
205	2,703	2,730
207	4,310	4,353
215	5,166	5,218
217	3,906	3,945
221	4,014	4,054
227	3,972	4,012
229	3,719	3,756
231	3,535	3,570
245	4,223	4,265
247	2,295	2,318
305	6,042	6,103
315	5,234	5,286
Total	**58,177**	**58,759**

Source: 2016 U.S. Census ACS data, provided by New York City Department of City Planning.
Notes: Shaded row indicates census tract of the Project Site.

In order to account for background growth to the 2023 build year, the standard annual growth rate of 0.5 percent per year was applied to the 2018 population of the ½-mile study area. Thus the approximately 58,759 residents in the study area in 2018 would grow to approximately 59,944 residents by 2023 in the Future No-Action Condition.

The addition of 475 residents to the Future No-Action population of 59,944 residents results in a Future With-Action population of 60,419 residents, an increase of 0.79 percent.

Section 322.1 of Chapter 5 of the *CEQR Technical Manual* indicates that if a Proposed Action is expected to result in a study area population increase of less than 5 percent, further analysis is not warranted to assess the potential for indirect residential displacement and the proposed increase in population is not expected to affect real estate market conditions. Therefore, the Proposed Action would not result in potential impacts related to socioeconomic character and further assessment is not required.

2.3 COMMUNITY FACILITIES AND SERVICES

The *CEQR Technical Manual* defines community facilities and services as public or publicly funded schools, hospitals, libraries, day care centers and police and fire services. A community facilities analysis examines a proposed action's potential effect on the provision of services by those community facilities. Direct effects occur when a particular action physically alters or displaces a community facility; indirect effects result from increases in population, which creates additional demand on service delivery. The proposed action would not result in physical alteration or displacement of any community facilities, therefore no directs effect to existing community facilities are expected as a result of the proposed action.

However, the *CEQR Technical Manual* provides thresholds for analyses of indirect effects. Based on these thresholds, the addition of 213 dwelling units – of which 64 would be classified as affordable – does not require detailed analyses of hospitals, libraries, publicly funded day care centers, or police and fire services. However, the *CEQR Technical Manual* directs that if a proposed action could generate more than 50 public elementary and intermediate school students or 150 public high school students, a more detailed analysis is required. The proposed action is expected to generate approximately 88 public elementary and intermediate school students and 30 public high school students. Further analysis of the impacts of the proposed rezoning on public elementary and intermediate schools in this area is therefore warranted because the total number of additional students is greater than the 50-student threshold. No further analysis of the impacts of the proposed rezoning on high schools in this area is warranted because the total number of additional students is lower than the 150-student threshold.

2.3.1 Public Schools

Existing Conditions

Elementary and intermediate schools are located in geographically defined school districts, each divided into subdistricts for capital planning purposes. The proposed rezoning area falls within Community School District (CSD) 17, Subdistrict 1, as shown in **Figure 2.3-1**. The *CEQR Technical Manual* states that the study area for the analysis of elementary and intermediate schools should be the subdistrict in which the project is located.

Tables 2.3-1 and **2.3-2** show the elementary and middle/intermediate schools within the study area, consisting of those elementary and middle/intermediate schools within CSD 17, Subdistrict 1. As of the 2016-2017 school year, the schools within the study area have an average utilization level of approximately 69 percent for elementary level schools with approximately 1,210 available elementary school seats, and an average utilization level of approximately 58 percent for middle/intermediate level schools with approximately 576 available intermediate school seats. As these figures demonstrate, the utilization rates for both public elementary and intermediate schools within the subdistrict are collectively operating well below capacity.

Future No-Action Condition

In the future without the proposed action, it is assumed that the existing uses in the rezoning area would operate under their present conditions. According to the latest projections made available by the New York City Department of Education (DOE) and the estimated percentages of enrollment by zone, elementary and intermediate school enrollment in CSD 17, Subdistrict 1 is expected to total 2,352 and 744 students respectively in 2023-2024.[4] With the addition of an assumed increase in students based on housing projections for CSD 17, Subdistrict 1, these totals increase to 2,785 elementary students and 926 intermediate students.[5] There are no plans for capacity increases or decreases for schools within the subdistrict between now and the build year (2023). Therefore, under the Future No-Action Condition, it is projected that public elementary schools within CSD 17, subdistrict 1 would operate at 72 percent utilization, and public intermediate schools would operate at 68 percent utilization.

[4] *Enrollment Projections 2016 to 2025: New York City Public Schools* by Statistical Forecasting
[5] *Housing by School District 2016*, provided by the Department of City Planning (March 2018)

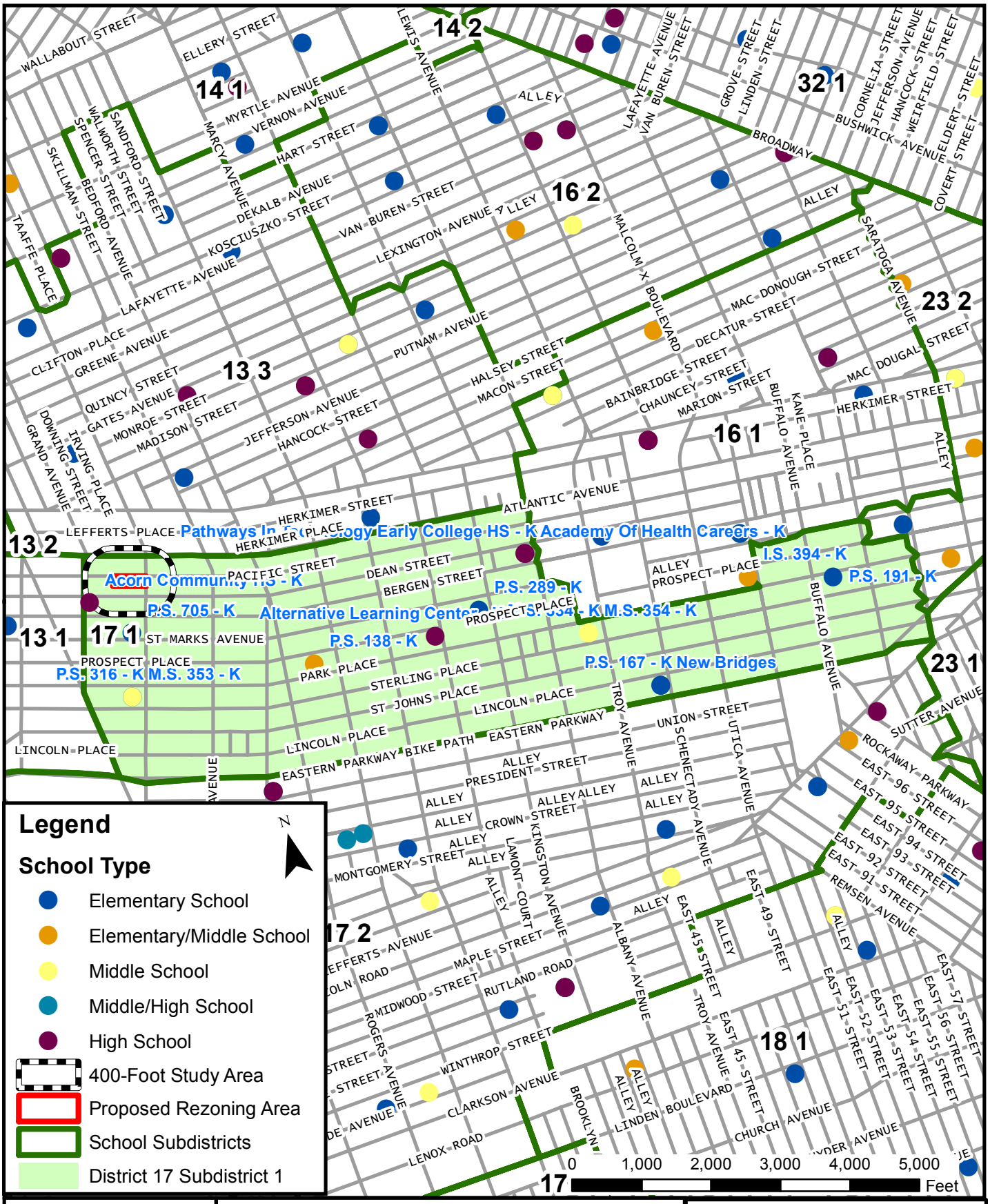

AECOM

Environmental Assessment Statement
1010 Pacific Street Rezoning
Prospect Heights, Brooklyn, NY

Public Schools in Vicinity of the Proposed Rezoning Area

Figure 2.3-1

Table 2.3-1 Public Elementary Schools within CSD 17, Subdistrict 1: Enrollment, Capacity and Utilization

Map Key No.	Facility Name	Facility Address	CSD / Subdistrict	Enrollment	Target Capacity	Available Seats	Utilization (Percent)
1	PS 138*	760 Prospect Place	17 / 1	339	635	296	53%
2	PS 191	1600 Park Place	17 / 1	192	323	131	59%
3	PS 289	900 St. Marks Avenue	17 / 1	409	709	300	58%
4	PS 316	750 Classon Avenue	17 / 1	489	456	-33	107%
5	IS 394*	188 Rochester Avenue	17 / 1	392	481	89	82%
6	PS 167	1025 Eastern Parkway	17 / 1	471	982	511	48%
7	PS 22 (aka PS 705)	443 St. Marks Avenue	17 / 1	378	294	-84	129%
			Total	**2,670**	**3,880**	**1210**	**69%**

Source: NYC Department of Education, *Enrollment/Capacity/Utilization Report 2016-2017 School Year*
* P.S. component of P.S./I.S. schools

Table 2.3-2 Public Intermediate Schools within CSD 17, Subdistrict 1: Enrollment, Capacity and Utilization

Map Key No.	Facility Name	Facility Address	CSD / Subdistrict	Enrollment	Target Capacity	Available Seats	Utilization (Percent)
8	PS 138*	760 Prospect Place	17 / 1	244	457	213	53%
9	MS 353	750 Classon Avenue	17 / 1	164	287	123	57%
10	MS 354	1224 Park Place	17 / 1	223	427	204	52%
11	IS 394*	188 Rochester Avenue	17 / 1	160	196	36	82%
			Total	**791**	**1,367**	**576**	**58%**

Source: NYC Department of Education, *Enrollment/Capacity/Utilization Report 2016-2017 School Year*
* I.S. component of P.S./I.S. schools

Future With-Action Condition

As stated in the *CEQR Technical Manual*, for the purposes of CEQR analysis, a Future With-Action base utilization rate of 100 percent is the utilization threshold for overcrowding. As such, according to CEQR, a significant adverse impact may result; warranting consideration of potential mitigation, if the proposed action would result in both of the following conditions:

- A collective utilization rate of the elementary and/or intermediate schools in the sub-district study area that is equal to or greater than 100 percent in the Future With-Action Condition; and

- An increase of five percent or more in the collective utilization rate between the Future No-Action and Future With-Action conditions.

Under the proposed action, an additional 213 dwelling units are expected to be developed on the projected development sites by 2023. This would generate 62 elementary and 26 intermediate school students by the 2023 analysis year, as shown in **Tables 2.3-3**, **2.3-4** and **2.3.5**.

Table 2.3-3 Public School Students Generated by the Proposed Rezoning

	Project-Generated DUs	P.S. Students	I.S. Students	Total P.S./I.S. Students
CSD 17 Subdistrict 1	213	62	26	88

Source: *CEQR Technical Manual,* 2014, Table 6-1a

Table 2.3-4 Projected Public Elementary School Enrollment, Capacity and Utilization in 2023 with the Proposed Action

	Future No-Action Projected Enrollment 2023	Students Generated by Proposed Action	Total Projected Enrollment 2023	Capacity	Seats Available	Utilization
CSD 17 Subdistrict 1	2,785	62	2,847	3,880	1,033	73%

Table 2.3-5 Projected Public Intermediate School Enrollment, Capacity and Utilization in 2023 with the Proposed Action

	Future No-Action Projected Enrollment 2023	Students Generated by Proposed Action	Total Projected Enrollment 2023	Capacity	Seats Available	Utilization
CSD 17 Subdistrict 1	926	26	952	1,367	415	70%

In the future with the proposed action, elementary schools in the study area are projected to have an average utilization level of approximately 73 percent. The addition of approximately 62 elementary school-aged students to the area would increase the utilization rate at a change of approximately one percent. The collective utilization rate for the elementary schools in the study area would continue to be below 100 percent under the Future With-Action Condition, and the increase in the collective utilization rate would be less than five percent.

In the future with the proposed action, intermediate schools in the study area are projected to have an average utilization level of approximately 70 percent. The addition of approximately 26 intermediate school-aged students to the area would increase the utilization rate at a change of approximately three percent. The collective utilization rate for the intermediate schools in the study area would continue to be below 100 percent under the Future With-Action Condition, and the increase in the collective utilization rate would be less than five percent.

Therefore, the proposed action is not expected to result in significant adverse impacts to elementary or middle/intermediate schools in the study area and further assessment of educational facilities is not warranted.

2.4 OPEN SPACE

Open space is defined as publicly or privately owned land that is publicly accessible and operates, functions, or is available for leisure, play, or sport, or set aside for the protection and/or enhancement of the natural environment. According to the *CEQR Technical Manual*, an analysis of open space is conducted to determine whether or not a project would have a direct impact resulting from the elimination or alteration of open space and/or indirect impacts resulting from overtaxing available open space. An open space analysis focuses on officially designated existing or planned public open space. An open space assessment may be necessary if a project potentially has a direct or indirect effect on open space.

For the majority of new projects in New York City located in areas that are neither “underserved” or “well-served” area for open space, an open space assessment is generally conducted if the proposed action would generate more than 200 residents or 500 employees. The proposed rezoning area is located in an “underserved” area for open space, which has listed thresholds of 50 additional residents or 125 additional employees for further study. The proposed action would potentially add up to approximately 455 residents in 213 units (based on an average of 2.14 persons per unit),[6] as well as approximately nine employees[7] to the neighborhood who would work in the new buildings. In addition to these employees, the RWCDS assumes the addition of an incremental 35,456 square feet of commercial floor area in the rezoning area, as well as the removal of existing industrial and transportation/utility uses. Thus it is estimated that that an increment of approximately 85 employees would be generated by the proposed action[8] which is below the 125 employee threshold for further study. As the number of new residents anticipated as a result of the proposed action is above the CEQR preliminary screening threshold level of 50 residents, a preliminary analysis of open space impacts due to new residents is warranted.

[6] Based on the average household size for Census Tracts 305 (2.14 persons/household) and 307 (2.13 persons/household)
[7] Assuming one employee per 25 dwelling units
[8] The employee estimate is based on standard industry rate assumptions: one residential employee per 25 dwelling units, three employees per 1,000 sf of commercial retail and transportation/utility uses, and one employee per 1,000 sf of industrial uses.

2.4.1 Preliminary Open Space Assessment

The open space study area includes all U.S. Census Tracts that have 50 percent or more of the tract within a 0.5-mile radius of the proposed rezoning area, as shown in **Figure 2.4-1** and exhibited in **Table 2.4-1**. The proposed rezoning area is located within Brooklyn Census Tract 305, and the 0.5-mile study area lies within Brooklyn Community Districts 2, 3 and 8.

Table 2.4-1 Census Tracts and Population in the Study Area

Census Tract	2016 Population	Existing Population (2018 Projected)
199	3,454	3,489
201	3,828	3,866
203	1,776	1,794
205	2,703	2,730
207	4,310	4,353
215	5,166	5,218
217	3,906	3,945
221	4,014	4,054
227	3,972	4,012
229	3,719	3,756
231	3,535	3,570
245	4,223	4,265
247	2,295	2,318
305	6,042	6,103
315	5,234	5,286
Total	**58,177**	**58,759**

Source: 2016 U.S. Census ACS data, provided by New York City Department of City Planning.
Notes: Shaded row indicates census tract of the Project Site.

Existing Conditions

According to 2016 U.S. Census American Community Survey population data that was compiled by the New York City Department of City Planning, approximately 58,177 residents resided in the study area in 2016. Assuming a standard background growth rate of 0.5 percent per year, the 2018 population is estimated to be approximately 58,759 residents. The study area contains a total of approximately 11.70 acres of publicly-accessible open space (both active and passive), with the size of existing open space resources within this study area identified in **Table 2.4-2** and shown in **Figure 2.4-2**.

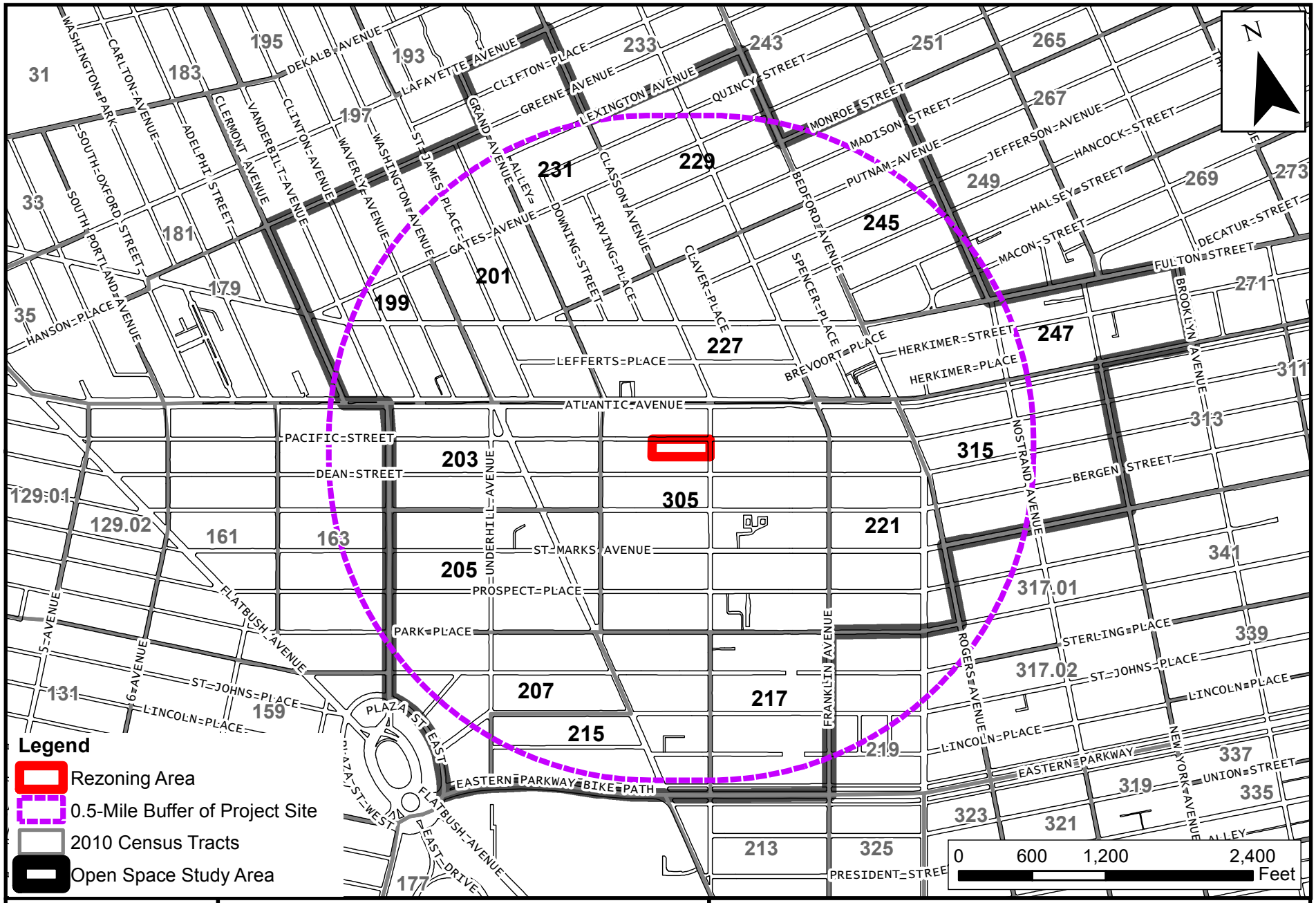

AECOM

Environmental Assessment Statement
1010 Pacific Street Rezoning
Prospect Heights, Brooklyn, NY

Open Space Study Area

Figure 2.4-1

Table 2.4-2 Open Space Resources in the Study Area

Map No.	Resource Name	Location	Size (acres)		
			Total	Active	Passive
1	Crispus Attucks Playground	Classon Ave. between Fulton St. and Lefferts Pl.	0.95	0.81	0.14
2	Eastern Parkway Malls	Eastern Pkwy. between Grand Army Plaza and Ralph Ave.	3.25*	2.93	0.33
3	Greene Playground	Greene Ave. between Waverly Ave. and Washington Ave.	1.26	1.01	0.25
4	John Hancock Playground	Bedford Ave., Hancock St., Jefferson Ave.	1.62	1.32	0.23
5	Lowry Triangle	Pacific St., Washington Ave., Underhill Ave.	0.33	0.00	0.11
6	Stroud Playground	Sterling Pl. to Park Pl. between Classon Ave. and Washington Ave.	1.36	1.01	0.18
7	Underhill Playground	Underhill Ave. between Prospect Pl. and Park Pl.	0.62	0.47	0.12
8	P.S. 93 (Schoolyards to Playgrounds site)	Herkimer Street and New York Ave.	0.50	0.45	0.05
9	Putnam Triangle	Fulton St., Putnam Ave., Grand Ave.	0.01	0.00	0.01
10	P.S. 9 (Schoolyards to Playgrounds site)	St. Marks Ave. between Underhill Ave. and Vanderbilt Ave.	1.00	1.00	0.00
11	P.S. 56 (Schoolyards to Playgrounds site)	Downing Street between Gates and Putnam Avenues	0.80	0.80	0.00
		Total	**11.70**	**9.80**	**1.42**

Source: NYC Open Data, NYC.gov
Note: *Represents partial area of open space within selected study area.

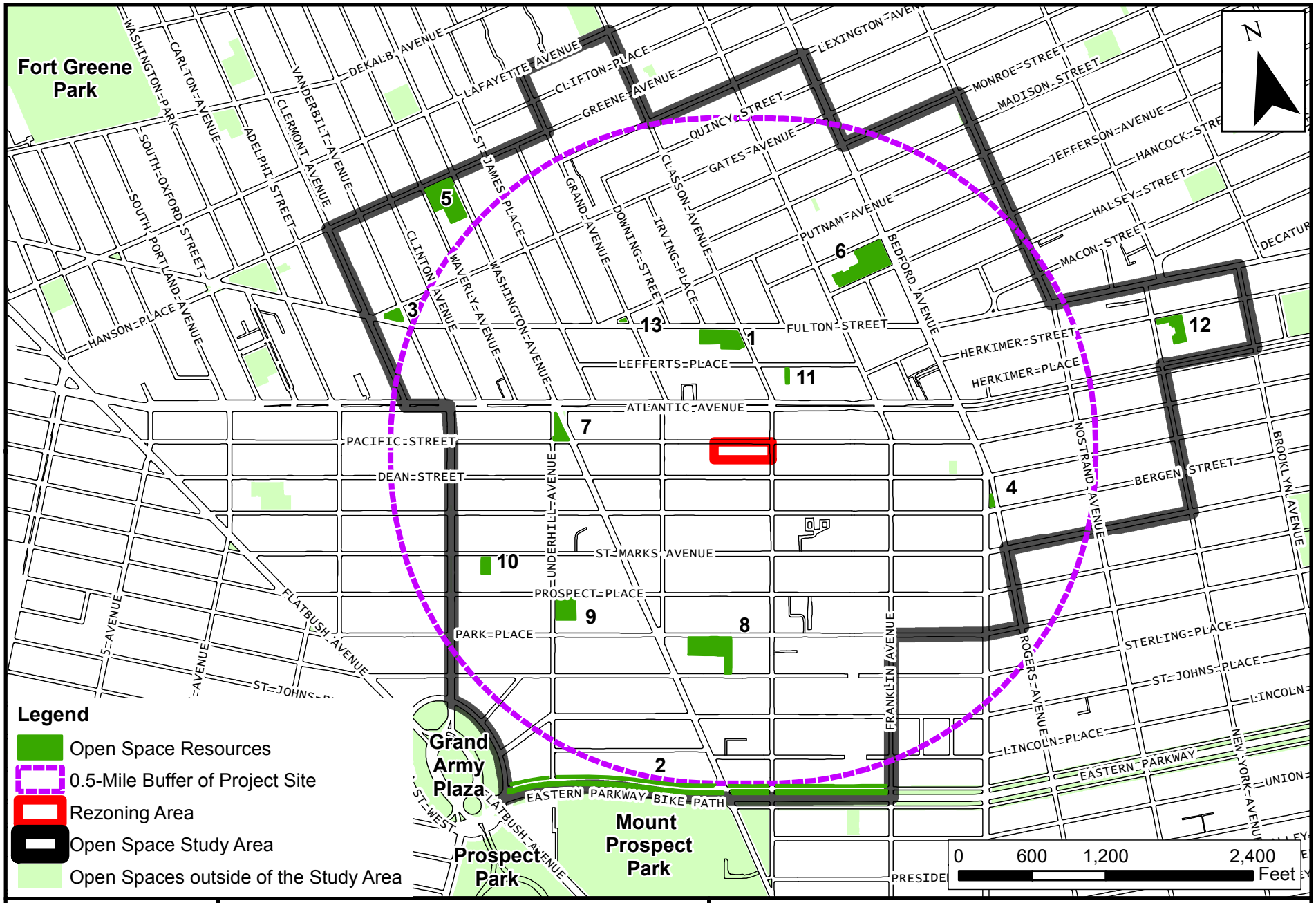

AECOM

Environmental Assessment Statement
1010 Pacific Street Rezoning
Prospect Heights, Brooklyn, NY

Open Space Resources

Figure 2.4-2

In accordance, with CEQR methodology, the assessment of open space resources in the study area focuses on the calculated open space ratio (OSR), or the ratio of the acres of open space per 1,000 persons. The existing OSR in the study area is approximately 0.199 acres per 1,000 residents, well below the City's target OSR of 1.50 acres per 1,000 residents.

Crispus Attucks Playground
This is a 0.93 acre playground with handball courts, spray showers, a basketball court, and playground equipment at the intersection of Classon Avenue and Fulton Street.

Eastern Parkway Malls
Eastern Parkway Malls run down the median of Eastern Parkway and have a variety of plantings, including trees, benches for sitting, as well has running paths, bicycling lanes, and greenways. Approximately 3.25 acres of the Eastern Parkway Malls are located within the open space study area.

Greene Playground
Greene Playground takes its name from its location on Greene Avenue, named in 1904, which runs from Fulton Street to Metropolitan Avenue. It is located at Greene Avenue between Waverly and Washington Avenues. The playground is approximately 1.26 acres and contains a number of amenities including public restrooms, basketball courts, handball courts, playground equipment, and spray showers.

John Hancock Playground
Hancock Playground is a 1.55 acre playground adjacent to P.S. 3, The Bedford Village School, at the intersection of Bedford Avenue and Hancock Street. The playground features basketball courts, handball courts, playground equipment, and spray showers, and per the Department of Parks website, is a jointly operated playground between the Department of Education.

Lowry Triangle
Lowry Triangle is a small (0.11 acre) plaza at the intersection of Underhill Avenue and Pacific Street. It has a number of tree plantings scattered throughout the plaza, including some that are fenced off, as well as benches for sitting around the perimeter of the plaza. There is a bronze portrait bust that honors the Reverend Benjamin James Lowry (1891-198A), the long-time pastor of Zion Baptist Church, located at 523 Washington Avenue in the Prospect Heights section of Brooklyn.

Stroud Playground
Stroud Playground is a 1.19 acre playground on Park Place and is adjacent to P.S. 316. They playground has basketball courts, public bathrooms, handball courts, a swing sets, and spray showers. Additionally, the playground contains many benches, a flagpole with a yardarm, three game tables, two drinking fountains, and a comfort station. Play areas include an elephant animal art sculpture, red, yellow, and green play equipment with safety surfacing. Per the Department of Parks website, is a jointly operated playground between the Department of Parks and the Department of Education.

Underhill Playground
Underhill Playground is a 0.59 acre playground on Underhill Avenue at Prospect Place. The amenities include public bathrooms, handball courts, spray showers, as well as jungle gyms and playground equipment. The playground is adjacent to the Academy for Health Careers, a public school.

Prospect Heights Community Farm
This community garden comprises approximately 0.22 acre of land and features numerous plantings, trees, garden plots, seating and storage areas. The GreenThumb community gardening website indicates that the garden is routinely open six days a week.[9]

Lefferts Place Block Association
This small, 0.07-acre community garden includes a variety of trees, plantings, garden plots, storage shed and seating. Per the GreenThumb community gardening website, the garden is open on a regular basis (six days a week).

P.S. 93 (Schoolyards to Playgrounds Site)
This 0.50-acre school playground is located on the southern side of Herkimer Street, just east of New York Avenue and P.S. 93. The colorful schoolyard contains a multi-purpose sports field, running track, a playground and additional recreation areas.

Putnam Triangle
This modest, 0.01 acre park is situated at the northwest intersection of Fulton Street and Grand Avenue. Amenities are limited to seating and a small amount of greenspace and plantings. The triangular-shaped park lies immediately south of a pedestrian plaza located at the western end of Putnam Avenue. This plaza area features additional plantings and a number of tables with umbrellas, effectively expanding the size of this resource.

P.S. 9 (Schoolyards to Playgrounds Site)
This 0.95-acre school playground is located on the northern side of St. Marks Avenue, just west of Underhill Avenue. The colorful schoolyard contains a multi-purpose sports field, running track, a playground and additional recreation areas.

P.S. 56 (Schoolyards to Playgrounds Site)
This 0.80-acre school playground is located on the eastern side of Downing Street between Gates and Putnam Avenues. The schoolyard contains a multi-purpose sports field, running track, a playground and additional recreation areas.

Future No-Action Condition

In the future without the proposed action, the proposed rezoning area is not expected to undergo any changes or development. Similarly, no planned public parks or recreational areas are expected to be added to the study area under the Future No-Action Condition. By the year 2023, it is expected that the population in the surrounding open space area would continue to grow by approximately 0.5 percent a year, representing a standard background growth rate. Thus the approximately 58,759 residents in the study area in 2018 would grow to approximately 59,944 residents by 2023 in the Future No-Action Condition. Therefore, assuming that no additional open space resources are added to the area, the existing OSR of 0.199 acres of open space per 1,000 residents is expected to be reduced to approximately 0.195 acres of open space per 1,000 residents under the Future No-Action Condition.

Future With-Action Condition

Preliminary screening procedures from the *CEQR Technical Manual* indicate that impacts may occur if a project reduces the OSR by more than five percent. In areas that are lacking in open space resources, a

[9] http://www.greenthumbnyc.org/gardensearch.html#map-canvas

reduction as small as one percent may be considered significant. Under the Future With-Action Condition, there would be an increase of up to 455 new residents, thereby increasing the study area population from approximately 59,994 residents under the Future No-Action Condition to 60,463 residents under the Future With-Action Condition. The resulting OSR would decrease from 0.195 acres per 1,000 residents under the Future No-Action Condition to 0.194 acres of open space per 1,000 residents under the Future With-Action Condition, a decrease of less than one percent (0.51 percent). As the reduction in OSR related to the proposed action does not exceed one percent, the proposed action would not result in a significant adverse open space impact, and a detailed analysis is not warranted.

Despite the relatively low existing open space ratio, there is a good mix of passive and active open space resources in the study area. These resources include playgrounds, which are suitable for families and active uses, as well as plazas and triangles, which are great for passive uses such as sitting. It is also important to note that a number of additional open space resources are located immediately adjacent to the 0.5-mile study area, but are not accounted for in the OSR calculations as they lie just outside of the study area. As illustrated in **Figure 2.4-2**, these additional resources, all of which are easily accessible to study area residents, include the 7.79-acre Mount Prospect Park, Grand Army Plaza (14.26 acres), Brooklyn Botanic Garden (52 acres) and Prospect Park. Prospect Park, the flagship park of Brooklyn, contains over 526 acres. Main features of the park include the 90-acre Long Meadow; the Picnic House; Litchfield Villa; Prospect Park Zoo; a large nature conservancy managed by the Wildlife Conservation Society; the Boathouse, housing a visitors center and the first urban Audubon Center; Brooklyn's only lake, covering 60 acres; and the Prospect Park Bandshell that hosts free outdoor concerts in the summer. The park also has sports facilities, including seven baseball fields in the Long Meadow, the Prospect Park Tennis Center, basketball courts, baseball fields, soccer fields, and the New York Pétanque Club in the Parade Ground.

These nearby additional resources would help to reduce the shortage of open space that is expected to continue in the Future With-Action Condition.

2.5 SHADOWS

The *CEQR Technical Manual* defines a shadow as the condition that results when a building or other built structure blocks the sunlight that would otherwise directly reach a certain area, space or feature. An incremental shadow is the additional or new shadow that a building or other built structure resulting from a proposed project would cast on a sunlight-sensitive resource during the year. The sunlight-sensitive resources of concern are those resources that depend on sunlight or for which direct sunlight is necessary to maintain the resource's usability or architectural integrity, including public open space, architectural resources and natural resources. Shadows can have impacts on publicly accessible open spaces or natural features by adversely affecting their use and important landscaping and vegetation. In general, increases in shadow coverage make parks feel darker and colder, affecting the experience of park patrons. Shadows can also have impacts on historic resources whose features are sunlight-sensitive, such as stained-glass windows, by obscuring the features or details, which make the resources significant.

Shadows also vary according to time of day and season. Shadows cast during the morning and evening, when the sun is low in the sky, are longer, while midday shadows are shorter in length. Shadows in winter, when the sun arcs low across the southern sky, are also longer throughout the day than at corresponding times in spring and fall seasons. In summer, the high arc of the sun casts shorter shadows than at any other time of year, and early and late shadows during the summer are cast towards the south than shadows cast in early and late winter months.

The *CEQR Technical Manual* states that a shadow assessment considers projects that result in new shadows long enough to reach a sunlight-sensitive resource. Therefore, a shadow assessment is warranted only if the project would either result in: (a) new structures (or additions to existing structures including the addition of rooftop mechanical equipment) of 50 feet or more; or, (b) be located adjacent to, or across the street from, a sunlight-sensitive resource. However, a project located adjacent to or across the street from a sunlight-sensitive open space resource (which is not a designated New York City Landmark or listed on the State/National Registers of Historic Places, or eligible for these programs) may not require a detailed shadow assessment if the project's height increase is ten feet or less.

As noted above, sunlight-sensitive resources of concern are those resources that depend on sunlight or for which direct sunlight is necessary to maintain the resource's usability or integrity. In general, shadows on city streets and sidewalks or on other buildings are not considered significant. Some open spaces also contain facilities that are not sensitive to sunlight. These are usually paved such as handball or basketball courts, contain no seating areas and no vegetation, no unusual or historic plantings, or contain only unusual or historic plantings that are shade tolerant. These types of facilities do not need to be analyzed for shadow impacts. Additionally, it is generally not necessary to assess resources located to the south of projected development sites, as shadows cast by the action-generated development would not be cast in the direction of these resources. Furthermore, shadows occurring within one and one-half hour of sunrise or sunset generally are not considered significant in accordance with the *CEQR Technical Manual*.

The proposed action would rezone portions of Brooklyn Block 1133 from an M1-1 District to an R7D/C2-4 District, which is expected to result in the redevelopment of the projected and potential development with mixed-use 115-foot-tall buildings. The potential impact of the shadows cast from new development on potentially sensitive resources, such as those described above will be evaluated in the following section.

2.5.1 Preliminary Shadow Screening Assessment

The shadow assessment begins with a preliminary screening assessment to ascertain whether a project's shadow may reach any sunlight-sensitive resources at any time of the year. If the screening assessment does not eliminate this possibility, a detailed shadow analysis may be warranted in order to determine the extent and duration of the net incremental shadow resulting from the project. The effects of shadows on a sunlight-sensitive resource are site-specific; therefore, as directed in the *CEQR Technical Manual*, the screening assessment was performed for the projected and potential development sites to determine whether they fall within the range of maximum possible shadow cast on potential sunlight sensitive resources as described above. In order to determine this, a map was prepared placing NYC Department of Parks Resources as well as Selected Facilities and Program Sites provided on NYC.gov Department of City Planning GIS portal, as well as a list of park and public spaces provided from NYC.gov DOITT GIS and Mapping Portal, as well as a screen of SHPO and NYC Landmark Listed Properties. It was determined that only one community resource, a garden operated by Lefferts Place Block Association could potentially be impacted by a shadow cast from one of the development sites within the study area.

Tier 1 Screening Assessment

The first step in the preliminary shadow screening assessment is a Tier 1 Screening Assessment. A base map is developed that illustrates the projected and potential development sites within the proposed rezoning area in relationship to any sunlight-sensitive resources. The longest shadow study area is then determined, which encompasses the site of the project development sites and a perimeter around the site's boundary with a radius equal to the longest shadow that could be cast by the proposed structure on

December 21st, the winter solstice. To find the longest shadow length, the maximum height of a potential structure (including any rooftop mechanical equipment) is multiplied by the factor of 4.3.

A shadow buffer of 4.3 times the maximum height allowed in the proposed R7D/C2-4 District with MIH bulk bonus or 115 feet was performed, resulting in a shadow radius of 494.5 feet. As shown in **Figure 2.5-1**, the results of the Tier 1 screening assessment show that no open space resources lie within the Tier 1 shadow study area. No other sunlight-sensitive open space or cultural and historic resources are located within the maximum potential shadow radius. Therefore the proposed action does not warrant further shadow studies and would not result in a significant adverse shadow impact.

2.6 HISTORIC AND CULTURAL RESOURCES

An assessment of historic and cultural resources is usually necessary for projects that are located in close proximity to historic or landmark structures or districts, or for projects that require in-ground disturbance, unless such disturbance occurs in an area that has been formerly excavated.

The term “historic resources” defines districts, buildings, structures, sites, and objects of historical, aesthetic, cultural, architectural and archaeological importance. In assessing both historic and cultural resources, the findings of the appropriate city, state, and federal agencies are consulted. Historic resources include: the New York City Landmarks Preservation Commission (LPC)-designated landmarks, interior landmarks, scenic landmarks, and historic districts; locations being considered for landmark status by the LPC; properties/districts listed on, or formally determined eligible for, inclusion on the State and/or National Register (S/NR) of Historic Places; locations recommended by the New York State Board for Listings on the State and/or National Register of Historic Places and National Historic Landmarks.

2.6.1 Architectural Resources

According to *CEQR Technical Manual* guidelines, impacts on historic resources are considered on those sites affected by the proposed action and in the area surrounding identified development sites. The historic resources study area is therefore defined as the proposed rezoning area plus a 400-foot radius around the proposed action area.

No properties within the rezoning area are designated local or S/NR historic resources or properties, nor are they part of any designated historic district.

In order to determine whether the projected development has the potential to affect nearby off-site historic or architectural resources, the study area was screened for historic and architectural resources. No historic or architectural resources were identified within the 400-foot study area. Therefore, no significant adverse impacts on historic or architectural resources are expected as a result of the proposed action, and further assessment is not warranted.

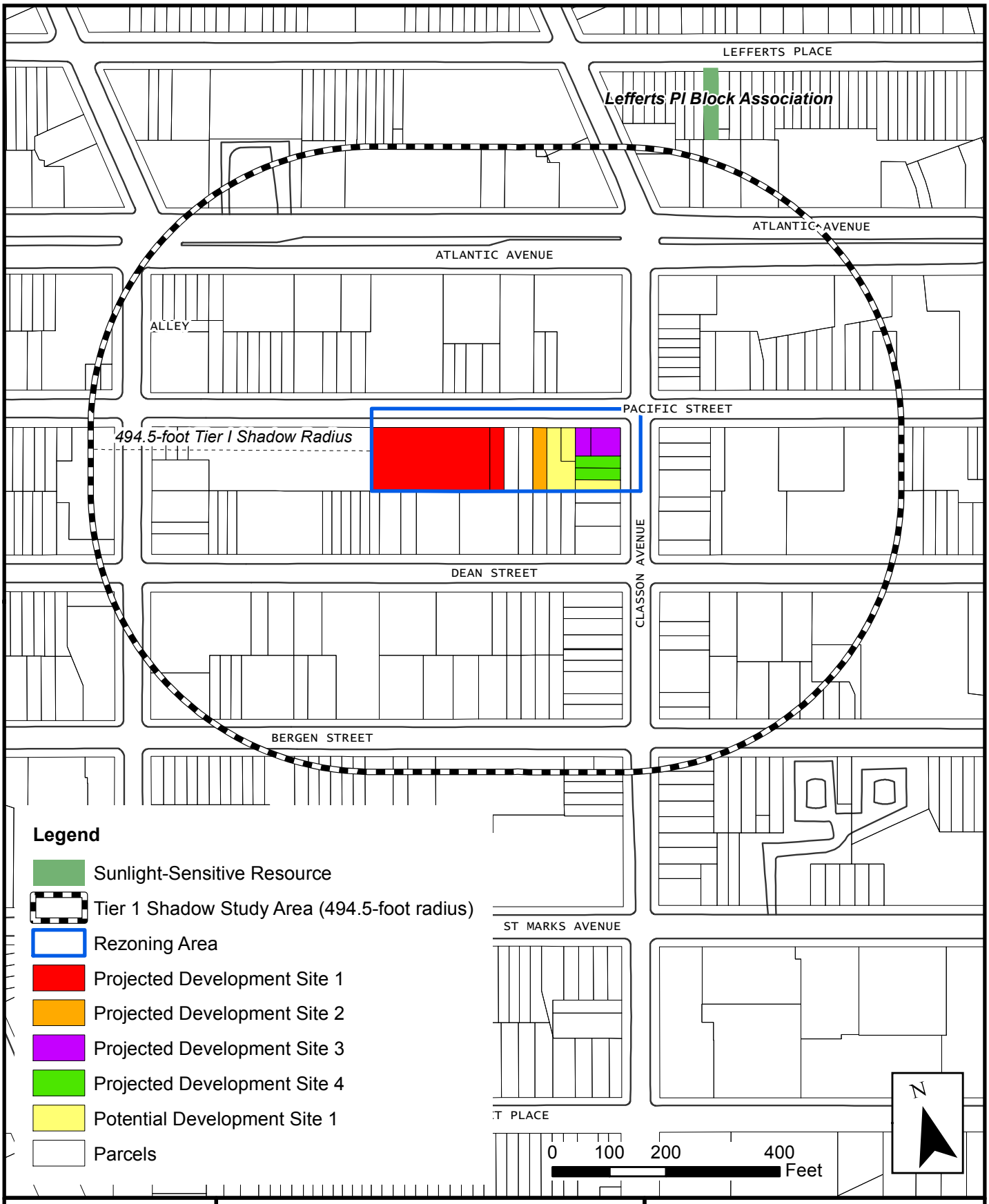

AECOM

Environmental Assessment Statement
1010 Pacific Street Rezoning
Prospect Heights, Brooklyn, NY

Tier 1 Shadow Study

Figure 2.5-1

2.6.2 Archaeological Resources

Unlike the architectural evaluation of a study area that extends beyond the footprint of a project's block and lot lines, the analysis of potential and/or projected impacts to archaeological resources is controlled by the actual footprint of the limits of soil disturbance. Archeological resources are physical remains, usually subsurface, of the prehistoric and historic periods such as burials, foundations, artifacts, wells and privies. The *CEQR Technical Manual* recommends a detailed evaluation of a project's potential effect on the archeological resources if it would potentially result in an in-ground disturbance to an area not previously excavated.

The existing rezoning area has not been recently disturbed and no recent or distant cultural or archaeological significance have been attached to this area. Further, utilizing the NYS Office of Parks, Recreation and Historic Preservation's "Cultural Resource Information System" (CRIS) mapper, the rezoning area does not fall within an archaeologically sensitive area. Based on both current and historic photoreconnaissance of the rezoning area, there is little potential for impact to any known or unknown resource due to development. The LPC was contacted for their initial review of the project's potential to impact on-site or nearby historic and cultural resources, and a response was received on February 18, 2016 (see **Appendix B**). The LPC has indicated that no cultural resource, architectural or archaeological significance is associated with the rezoning area. Therefore, significant adverse impacts to archaeological resources are not expected as a result of the proposed action, and further analysis is not warranted.

2.7 URBAN DESIGN AND VISUAL RESOURCES

According to the *CEQR Technical Manual*, urban design is the totality of components that may affect a pedestrian's experience of public space. Elements that play an important role in the pedestrian's experience include streets, buildings, visual resources, open space, and natural features, as well as wind as it relates to channelization and downwash pressure from tall buildings.

The *CEQR Technical Manual* notes an urban design assessment considers whether and how a project may change the experience of a pedestrian in the study area. The assessment focuses on the components of a proposed project that may have the potential to alter the arrangement, appearance, and functionality of the built environment. In general, an assessment of urban design is needed when the project may have effects on one or more of the elements that contribute to the pedestrian experience (e.g., streets, buildings, visual resources, open space, natural features, wind, etc.). An urban design analysis is not warranted if a proposed project would be constructed within existing zoning envelopes, and would not result in physical changes beyond the bulk and form permitted "as-of-right" with the zoning district.

As the proposed action would result in the construction of a new building that is not allowed "as-of-right" under the existing M1-1 zoning designation, a preliminary analysis was conducted.

2.7.1 Preliminary Analysis

As stated in the *CEQR Technical Manual*, the study area for urban design is the area where the project may influence land use patterns and the built environment, and is generally consistent with the study area used for the land use analysis (i.e., 400 feet around the proposed rezoning area). For visual resources, existing publicly accessible view corridors within the study area should be identified. The purpose of the preliminary assessment is to determine whether any physical changes proposed by a project may raise

the potential to significantly and adversely affect elements of urban design, which would warrant the need for a detailed urban design and visual resources assessment.

Existing Conditions

The 400-foot study area is located in the Prospect Heights North neighborhood of Brooklyn. Refer to **Figure 2.7-1** for an aerial photograph of the study area. Ground-level photographs of Projected Development Site 1 and the immediate surrounding area are provided **Figure 1-4** (refer to **Figure 1-3** for a photograph key map).

As noted in **Chapter 2.1-1**, the study area is characterized by a mix of uses, including general industrial manufacturing uses, warehouses, auto-repair, tenement style multi-family residential apartment buildings, stores, one-story commercial uses, and parking lots. Residences within the area are generally one- to two-family or multi-family buildings with heights averaging between 30 and 40 feet and an FAR around 3.0. Most buildings within the study area are arranged regular (parallel) with respect to their lot placement. Buildings along key corridors and side streets within the area are generally built out to their lot lines, and many of the residential and mixed-use are often attached to one another, as opposed to free-standing detached buildings.

There are few streetscape elements present within the study area. Along Pacific Street, the main street abutting the rezoning area, there are a few scattered trees located along erupted and uneven sidewalks, along with scattered industrially-oriented street lighting. Along Classon Avenue, the street is absent of trees, street amenities or pedestrian-oriented lighting and appears as an industrial access point to the garage entry ways that line the street. No other notable streetscape elements (e.g. benches), lighting, or any form of pocket parks are located within the study area.

The street hierarchy of the study area includes several different functional classifications. Atlantic Avenue is classified as a Principal Arterial Roadway under the Surface Transportation Program, while Dean and Bergen Streets are classified as Major Collector Roadways. To the east of the rezoning site Classon Avenue is a minor collector. All other roadways in the study area are classified as local. No natural features or community features lie within the study area other than the very smallest fringe of Lefferts Street Association Community Garden, which is separated by two blocks and Atlantic Avenue.

Future No-Action Condition

Figures 2.7-2 through **2.7-4** highlight the Future No-Action Condition for the rezoning area. (Refer to **Figure 2.7-1** for view locators that provide a key to the three view locations.) In the future without the proposed rezoning, significant changes to the study area are not expected by the final analysis year of 2023. It is expected that while tenants within area office, retail and other buildings may change, the overall use of these buildings within the study area would remain the same, and any physical changes to buildings in the study area would comply with designated zoning regulations and other surrounding districts. No changes to the area's views to the adjacent parks and open spaces are expected. No significant adverse changes to the area's urban character are anticipated.



AECOM

Environmental Assessment Statement
1010 Pacific Street Rezoning
Prospect Heights, Brooklyn, NY

Urban Design Study Area

Figure 2.7-1



AECOM

Environmental Assessment Statement
1010 Pacific Street Rezoning
Brooklyn, NY

Urban Design
Future No-Action Scenario:
Midblock on Pacific Street, Eastern View

Figure 2.7-2



AECOM

Environmental Assessment Statement
1010 Pacific Street Rezoning
Brooklyn, NY

Urban Design
Future No-Action Scenario:
Midblock on Pacific Street, Western View

Figure 2.7-3



AECOM

Environmental Assessment Statement
1010 Pacific Street Rezoning
Brooklyn, NY

Urban Design
Future No-Action Scenario:
Pacific Street at Classon Avenue, Southern View

Figure 2.7-4

Future With-Action Condition

According to the *CEQR Technical Manual*, if a preliminary assessment determines that changes to the pedestrian environment are sufficiently significant to require greater explanation and further study, then a detailed urban design and visual resources analysis is appropriate. Detailed analyses are generally appropriate for all area-wide rezoning applications that include an increase in permitted floor area or changes in height and setback requirements, general large scale developments, or projects that would result in substantial changes to the built environment of a historic district, or components of an historic building that contribute to the resource's historic significance. Conditions that merit consideration for further analysis of visual resources include when the project partially or totally blocks a view corridor or a natural or built rare or defining visual resource. Further conditions that merit consideration are when the project changes urban design features so that the context of a natural or built visual resource is altered, such as if a project alters the street grid so that the approach to the resource changes, or if a project changes the scale of surrounding buildings so that the context changes.

Figures 2.7-5 through **Figure 2.7-7** highlight the Future With-Action Scenario for the rezoning area (i.e., the projected and potential development sites). (Refer to **Figure 2.7-1** for view locators that provide a key to the three view locations.) These figures use the same vantage point as **Figures 2.7-2** through **2.7-4**, allowing for a comparison between the No-Action and With-Action Scenarios. Under the Future With-Action scenario, the proposed rezoning would amend the zoning map to change the existing M1-1 district to an R7D district with a C2-4 commercial overlay.

Projected Development Site 1, totaling 25,869 square feet, is located on Lots 32 and 42 of Block 1133. This site is presently improved on Lot 32 with a two-story, 40-foot warehouse-style building that covers the entire Lot; while Lot 42, comprising only 2,750 sf of the total development site, remains vacant. The existing FAR for the Lot 32 portion of Projected Development Site 1 is approximately 1.0.

Under the Future With-Action Condition, the proposed rezoning would allow for a development with a base height of 95 feet and a 15-foot setback requirement, a maximum building height of 115 feet, and a maximum FAR of 5.6. The RWCDS assumes 28,456 gsf of commercial floor area (FAR 1.0) and 130,896 gsf of residential floor area (FAR 4.6).

While the proposed building would change views to the site and alter the scale of the existing built fabric as witnessed from pedestrians on Pacific Street, significant negative impacts to pedestrian or visual resources would not occur. Development on the site per the rezoning has the potential to reinforce the street edge and improve pedestrian amenities while enhance the overall quality of the built aesthetic as no aesthetic visual corridors or view sheds from or to the site exist naturally or otherwise under current conditions. The proposed action would not result in any of the above conditions that would merit further detailed assessment of urban design and visual resources. While the proposed action could result in the construction of a new 11-story building, which is not permitted "as-of-right" under the existing M1-1 district (see **Chapter 2.1**), the new building would not be out-of-context with the surrounding buildings within the broader study area. Additional mixed-use residential uses induced from the proposed rezoning would reinforce and enhance the residential quality of the study area, as shown in **Table 2-1.1**, many of the uses in this currently zoned M1-1 zoned area are in fact residential. Although the immediate adjacent residential is low- to mid-rise walk-up style buildings, several other mid- to high-rise buildings are found in the broader study area. In addition, the proposed action would not alter or result in substantial changes to the built environment of a historic district, which are not found within 400 feet of the study area.



AECOM

Environmental Assessment Statement
1010 Pacific Street Rezoning
Brooklyn, NY

Urban Design
Future With-Action Scenario:
Midblock on Pacific Street, Eastern View

Figure 2.7-5



AECOM

Environmental Assessment Statement
1010 Pacific Street Rezoning
Brooklyn, NY

Urban Design
Future With-Action Scenario:
Midblock on Pacific Street, Western View

Figure 2.7-6

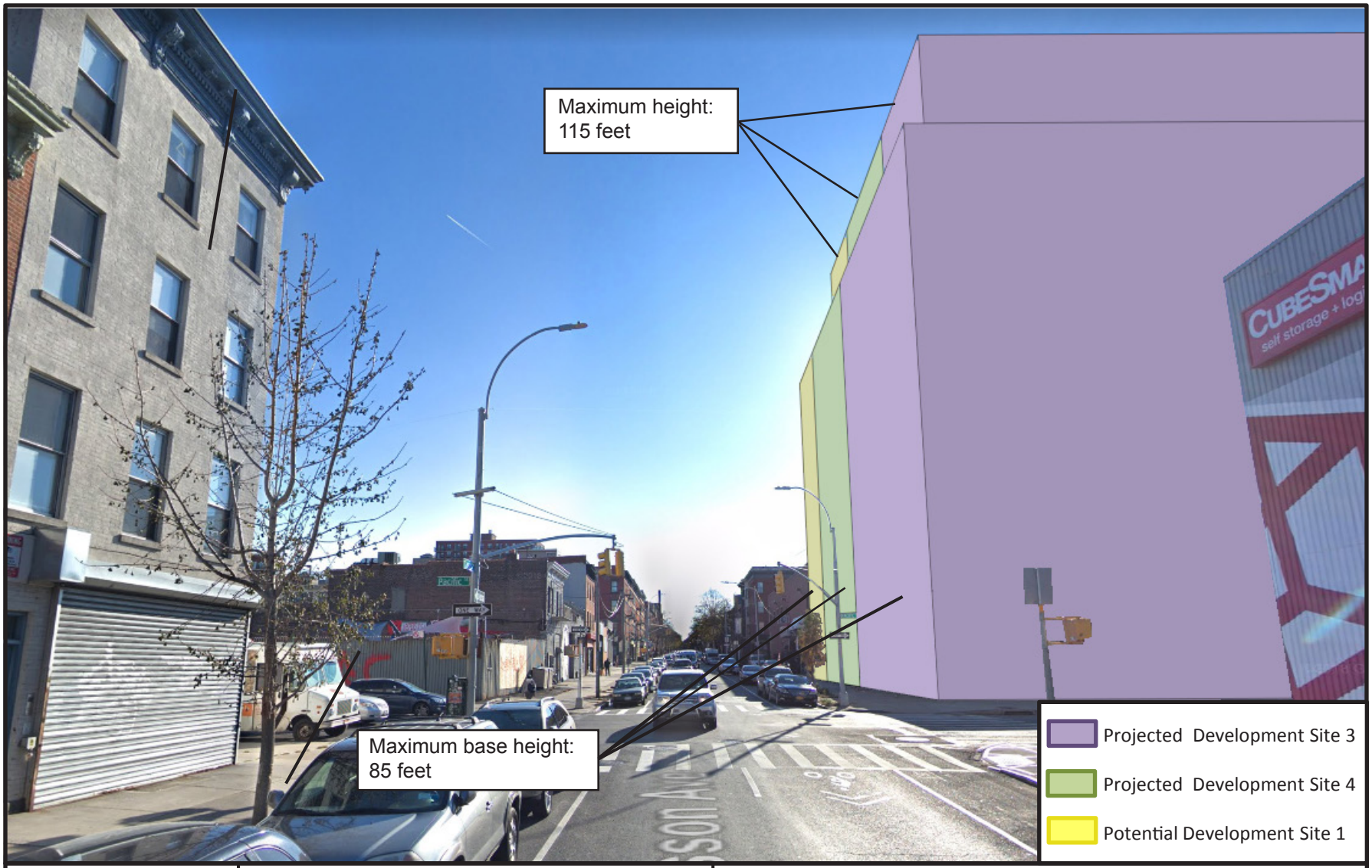

AECOM

Environmental Assessment Statement
1010 Pacific Street Rezoning
Brooklyn, NY

Urban Design
Future With-Action Scenario:
Pacific Street at Classon Avenue, Southern View

Figure 2.7-7

Projected Development Site 2 (Block 1133, Lot 45) is a 2,750 sf lot currently improved with a one-story, approximately 20-foot-high garage and currently has a maximum FAR of 2.4. This site ties Classon Avenue, which is a primarily commercial street, to the interior residential uses of Pacific Street. The Future With-Action RWCDS assumes that this site would be redeveloped with a115-foot-tall, mixed-use building including 13,915 gsf (12,650 zsf) of residential floor area (4.6 FAR) and 2,750 square feet of commercial floor area (1.0 FAR).

Projected Development Site 3 (Block 1133, Lots 48 and 49) is located on a 3,890 square-foot combined lot. It is currently improved with a one story auto supply commercial land use. The site rests on the intersection of Classon Avenue and Pacific Street. It is assumed that this site would be redeveloped as a mixed-use development including 19,683 gsf (17,894 zsf) of residential floor area (4.6 FAR) and 4,279 gsf (3,890 zsf) of commercial floor area (1.0 FAR). It is also assumed that the building would be constructed to the maximum allowable height of 115 feet in an R7D district. The site is ideally suited to anchor a Pacific Street and Classon Avenue reinforcement of residential and community serving commercial uses that is needed for the area.

Projected Development Site 4 (Block 1133, Lots 51 and 52) is situated on 3,260 square-foot combined lot facing Classon Avenue. This site is currently improved with a parking lot on Lot 51 and a two-story single car garage on Lot 52. Neither site offers any distinguishing character to Classon Avenue. It is assumed that the proposed action would result in approximately 16,496 gsf (14,996 zsf) of residential floor area (4.6 FAR) and 3,586 gsf (3,260 zsf) of commercial floor area (1.0 FAR). It is also assumed that the building would rise to a height of 115 feet. Given that the Classon Avenue corridor is currently bare and industrial oriented within the study area and lacks any built continuity or aesthetic, the building height and mass resulting from the projected redevelopment on Classon Avenue, although distinct, would not obstruct or alter any existing pedestrian views or community amenities or adversely impact any existing community character. Improvements to this Pacific Street and Classon Avenue intersection may assist in unifying with the improved street quality experienced north of the Dean Street and Classon Avenue intersection.

Potential Development Site 1 (Block 1133, Lots 46, 47 and 53) is currently improved with a two-story, 1.59 FAR industrial/manufacturing building (Lot 46); a three-story, 1.15 FAR residential building with four dwelling units (Lot 47); and a two-story 1.94 FAR industrial building on the 1,630-sf Lot 53. The proposed action may result in a 115-foot-tall mixed-use building comprised of approximately 36,078 gsf (32,798 zsf) of residential floor area (4.6 FAR) and 7,843 gsf (7,130 zsf) of commercial floor area (1.0 FAR). Much of the building would front on Pacific Street, with a relatively small portion fronting on Classon Avenue. The proposed building would not obstruct or alter any existing pedestrian views or community amenities or adversely impact any existing community character, and is expected to result in an improved streetscape and pedestrian experience.

The proposed action would not diminish or disturb the existing aesthetic continuity, pedestrian features of the community or neighborhood, and as the proposed action would not block any view corridors or views to/from any natural areas with rare or defining features, nor would the proposed action impact an historical or culturally sensitive community features. Therefore the proposed action is not expected to result in any significant adverse urban design or visual resource related impacts.

2.8 HAZARDOUS MATERIALS

A hazardous material is any substance that poses a threat to human health or the environment. Substances that can be of concern include, but are not limited to, heavy metals, volatile and semi-volatile organic compounds (VOCs and SVOCs), methane, polychlorinated biphenyls (PCBs), and hazardous wastes (defined as substances that are chemically reactive, ignitable, corrosive, or toxic). According to the *CEQR Technical Manual*, the potential for significant impacts from hazardous materials can occur when: a) hazardous materials exist on a site; and b) action would increase pathways to their exposure; or c) an action would introduce new activities or processes using hazardous materials.

Projected Development Site 1, which is controlled by the Applicant, is currently improved by an occupied two-story warehouse and a vacant lot. This building would be redeveloped as a result of the proposed action. As the building was previously occupied by industrial uses, a further review of the site's potential for hazardous material contamination was conducted.

2.8.1 Summary of Phase I ESA

In February 2015, a Phase I Environmental Site Assessment was performed at Projected Development Site 1 by Environmental Planning and Management Inc. (see **Appendix D**). The purpose of the ESA is to identify the presence of Recognized Environmental Conditions (RECs) that may be associated with the subject property, as defined by American Society of Testing Engineers (ASTM) E-1527-05. The Phase I ESA was conducted in general accordance with the scope and limitations of the ASTM International Standard E 1527-13, Standard Practice for Environmental Site Assessments: Phase I Environmental Site Assessment Process and the "due diligence" regulations of the Comprehensive Environmental Response, Compensation and Liability Act (CERCLA) and Section 9601 (35)(b) of the Superfund Amendments and Reauthorization Act. At the time of site visit, Affinity Creations, Inc. occupied the site; their activities consisted of manufacturing commercial display hardware such as cabinets, racks, and stands.

Through performance of this ESA, the following Recognized Environmental Conditions (RECs) were identified:

- **Decommissioned Boiler & UST:** During Phase I site inspection on February 5, 2015 a number two fuel oil-burning boiler in the cellar of the subject property was observed located in the northwestern corner of the onsite warehouse footprint. According to the owner of the subject property, the onsite building has been heated using natural gas prior to its most recent purchase in 1994. The owner of the subject property was unaware of the location of any current or former underground or aboveground number two fuel oil storage tank(s) onsite. No indication of tank location was observed during the site visit with the exception of an exterior vent pipe north of the cellar. Fire insurance maps dating from 1951 and 1965 identify a gas tank in the vacant lot to the east of the onsite warehouse approximately 170 feet east of the cellar boiler.

  In the absence of any available records detailing the closure and/or removal of an onsite tank or tanks, location identification via ground-penetrating radar (GPR) survey was recommended.

- **Historic use:** Fire Insurance maps dating from 1926 through 2007 indicated that majority history of the subject property was in use as manufacturing, first for the National Biscuit

Company and later for indeterminate manufacturing. A 1906 fire insurance map depicts a chemical storage structure near the subject property's southeastern corner. A 1926 fire insurance map shows the same structure as a chemical works. City directory records indicate that chemical manufacturing occurred onsite in 1928. City directory records also indicate that automotive repair took place on the subject property in 1934 and 1985. A subsurface investigation was recommended in order to determine if impacts to the subject property from these previous onsite uses have occurred.

- **Off-site impacts:** Fire insurance maps dating from 1926 through 2007 depicted the north adjacent property as a large automotive repair facility improved with several gas tanks. Fire insurance maps dating from 1951 and 1988 through 2007 depicted automotive repair facilities 100 feet east and 50 feet south of the subject property, respectively. These latter two properties were also identified in EDR's Historical Auto Stations Database. Based on the size, use, duration of use, proximity, and/or location topographically upgradient, these properties constitute the potential to adversely impact the subject property. A subsurface investigation was recommended in order to determine if impacts to the subject property from these previous off-site uses have occurred.

Through performance of this Phase I, the following non-REC environmental concerns were identified:

At the time of site reconnaissance, the subject property was improved with fluorescent light fixtures. Prior to any renovation or demolition that may impact them, EPM recommends inspecting these fixtures for the presence of polychlorinated biphenyl (PCB)-containing ballasts.

According to New York City Department of Buildings records reviewed, structures on the subject property were constructed in approximately 1900. Based on the time of original construction, asbestos-containing materials and lead-based paint may be present within structures at the subject property. Prior to any renovation or demolition, which may impact them, asbestos and lead-based paint inspections are recommended to determine the condition, quantity, and location of these materials, and removing them in accordance with federal, state, and local regulations.

2.8.2 Summary of Phase II ESI

In response to the findings of the previous Phase I, a Limited Phase II ESI was conducted by Integral Engineering at the Projected Development Site 1 (see **Appendix D**). A Ground Penetrating Radar (GPR) survey and subsurface soil investigation was performed.

A GPR investigation was performed in February 2015, to clear soil-boring locations and attempt to locate UTRs identified as potentially located on site in the Phase I report. Borings and GPR were performed for the following REC's:

- Cellar (decommissioned boiler, suspected fuel oil tank , floor drains) – SB-1
- Chemical storage/processing on vacant lot – SB-2
- UST search on the vacant lot – SB-3, SB-4, SB-5
- General historic manufacturing use of warehouse – SB-6

No indications of a subsurface tank were identified in the area of the cellar. However GPR identified the location of a potential UST of approximately 10,000 gallons within the vacant lot where potential gasoline and automotive uses were identified as being present in the past in the Phase I ESA.

2.8.2.1 Phase II Subsurface Findings

In March 2015, AARCO Environmental Services Corp. installed six borings to evaluate shallow subsurface soil conditions at the following REC locations: building cellar, warehouse, and vacant lot. Select soil samples were analyzed at a State-certified laboratory for volatile organic compounds (VOCs) and semi-volatile organic compounds (SVOCs), Target Analyte List (TAL) Metals, and Polychlorinated Biphenyls (PCBs).

Historic fill was observed across the Site from 0 – 10 feet bgs. Historic fill is "non-native material, historically deposited on a site to create useable land, which was contaminated prior to placement."

Soil Analytic Results
The results from the soil samples were compared to NYSDEC CP-51 Unrestricted Use Soil Cleanup Objectives (SCOs).

VOCs
No Unrestricted Use SCO's were exceeded for VOCs in the soil samples.

SVOCs
Seven SVOCs were detected above Unrestricted Use SC0s in the shallow soil samples (5-10 Ft) below ground surface (bgs) of two borings SB-4 and SB-5 (near the vacant lot gasoline UST). However, all concentrations were within one order of magnitude of its SCO. Low levels of SVOCs found within these borings could be attributed to placement of historic fill.

Metals
Concentrations of lead, mercury, and nickel exceeded their respective SCOs in three (3) borings on the vacant lot. Similarly to SVOC's these low levels of metals could be attributed to the placement of historic fill.

PCBs
No PCBs were detected in any samples.

2.8.3 Conclusions

The constituents detected in the subsurface were indicative of historic fill found in this area and possibly the presence of a limited petroleum release near the formerly utilized gasoline tank on the vacant lot. There was no evidence from the site investigation that a widespread spill had occurred.

As indicated in the Phase II, for commercial uses, it is unlikely that the observed concentrations would trigger remediation, as only one SVOC exceeds its commercial restricted use SCO, with the exception of the closure of the vacant lot UST. As the Applicant is committed to following any necessary remediation procedures per all applicable local, state, and federal procedures, the proposed action would not result in any significant adverse impacts with respect to hazardous materials.

As noted in a letter from the New York City Department of Environmental Protection (DEP) dated April 5, 2016, DEP has reviewed the Phase I ESA and the Limited Phase II ESI. Based on the historical on-site and/or surrounding area land uses, DEP has determined that a Phase II Environmental Site Assessment (ESA) is necessary to adequately identify/characterize the surface and subsurface soils of Projected Development Site 1 (Applicant-controlled). Phase II Investigative Protocol/Work Plan summarizing the proposed drilling, soil, groundwater, and soil vapor sampling activities should be developed in accordance with the *CEQR Technical Manual* and submitted to DEP for review and approval. The Work Plan should include blueprints and/or site plans displaying the current surface grade and sub-grade elevations and a site map depicting the proposed soil, groundwater, and soil vapor sampling locations. Soil and groundwater samples should be collected and analyzed by a New York State Department of Health (NYSDOH) Environmental Laboratory Approval Program (ELAP) certified laboratory for the presence of volatile organic compounds (VOCs) by United States Environmental Protection Agency (EPA) Method 8260, semi-volatile organic compounds by EPA Method 8270, pesticides by EPA Method 8081, polychlorinated biphenyls by EPA Method 8082, and Target Analyte List metals (filtered and unfiltered for groundwater samples). The soil vapor sampling should be conducted in accordance with NYSDOH's October 2006 Guidance for Evaluating Soil Vapor Intrusion in the State of New York. The soil vapor samples should be collected and analyzed by a NYSDOH ELAP certified laboratory for the presence of VOCs by EPA Method TO-15. An Investigative Health and Safety Plan (HASP) should also be submitted to DEP for review and approval. The Phase II Work Plan and HASP should be submitted to DEP for review and approval prior to the start of any fieldwork.

2.8.4 (E) Designations

To avoid any potential impacts associated with hazardous materials, and in accordance DEP correspondence (April 5, 2016), an (E) designation for hazardous materials will be placed on Projected Development Sites 2, 3 and 4, and Potential Development Site 1, which are not under control of the Applicant. The following parcels that will receive (E) designations: Block 1133, Lots 45, 46, 47, 48, 49, 51, 52 and 53.

The (E) designation text related to hazardous materials is as follows:

> Task 1 – Sampling Protocol
> The applicant submits to OER, for review and approval, a Phase 1 of the site along with a soil and groundwater testing protocol, including a description of methods and a site map with all sampling locations clearly and precisely represented.
>
> If site sampling is necessary, no sampling should begin until written approval of a protocol is received from OER. The number and location of sample sites should be selected to adequately characterize the site, the specific source of suspected contamination (i.e., petroleum based contamination and non-petroleum based contamination), and the remainder of the site's condition. The characterization should be complete enough to determine what remediation strategy (if any) is necessary after review of sampling data. Guidelines and criteria for selecting sampling locations and collecting samples are provided by OER upon request.
>
> Task 2 – Remediation Determination and Protocol
> A written report with findings and a summary of the data must be submitted to OER after completion of the testing phase and laboratory analysis for review and approval. After receiving such results, a determination is made by OER if the results indicate that

remediation is necessary. If OER determines that no remediation is necessary, written notice shall be given by OER.

If remediation is indicated from the test results, a proposed remediation plan must be submitted to OER for review and approval. The applicant must complete such remediation as determined necessary by OER. The applicant should then provide proper documentation that the work has been satisfactorily completed.

An OER-approved construction-related health and safety plan would be implemented during evacuation and construction and activities to protect workers and the community from potentially significant adverse impacts associated with contaminated soil and/or groundwater. This plan would be submitted to OER for review and approval prior to implementation.

All demolition or rehabilitation would be conducted in accordance with applicable requirements for disturbance, handling and disposal of suspect lead-paint and asbestos-containing materials. For all projected and potential development sites where no E-designation is recommended, in addition to the requirements for lead-based paint and asbestos, requirements (including those of NYSDEC) should petroleum tanks and/or spills be identified and for off-site disposal of soil/fill would need to be followed.

With these (E) designations in place, significant adverse impacts related to hazardous materials are not expected, and no further analysis is warranted. Therefore, the proposed actions would not result in significant adverse impacts related to hazardous materials.

2.9 TRANSPORTATION

2.9.1 Introduction

This section assesses the potential for transportation impacts as a result of the proposed action. The proposed action involves the granting of a zoning map amendment on Brooklyn Block 1133 to allow development to occur on multiple sites comprised of Lots 32, 42, 45, 48, 49, 51 and 52. Block 1133 is bounded by Pacific Street to the north, Dean Street to the south, Classon Avenue to the east, and Grand Avenue to the west, as shown in **Appendix C** (please see **Appendix C** for all transportation figures). As discussed above in Section 1.5, the RWCDS for the proposed action assumes a net increase of approximately 213 dwelling units (180,990 gsf), a net increase of 35,456 gsf of local retail space, and a net decrease of 25,930 gsf of industrial/ manufacturing space by the 2023 build year. The nearby 1050 proposed rezoning was also considered. The incremental vehicular, transit and pedestrian volumes associated with this project are below the preliminary screening thresholds identified in *CEQR Technical Manual* and are therefore included in these analyses as background growth.

2.9.2 Transportation Screening

According to the *CEQR Technical Manual*, interrelationships between the key technical areas of the transportation system – traffic, transit, pedestrians, and parking – should be taken into account in any assessment. Furthermore, the individual technical areas should be separately assessed to determine whether a project has the potential to adversely and significantly affect a specific area of the transportation system. The *CEQR Technical Manual* states that a preliminary trip generation assessment should be prepared to determine whether a quantified analysis of any technical areas of the transportation system is necessary. Except in unusual circumstances, a further quantified analysis would

typically not be needed for a technical area if the proposed action would result in fewer than the following increments, based on a Level 1 screening assessment:

- 50 peak hour vehicle trips;
- 200 peak hour subway/rail or bus transit riders; or
- 200 peak hour pedestrian trips.

The *CEQR Technical Manual* also states that if the threshold for traffic is not surpassed, it is likely that further parking assessment is also not needed.

If the Level 1 trip generation thresholds identified above are exceeded, a Level 2 screening assessment is then conducted. The *CEQR Technical Manual* states that, based on the Level 2 screening assessment:

- Intersections with fewer than 50 vehicle trips during the analysis peak hour may likely be screened out, and no further analysis would be needed for those intersections;

- Bus routes with fewer than 50 bus passengers assigned to a single bus line (in one direction) would likely be screened out;

- Subway stations or subway lines with fewer than 200 passengers would likely be screened out; and

- Projected pedestrian volume increases of fewer than 200 pedestrians per hour at any sidewalk, crosswalk, or intersection corner would not typically be considered a significant impact and would not require a detailed analysis because that level of increase would not generally be perceptible.

In order to determine the change in trip generation associated with the proposed action, trip generation estimates were prepared for each of the land uses proposed as part of the action. **Table 2.9.1** shows the estimated person-trips for the proposed action, as well as the associated transportation planning assumptions, whereas **Table 2.9-3** shows the estimated vehicle-trips for the proposed action and the projected mode splits. **Table 2.9-3** shows the corresponding person-trip estimates for the subway, bus and walk modes under the proposed action. **Tables 2.9.1 through 2.9-3** show the addition of trips associated with the residential and commercial land uses (positive trips), as well as the elimination of trips associated with the site's existing industrial land use (negative trips).

As shown in **Table 2.9-2**, the proposed action is projected to generate fewer than 50 peak hour vehicle-trips during each of the four peak hours. Therefore, consistent with the guidelines published in the *2014 CEQR Technical Manual,* the proposed action is not projected to result in any significant adverse traffic impacts and no detailed assessment of the potential for traffic-related impacts as a result of the proposed action is warranted.

As shown in **Table 2.9-3**, the proposed action is projected to generate fewer than 200 peak hour subway trips and bus trips during each of the four peak hours. Therefore, consistent with the guidelines published in the *2014 CEQR Technical Manual,* the proposed action is not projected to result in any significant adverse transit impacts and no detailed assessment of the potential for transit-related impacts as a result of the proposed action is warranted.

Table 2.9-1 Estimated Person-Trip Generation and Transportation Planning Assumptions

Land Use	Size	Weekday Daily Person-Trip Rate	Saturday Daily Person-Trip Rate	Temporal Distribution (%)				Estimated Person-Trips			
				Weekday AM	Weekday MD	Weekday PM	Saturday MD	Weekday AM	Weekday MD	Weekday PM	Saturday MD
Residential	213	8.075 trips per DU	9.6 trips per DU	10.0%	5.0%	11.0%	8.0%	172	86	189	164
Local Retail	35,456	205 trips per 1,000 sq. ft.	240 trips per 1,000 sq. ft.	3.0%	19.0%	10.0%	10.0%	218	1,381	727	851
Light Industrial (trip credit for existing land use to be replaced)	-25,930	14.7 trips per 1,000 sq. ft.	2.2 trips per 1,000 sq. ft.	13.2%	11.0%	14.2%	10.7%	-50	-42	-54	-6
						TOTAL PERSON-TRIPS =		340	1,425	862	1,008

Residential trip rates and temporal distributions based on Residential (3 or more floors) from *CEQR Technical Manual* (Table 16-2).
Local Retail trip rates and temporal distributions based on Local Retail from CEQR Technical Manual (Table 16-2).
Light Industrial trip rates and temporal distributions based on Light Industrial land use from *East New York Rezoning EIS*.
All trip values rounded to the nearest one (1) trip.

Table 2.9-2 Estimated Vehicle-Trip Generation and Mode Splits

Land Use	Size	Estimated Mode Split (Weekday AM and PM)							Estimated Mode Split (Weekday Midday and Saturday Midday)							Estimated Vehicle-Trips											
																Weekday AM			Weekday MD			Weekday PM			Saturday MD		
		Auto	Taxi	Sub-way	Rail-road	Bus	Walk	Total	Auto	Taxi	Sub-way	Rail-road	Bus	Walk	Total	Total	In	Out	Total	In	Out	Total	In	Out	Total	In	Out
Residential	213	9.5%	1.7%	74.3%	1.2%	3.8%	9.5%	100.0%	9.5%	1.7%	74.3%	1.2%	3.8%	9.5%	100.0%	21	5	16	11	5	5	21	14	7	18	10	8
Local Retail	35,456	2.0%	3.0%	4.0%	0.0%	6.0%	85.0%	100.0%	2.0%	3.0%	4.0%	0.0%	6.0%	85.0%	100.0%	10	5	5	57	28	28	29	15	15	34	17	17
Pass-by trip reduction =																*-2*	*-1*	*-1*	*-14*	*-7*	*-7*	*-7*	*-4*	*-4*	*-9*	*-4*	*-4*
Net New Trips =																7	3	3	41	21	21	22	11	11	26	13	13
Light Industrial (trip credit for existing land use to be replaced)	-25,930	38.0%	0.0%	31.0%	0.0%	17.0%	14.0%	100.0%	2.0%	3.0%	4.0%	0.0%	6.0%	85.0%	100.0%	-20	-16	-3	-4	-2	-2	-19	-2	-16	0	0	0
TOTAL =																7	-9	16	48	24	24	24	22	2	43	23	20

Residential mode split and auto occupancy (1.12) based on census journey-to-work data for tracts 201, 203, 205, 215, 217,219, 221, 227 and 305. Taxi occupancy assumed to be 1.3.
Local Retail mode split and auto/taxi occupancies based on typical NYCDOT and NYCDCP assumptions.
Light Industrial mode split for AM and PM and auto occupancy (1.11) based on reverse-journey-to-work data for census tracts 201, 203, 205, 215, 217, 219, 221, 227 and 305.
Light Industrial mode split for MD and SAT based on typical NYCDOT assumptions for Local Retail.
Linked-Trip / Pass-by Trip Reduction credit for Local Retail assumed to be 25% as per *CEQR Technical Manual*.
Residential and Local Retail truck trip generation rates and temporal distributions as per *CEQR Technical Manual*.
Light Industrial truck trip generation rates and temporal distributions as per *East New York Rezoning*.
All trip values rounded to the nearest one (1) trip.

Table 2.9-3 Estimated Trip Generation for Subway, Bus and Walk Modes

Land Use	Weekday AM									Weekday Midday								
	Subway			Bus			Walk			Subway			Bus			Walk		
	Total	In	Out	Total	In	Out	Total	In	Out	Total	In	Out	Total	In	Out	Total	In	Out
Residential	128	26	102	7	1	5	16	3	13	64	33	31	3	2	2	8	4	4
Local Retail	9	4	4	13	7	7	185	93	93	55	28	28	83	41	41	1,174	587	587
Light Industrial (trip credit for existing land use to be replaced)	-16	-14	-2	-9	-8	-1	-7	-6	-1	-2	-1	-1	-3	-1	-1	-36	-18	-18
TOTAL =	**121**	**16**	**105**	**11**	**0**	**11**	**195**	**90**	**105**	**117**	**59**	**58**	**84**	**42**	**42**	**1,146**	**573**	**573**

Total AM Ped Trips = 327 **Total Midday Ped Trips = 1,348**

All trip values rounded to the nearest one (1) trip.

Land Use	Weekday PM									Saturday Midday								
	Subway			Bus			Walk			Subway			Bus			Walk		
	Total	In	Out	Total	In	Out	Total	In	Out	Total	In	Out	Total	In	Out	Total	In	Out
Residential	141	91	49	7	5	3	18	12	6	122	69	52	6	4	3	16	9	7
Local Retail	29	15	15	44	22	22	618	309	309	34	17	17	51	26	26	723	362	362
Light Industrial (trip credit for existing land use to be replaced)	-17	-2	-15	-9	-1	-8	-8	-1	-7	0	0	0	0	0	0	-5	-2	-3
TOTAL =	**153**	**104**	**49**	**42**	**25**	**16**	**628**	**320**	**309**	**155**	**86**	**69**	**57**	**29**	**28**	**734**	**368**	**366**

Total PM Ped Trips = 823 **Total SAT Ped Trips = 946**

As **Table 2.9-3** shows, the proposed action is projected to generate over 200 total peak hour pedestrian trips (i.e., the combined total of subway, bus, and walk trips) during all four peak hours. Following a spatial assignment of pedestrian trips to the sidewalks, crosswalks, and intersection corners proximate to the rezoning sites under a Level 2 screening assessment, there would likely be no more than 200 person-trips on any one pedestrian element during the weekday AM peak hour. The 200-trip threshold would likely be exceeded during the weekday midday, weekday PM, and Saturday midday peak hours. Therefore, pedestrian analyses are warranted for the weekday midday, weekday PM, and Saturday midday peak hours under existing conditions, Future No-Action conditions, and Future With-Action conditions.

2.9.3 Pedestrian Analysis

2.9.3.1 Existing Pedestrian Conditions

Study Intersections and Data Collection

Two study intersections, Grand Avenue/Pacific Street and Classon Avenue/Pacific Street, were selected for analysis based on *CEQR Technical Manual* criteria (see **Figure C-1**). Both of these intersections are located in the vicinity of the proposed rezoning sites, and were identified as study intersections based on their potential to experience changes in pedestrian operations as a result of the proposed action.

Field counts of pedestrian volumes at all sidewalks, crosswalks, and corners at both of the study intersections were conducted in January and February 2016 during the weekday midday, weekday PM, and Saturday midday peak periods, and are shown in **Figures C-2, C-3 and C-4**, respectively. Counts of the volumes of vehicles making conflicting turning movements through each of the crosswalks were also obtained from the count data. The physical characteristics of all pedestrian elements at each study intersection were inventoried in the field. This inventory specifically included:

- Crosswalk locations, types (standard crosswalks or high-visibility crosswalks), widths, and lengths;
- Sidewalk locations and widths;
- Curb return radii; and
- Locations and dimensions of street appurtenances along the sidewalks and on corners (which constitute obstacles to the unimpeded flow of pedestrians).

The official traffic signal timing plan for the Classon Avenue/Pacific Street intersection was obtained from the New York City Department of Transportation (NYCDOT) and used in the analysis.

Based on the observed pedestrian volumes, crosswalk, sidewalk, and street corner LOS analyses were conducted at the signalized intersection of Classon Avenue/Pacific Street. At the stop-controlled intersection of Grand Avenue/Pacific Street, only the crosswalk and sidewalk LOS analyses were conducted, because pedestrians always have the right-of-way when crossing stop-controlled approaches, resulting in no pedestrian delays on street corners. All pedestrian LOS analyses were conducted for the weekday midday (12:30 to 1:30 PM), weekday PM (4:45 to 5:45 PM), and Saturday midday (1:00 to 2:00 PM) peak hours for pedestrian activity under existing conditions, Future No-Action conditions, and Future With-Action conditions.

Analysis Methodology

The analysis of pedestrian flow involves quantifying the comfort level for pedestrians walking along the sidewalks, waiting to cross the street at intersection corners, and crossing intersection crosswalks. The LOS is calculated using the physical and operational parameters at the intersection including the pedestrian flow rates, the lengths and widths (i.e., area) of the crosswalks, the effective widths of the sidewalks, the area of each street corner, conflicting vehicular traffic volumes that turn through the crosswalk, and the signal timing at the intersection. Crosswalk, street corner, and sidewalk operations were analyzed using the methodologies described in the *CEQR Technical Manual* and were conducted using NYCDOT's pedestrian analysis Excel spreadsheet.

The crosswalk and street corner LOS methodologies are based on pedestrian density, as expressed in units of "square feet of space per pedestrian" (square feet/ped), during the peak 15-minute period of the peak hour. A pedestrian walking speed of 3.0 feet/second is indicated on NYCDOT's official traffic signal timing sheet for the Classon Avenue/Pacific Street intersection and was used in the analysis. The LOS ranges for crosswalks and street corners are as shown below in **Table 2.9-4.**

Table 2.9-4 LOS Criteria for Crosswalks and Street Corners

LOS	Square Feet of Space per Pedestrian (feet^2/ped)
A	> 60
B	> 40 to 60
C	> 24 to 40
D	> 15 to 24
E	> 8 to 15
F	≤ 8

Source: Adapted from March 2014 *CEQR Technical Manual*, Table 16-10, page 16-48.

The LOS methodology for sidewalks is also based on pedestrian density, as expressed in units of "square feet of space per pedestrian" (feet^2/ped), during the peak 15-minute period of the peak hour. The LOS ranges for sidewalks under platoon flow conditions are as shown below in **Table 2.9-5.**

Table 2.9-5 LOS Criteria for Sidewalks under Platoon Flow Conditions

LOS	Square Feet of Space per Pedestrian (feet^2/ped)
A	> 530
B	> 90 to 530
C	> 40 to 90
D	> 23 to 40
E	> 11 to 23
F	≤ 11

Source: Adapted from March 2014 *CEQR Technical Manual*, Table 16-9, page 16-47.

Existing Levels-of-Service

The pedestrian LOS analyses for existing conditions are based on peak 15-minute pedestrian flows observed during the weekday midday, weekday PM, and Saturday midday peak hours. **Tables 2.9-6 through 2.9-8** summarize the results of the existing conditions pedestrian LOS analyses for crosswalks, street corners, and sidewalks, respectively. As shown in **Tables 2.9-6 through 2.9-8,** all crosswalks, street corners, and sidewalks currently operate at LOS "A" during the weekday midday, midday PM, and Saturday midday peak hours. These conditions reflect the relatively low pedestrian volumes that currently exist at these two intersections and the relative freedom of movement that pedestrian experience when walking at both locations.

2.9.3.2 Future No-Action Pedestrian Conditions

Pedestrian activity in the study area was projected for the Future No-Action condition and the Future With-Action condition. The projected future pedestrian growth is a combination of background growth in pedestrian activity that is expected throughout the study area (i.e., a compounded growth rate of 3.55 percent between 2016 and 2023 for "Other Brooklyn," as per the *CEQR Technical Manual*), and pedestrian volumes generated through the study intersections by other specific planned development projects expected to be in place by the 2023 build year.

Based on discussions with the NYCDOT Traffic Planning staff and NYCDCP staff, there are no known development projects of significant size and proximity to the project study intersections that warrant an increase in background pedestrian volumes beyond that associated with the aforementioned growth factor. The *Atlantic Yards Arena and Redevelopment Project FSEIS*, dated June 2014, was consulted to identify the potential for future increases in pedestrian and traffic volumes associated with that project at the two study intersections (which are located two blocks east of the easterly boundary of Atlantic Yards' Phase II development sites). However, the incremental pedestrian volumes presented in the FSEIS for Pacific Street to the east (towards the projected development sites) were found to be fewer than 10 pedestrian movements per hour, and there were no incremental traffic volumes assigned through the two study intersections during any of the peak hours analyzed.

Therefore, to arrive at the total Future No-Action condition pedestrian volumes for the weekday midday, weekday PM, and Saturday midday peak hours—shown in **Figures C-5, C-6, and C-7**—the existing baseline pedestrian volumes were increased by the 3.55 percent growth rate, to reflect future pedestrian growth from 2016 to the future analysis year of 2023. In addition, the conflicting traffic volumes were also increased by 3.55 percent to reflect background vehicular traffic growth between 2016 and 2023.

Future No-Action Levels-of-Service

The crosswalk, corner, and sidewalk LOS analyses at the two study intersections were then repeated using the projected Future No-Action condition pedestrian volumes. **Tables 2.9-9, 2.9-10 and 2.9-11** summarize the results of the Future No-Action conditions pedestrian LOS analyses for crosswalks, corners, and sidewalks, respectively. As shown in **Tables 2.9-9 through 2.9-11**, all crosswalks, corners and sidewalks are projected to continue to operate at LOS "A" during the weekday midday, weekday PM, and Saturday midday peak hours.

Table 2.9-6 Year 2016 Existing Conditions Pedestrian Crosswalk Analyses

Intersection	Peak Hour	Crosswalk	Crosswalk Length (Feet - approx.)	Crosswalk Width (Feet - approx.)	Pedestrian Operations	
					feet^2/ped	LOS
Classon Avenue/ Pacific Street	Weekday Midday	North	33.9	12.3	835.9	A
		East	33.3	12.6	702.5	A
		South	33.6	13.2	2454.7	A
		West	33.3	12.5	935.0	A
	Weekday PM	North	33.9	12.3	2228.2	A
		East	33.3	12.6	454.2	A
		South	33.6	13.2	2454.7	A
		West	33.3	12.5	742.7	A
	Saturday Midday	North	33.9	12.3	936.1	A
		East	33.3	12.6	403.7	A
		South	33.6	13.2	923.3	A
		West	33.3	12.5	860.6	A
Grand Avenue/ Pacific Street	Weekday Midday	North	33.8	14.7	5393.3	A
		East	33.7	13.7	2745.9	A
		South	33.8	12.4	6882.9	A
		West	33.6	14.4	5323.7	A
	Weekday PM	North	33.8	14.7	6331.1	A
		East	33.7	13.7	3020.0	A
		South	33.8	12.4	4475.5	A
		West	33.6	14.4	2440.1	A
	Saturday Midday	North	33.8	14.7	4624.6	A
		East	33.7	13.7	2337.5	A
		South	33.8	12.4	5486.9	A
		West	33.6	14.4	6389.8	A

Table 2.9-7 Year 2016 Existing Conditions Pedestrian Corner Analyses

Intersection	Peak Hour	Corner	Pedestrian Operations	
			feet^2/ped	LOS
Classon Avenue/ Pacific Street	Weekday Midday	Northwest	2817.0	A
		Northeast	2323.2	A
		Southwest	3669.2	A
		Southeast	2997.4	A
	Weekday PM	Northwest	2971.8	A
		Northeast	2152.4	A
		Southwest	2401.1	A
		Southeast	2046.1	A
	Saturday Midday	Northwest	2953.7	A
		Northeast	1674.4	A
		Southwest	2836.9	A
		Southeast	1829.2	A

Table 2.9-8 Year 2016 Existing Conditions Pedestrian Sidewalk Analyses

Intersection	Peak Hour	Corner	Sidewalk	Pedestrian Operations	
				feet^2/ped	LOS
Classon Avenue/ Pacific Street	Weekday Midday	NE	N-S	1929.1	A
			E-W	7711.2	A
		SE	N-S	2717.1	A
			E-W	5065.2	A
		SW	N-S	2484.0	A
			E-W	3092.2	A
		NW	N-S	3285.0	A
			E-W	2154.6	A
	Weekday PM	NE	N-S	1636.4	A
			E-W	7606.3	A
		SE	N-S	1713.2	A
			E-W	5115.9	A
		SW	N-S	1545.2	A
			E-W	1789.7	A
		NW	N-S	2637.2	A
			E-W	2432.0	A
	Saturday Midday	NE	N-S	1305.0	A
			E-W	5770.3	A
		SE	N-S	1662.2	A
			E-W	11306.2	A
		SW	N-S	2160.0	A
			E-W	3072.0	A
		NW	N-S	3013.0	A
			E-W	1710.0	A
Grand Avenue/ Pacific Street	Weekday Midday	NE	N-S	1940.4	A
			E-W	4057.3	A
		SE	N-S	2618.7	A
			E-W	4500.0	A
		SW	N-S	5475.0	A
			E-W	2565.0	A
		NW	N-S	4664.7	A
			E-W	4734.9	A
	Weekday PM	NE	N-S	2464.0	A
			E-W	4446.4	A
		SE	N-S	2630.8	A
			E-W	2800.0	A
		SW	N-S	2731.7	A
			E-W	1824.0	A
		NW	N-S	2724.1	A
			E-W	4116.0	A
	Saturday Midday	NE	N-S	2320.7	A
			E-W	3087.7	A
		SE	N-S	2442.8	A
			E-W	3195.0	A
		SW	N-S	2530.7	A
			E-W	1294.7	A
		NW	N-S	4139.1	A
			E-W	3704.4	A

Table 2.9-9 Year 2023 No-Action Conditions Pedestrian Crosswalk Analyses

Intersection	Peak Hour	Crosswalk	Crosswalk Length (Feet - approx.)	Crosswalk Width (Feet - approx.)	Pedestrian Operations	
					feet^2/ped	LOS
Classon Avenue/ Pacific Street	Weekday Midday	North	33.9	12.3	834.9	A
		East	33.3	12.6	673.4	A
		South	33.6	13.2	2454.7	A
		West	33.3	12.5	910.0	A
	Weekday PM	North	33.9	12.3	2225.4	A
		East	33.3	12.6	433.7	A
		South	33.6	13.2	2454.7	A
		West	33.3	12.5	707.9	A
	Saturday Midday	North	33.9	12.3	934.9	A
		East	33.3	12.6	389.5	A
		South	33.6	13.2	923.3	A
		West	33.3	12.5	823.2	A
Grand Avenue/ Pacific Street	Weekday Midday	North	33.8	14.7	5391.6	A
		East	33.7	13.7	2639.3	A
		South	33.8	12.4	6880.7	A
		West	33.6	14.4	5323.7	A
	Weekday PM	North	33.8	14.7	6325.0	A
		East	33.7	13.7	2932.8	A
		South	33.8	12.4	4472.6	A
		West	33.6	14.4	2323.2	A
	Saturday Midday	North	33.8	14.7	4623.1	A
		East	33.7	13.7	2217.8	A
		South	33.8	12.4	5485.1	A
		West	33.6	14.4	6387.8	A

Table 2.9-10 Year 2023 No-Action Conditions Pedestrian Corner Analyses

Intersection	Peak Hour	Corner	Pedestrian Operations	
			feet^2/ped	LOS
Classon Avenue/ Pacific Street	Weekday Midday	Northwest	2778.8	A
		Northeast	2267.0	A
		Southwest	3605.3	A
		Southeast	2912.0	A
	Weekday PM	Northwest	2877.3	A
		Northeast	2072.4	A
		Southwest	2293.6	A
		Southeast	1979.1	A
	Saturday Midday	Northwest	2878.9	A
		Northeast	1631.8	A
		Southwest	2768.2	A
		Southeast	1782.6	A

Table 2.9-11 Year 2023 No-Action Conditions Pedestrian Sidewalk Analyses

Intersection	Peak Hour	Corner	Sidewalk	Pedestrian Operations	
				feet^2/ped	LOS
Classon Avenue/ Pacific Street	Weekday Midday	NE	N-S	1848.7	A
			E-W	7711.2	A
		SE	N-S	2626.5	A
			E-W	5065.2	A
		SW	N-S	2353.3	A
			E-W	3092.2	A
		NW	N-S	3193.7	A
			E-W	2154.6	A
	Weekday PM	NE	N-S	1586.1	A
			E-W	7606.3	A
		SE	N-S	1650.5	A
			E-W	5015.9	A
		SW	N-S	1488.0	A
			E-W	1728.0	A
		NW	N-S	2520.0	A
			E-W	2432.0	A
	Saturday Midday	NE	N-S	1260.5	A
			E-W	5770.3	A
		SE	N-S	1606.8	A
			E-W	11306.2	A
		SW	N-S	2073.6	A
			E-W	3072.0	A
		NW	N-S	2887.5	A
			E-W	1710.0	A
Grand Avenue/ Pacific Street	Weekday Midday	NE	N-S	1857.8	A
			E-W	3912.4	A
		SE	N-S	2546.0	A
			E-W	4500.0	A
		SW	N-S	5475.0	A
			E-W	2565.0	A
		NW	N-S	4664.7	A
			E-W	4734.9	A
	Weekday PM	NE	N-S	2334.3	A
			E-W	4446.4	A
		SE	N-S	2502.4	A
			E-W	2800.0	A
		SW	N-S	2595.1	A
			E-W	1824.0	A
		NW	N-S	2597.4	A
			E-W	4116.0	A
	Saturday Midday	NE	N-S	2217.6	A
			E-W	2925.2	A
		SE	N-S	2331.8	A
			E-W	3195.0	A
		SW	N-S	2440.3	A
			E-W	1294.7	A
		NW	N-S	4139.1	A
			E-W	3704.4	A

2.9.3.3 Future With-Action Pedestrian Conditions

Trip Generation

To determine the pedestrian levels-of-service with the proposed action, the crosswalk, corner, and sidewalk LOS analyses at all study intersections were repeated to include the projected numbers of the new pedestrians generated by the proposed action, shown previously in **Table 2.9-3**.

As shown in **Table 2.9 -3**, the proposed action is projected to generate approximately:

- 1,348 new pedestrian trips (approximately 117 subway trips, 84 bus trips, and 1,146 walk trips) during the weekday midday peak hour,
- 823 new pedestrian trips (approximately 153 subway trips, 42 bus trips, and 628 walk trips) during the weekday PM peak hour, and
- 946 new pedestrian trips (approximately 155 subway trips, 57 bus trips, and 734 walk trips) during the Saturday midday peak hour.

For purposes of this analysis, all of the pedestrian trips are anticipated to access the rezoning sites via the south side of Pacific Street.

Trip Distribution and Assignments

The trip distribution patterns for pedestrian traveling to and from the proposed sites are different for each mode, as follows:

- For subway trips, it was assumed that 100 percent of all subway trips will travel to/from the Franklin Avenue subway station, located northeast of the proposed rezoning area. This station serves the “C” and “S” subway lines.
- For bus trips, it was assumed that 30 percent will use the B48 line along Classon Avenue and Franklin Avenues (to the east of the rezoning area), 35 percent will use the B65 line along Dean Street and Bergen Street (to the south of the rezoning area), and the remaining 35 percent will use the B45 line along Washington Avenue (to the west of the rezoning area).
- Walk trips were assumed to be distributed equally to/from the north, south, east, and west (25 percent in each direction) from projected development sites.

Based on the pedestrian distribution patterns described above for each mode, the projected new pedestrian volumes associated with the proposed action were then estimated for the weekday midday, weekday PM, and Saturday midday peak hours and added to the Future No-Action condition pedestrian volumes to arrive at the total projected Future With-Action condition pedestrian volumes, shown in **Figures C-8, C-9 and C-10**, respectively.

Future With-Action Levels-of-Service

The crosswalk, corner, and sidewalk pedestrian LOS analyses at the study intersections were then repeated using the projected Future With-Action condition pedestrian volumes, and the results are shown in **Tables 2.9-12, 2.9-13 and 2.9-14**. As shown in **Tables 2.9-12 through 2.9-14**, all crosswalks, corners and sidewalks are projected to operate at LOS "C" or better during the weekday midday, weekday PM, and Saturday midday peak hours.

Assessment of Projected Pedestrian Impacts

The assessment of projected pedestrian impacts is based in part on whether the pedestrian element being analyzed is part of a Central Business District (CBD) and, for sidewalks, whether the pedestrian flow is platooned or not. This area of Brooklyn is not considered a CBD location. To ensure a conservative analysis, platoon flow conditions were assumed, although it should be recognized that the projected development sites are not located in the immediate vicinity of any subway stations, bus stops, or major pedestrian generators that would result in highly platooned pedestrian flows.

For crosswalks and street corners in non-CBD locations: According to the guidelines established in the *CEQR Technical Manual*, average pedestrian space under the Future With-Action condition deteriorating to LOS "C" or better should generally not be considered a significant impact. If the pedestrian space under the Future With-Action condition deteriorates to LOS "D" or worse (i.e., less than 24.0 square feet/ped), then the determination of whether the impact is considered significant is based on a sliding scale that varies with the Future No-Action pedestrian space.

For sidewalks with platoon flow in non-CBD locations: According to the guidelines established in the *CEQR Technical Manual*, average pedestrian space under the Future With-Action condition deteriorating to LOS "C" or better should generally not be considered a significant impact. If the pedestrian space under the Future With-Action condition deteriorates to LOS "D" or worse (i.e., less than 40.0 square feet/ped), then the determination of whether the impact is considered significant is based on a sliding scale that varies with the Future No-Action pedestrian space.

As shown in **Tables 2.8-12 through 2.8-14**, under the proposed Future With-Action condition, all of the pedestrian elements are projected to operate at LOS "C" or better (as defined in the paragraphs above for crosswalks, corners, and sidewalks). Therefore, the proposed action is not projected to result in a significant impact with respect to pedestrians.

Table 2.9-12 Year 2023 With-Action Conditions Pedestrian Crosswalk Analyses

Intersection	Peak Hour	Crosswalk	Crosswalk Length (Feet - approx.)	Crosswalk Width (Feet - approx.)	Pedestrian Operations	
					feet^2/ped	LOS
Classon Avenue/ Pacific Street	Weekday Midday	North	33.9	12.3	81.3	A
		East	33.3	12.6	305.3	A
		South	33.6	13.2	72.5	A
		West	33.3	12.5	91.2	A
	Weekday PM	North	33.9	12.3	229.8	A
		East	33.3	12.6	206.2	A
		South	33.6	13.2	84.4	A
		West	33.3	12.5	149.0	A
	Saturday Midday	North	33.9	12.3	148.5	A
		East	33.3	12.6	195.0	A
		South	33.6	13.2	54.4	B
		West	33.3	12.5	163.5	A
Grand Avenue/ Pacific Street	Weekday Midday	North	33.8	14.7	507.3	A
		East	33.7	13.7	256.4	A
		South	33.8	12.4	338.9	A
		West	33.6	14.4	5323.7	A
	Weekday PM	North	33.8	14.7	958.8	A
		East	33.7	13.7	456.3	A
		South	33.8	12.4	503.7	A
		West	33.6	14.4	2323.2	A
	Saturday Midday	North	33.8	14.7	688.6	A
		East	33.7	13.7	393.0	A
		South	33.8	12.4	560.5	A
		West	33.6	14.4	6387.8	A

Table 2.9-13 Year 2023 With-Action Conditions Pedestrian Corner Analyses

Intersection	Peak Hour	Corner	Pedestrian Operations	
			feet^2/ped	LOS
Classon Avenue/ Pacific Street	Weekday MD	Northwest	315.0	A
		Northeast	507.0	A
		Southwest	220.2	A
		Southeast	473.6	A
	Weekday PM	Northwest	609.1	A
		Northeast	737.5	A
		Southwest	289.7	A
		Southeast	457.0	A
	Saturday MD	Northwest	568.6	A
		Northeast	597.5	A
		Southwest	262.2	A
		Southeast	349.0	A

Table 2.9-14 Year 2023 With-Action Conditions Pedestrian Sidewalk Analyses

Intersection	Peak Hour	Corner	Sidewalk	Pedestrian Operations	
				feet^2/ped	LOS
Classon Avenue/Pacific Street	Weekday Midday	NE	N-S	837.1	A
			E-W	727.4	A
		SE	N-S	1854.0	A
			E-W	454.2	B
		SW	N-S	425.8	B
			E-W	76.5	C
		NW	N-S	642.3	A
			E-W	2154.6	A
	Weekday PM	NE	N-S	726.0	A
			E-W	1145.0	A
		SE	N-S	1439.8	A
			E-W	623.4	A
		SW	N-S	546.6	A
			E-W	95.6	B
		NW	N-S	921.9	A
			E-W	2432.0	A
	Saturday Midday	NE	N-S	672.2	A
			E-W	1072.3	A
		SE	N-S	1351.5	A
			E-W	749.6	A
		SW	N-S	643.9	A
			E-W	95.6	B
		NW	N-S	997.1	A
			E-W	1710.0	A
Grand Avenue/Pacific Street	Weekday Midday	NE	N-S	459.5	B
			E-W	3912.4	A
		SE	N-S	509.2	B
			E-W	80.3	C
		SW	N-S	5475.0	A
			E-W	166.2	B
		NW	N-S	4664.7	A
			E-W	551.9	A
	Weekday PM	NE	N-S	764.7	A
			E-W	4446.4	A
		SE	N-S	862.2	A
			E-W	145.1	B
		SW	N-S	2595.1	A
			E-W	293.1	B
		NW	N-S	2597.4	A
			E-W	763.8	A
	Saturday Midday	NE	N-S	733.7	A
			E-W	2925.2	A
		SE	N-S	754.4	A
			E-W	156.5	B
		SW	N-S	2440.3	A
			E-W	202.8	B
		NW	N-S	4139.1	A
			E-W	661.5	A

2.9.4 Safety Assessment

The *CEQR Technical Manual* defines a "high crash location" as any location with 48 or more total reportable and non-reportable crashes, or five or more pedestrian/bicyclist injury crashes, in any consecutive 12 months of the most recent three-year period for which data are available. Crash data compiled by the NYCDOT for the most recent available three-year period (i.e., 2014 to 2016) were reviewed to identify the crash history at each of the study intersections. **Table 2.9-15** summarizes the total crashes at both of the study intersections, as well as the number of pedestrian, bicycle, and fatal crashes.

Table 2.9-15 Summary of NYCDOT Crash Data for 2014 to 2016

Intersection	Pedestrian Injury Crashes			Bicycle Injury Crashes			Total Pedestrian/ Bicycle Injury Crashes			Total Crashes (Reportable + Non-Reportable)		
	2014	2015	2016	2014	2015	2016	2014	2015	2016	2014	2015	2016
Classon Avenue/Pacific Street	0	0	1	0	0	2	0	0	3	0	3	4
Grand Avenue/Pacific Street	1	0	1	0	0	0	1	0	1	2	0	3
Total =	**1**	**0**	**2**	**0**	**0**	**2**	**1**	**0**	**4**	**2**	**3**	**7**

Source: New York City Department of Transportation (2014-2016).

As shown in **Table 2.9-15**, the total number of crashes for the three-year period between 2014 to 2016 inclusive) at each intersection are below the *CEQR* thresholds (i.e., 48 total crashes in any 12 months, or five pedestrian/bicyclist injury crashes, over the most recent three years) Accordingly, the two intersections are not considered high crash locations.

2.9.5 Parking

The *CEQR Technical Manual* indicates that parking analyses may be needed if a proposed project results in a need for quantified traffic analysis based on the Levels 1 and 2 screening assessments. With respect to the proposed action, no quantified traffic analysis is warranted based on these screening assessments; therefore, no parking analysis is warranted. Furthermore, the rezoning area is located within the *CEQR Technical Manual* Parking Zone 2. In this zone, the inability of a project or the surrounding area to accommodate a project's future parking demands is considered a parking shortfall, but is generally not considered significant due to the magnitude of available alternative modes of transportation (i.e., subway and bus). Therefore, no significant adverse parking impacts are expected as a result of the proposed action, and no detailed parking analysis is warranted.

2.9.6 Conclusions

This section presented an analysis of the effects of additional trips projected to be generated by the proposed action during the weekday and Saturday peak hours on the transportation system in the vicinity of the projected development sites. The following conclusions are drawn from this analysis:

- The proposed action would not lead to an increase of 50 or more vehicle trips at any one intersection in the vicinity of the projected development sites. Therefore, the proposed action would not lead to any significant adverse traffic impacts.

- The proposed action would not lead to an increase of 200 or more public bus trips, and the nearby Franklin Avenue subway station is not projected to experience an increase of 200 or more subway trips. Therefore, the proposed action would not lead to any significant adverse subway or bus impacts.

- The results of the pedestrian LOS analyses indicate that no significant adverse pedestrian impacts are projected to occur as a result of the proposed action.

- Neither of the study intersections – Classon Avenue/Pacific Street and Grand Avenue/Pacific Street – are classified as "high crash locations" based on *CEQR Technical Manual* criteria.

- Due to the location of the projected development sites within the *CEQR Technical Manual* Parking Zone 2, the proposed action's future parking demands are not considered significant due to the magnitude of available alternative modes of transportation, including frequent transit services (i.e., subway and bus). Therefore, no significant adverse parking impacts are projected.

2.10 AIR QUALITY

When assessing the potential for air quality significant impacts, the *CEQR Technical Manual* seeks to determine a proposed action's effect on ambient air quality, or the quality of the surrounding air. Ambient air can be affected by motor vehicles, referred to as "mobile sources," or by fixed facilities, referred to as "stationary sources." This can occur during operation and/or construction of a project being proposed. The pollutants of most concern are carbon monoxide, lead, nitrogen dioxide, ozone, relatively coarse inhalable particulates (PM_{10}), fine particulate matter ($PM_{2.5}$), and sulfur dioxide.

The *CEQR Technical Manual* generally recommends an assessment of the potential impact of mobile sources on air quality when an action increases traffic or causes a redistribution of traffic flows, creates any other mobile sources of pollutants (such as diesel train usage), or adds new uses near mobile sources (e.g., roadways, parking lots, garages). The *CEQR Technical Manual* generally recommends assessments when new stationary sources of pollutants are created, when a new use might be affected by existing stationary sources, or when stationary sources are added near existing sources and the combined dispersion of emissions would impact surrounding areas.

2.10.1 Mobile Sources

According to the *CEQR Technical Manual*, projects, whether site-specific or generic, may result in significant mobile source air quality impacts when they increase or cause a redistribution of traffic; create any other mobile sources of pollutants (such as diesel trains, helicopters etc.); or add new uses near mobile sources (roadways, garages, parking lots, etc.). Projects requiring further assessment include:

- Projects that would result in placement of operable windows, balconies, air intakes or intake vents generally within 200 feet of an atypical source of vehicular pollutants.

- Projects that would result in the creation of a fully or partially covered roadway, would exacerbate traffic conditions on such a roadway, or would add new uses near such a roadway.

- Projects that would generate peak hour auto traffic or divert existing peak hour traffic of 170 or more auto trips in this area of the City.

- Projects that would generate peak hour heavy-duty diesel vehicle traffic or its equivalent in vehicular emissions resulting from 12 or more heavy-duty diesel vehicles (HDDVs) for paved roads with average daily traffic of fewer than 5,000 vehicles, 19 or more HDDVs for collector roads, 23 or more HDDVs for principal and minor arterials, or 23 or more HDDVs for expressways and limited-access roads.

  Projects that would result in new sensitive uses (e.g., schools or hospitals) adjacent to large existing parking facilities or parking garage exhaust vents.

- Projects that would result in parking facilities or applications requesting the grant of a special permit or authorization for parking facilities; or projects that would result in a sizable number of other mobile sources of pollution (e.g., a heliport or a new railroad terminal).
- Projects that would substantially increase the vehicle miles traveled in a large area.

The proposed action would not result in any of the above thresholds being crossed and would not require further mobile source assessment. The proposed action would not result in the placement of new operable windows within 200 feet of any atypical vehicular source of pollutants, nor would it result in the creation of a fully or partially covered roadway, generate over 170 or more net new increment auto trips or notable heavy-duty diesel vehicle traffic, place new sensitive uses adjacent to a large parking facility, result in other mobile sources of pollution, or substantially increase vehicle miles traveled.

2.10.2 Stationary Sources

According to the *CEQR Technical Manual*, projects may result in stationary source air quality impacts when one or more of the following occurs:

- New stationary sources of pollutants are created (e.g., emission stacks for industrial plants, hospitals, other large institutional uses).

- Certain new uses near existing (or planned future) emissions stacks are introduced that may affect the use.

- Structures near such stacks are introduced so that the structures may change the dispersion of emissions from the stacks so that surrounding uses are affected.

- Fossil fuels (fuel oil or natural gas) for heating/hot water, ventilation, and air conditioning systems are used.

- Large emission sources are created (e.g., solid waste or medical-waste incinerators, cogeneration facilities, asphalt/concrete plants, or power-generating plants, etc.).

- New sensitive uses are located near a large emission source.

- Medical, chemical, or research labs are created or result in new uses being located near them.

- Operation of manufacturing or processing facilities is created.
- New sensitive uses created within 400 feet of manufacturing or processing facilities.
- New uses created within 400 feet of a stack associated with commercial, institutional, or residential developments (and the height of the new structures would be similar to or greater than the height of the emission stack).
- Potentially significant odors are created.
- New uses near an odor-producing facility are created.
- "Non-point" sources that could result in fugitive dust are created.
- New uses near non-point sources are created.
- A generic or programmatic action is introduced that would change or create a stationary source or that would expose new populations to such a stationary source.

The projected and potential development sites would utilize fossil fuels for the future buildings' heating/hot water, ventilation, and air conditioning systems (HVAC) systems, thus an HVAC and Hot Water Boiler Emissions screening was completed. In addition, detailed stationary source air quality analyses were performed to evaluate the potential for project-on-project impacts as well as cumulative impacts. Finally, an industrial sources screening assessment was completed to assess the potential for adverse effects due to industrial uses that may be located proximate to the rezoning area. The analyses are based on the RWCDS that has been established for the proposed action, as shown in **Table 2.10-1**.

Table 2.10-1 Reasonable Worst-Case Development Scenario (RWCDS)

Site No.	Block	Lot	Lot Area (sf)	Existing Zoning	Proposed Zoning	ZQA/MIH: Allowable Building Size in GSF (5.6 FAR)	ZQA/MIH: Allowable Height (ft.)
Projected Development Site 1	1133	32	23,100	M1-1	R7D/C2-4	159,352	115
	1133	42	2,750	M1-1	R7D/C2-4		
Existing Site1	1133	43	2,750	M1-1	R7D/C2-4	--	--
	1133	44	2,750	M1-1	R7D/C2-4	--	--
Projected Development Site 2	1133	45	2,750	M1-1	R7D/C2-4	16,940	115
Potential Development Site 1	1133	46	2,750	M1-1	R7D/C2-4	43,921	115
	1133	47	2,750	M1-1	R7D/C2-4		
	1133	53	1,630	M1-1	R7D/C2-4		
Projected Development Site 3	1133	48	1,320	M1-1	R7D/C2-4	23,962	115
	1133	49	2,570	M1-1	R7D/C2-4		
Projected Development Site 4	1133	51	1,630	M1-1	R7D/C2-4	20,082	115
	1133	52	1,630	M1-1	R7D/C2-4		

[1] Existing site will remain unchanged with no future development anticipated.

2.10.2.1 HVAC and Hot Water Boiler Emissions Screening

For the purposes of detailed HVAC analysis to determine the potential for cumulative impacts related to e missions from the HVAC systems of all Projected Development Sites and Potential Development Site, it was assumed that the hypothetical HVAC stack will be located at the middle of all sites. The hypothetical stack height and development size was plotted on the graph for residential developments and No. 2 fuel oil provided in the air quality appendices in the *CEQR Technical Manual*, as shown in **Figure 2.10-1**. This graph indicates the minimum distance between the proposed development and buildings of a similar or greater height in order to avoid a potential air quality impact. Stack height for the emissions vent was estimated as three feet higher than the proposed building height, utilizing the 100 foot curve. For the development of approximately this size (264,257 gsf in total), the emissions vents should be at least approximately 172 feet away from the nearest building of similar or greater height. The nearest existing building of similar height to the projected and potential development sites is the approximately 144,493-square-foot, 14-story building that is located at approximately 550 feet south at 467-75 St. Marks Avenue, between Classon and Franklin Avenues (Block 1149, Lot 18). As such, the operation of the proposed development is not expected to result in any stationary source air quality impacts.

Figure 2.10-1 HVAC Screening Analysis, Cumulative Impact from all Projected and Potential Sites

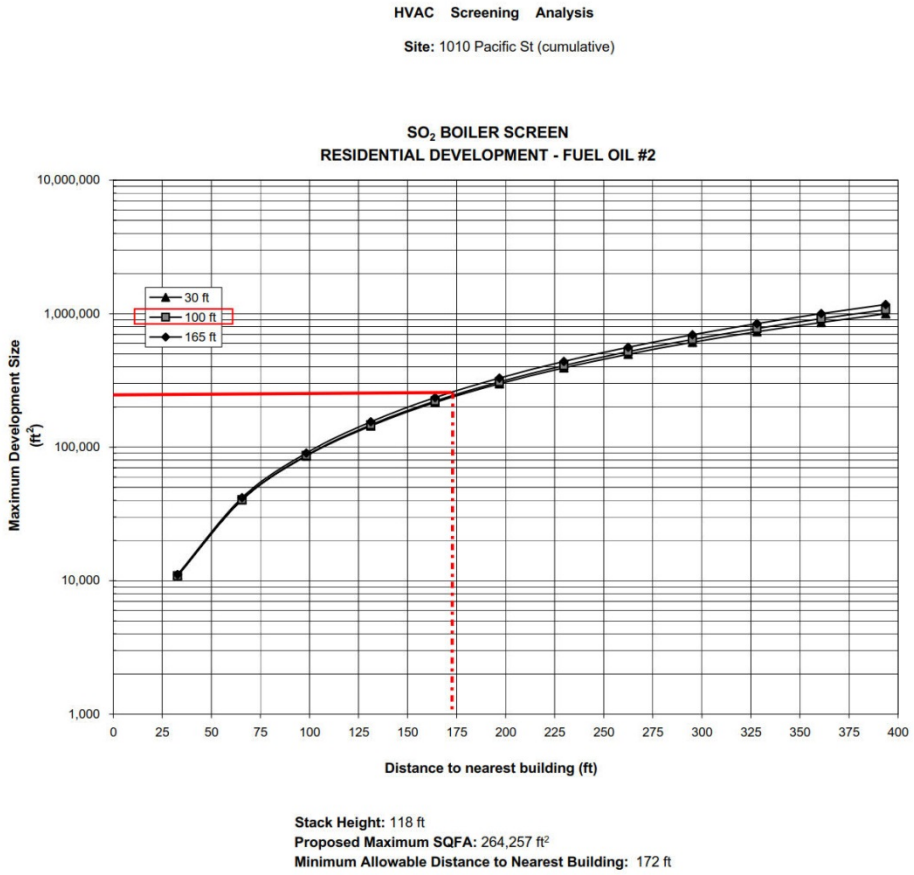

However, as indicated in *CEQR Technical Manual*, this screening figure is only appropriate for sources at least 30 feet from the nearest buildings of similar or greater height. Since Projected Sites 2, 3, 4 and Potential Site are adjacent and would be attached to each other, a refined dispersion modeling analysis approach is warranted. Additionally, the residential buildings located at 1020 Pacific St (Block 1133, Lot 43) and 1022 Pacific St (Block 1133, Lot 44) would be immediately adjacent to Projected Site 1 and Projected Site 2, a detailed modeling analysis is also required to determine the cumulative impact from the total development on these two buildings.

2.10.2.2 Detailed Stationary Source Analyses

The projected development sites are located within close proximity to one another (see **Figure 2.9-2**), and are all assumed to be redeveloped with 115-feet-tall buildings. As such, detailed stationary source air quality analyses were undertaken to assess the potential for project-on-project impacts and cumulative impacts. More specifically, the detailed analyses evaluate the potential for the following potential impacts:

a) The cumulative impact from the proposed HVAC system of Projected Development Sites 1, 2, 3, 4, and Potential Development Site 1 on the Existing Site;

b) The cumulative impact from the proposed HVAC system of Projected Development Sites 2, 3, and 4, and Potential Development Site 1 on Projected Development Site 1;

c) The cumulative impact from the proposed HVAC system of Projected Development Sites 1, 3 and 4, and Potential Development Site 1 on Projected Development Site 2;

d) The cumulative impact from the proposed HVAC system of Projected Development Sites 1, 2 and 4, and Potential Development Site 1on Projected Development Site 3;

e) The cumulative impact from the proposed HVAC system of Projected Development Sites 1, 2 and 3, and Potential Development Site 1on Projected Development Site 4.

f) The cumulative impact from the proposed HVAC system of Projected Development Sites 1, 2, 3, and 4 on Potential Development Site 1.

A detailed air quality modeling analysis was performed using USEPA's AERMOD model and the most recent five years of meteorological data. The USEPA's AERMOD is the most suitable mathematical dispersion model for performing a refined air quality impact analysis. AERMOD, as described in *User's Guide for the AMS/EPA Regulatory Model – AERMOD* (EPA-454/B-03-001), calculates pollutant concentrations from one or more sources using hourly meteorological data. AERMOD is applicable to rural and urban areas, flat and complex terrain, surface and elevated releases, and multiple sources (including point, area, and volume sources). AERMOD incorporates current concepts about flow and dispersion in complex terrain, including updated treatments of the boundary layer theory, understanding of turbulence and dispersion, and handling of terrain interactions. The AERMOD model also incorporates the algorithms from the PRIME model, which is designed to predict impacts in the "cavity region" (i.e., the area around a structure which under certain conditions may affect an exhaust plume, causing a portion of the plume to become entrained in a recirculation region). The Building Profile Input Program (BPIP) program for the PRIME model (BPIPRM) was used to determine the projected building dimensions modeling with the building downwash algorithm enabled. The modeling of downwash from sources accounts for all obstructions within a radius equal to five obstruction heights of the stack. In this analysis, both downwash and no downwash conditions have been taken in consideration, and analyzed.

Figure 2.10-2 1010 Pacific Street Rezoning Project Sites



The meteorological data set used with AERMOD consists of the latest available five consecutive years (2013-2017) of meteorological data in order to ensure that an adequate number of hours are simulated to determine compliance with applicable standards and guideline concentrations. As recommended in the *CEQR Technical Manual,* this 5-year meteorological data set uses surface data collected at the nearest representative airport, J.F.K. International Airport, and upper air data concurrently collected at Brookhaven, NY. The meteorological data set includes wind speeds, wind directions, ambient temperatures, and mixing height data for every hour of a year. These data were processed using the EPA AERMET program to develop data in a format which can be readily processed by the AERMOD model. The land uses around the site where meteorological surface data were available were classified using categories defined in digital United States Geological Survey (USGS) maps to determine surface parameters used by the AERMET program.

Discrete receptors (i.e., locations at which concentrations are calculated) were modeled along the existing and proposed buildings' façades to represent potentially sensitive locations such as operable windows and intake vents. For each of the proposed buildings, receptors were conservatively placed on the façades of the maximum development envelope. Rows of receptors at spaced intervals on the modeled buildings were analyzed at multiple elevations.

The 1-hour and annual average NO_2 concentration increments from the proposed project's stationary combustion sources were estimated using AERMOD model's Tier 2 updated Ambient Ratio Method, referred as "ARM2". ARM2 does not require additional input data that is subject to case-by-case review and approval. The model execution time for ARM2 is faster than for those more computationally intensive refined methods. The ARM2 method performs better than the old ARM method, and is comparable to the more refined EPA modeling methods for 1-hour ambient NO_2 concentrations.

Total 1-hour NO_2 concentrations were determined following methodologies that are accepted by the EPA, and which are considered appropriate and conservative. The methodology used to determine the compliance of total 1-hour NO_2 concentrations from the proposed sources with the 1-hour NO_2 NAAQS was based on adding the monitored background to modeled concentrations, as follows: hourly modeled concentrations from proposed sources were first added to the seasonal hourly background monitored concentrations; then the highest combined daily 1-hour NO_2 concentration was determined at each receptor location and the 98th percentile daily 1-hour maximum concentration for each modeled year was calculated within the AERMOD model; finally the 98th percentile concentrations were averaged over the latest five years.

The refined dispersion modeling analysis was performed for $PM_{2.5}$, PM_{10}, NO_2 and SO_2 with emission rates for No. 2 fuel oil first, then natural gas if No. 2 fuel oil fails. If a source could not meet the National Ambient Air Quality Standards (NAAQS) or $PM_{2.5}$ *de minimis* criteria, the stack would then be set back in five-foot increments until the source met the respective criteria.

An estimate of the emissions from the HVAC systems was made based on the proposed development size, type of fuel used and type of construction with below fuel consumptions rates: for residential developments, 60.3 ft^3/ft^2-year and 0.43 gal/ft^2-year would be used for natural gas and No. 2 fuel oil, respectively. Short-term factors was determined by using peak hourly fuel consumption estimates for heating, hot water and cooling systems. Emission factors for each fuel were obtained from the EPA *Compilation of Air Pollutant Emission Factors, AP-42, Fifth Edition, Volume I: Stationary Point and Area Sources*. **Table 2.10-2** presents the HVAC emission rates firing No. 2 fuel oil and stack parameters used in the AERMOD.

Impacts concentrations would first be predicted using AERMOD assuming that all HVAC systems are powered by the No. 2 fuel oil. If exceedances of criteria were predicted under the No. 2 fuel oil option, a further modeling analysis under the natural gas option would be warranted.

Additionally, it may not be reasonable to assume the stack(s) to be at the edge of the building roof. The *Building Code of the City of New York* regulates the placement of chimneys and vents and of buildings relative to nearby chimneys and vents. The *Zoning Resolution* and the *Air Pollution Control Code* both contain performance standards for emissions from manufacturing uses. These regulations should be considered when determining the reasonable worst-case location(s) for modeling, when the exact locations of the proposed stack(s) are not available.

Table 2.10-2 HVAC Emission Rates and Stack Parameters for the Proposed Buildings

	Projected Site 1	Projected Site 2	Projected Site 3	Projected Site 4	Potential Site 1
Emission Rate (g/s)					
1-Hr NO_x	7.21E-02	7.66E-03	1.08E-02	9.08E-03	1.99E-02
Annual NO_x	1.97E-02	2.10E-03	2.97E-03	2.49E-03	5.44E-03
24-Hr PM_{10}	1.19E-02	1.26E-03	1.79E-03	1.50E-03	3.28E-03
24-Hr $PM_{2.5}$	1.19E-02	1.26E-03	1.79E-03	1.50E-03	3.28E-03
Annual $PM_{2.5}$	3.26E-03	3.46E-04	4.90E-04	4.11E-04	8.98E-04
1-Hr SO_2	7.67E-04	8.16E-05	1.15E-04	9.67E-05	2.12E-04
Stack Parameters					
Stack Height (feet)	118	118	118	118	118
Stack Diameter (feet)	1	1	1	1	1
Exhaust Temperature (°F)	423	423	423	423	423
Exhaust Velocity (m/s)	7.8	7.8	7.8	7.8	7.8

The AERMOD model was used to predict impacts of SO_2, NO_2, PM_{10}, and $PM_{2.5}$ emissions over the averaging time following the NAAQS criteria. For $PM_{2.5}$, CEQR-established *de minimis* thresholds for $PM_{2.5}$ were used to determine significant impacts:

- Predicted 24-hour maximum $PM_{2.5}$ concentration increase of more than half the difference between the 24-hour background concentration and the 24-hour standard; or

- Predicted annual average $PM_{2.5}$ concentration increments greater than 0.3 $\mu g/m^3$ at any receptor location for stationary sources.

The modeling results would be added to the background concentrations, then be compared to NAAQS or *de minimis*. Background concentrations are ambient pollution levels associated with existing stationary, mobile, and other area emission sources. The NYSDEC maintains an air quality monitoring network and produces annual air quality reports that include monitoring data for CO, NO_2, PM_{10}, $PM_{2.5}$, and SO_2. To develop background levels, pollutant concentrations from monitoring sites located closest to the project area were obtained from New York State Ambient Air Quality Report for 2017. **Table 2.10-3** summarizes the background concentrations and critera for each of the pollutants. PM2.5 impacts are assessed on an incremental basis and compared with the $PM_{2.5}$ *de minimis* criteria, without considering the annual background. Therefore, the annual $PM_{2.5}$ background is not presented in the table.

Table 2.10-3 Background Concentration and Criteria

Pollutant	Averaging Time	Monitoring Station	Background Concentration ($\mu g/m^3$)	NAAQS / *de minimis* ($\mu g/m^3$)
Nitrogen Dioxide (NO_2)	1-hour	Queens College 2	112.2	188
	Annual	Queens College 2	31.2	100
Particular Matter (PM_{10})	24-hour	Division Street	60	150
Particular Matter ($PM_{2.5}$)	24-hour	PS 314	16.7	9.1
	Annual	PS 314	-	0.3
Sulfur Dioxide (SO_2)	1-hour	Queens College 2	24.9	196

Modeling Results

a) Cumulative HVAC Impact on Existing Site

Table 2.10-4 presents the AERMOD model predicted cumulative impacts from Projected Development Sites 1, 2, 3, 4, and Potential Development Site on the Existing Site using No. 2 fuel oil. As shown in the table, no significant adverse air quality impact on the Existing Site would occur.

Table 2.10-4 Maximum Modeled Concentration ($\mu g/m^3$) on Existing Site

Pollutant	Averaging Time	Maximum Modeled Concentration	Background Concentration	Total Concentration	NAAQS/ *de minimis*
NO_2	annual	0.7	31.2	31.9	100.0
	1-hour	105.8	-	105.8	188.0
SO_2	1-hour	0.1	24.9	25.0	196
PM_{10}	24-hour	0.97	60	61.0	150
$PM_{2.5}$	annual	0.13	-	0.15	0.3
	24-hour	0.97	-	0.97	9.1

b) Cumulative HVAC Impact on Projected Development Site 1

Table 2.10-5 presents the AERMOD model predicted cumulative impacts from Projected Development Sites 2, 3, 4, and Potential Development Site 1 on Projected Development Site 1. As shown in the table, no significant adverse air quality impact on Projected Site 1 would occur.

Table 2.10-5 Maximum Modeled Concentration (µg/m^3) on Projected Site 1

Pollutant	Averaging Time	Maximum Modeled Concentration	Background Concentration	Total Concentration	NAAQS/ *de minimis*
NO_2	Annual	0.2	31.2	31.3	100.0
	1-hour	109.8	-	105.8	188.0
SO_2	1-hour	0.2	24.9	25.1	196
PM_{10}	24-hour	1.34	60	61.3	150
$PM_{2.5}$	Annual	0.04	-	0.15	0.3
	24-hour	1.34	-	1.34	9.1

c) Cumulative HVAC Impact on Projected Development Site 2

Table 2.10-6 presents the AERMOD model predicted cumulative impacts from the HVAC system of Projected Development Sites 1, 3, 4, and Potential Development Site 1 on Projected Development Site 2. As shown in the table, no significant adverse air quality impact on Projected Development Site 2 would occur.

Table 2.10-6 Maximum Modeled Concentration (µg/m^3) on Projected Site 2

Pollutant	Averaging Time	Maximum Modeled Concentration	Background Concentration	Total Concentration	NAAQS/ *de minimis*
NO_2	annual	0.6	31.2	31.8	100.0
	1-hour	129.6	-	129.6	188.0
SO_2	1-hour	0.5	24.9	25.4	196
PM_{10}	24-hour	2.76	60	62.8	150
$PM_{2.5}$	annual	0.11	-	0.11	0.3
	24-hour	2.76	-	2.76	9.1

d) Cumulative HVAC Impact on Projected Development Site 3

Table 2.10-7 presents the AERMOD model predicted cumulative impacts from Projected Development Sites 1, 2, 4, and Potential Development Site 1on Projected Development Site 3. As shown in the table, no significant adverse air quality impact on Projected Development Site 3 would occur.

Table 2.10-7 Maximum Modeled Concentration (µg/m3) on Projected Site 3

Pollutant	Averaging Time	Maximum Modeled Concentration	Background Concentration	Total Concentration	NAAQS/ *de minimis*
NO_2	annual	1.3	31.2	32.5	100.0
	1-hour	147.7	-	147.7	188.0
SO_2	1-hour	0.7	24.9	25.6	196
PM_{10}	24-hour	6.17	60	66.2	150
$PM_{2.5}$	annual	0.24	-	0.24	0.3
	24-hour	6.17	-	6.17	9.1

e) Cumulative HVAC Impact on Projected Development Site 4

Table 2.10-8 presents the AERMOD model predicted cumulative impacts from Projected Development Sites 1, 2, 3, and Potential Development Site 1 on Projected Development Site 4. As shown in the table, no significant adverse air quality impact on Projected Development Site 4 would occur.

Table 2.10-8 Maximum Modeled Concentration (µg/m^3) on Projected Site 4

Pollutant	Averaging Time	Maximum Modeled Concentration	Background Concentration	Total Concentration	NAAQS/ *de minimis*
NO_2	annual	1.4	31.2	32.6	100.0
	1-hour	150.5	-	150.5	188.0
SO_2	1-hour	0.7	24.9	25.6	196
PM_{10}	24-hour	6.39	60	66.4	150
$PM_{2.5}$	annual	0.26	-	0.26	0.3
	24-hour	6.39	-	6.39	9.1

f) Cumulative HVAC Impact on Potential Development Site 1

Table 2.10-9 presents the AERMOD model predicted cumulative impacts from Projected Development Sites 1, 2, 3, and 4 on Potential Development Site 1. As shown in the table, no significant cumulative adverse air quality impacts on Potential Development Site 1 would occur.

Table 2.10-9 Maximum Modeled Concentration (µg/m^3) on Potential Site 1

Pollutant	Averaging Time	Maximum Modeled Concentration	Background Concentration	Total Concentration	NAAQS/ *de minimis*
NO_2	annual	0.7	31.2	31.9	100.0
	1-hour	123.7	-	123.7	188.0
SO_2	1-hour	0.4	24.9	25.3	196
PM_{10}	24-hour	2.76	60	62.8	150
$PM_{2.5}$	annual	0.12	-	0.12	0.3
	24-hour	2.76	-	2.76	9.1

Proposed (E) Designations

To ensure that there are no significant adverse impacts related to emissions from the HVAC systems associated with the With-Action development onto existing or other projected buildings of similar or greater height, certain restrictions would be required regarding fuel type and/or exhaust stack location for some of the development sites. The text of the (E) designation (E-XXX) would be as follows:

- Projected Site 1 (Block 1133, Lot 32 and 42) - Any new residential/commercial development on the above-referenced property must ensure HVAC stack(s) is located at the highest tier and at least 118 feet above grade, to avoid any significant adverse air quality impacts.

- Projected Site 2 (Block 1133, Lot 45) - Any new residential/commercial development on the above-referenced property must ensure stack(s) is located at the highest tier and at least 118 feet above grade, to avoid any significant adverse air quality impacts.

- Projected Site 3 (Block 1133, Lot 48 and 49) - Any new residential/commercial development on the above-referenced property must ensure stack(s) is located at the highest tier and at least 118 feet above grade, to avoid any significant adverse air quality impacts.

- Projected Site 4 (Block 1133, Lot 51 and 52) - Any new residential/commercial development on the above-referenced property must ensure stack(s) is located at the highest tier and at least 118 feet above grade, to avoid any significant adverse air quality impacts.

- Potential Site 1 (Block 1133, Lot 46, 47, and 53) - Any new residential/commercial development on the above-referenced property must ensure HVAC stack(s) is located at the highest tier and at least 118 feet above grade, to avoid any significant adverse air quality impacts.

2.10.2.3 Industrial Sources

In addition to evaluating the impact of the proposed rezoning on the study area or other potential receptors, a determination must be made whether the projected and potential development sites might be impacted by existing or planned emissions stacks from nearby adjacent industrial or manufacturing uses. Because the rezoning area is located in an area with a mix of industrial and residential uses directly adjacent to one another, an assessment of industrial uses in the vicinity of the subject properties was conducted. The MapPluto database was utilized to flag potential parcels within the 400-foot study area that may contain active industrial or manufacturing uses. **Table 2.10-10** identifies manufacturing or industrial uses within the study area, based on the MapPluto database.

A field search verified that none of these sites utilized an emissions stack visible from street level. A freedom of information law (FOIL) request was submitted to DEP to request any current air toxic permits related to properties within the study area. Based upon the absence of emissions stacks and the highly mixed-use character of the study area, it is not believed than any existing land uses pose a hazardous impact to the projected development site.

At the request of the Department of City Planning, the Lead Agency for the proposed action, three properties were further investigated to confirm the presence or absence of active industrial and manufacturing uses. The three properties, which are denoted with an asterisk in Table 2.9-10, include 1025 Atlantic Avenue (Block 2020, Lot 1), 868 Dean Street (Block 1141, Lot 18), and 837 Dean Street (Block 1141, Lot 59).

A search of DEP's CATS online permitting database found that four expired permits are associated with these three properties, as indicated in **Table 2.10-11**.

A field inspection was conducted to identify current uses of each property and to determine whether any of these properties still contain manufacturing or processing facilities. The results are summarized below.

- **1025 Atlantic Avenue (Block 2020, Lot 1) -** 1025 Atlantic Avenue is currently occupied by an auto repair/flat tire repair facility. During the field visit the property exhibited no visual evidence of an emissions stack, paint spray booth or other indicator of an air toxics issue.

- **868 Dean Street (Block 1141, Lot 18) -** 868 Dean Street is currently the site of a garage occupied by Monsey Tours, a charter bus operator. During the field visit the property exhibited no visual evidence of an emissions stack, paint spray booth or other indicator of an air toxics issue.

- **835 Bergen Street (Block 1141, Lot 59) –** 835 Bergen Street is currently the site of a single-story garage used for equipment and material storage. During the field visit the property exhibited no visual evidence of an emissions stack, paint spray booth or other indicator of an air toxics issue.

As no active industrial uses have been identified within the 400-foot study area, a detailed industrial source analysis is not warranted. Thus the proposed rezoning is not expected to result in significant adverse industrial source impacts.

Table 2.10-10 Industrial and Manufacturing Uses within the 400-Foot Study Area

Address	Owner Name	Block	Lot
1050 Atlantic Avenue	Cubesmart, L.P.	1125	40
1093 Pacific Street	Gmdc Atlantic Avenue	1126	75
998 Atlantic Avenue	Atlantic Pacific Hold	1125	10
1042 Atlantic Avenue	Gold Star A Realty	1125	33
892 Dean Street	Golden Seldan Realty	1141	28
624 Classon Avenue	Dean Classon, L.L.C.	1133	54
813 Bergen Street	Velvet Realty Corp	1141	69
1024 Pacific Street	Pacific Grand Realty	1133	45
904 Dean Street	Golden Seldan Realty	1141	33
622 Classon Avenue	Engberg Ian	1133	53
989 Pacific Street	Atlantic Pacific Hold	1125	80
971 Dean Street	Byg Realty Corp	1134	81
972 Dean Street	Jeffers, Oswald	1142	16
837 Bergen Street	Golden Year Realty Co	1141	59
831 Bergen Street	Golden Seldan Realty	1141	61
814 Bergen Street	P M M	1148	29
630 Classon Avenue	Dean Classon, L.L.C.	1133	57
537 Grand Avenue	Kerenor Properties Co	1133	3
998 Pacific Street	Lisa Martensson	1133	32
1034 Atlantic Avenue	Gold Star A Realty	1125	29
1026 Pacific Street	Engberg Ian	1133	46
964 Dean Street	964 Dean Acquisition	1142	12
893 Bergen Street	893 Bergen LLC	1142	82
987 Pacific Street	Atlantic Pacific Hold	1125	81
626 Classon Avenue	Dean Classon, L.L.C.	1133	55
1058 Pacific Street	Ten Fifty Eight LLC	1134	17
819 Bergen Street	825 Bergen LLC	1141	128
481 Grand Avenue	Cubesmart, L.P.	2019	1
1035 Atlantic Avenue	1035 Atlantic Ave. LLC	2020	86
1025 Atlantic Avenue*	1025 Realty Corp.	2020	1
999 Atlantic Avenue	999 Atlantic Avenue LLC	2019	60
1041 Atlantic Avenue	Slaw Realty Co., Inc.	2020	77
868 Dean Street*	585 Meserole Street Co.	1141	18
837 Dean Street*	Golden Year Realty Co	1141	59

* *These three properties were further investigated, as discussed below.*

Table 2.10-11 DEP CATS Database Search Results

Block	Lot	Address	Permit Type	Permit Status
2020	1	1025 Atlantic Avenue	Certificate to Operate - Industrial	Expired – 4/21/11
1141	18	868 Dean Street	Certificate to Operate - Industrial	Expired – 10/4/02
1141	59	835 Bergen Street	Certificate to Operate - Industrial	Expired – 10/6/01
			Boiler Registration	Expired – 7/9/00

2.11 NOISE

Noise is defined as any unwanted sound, and sound is defined as any air pressure variation that the human ear can detect. Human beings can detect a large range of sound pressures ranging from 20 to 20 million micropascals, but only those air-pressure variations occurring within a particular set of frequencies are experienced as sound. Air-pressure changes that occur between 20 and 20,000 times a second, stated as units of Hertz (Hz), are registered as sound.

In terms of hearing, humans are less sensitive to low frequencies (<250 Hz) than mid-frequencies (500-1,000 Hz). Humans are most sensitive to frequencies in the 1,000 to 5,000 Hz range. Since ambient noise contains many different frequencies all mixed together, measures of human response to noise assign more weight to frequencies in this range. This is known as the A-weighted sound level.

Noise is measured in sound pressure level (SPL), which is converted to a decibel scale. The decibel is a relative measure of the sound level pressure with respect to a standardized reference quantity. Decibels on the A-weighted scale are termed “dB(A).” The A-weighted scale is used for evaluating the effects of noise in the environment because it most closely approximates the response of the human ear. On this scale, the threshold of discomfort is 120 dB(A), and the threshold of pain is about 140 dB(A). **Table 2.11-1** shows the range of noise levels for a variety of indoor and outdoor noise levels.

Because the scale is logarithmic, a relative increase of 10 decibels represents a sound pressure level that is 10 times higher. However, humans do not perceive a 10 dB(A) increase as 10 times louder; they perceive it as twice as loud. The following are typical human perceptions of dB(A) relative to changes in noise level:

- 3 dB(A) change is the threshold of change detectable by the human ear;
- 5 dB(A) change is readily noticeable; and
- 10 dB(A) increase is perceived as a doubling of the noise level.

As a change in land use may result in a change in type and intensity of noise perceived by residents, patrons and employees of a neighborhood, the *CEQR Technical Manual* recommends an analysis of two principal types of noise sources: mobile sources; and stationary sources. Both types of noise sources are examined in the following sections.

Table 2.11-1 Sound Pressure Level & Loudness of Typical Noises in Indoor & Outdoor Environments

Noise Level dB(A)	Subjective Impression	Typical Sources		Relative Loudness (Human Response)
		Outdoor	Indoor	
120-130	Uncomfortably Loud	Air raid siren at 50 feet (threshold of pain)	Oxygen torch	32 times as loud
110-120	Uncomfortably Loud	Turbo-fan aircraft at take-off power at 200 feet	Riveting machine Rock band	16 times as loud
100-110	Uncomfortably Loud	Jackhammer at 3 feet		8 times as loud
90-100	Very Loud	Gas lawn mower at 3 feet Subway train at 30 feet Train whistle at crossing Wood chipper shredding trees Chain saw cutting trees at 10 feet	Newspaper press	4 times as loud
80-90	Very Loud	Passing freight train at 30 feet Steamroller at 30 feet Leaf blower at 5 feet Power lawn mower at 5 feet	Food blender Milling machine Garbage disposal Crowd noise at sports event	2 times as loud
70-80	Moderately Loud	NJ Turnpike at 50 feet Truck idling at 30 feet Traffic in downtown urban area	Loud stereo Vacuum cleaner Food blender	Reference loudness (70 dB(A))
60-70	Moderately Loud	Residential air conditioner at 100 feet Gas lawn mower at 100 feet Waves breaking on beach at 65 feet	Cash register Dishwasher Theater lobby Normal speech at 3 feet	2 times as loud
50-60	Quiet	Large transformers at 100 feet Traffic in suburban area	Living room with TV on Classroom Business office Dehumidifier Normal speech at 10 feet	1/4 as loud
40-50	Quiet	Bird calls Trees rustling Crickets Water flowing in brook	Folding clothes Using computer	1/8 as loud
30-40	Very quiet		Walking on carpet Clock ticking in adjacent room	1/16 as loud
20-30	Very quiet		Bedroom at night	1/32 as loud
10-20	Extremely quiet		Broadcast and recording studio	
0-10	Threshold of Hearing			

Sources: Noise Assessment Guidelines Technical Background, by Theodore J. Schultz, Bolt Beranek and Newman, Inc., prepared for the US Department of Housing and Urban Development, Office of Research and Technology, Washington, D.C., undated; Sandstone Environmental Associates, Inc.; Highway Noise Fundamentals, prepared by the Federal Highway Administration, US Department of Transportation, September 1980; Handbook of Environmental Acoustics, by James P. Cowan, Van Nostrand Reinhold, 1994.

2.11.1 Mobile Sources

Mobile noise sources are those which move in relation to receptors. The mobile source screening analysis addresses potential noise impacts associated with vehicular traffic generated by the proposed action.

According to the *CEQR Technical Manual*, if existing passenger car equivalent (PCE) values are increased by 100 percent or more due to a proposed action, a detailed analysis is generally performed. Vehicular traffic studies are not warranted, as the proposed action is not expected to generate over 50 vehicle trips through any local intersection during peak periods. The surrounding roadway network currently contains sufficient traffic on area roadways. Within the study area, Atlantic Avenues has a functional classification as "Principal Arterial (other)" roadways under the National Highway System (NHS). South of the rezoning area, Dean Street has a functional classification as a "Major Collector" roadway, as does Bergen Street, further south and Classon Avenue abutting the rezoning area to the east. Within the study area, Atlantic Avenue is a designated "Through Truck Route" by NYCDOT. As such, the proposed action would not result in a doubling of PCEs on area roadways or at any intersections, and no significant adverse mobile source noise impacts due to vehicular traffic are anticipated as a result of the proposed action.

As discussed in the *CEQR Technical Manual*, if a project is located in areas with high ambient noise levels, which typically include those near heavily-traveled thoroughfares, airports, exposed rail, or other loud activities; further noise analysis may be warranted to determine the attenuation measures for the project. The proposed rezoning area is located at 1010 Pacific Street in the Prospect Heights neighborhood of Brooklyn. Although the proposed action is unlikely to generate sufficient traffic volumes to warrant a mobile source analysis, ambient noise levels may be affected by the rezoning area's adjacency to Atlantic and Classon Avenues which are heavily trafficked roadways. As such, ambient noise levels were measured to provide an assessment of the potential for traffic noise to have a significant adverse effect on future residents.

The *CEQR Technical Manual* provides noise exposure guidelines in terms of L_{eq} and L_{10} for the maximum amount of allowable noise under existing regulations. L_{eq} is the continuous equivalent sound level. The sound energy from the fluctuating sound pressure levels is averaged over time to create a single number to describe the mean energy or intensity level. High noise levels during a measurement period will have greater effect on the L_{eq} than low noise levels. The L_{eq} has an advantage over other descriptors because L_{eq} values from different noise sources can be added and subtracted to determine cumulative noise levels. In comparison, L_{10} is the SPL exceeded ten percent of the time. Similar descriptors include the L_{50}, L_{01}, and L_{90} values.

Because the predominant noise sources in the rezoning area are vehicular traffic and aircraft noise, noise monitoring was conducted during peak vehicular travel periods, 8:00-10:00 am, 12:00-1:00 pm, and 5:00-6:00 pm for locations affected by vehicular traffic.

Noise measurements were conducted on February 2nd and 9th, 2016 at two locations in front of the proposed rezoning area. A Type 2 Larson Davis LxT sound meter with windshield was used to conduct the noise monitoring. The meter was placed on a tripod at a height of approximately five feet above the ground, away from any other surfaces. The meter was calibrated prior to and following each monitoring session.

Noise measurements were conducted adjacent to the rezoning area on the sidewalk of Pacific Street at:

- Location 1: the intersection of Pacific Street and Classon Avenue
- Location 2: middle block of Pacific Street between Classon and Grand Avenues, in front of Projected Development Site 1 at 1010 Pacific Street.

Noise Measurement Location 1 was influenced by the vehicular traffic from Classon Avenue as well as Atlantic Avenue, especially during AM peak hour. When traffic levels are high, engines from heavy trucks generated a high level of noise when idling and starting. NYC Transit's elevated Franklin Avenue Shuttle (S Train) is located approximately 650 feet east of the intersection of Pacific Street and Classon Avenue. However, the train noise was barely audible during the measurement periods.

The results of the noise measurements are summarized in **Tables 2.11-2** and **2.11-3**.

Table 2.11-2 Location 1: Measured Noise Levels (dB(A))

Time Period	L_{eq}	L_{10}
AM (8:00 – 10:00 AM)	69.5	69.8
Off-peak (12:00 PM – 1:00 PM)	66.8	69.0
PM (5:00 – 6:00 PM)	66.6	69.5

Table 2.11-3 Location 2: Measured Noise Levels (dB(A))

Time Period	L_{eq}	L_{10}
AM (800 – 10:00 AM)	64.6	67.8
Off-peak (12:00 PM – 1:00 PM)	67.9	69.2
PM (5:00 – 6:00 PM)	63.4	68.0

Note: Off-peak reading skewed likely due to emergency vehicle driving through the monitoring area as well as presence of UPS delivery person working in area.

In 1983, the DEP adopted the City Environmental Protection Order-City Environmental Quality Review (CEPO-CEQR) noise standards at the exterior façade to achieve interior noise levels of 45 dB(A) or below. CEPO-CEQR Noise Standards classify noise exposure into four categories: Acceptable, Marginally Acceptable, Marginally Unacceptable and Clearly Unacceptable. As noted in the *CEQR Technical Manual*, these standards are the basis for classifying noise exposure into the following categories based on the L_{10} measured directly outside of Projected Development Site 1.

If the measured noise levels exceed the marginally acceptable level of 70.0 dB(A), a significant impact could occur unless the building design provides a composite building attenuation that would be sufficient to reduce these levels to an acceptable interior noise level, as indicated in **Table 2.11-4.**

Table 2.11-4 Attenuation Values to Achieve Acceptable Interior Noise Levels

	Marginally Unacceptable				Clearly Unacceptable
Noise Level with Proposed Action	$70 < L_{10} \leq 73$	$73 < L_{10} \leq 76$	$76 < L_{10} \leq 78$	$78 < L_{10} \leq 80$	$80 < L_{10}$
Attenuation[1]	(I) 28 dB(A)	(II) 31 dB(A)	(III) 33 dB(A)	(IV) 35 dB(A)	$36 + (L_{10} - 80)^2$ dB(A)

Source: *CEQR Technical Manual*

Notes:

[1] The above composite window-wall attenuation values are for residential dwellings. Commercial and office spaces/meeting rooms would be 5 dB(A) less in each category. All the above categories require a closed window situation and hence an alternate means of ventilation.
[2] Required attenuation values increase by 1 dB(A) increments for L_{10} values greater than 80 dBA.

The maximum L_{10} measured at monitoring Location 1 was 69.8 dB(A) during the AM peak period. The maximum L_{10} measured at monitoring Location 2 was 69.2 during the off-peak period. Therefore, the noise levels at both of the noise measurement locations within the rezoning area fall within the "Marginally Acceptable" range. However, the existing L_{10} noise levels at the Location 1 are expected to increase to 70.0 db(A) by the 2023 build year due to No-Action background traffic growth. The existing L_{10} noise levels at Location 2, on Pacific Street, are not expected to increase to 70.0 db(A).

Thus, in accordance with DEP requirements, a 28 dB(A) window-wall noise attenuation would be required to achieve an acceptable interior noise level at the proposed residential uses located on Classon Avenue and also at the proposed residential uses located on Pacific Avenue within 100 feet of Classon Avenue (see **Figure 2.11-1**). This level of attenuation could be achieved with a closed-window situation and alternate means of ventilation, such as indoor air conditioning, heat pumps or split systems.

It is assumed that an (E) designation for noise would be placed on Projected Development Sites 3 and 4, and on the portions of Potential Development Site 1 that are either located along Classon Avenue (i.e., Lot 53) or are within 100 feet (i.e., Lot 47). No window-wall attenuation is recommended for Projected Development Site 1 (Lots 32 and 42), Projected Development Site 2 (Lot 45), or the Lot 46 portion of Potential Development Site 1. The text of the (E) designation would be as follows:

> ***In order to ensure an acceptable interior noise environment, future residential/commercial uses must provide a closed window condition with a minimum of 28 dBA window/wall attenuation in order to maintain an interior noise level of 45 dBA. In order to maintain a closed-window condition, an alternate means of ventilation must also be provided.***

With the implementation of this (E) designation, no significant adverse impacts related to noise would occur. Therefore, the proposed action would not result in significant adverse noise impacts, and further assessment is not warranted.

Figure 2.11-1 Recommended Widow-Wall Attenuation

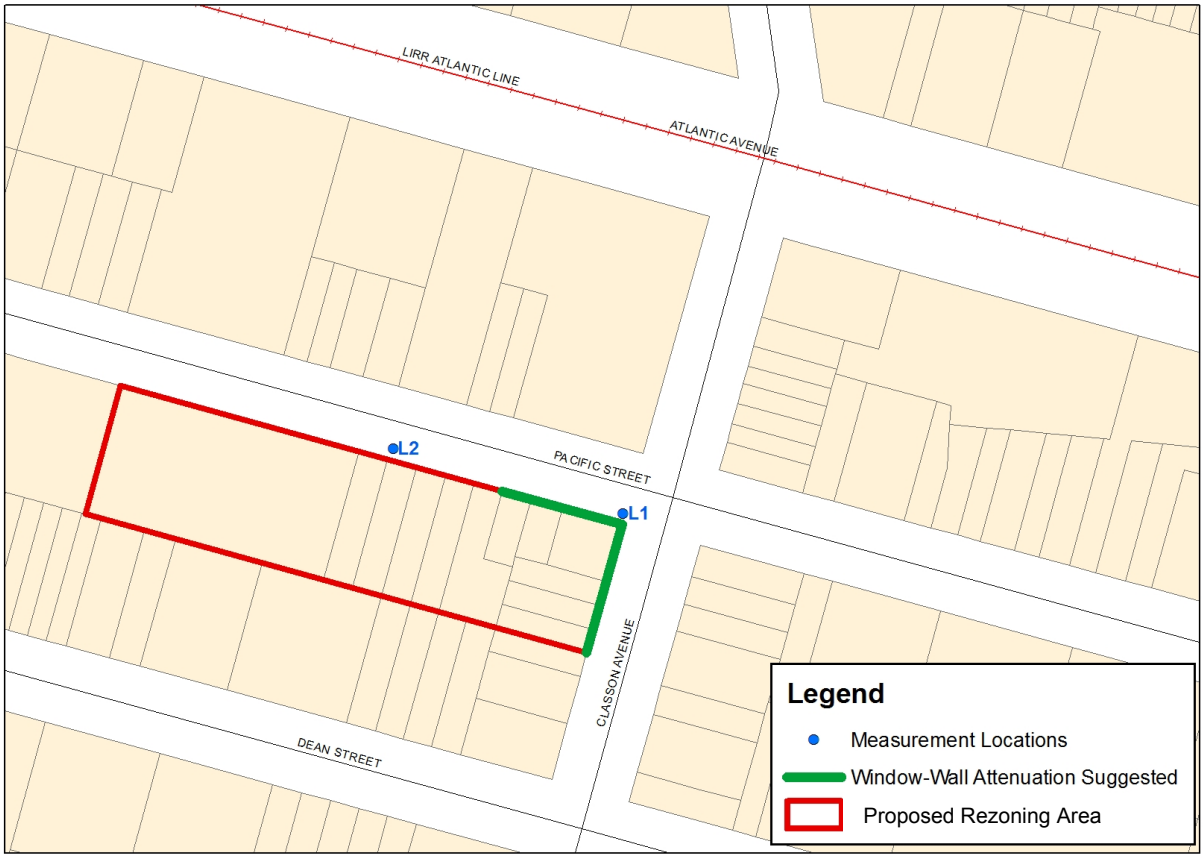

2.11.2 Stationary Sources

The *CEQR Technical Manual* states that based upon previous studies, unless existing ambient noise levels are very low and/or stationary source levels are very high (and there are no structures that provide shielding), it is unusual for stationary sources to have significant impacts at distances beyond 1,500 feet. A detailed analysis may be appropriate for projects that would cause a substantial stationary source (i.e., unenclosed mechanical equipment for manufacturing or building ventilation purposes, playground, etc.) be operating within 1,500 feet of a receptor, with a direct line of sight to that receptor; or introduce a receptor in an area with high ambient noise levels resulting from stationary sources, such as unenclosed manufacturing activities or other loud uses. Machinery, mechanical equipment, heating, ventilating and air-conditioning units, loudspeakers, new loading docks, and other noise associated with building structures may also be considered in a stationary source noise analysis. Impacts may occur when a stationary noise source is near a sensitive receptor, and is unenclosed.

Although the rezoning area is located in an existing manufacturing district, the greater project area includes residential uses with a mix of enclosed commercial, storage and/or light manufacturing uses. No unenclosed stationary noise sources of concern were observed during field inspection. As the projected development sites are not subject to high ambient noise levels from a nearby stationary source, no stationary source noise impacts from surrounding uses are anticipated. In addition, as the proposed action would not introduce a new stationary noise source, it would not result in a significant adverse stationary source impacts. Therefore, no significant adverse stationary source noise impacts are anticipated, and no further analysis is warranted.

2.12 NEIGHBORHOOD CHARACTER

Neighborhood character, as defined in the *CEQR Technical Manual,* is considered to be an amalgam of the various elements that give a neighborhood its distinct personality. These elements include land use, socioeconomic conditions, historic and cultural resources, urban design and visual resources, transportation, noise, open space and shadows, as well as any other physical or social characteristics that help to define a community. Not all of these elements affect neighborhood character in all cases; a neighborhood usually draws its distinctive character from a few defining features.

According to the *CEQR Technical Manual,* if a project has the potential to result in any significant adverse impacts on any of the above technical areas, a preliminary assessment of neighborhood character may be appropriate. A significant impact identified in one of these technical areas is not automatically equivalent to a significant impact on neighborhood character; rather, it serves as an indication that neighborhood character should be examined.

In addition, depending on the project, a combination of moderate changes in several of these technical areas may potentially have a significant effect on neighborhood character. As stated in the *CEQR Technical Manual*, a "moderate" effect is generally defined as an effect considered reasonably close to the significant adverse impact threshold for a particular technical analysis area. When considered together, elements may have the potential to significantly affect neighborhood character. Moderate effects on several elements may affect defining features of a neighborhood and, in turn, a pedestrian's overall experience. If it is determined that two or more categories may have potential 'moderate effects' on the environment, CEQR states that an assessment should be conducted to determine if a project would result in a combination of moderate effects to several elements that cumulatively may affect neighborhood character. If a project would result in only slight effects in several analysis categories, then further analysis is generally not needed.

This section reviews the defining features of the neighborhood and examines the proposed action's potential to affect the neighborhood character of the surrounding study area. The study area is generally coterminous with the 400-foot study area used for the land use and zoning analysis in Section 2.1. The impact analysis of neighborhood character that follows below focuses on the three technical areas that collectively define the character of this Prospect Heights neighborhood: land use and zoning; transportation, and urban design.

The assessment begins with a review of existing conditions and the neighborhood of the study area. The information is drawn from the preceding sections of this EAS, but is presented in a more integrated way. While the other sections present all relevant details about particular aspects of the environmental setting, the discussion for neighborhood character focuses on a limited number of important features that gives the neighborhood its own sense of place and that distinguish them from other parts of the city. A concise discussion of the changes anticipated by the 2023 analysis year under the Future No-Action Condition is then included. A brief overview of the proposed action is then presented, along with an analysis of whether any anticipated significant adverse impacts and moderate adverse effects would adversely affect any of the neighborhood's defining features.

2.12.1 Existing Conditions

Land Use and Zoning

The existing land uses in the area immediately surrounding the proposed rezoning area are a mix of warehouse/distribution, commercial, community facility, and non-conforming residential uses. The commercial uses comprise restaurant supplies, auto-oriented commercial and some local retail. The prevailing built form of the area is a mix of low to mid-rise non-residential buildings and three-to four-story residential buildings. A majority of the subject Block 1133 is vacant.

The rezoning area is located on Pacific Street, between Grand and Classon Avenues, which generally consist of industrial and commercial buildings, as well as vacant lots and parking area. The projected residential and community facility development would occur on Block 1133, Lots 32 and 42, which is presently improved with a two-story, approximately 23,180 square-foot warehouse (Lot 32) and accessory parking lot (Lot 42).

Two multi-family residential buildings are located on the south side of Pacific Street between Projected Development Sites 1 and 2. Directly to the south are several parking lots, improved by a commercial-use building. A large vacant lot lies immediately west of Projected Development Site 1, which occupies much of Block 1133. Directly to the north of the rezoning area, across Pacific Street, is a warehouse facility and several one- to two- family residential buildings to its east and west. The northern portion of the study area is within Block 1125, which is occupied mostly by multi-family residential buildings, as well as several industrial buildings.

The southern portion of the study area is within Block 1141, which is occupied mostly by industrial, and low-rise multi-family residential buildings, as well as a few vacant lots. There is a community facility building with an accessory parking lot on the southeast corner of the intersection between Grand Avenue and Dean Street, and an additional community facility located on the northwest corner of the intersection between Classon Avenue and Bergen Street.

The rezoning area and majority of the study area are located within an M1-1 zoning district. The M1-1 district is a light-performance and low-density manufacturing zoning district in which Use Groups 4 to 14, 16 and 17 are allowed. Light industries typically found such zoning districts include woodworking shops, auto shops and wholesale service and storage facilities. Offices and most retail uses are also permitted, as are certain community facilities as-of-right or by special permit. M1-1 districts permit an FAR for manufacturing and commercial uses of up to 1.0, and an FAR for community facilities up to a 2.4.

South of Dean Avenue, a portion of the 400-foot study area is zoned R6A. The R6A district is a medium-density contextual residential district that mandates the Quality Housing Program for new residential buildings. The Quality Housing Program establishes bulk regulations that set height limits and allow high lot coverage buildings that are set at or near the street line. Quality Housing buildings must also have amenities related to the planting of trees, landscaping and recreation space. R6A zoning districts permit a maximum Floor Area Ratio (FAR) of 3.0 for residences and community facilities. The base height of a building before a ten-foot setback is between 40 and 60 feet, with a maximum building height of 70 feet. All open areas between the street wall and front lot line must be planted.

An additional portion of the study area south of Bergen Street is zoned R6B, which often has traditional row-houses and attempts to preserve the scale and harmonious streetscape of neighborhoods. The FAR of 2.0 and the mandatory Quality Housing regulations also accommodate apartment buildings at a similar four- to five-story scale. The base height of a new building before setback must be between 30 and 40 feet, with a maximum

height of 50 feet. A C2-4 commercial overlay is mapped over the R7A district that lies north of Atlantic Avenue and west of Classon Avenue. The C2-4 overlay district allows a wide range of uses, including neighborhood grocery stores, restaurants, beauty parlors, funeral homes and local repair shops. The maximum commercial FAR is 2.0 when mapped within R6-R10 zoning districts.

An area north of the rezoning area is also mapped with an R7A zoning district. The contextual Quality Housing regulations, which are mandatory in R7A districts, typically produce high lot coverage, seven- and eight-story apartment buildings, blending with existing buildings in many established neighborhoods. The FAR in R7A districts is 4.0. Above a base height of 40 to 65 feet, the building must set back to a depth of 10 feet on a wide street and 15 feet on a narrow street before rising to a maximum height of 80 feet.

Transportation

The surrounding roadway network currently contains sufficient traffic on area roadways. Within the study area, Atlantic Avenues has a functional classification as “Principal Arterial (other)” roadways under the National Highway System (NHS). South of the rezoning area, Dean Street has a functional classification as a “Major Collector” roadway, as does Bergen Street, further south and Classon Avenue abutting the rezoning area to the east. Within the study area, Atlantic Avenue is a designated “Through Truck Route” by NYCDOT.

Urban Design

The architecture throughout the study area is eclectic, with no unity of form to tie the built environment together visually. The study area is characterized by a mix of land uses, including general industrial manufacturing uses, warehouses, auto-repair, tenement style multi-family residential apartment buildings, stores, one-story commercial uses, and parking lots. Residences within the area are generally one- to two-family or multi-family buildings with heights averaging between 30 and 40 feet and an FAR around 3.0. Most buildings within the study area are arranged regular (parallel) with respect to their lot placement. Buildings are generally built out to their lot lines. Residential and mixed-use buildings are often attached to one another, as opposed to free-standing detached buildings.

There are few streetscape elements within the study area. Along Pacific Street, there are a few scattered trees on what otherwise is a deteriorated streetscape with erupted and uneven sidewalks, scattered industrial-oriented street lighting, and little in the way of visual interest. The Classon Avenue pedestrian environment is generally void of street trees, street amenities and pedestrian-oriented lighting. The pedestrian experience is affected by industrial uses in the study area, as the sidewalk is interrupted by industrial access point to the garage entry ways that line the street.. No other notable streetscape elements (e.g. benches), lighting, or any form of pocket parks or green streets are located within the study area.

The street hierarchy of the study area includes several different functional classifications. Atlantic Avenue is classified as a Principal Arterial Roadway under the Surface Transportation Program, while Dean and Bergen Streets are classified as Major Collector Roadways. To the east of the rezoning site Classon Avenue is a minor collector. All other roadways in the study area are classified as local. No natural features or community features lie within the study area other than the very smallest fringe of Lefferts Street Association Community Garden, which is separated by two blocks and Atlantic Avenue.

2.12.2 Future No-Action Condition

Under the Future No-Action Condition, the proposed action would not occur, and it is expected that the existing uses within the rezoning area would remain in their current form.

Significant changes to the study area are not expected by the final analysis year of 2023. Under the Future No-Action Condition, it is expected that while tenants within surrounding area buildings may change, the overall use of these buildings within the study area would remain the same, and any physical changes to buildings in the study area would comply with designated zoning regulations and other surrounding districts.

2.12.3 Future With-Action Condition

The elements that comprise of neighborhood character are reviewed individually below, and followed by supporting and cumulative conclusion at the end of this chapter.

Land Use, Zoning, and Public Policy

According to the *CEQR Technical Manual*, development resulting from a proposed action could alter neighborhood character if it introduces new land uses, conflicts with land use policy or other public plans for the area, changes land use character, or generates significant land use impacts.

Under the With-Action Scenario, the proposed rezoning would amend the zoning map to change the existing M1-1 district to an R7D district with a C2-4 commercial overlay. On Projected Development Site 1, this action would facilitate a reasonable worst-case development scenario with a maximum building height of 115 feet and a maximum developable floor area of 159,352 gsf. The RWCDS assumes that this maximum developable floor area would be split between 130,896 gsf of residential use with 154 units, 30 percent (46 units) of which would be classified as affordable, and 28,456 gsf of commercial uses on the bottom floor. The proposed action would apply to ten additional tax lots under the Future With-Action Scenario, five of which are projected to be redeveloped as a result of the proposed action. These additional projected development sites include Projected Development Site 2 (Lot 45), Projected Development Site 3 (Lots 48 and 49), and Projected Development Site 4 (Lots 51 and 52). These sites are projected to be developed with an additional 50,094 gsf of residential floor area with 59 units, of which approximately 18 would be affordable. In addition, these sites would experience a net increase in commercial floor area of 10,890 gsf.

Under the With-Action Scenario, the existing warehouse and commercial buildings on the projected development sites would be demolished to accommodate new construction. The Future With-Action Condition would result in the loss of 25,930 gsf of industrial/manufacturing space and 1,200 gsf of transportation/utility space, and the redevelopment of 3,890 gf of existing commercial space currently on Lots 48 and 49. Overall, the With-Action Scenario is expected to result in the addition of 213 residential units to the project area, of which approximately 64 units would be classified as affordable.

Recent years have seen some commercial, residential and community facility development in proximity to the rezoning area, with several non-conforming residential uses within 400 feet of the rezoning area. The proposed action would reinforce this trend towards a more active residential mixed-use neighborhood, which are common in the residential areas south of the rezoning area. Therefore, the proposed action is not expected to have any adverse impacts on surrounding land uses.

Transportation

According to the *CEQR Technical Manual*, changes in traffic and pedestrian conditions can affect neighborhood character in a number of ways. For traffic to have an effect on neighborhood character, it must be a contributing element to the character of the neighborhood (either by its absence or its presence), and it must change substantially as a result of the action. According to the *CEQR Technical Manual*, such substantial traffic changes can include: changes in level of service (LOS) to C or below; change in traffic patterns; change in roadway classifications; change in vehicle mixes, substantial increase in traffic volumes on residential streets; or significant traffic impacts, as identified in the technical traffic analysis. Regarding pedestrians, when a proposed project would result in substantially different pedestrian activity and circulation, it has the potential to affect neighborhood character.

The proposed action would not lead to an increase of 50 or more vehicle trips at any one intersection in the vicinity of the projected development sites. Therefore, the proposed action would not lead to any significant adverse traffic impacts. Additionally, the proposed action would not lead to an increase of 200 or more public bus trips, and the nearby Franklin Avenue subway station is not projected to experience an increase of 200 or more subway trips. Therefore, the proposed action would not lead to any significant adverse subway or bus impacts.

The results of the pedestrian LOS analyses indicate that no significant adverse pedestrian impacts are projected to occur as a result of the proposed action. Furthermore, neither of the study intersections—Classon Avenue/Pacific Street and Grand Avenue/Pacific Street—are classified as “high crash locations” based on *CEQR Technical Manual* criteria.

Due to the location of the projected development sites within the *CEQR Technical Manual* Parking Zone 2, the proposed action’s future parking demands are not considered significant due to the magnitude of available alternative modes of transportation, including frequent transit services (i.e., subway and bus). Therefore, no significant adverse parking impacts are projected.

Urban Design and Visual Resources

Projected Development Site 2 is a 2,750 sf lot currently improved with a one-story, approximately 20-foot-high garage and currently has a maximum FAR of 2.4. The Future With-Action RWCDS assumes that this site would be redeveloped with a115-foot-tall, mixed-use building including 13,915 gsf (12,650 zsf) of residential floor area (4.6 FAR) and 2,750 square feet of commercial floor area (1.0 FAR).

Projected Development Site 3 is located on a 3,890 square-foot combined lot and is currently improved with a one story auto supply commercial land use. It is assumed that this site would be redeveloped as a mixed-use development including 19,683 gsf (17,894 zsf) of residential floor area (4.6 FAR) and 4,279 gsf (3,890 zsf) of commercial floor area (1.0 FAR). It is also assumed that the building would be constructed to the maximum allowable height of 115 feet in an R7D district.

Projected Development Site 4 is situated on a 3,260 square-foot combined lot facing Classon Avenue nd is currently improved with a parking lot on Lot 51 and a two-story, single-car garage on Lot 52. The With-Action Scenario assumes that this site would be redeveloped with a 115-foot building containing approximately 16,496 gsf (14,996 zsf) of residential floor area (4.6 FAR) and 3,586 gsf (3,260 zsf) of commercial floor area (1.0 FAR). The building height and mass that may result from the projected

redevelopment on Classon Avenue, although distinct, would not obstruct or alter any existing pedestrian views or adversely impact existing community character.

Potential Development Site 1 (Block 1133, Lots 46, 47 and 53) is currently improved with a two-story, 1.59 FAR industrial/manufacturing building (Lot 46); a three-story, 1.15 FAR residential building with four dwelling units (Lot 47), and a two-story 1.94 FAR industrial building (Lot 53). It is anticipated that the proposed action would result in a 115-foot-tall mixed-use building comprised of approximately 36,078 gsf (32,798 zsf) of residential floor area (4.6 FAR) and 7,843 gsf (7,130 zsf) of commercial floor area (1.0 FAR). Much of the building would front on Pacific Street, with a relatively small portion fronting on Classon Avenue. The proposed building would not obstruct or alter any existing pedestrian views or community amenities or adversely impact any existing community character, and is expected to result in an improved streetscape and pedestrian experience.

The proposed action would not diminish or disturb the existing aesthetic continuity, pedestrian features of the community or neighborhood, and as the proposed action would not block any view corridors or views to/from any natural areas with rare or defining features, nor would the proposed action impact an historical or culturally sensitive community features. The redevelopment that may occur din the Future With-Action Condition would result in an improved streetscape and pedestrian experience. Therefore the proposed action is not expected to result in any significant adverse urban design or visual resource related impacts.

Conclusions

Of the relevant technical areas specified in the *CEQR Technical Manual* that comprise of neighborhood character, the proposed action would not cause significant adverse impacts regarding land use, zoning, and public policy; open space; shadows; historic and cultural resources; urban design and visual resources; transportation or noise. Moderate adverse effects that would potentially impact such a defining feature, either singly or in combination, have also not been identified for more than one technical area. Therefore, as the proposed action would not have a significant adverse neighborhood character impact and would not result in a significant adverse impact to a defining feature of the neighborhood, further analysis is not necessary.

2.13 CONSTRUCTION

Construction, although temporary, can result in disruptive and noticeable effects on the area surrounding a development site. A determination of the significance of construction and the need for mitigation is based on the duration and magnitude of these effects. Per *CEQR Technical Manual* guidance, construction is typically of greatest importance when it could affect traffic conditions, archaeological resources, the integrity of historic resources, community noise patterns and air quality conditions.

The proposed action involves a rezoning in the Prospect Heights section of Brooklyn. Including the site controlled by the Applicant, there are four projected development sites and one potential development site in the rezoning area. The duration of construction on the Applicant's site is expected to last between 16 and 20 months following the adoption of the proposed rezoning, the remaining projected development sites are anticipated to be developed in the four years following the adoption. The potential development site is considered less likely to be developed over the four-year analysis period. The construction period for each projected development site would range between 16 and 20 months. It is conservatively assumed that the four sites would be developed by the analysis year of 2023.

As construction induced by the proposed action would be gradual, taking place over a four-year period, potential impacts would be minimal and, as discussed below, not expected to have any significant adverse impacts. The following is a brief discussion of the effects associated with the construction related activities on traffic, air quality, noise, historical resources and hazardous materials resulting from the construction of the projected development sites as described above in Section 1.5.

2.13.1 Effect of Construction on Traffic

The proposed action would result in new development, over a four-year period, on up to four projected development sites. These developments would replace existing uses on the development sites. During construction, the projected development sites would generate trips from workers traveling to and from the construction sites, and from the movement of materials and equipment.

The infrastructure of New York City is comprised of physical systems that support the population, including water supply, wastewater, sanitation, energy, roadways, bridges, tunnels, and public transportation. This section covers only the effect of the proposed action on traffic operations. Given typical construction hours of 7:00 AM to 4:00 PM, worker trips would be concentrated in off-peak hours typically before both the AM and PM peak commuter periods. Truck movements typically would be spread throughout the day on weekdays, and would generally occur between the hours of 7:00 AM and 4:30 PM. Traffic generated by construction workers traveling to and from their work sites and construction truck traffic would not represent a substantial increment during the area's peak travel periods.

Construction activities may result in short-term disruption of both traffic and pedestrian movements at the development sites. This would occur primarily due to the temporary loss of curbside lanes from the staging of equipment and the movement of materials to and from the site. Additionally, construction would at times result in the temporary closing of sidewalks adjacent to the site. These conditions would not lead to significant adverse effects on traffic and transportation conditions.

2.13.2 Effect of Construction on Air Quality

Possible impacts on local air quality during construction induced by the proposed action include fugitive dust (particulate) emission from land clearing operation and demolition as well as mobile source emissions (hydrocarbons, nitrogen oxide, and carbon monoxide) generated by construction equipment and vehicles.

Fugitive dust emissions from land clearing operations can occur from excavation, hauling, dumping, spreading, grading, compaction, wind erosion, and traffic over unpaved areas. Actual quantities of emissions depend on the extent and nature of the clearing operations, the type of equipment employed, the physical characteristics of the underlying soil, the speed at which construction vehicles are operated, and the type of fugitive dust control methods employed. Much of the fugitive dust generated by construction activities should be of a short-term duration and relatively contained within a proposed site, not significantly impacting nearby buildings or residents. All appropriate fugitive dust control measures – including watering of exposed areas and dust covers for trucks – would be employed during construction of the development sites. Therefore, the fugitive source emissions generated by the proposed action would not be significant.

Mobile source emissions may result from the operation of construction equipment, trucks delivering materials and removing debris, workers' private vehicles, or occasional disruptions in traffic near the construction site. As the number of construction-related vehicle trips generated by the proposed action

would be relatively small and the emissions from such vehicles as well as construction equipment would occur over a four-year period and be dispersed throughout the proposed rezoning area, the mobile source emissions generated by the proposed action would not be significant. Overall, the proposed action would not have the potential to result in significant adverse air quality impacts.

2.13.3 Effect of Construction on Noise

Noise and vibration from construction equipment operation and noise from construction workers' vehicles and delivery vehicles traveling to and from the construction sites can affect community noise levels. The level of impact of these noise sources depends on the noise characteristics of the equipment and activities involved the construction schedule, and the location of potentially sensitive noise receptors.

Noise and vibration levels at a given location are dependent on the kind and number of pieces of construction equipment being operated, as well as the distance of the location from the construction site and the types of structures, if any, between the location and the noise source. Noise levels caused by construction activities can vary widely, depending on the phase of construction (e.g. demolition, land clearing and excavation, foundation, erection of structure, construction of exterior walls) and the specific task being undertaken.

Construction noise associated with the proposed action is expected to be similar to noise generated by other residential construction projects in the city. Increased noise level caused by construction activities can be expected to be more significant during early excavation phases of construction and would be of relatively short duration. Increases in noise levels caused by delivery trucks and other construction vehicles would not be significant.

Construction noise is regulated by the New York City Noise Control Code and by Environmental Protection Agency noise emission standards for construction equipment. These local and federal requirements mandate that certain classifications of construction equipment and motor vehicles meet specified noise emissions standards; that, except under exceptional circumstances, construction activities be limited to weekdays between the hours of 7:00 AM and 6:00 PM; and that construction material be handled and transported in such a manner as not to create unnecessary noise. In addition, whenever possible, appropriate low noise emission level equipment and operational procedures can be utilized to minimize noise and its effect on adjacent uses.

Thus, while there may be short periods of time when noise is greater than the Noise Control Code, these regulations would be followed in such a matter that no significant adverse noise impacts would be expected to result from the proposed action.

Effect of Construction on Historic Resources

In order to determine whether the projected development has the potential to affect nearby off-site historic or architectural resources, the study area was screened for historic and architectural resources. No historic or architectural resources were identified within the 400-foot study area. Therefore, adverse construction-related impacts are not expected to any historic resource in the vicinity of the rezoning area.

Effect of Construction on Hazardous Materials

The proposed action would result in new development in the rezoning area. As such, a hazardous materials assessment was undertaken, as presented Section 2.7 of this EAS. As discussed in the

section, all contaminants and contaminated materials are expected to be removed in accordance with environmental regulations and no significant adverse impacts are expected.

Conclusion

Construction-related activities are not expected to have any significant adverse impacts on traffic, air quality, noise, historic resources, or hazardous materials conditions as a result of the proposed action.

APPENDICIES TO SUPPLEMENTAL STUDIES TO THE EAS

Appendix A:
Site Plans and Zoning Analysis from the Project Architect

1010 PACIFIC STREET

BROOKLYN, NEW YORK

ULURP DRAWING SET



DRAWING LIST

PAGE	DRAWIN	DRAWING TITLE
1	T-000.00	Title Sheet
2	Z-100.00	Zoning/Tax Maps & Base Plane Calc.
3	Z-101.00	Site Survey
4	Z-102.00	Zoning Analysis
5	Z-103.00	Zoning Analysis (Continued)
6	Z-104.00	Site Plan
7	Z-105.00	Zoning Floor Area
8	Z-106.00	Zoning Floor Area
9	Z-107.00	Zoning Floor Area
10	Z-108.00	Enlarged Site Plan
11	Z-109.00	Zoning Diagram
12	Z-200.00	Longitudinal Section
13	Z-201.00	Cross Section 1
14	Z-202.00	Cross Section 2
15	Z-203.00	Cross Section 3
16	A-301.00	Cellar Floor Plan
17	A-302.00	Ground Floor Plan
18	A-303.00	2nd Floor Plan
19	A-304.00	3rd Floor Plan
20	A-305.00	4th Floor Plan
21	A-306.00	5th Floor Plan
22	A-307.00	6th Floor Plan
23	A-308.00	7th Floor Plan
24	A-309.00	8th Floor Plan
25	A-310.00	9th Floor Plan
26	A-311.00	10th Floor Plan
27	A-312.00	11th Floor Plan

NOTE: PLANS, SECTIONS AND DIAGRAMS ARE ILLUSTRATIVE AND SUBJECT TO CHANGE PENDING FUTURE BUILDING PERMIT APPLICATION.

STUDIO V ARCHITECTURE

1010 PACIFIC STREET NO. 15006

1010 Pacific Street
Brooklyn, NY 11238

OWNER / CLIENT

AVO CONSTRUCTION
65 Vestry Street
New York, NY 10013

ARCHITECT

STUDIO V ARCHITECTURE, PLLC
44 E 32nd Street New York NY 10016
T212.779.2288 F212.689.1325

CONSULTANTS

LAND USE ATTORNEY/ Sheldon Lobel, P.C.
18E 42st Street, New York, NY 10017
T 212.725.2727 F 212.725.3910

ENVIRONMENTAL CONSULTANT/ AECOM
100 Park Avenue, New York, NY 10017
T 212.708.6800

PUBLIC RELATIONS / DOMENIC RECCHIA
172 Gravesend Neck Rd, Brookly, NY 11223
T 718.336.5550

INCLUSIONARY HOUSING CONSULTANT/
BEST DEVELOPMENT GROUP
111 North Central Avenue Ste 425, Hartsdale, NY 10530
T 914.472.0180

DATE	DRAWN BY	CHECKED BY
08.15.2018	LC	JV

SHEET TITLE

TITLE

SCALE

NONE

N

SHEET NO.

T-100.00

All ideas, design, arrangements and plans indicated or represented by this drawing are owned by, and are the property of STUDIO V Architecture PLLC. and were created, evolved, and developed for use on, and in connection with the specified project. None of such ideas, arrangements or plans shall be used by or disclosed to any person, firm or corporation for any purpose whatsoever without the written permission of STUDIO V Architecture PLLC. Written dimensions on this drawing shall have precedence over scaled dimensions. Contractors shall verify, and be responsible for all dimensions and conditions in the field and must notify STUDIO V Architecture, PLLC. of any deviation from dimensions and conditions depicted in these drawings. © 2018 STUDIO V Architecture, PLLC. All rights reserved.



2 TAX MAP
NO SCALE

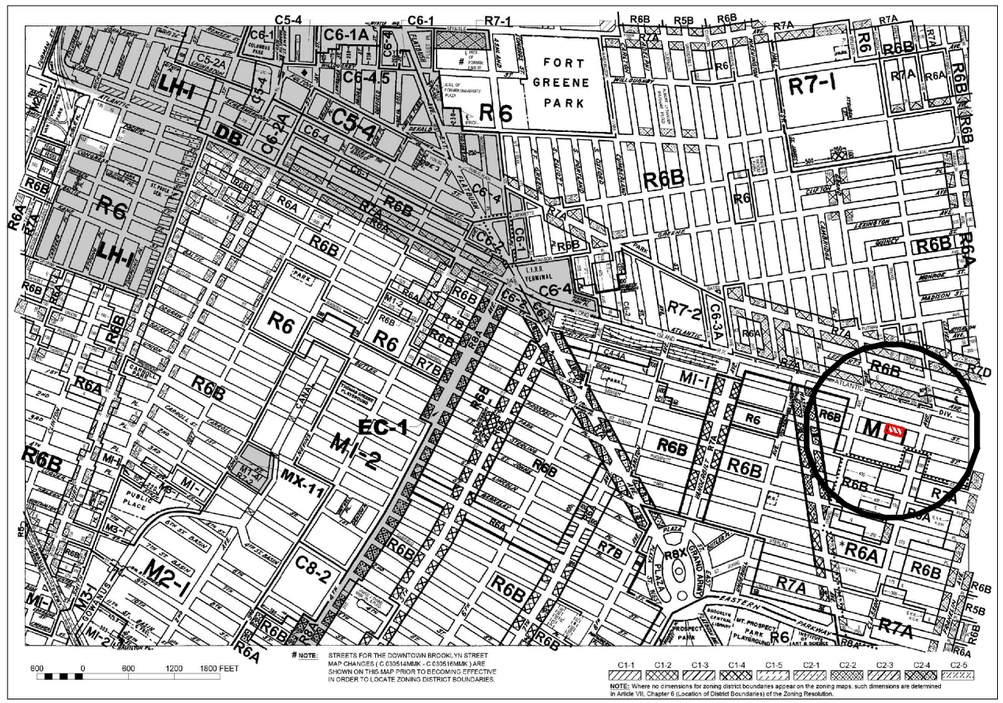

1 ZONING MAP
NO SCALE

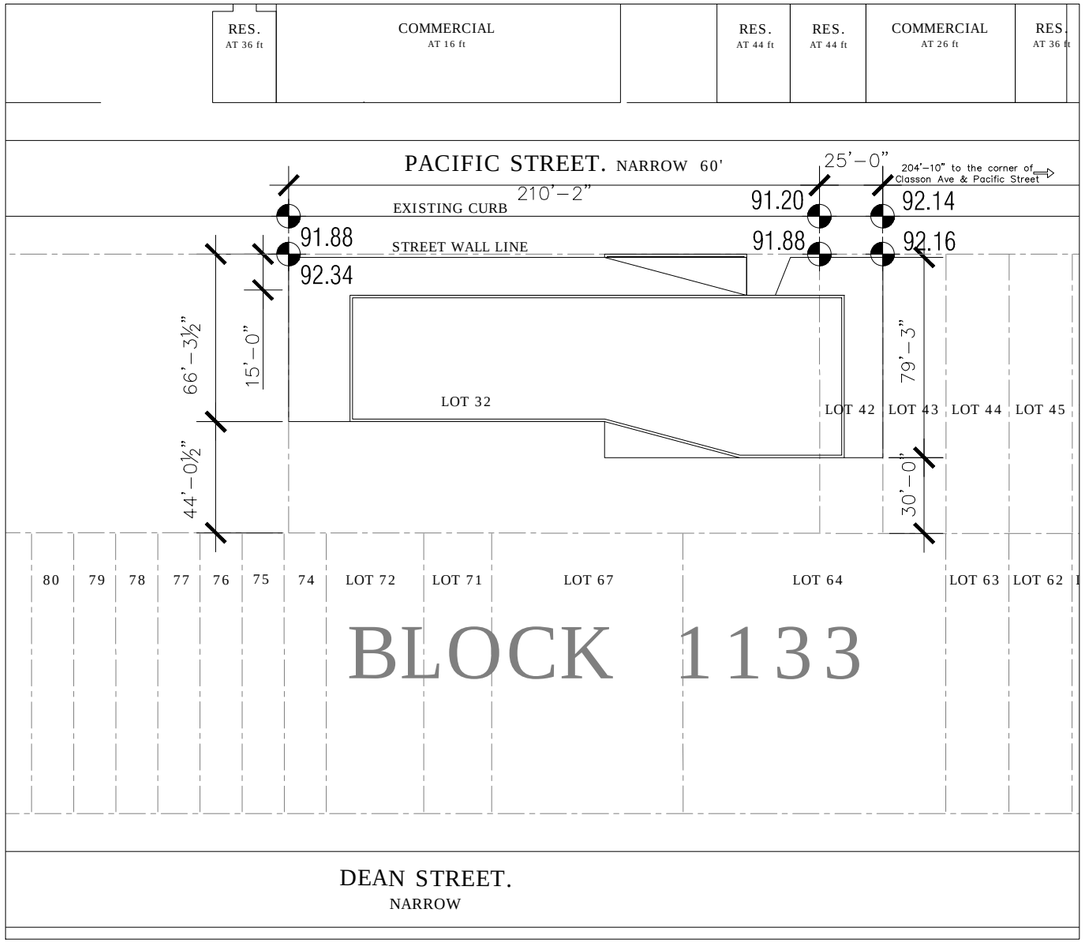

3 SITE PLAN
1" = 60'-0"

BASE PLANE CALCULATIONS FOR MERGED LOT 32 & LOT 42

LOT	AVERAGE CURB LEVEL	LOT AVERAGE	STREET FRONTAGE	% OF TOTAL STREET FRONT	CALCULATED CURB LEVEL OF MERGED LOT	AVERAGE STREET WALL ELEVATION	LOT AVG.	STREET FRONTAGE	% OF TOTAL STREET FRONT	CALCULATED STREET WALL LINE LEVEL OF MERGED LOT
INTERIOR LOT 32	(91.88 + 91.14) / 2	91.51	210'	89.36 %	81.77	(92.34 + 91.88) / 2	92.11	210'	89.36%	82.31
INTERIOR LOT 42	(91.14 + 90.98) / 2	91.06	25'	10.64%	9.69	(91.88 + 92.16) / 2	92.02	25'	10.64%	9.79
TOTAL	CALCULATED CURB LEVEL FOR MERGED LOT :				91.46'	CALCULATED STREET WALL ELEVATION FOR MERGED LOT				92.10'
ESTABLISHED BASE PLANE PER ZR 12-10	BASE PLANE = ANY ELEVATION BETWEEN CURB LEVEL (91.46') AND STREET LEVEL ELEVATION (92.10') => 92.10'									

4 BASE PLANE CALCULATION
NO SCALE

NOTE: PLANS, SECTIONS AND DIAGRAMS ARE ILLUSTRATIVE AND SUBJECT TO CHANGE PENDING FUTURE BUILDING PERMIT APPLICATION.

STUDIO V ARCHITECTURE

1010 PACIFIC STREET NO. 15006

1010 Pacific Street
Brooklyn, NY 11238

OWNER / CLIENT
AVO CONSTRUCTION
65 Vestry Street
New York, NY 10013

ARCHITECT
STUDIO V ARCHITECTURE, PLLC
44 E 32nd Street New York NY 10016
T212.779.2288 F212.689.1325

CONSULTANTS

LAND USE ATTORNEY/ Sheldon Lobel, P.C.
18E 42st Street, New York, NY 10017
T 212.725.2727 F 212.725.3910

ENVIRONMENTAL CONSULTANT/ AECOM
100 Park Avenue, New York, NY 10017
T 212.708.6800

PUBLIC RELATIONS / DOMENIC RECCHIA
172 Gravesend Neck Rd, Brookly, NY 11223
T 718.336.5550

INCLUSIONARY HOUSING CONSULTANT/
BEST DEVELOPMENT GROUP
111 North Central Avenue Ste 425, Hartsdale, NY 10530
T 914.472.0180

DATE	DRAWN BY	CHECKED BY
08.15.2018	LC,GF	JV

SHEET TITLE
ZONING & TAX MAPS AND BASEPLANE CALCULATION

SCALE
NO SCALE

N

SHEET NO.
Z-100.00

All ideas, design, arrangements and plans indicated or represented by this drawing are owned by, and are the property of STUDIO V Architecture PLLC. and were created, evolved, and developed for use on, and in connection with the specified project. None of such ideas, arrangements or plans shall be used by or disclosed to any person, firm or corporation for any purpose whatsoever without the written permission of STUDIO V Architecture PLLC. Written dimensions on this drawing shall have precedence over scaled dimensions. Contractors shall verify, and be responsible for all dimensions and conditions in the field and must notify STUDIO V Architecture, PLLC. of any deviation from dimensions and conditions depicted in these drawings. © 2018 STUDIO V Architecture, PLLC. All rights reserved.

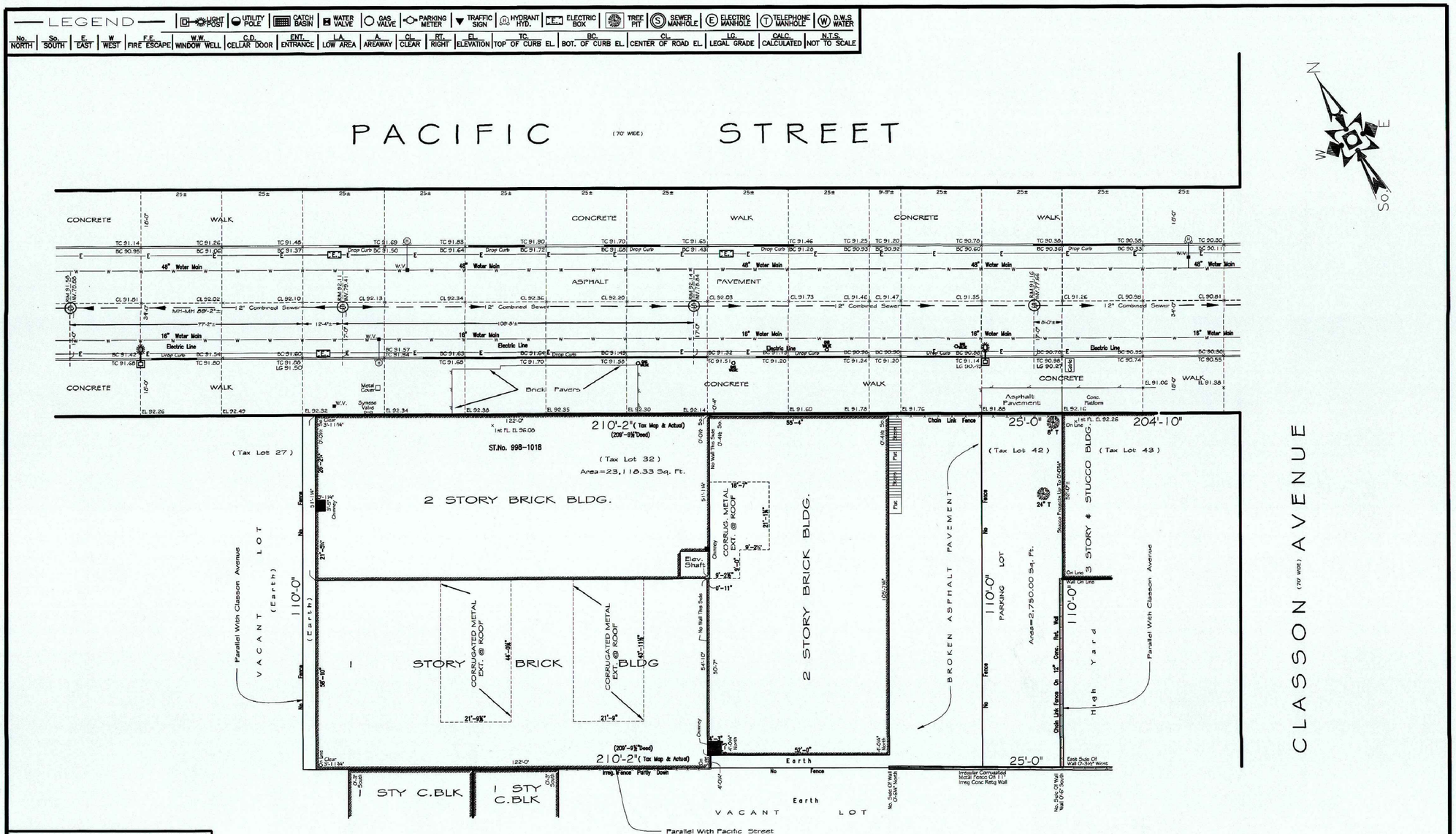

UNAUTHORIZED ALTERATIONS OR ADDITIONS TO THIS SURVEY IS A VIOLATION OF SECTION 7209 OF THE NEW YORK STATE EDUCATION LAW. COPIES OF THIS SURVEY MAP NOT BEARING THE LAND SURVEYOR'S INKED SEAL OR EMBOSSED SEAL SHALL NOT BE CONSIDERED TO BE A VALID TRUE COPY. GUARANTEES OR CERTIFICATIONS INDICATED HEREON SHALL RUN ONLY TO THE PERSON FOR WHOM THE SURVEY IS PREPARED, AND ON HIS BEHALF TO THE TITLE COMPANY, GOVERNMENTAL AGENCY AND LENDING INSTITUTION LISTED HEREON, AND TO THE ASSIGNEES OF THE LENDING INSTITUTION. GUARANTEES OR CERTIFICATION ARE NOT TRANSFERABLE TO ADDITIONAL INSTITUTIONS OR SUBSEQUENT OWNERS.

BLOCK 1133
LOT AS SHOWN
SECTION 4
COUNTY KINGS
DWG BY ROD.
CHKD BY

NOTE

CAUTION: BEFORE PERFORMING ANY DIGGING OR DRILLING ON THIS SITE, IT IS REQUIRED THAT SUBSURFACE SERVICES, INCLUDING THE UNDERGROUND MAINS BE MARKED AND IDENTIFIED BY THE UTILITY INVOLVED IN COMPLIANCE WITH INDUSTRIAL CODE 53 OF NEW YORK STATE.

1) ALL ELEVATIONS REFER TO NORTH AMERICAN VERTICAL DATUM OF 1988 (NAVD88) WHICH IS 1.095 FEET ABOVE NATIONAL GEODETIC SURVEY DATUM AT SANDY HOOK NEW JERSEY.
2) UNDERGROUND UTILITY INFORMATION SHOWN WAS OBTAINED FROM VARIOUS COMPANIES AND CITY AGENCIES AND IS NOT GUARANTEED FOR ACCURACY OR COMPLETENESS.
3) THIS IS TO CERTIFY THAT THERE ARE NO APPARENT STREAMS NOR NATURAL WATER COURSES IN THE PROPERTY AS SHOWN ON THIS SURVEY.

STATE OF NEW YORK VINCENT TEUTONICO LICENSED LAND SURVEYOR 050301

DATE	JOB No.	DESCRIPTION
1-07-2014	15029	ARCHITECTURAL SURVEY

APPLE SURVEYING
2390 McDONALD AVENUE
BROOKLYN NY 11223
T:718-331-0800 FAX 718-331-3380
E-MAIL: office@applesurveying.com

1 SITE SURVEY
NO SCALE

NOTE: PLANS, SECTIONS AND DIAGRAMS ARE ILLUSTRATIVE AND SUBJECT TO CHANGE PENDING FUTURE BUILDING PERMIT APPLICATION.

STUDIO V
ARCHITECTURE

1010 PACIFIC STREET
NO. 15006

1010 Pacific Street
Brooklyn, NY 11238

OWNER / CLIENT
AVO CONSTRUCTION
65 Vestry Street
New York, NY 10013

ARCHITECT
STUDIO V ARCHITECTURE, PLLC
44 E 32nd Street New York NY 10016
T212.779.2288 F212.689.1325

CONSULTANTS
LAND USE ATTORNEY/ Sheldon Lobel, P.C.
18E 42st Street, New York, NY 10017
T 212.725.2727 F 212.725.3910

ENVIRONMENTAL CONSULTANT/ AECOM
100 Park Avenue, New York, NY 10017
T 212.708.6800

PUBLIC RELATIONS / DOMENIC RECCHIA
172 Gravesend Neck Rd, Brookly, NY 11223
T 718.336.5550

INCLUSIONARY HOUSING CONSULTANT/
BEST DEVELOPMENT GROUP
111 North Central Avenue Ste 425, Hartsdale, NY 10530
T 914.472.0180

DATE	DRAWN BY	CHECKED BY
08.15.2018	LC,GF	JV

SHEET TITLE
SITE SURVEY

SCALE
-

SHEET NO.
Z-101.00

All ideas, design, arrangements and plans indicated or represented by this drawing are owned by, and are the property of STUDIO V Architecture PLLC. and were created, evolved, and developed for use on, and in connection with the specified project. None of such ideas, arrangements or plans shall be used by or disclosed to any person, firm or corporation for any purpose whatsoever without the written permission of STUDIO V Architecture PLLC. Written dimensions on this drawing shall have precedence over scaled dimensions. Contractors shall verify, and be responsible for all dimensions and conditions in the field and must notify STUDIO V Architecture, PLLC. of any deviation from dimensions and conditions depicted in these drawings. © 2018 STUDIO V Architecture, PLLC. All rights reserved.

ZONING CALCULATIONS

1 General					
Map 32d	Zoning District(s)	Currently: M1-1 Proposed: R7D/C2-4			
Lot Area	Tax Lots	Block 1133 Lots 32 & 42			
	Lot Area	25,869 sf *			
2 Uses					
Zoning Section	**Item**	**Permitted / Required**	**Proposed**		**Compliance / Notes**
ZR 22-00	USES	UG 1-9	UG 2,4,6,9		*Complies*
3 Floor Area & Density					
		R7D / C2-4			
Zoning Section	**Item**	**Permitted / Required**	**Proposed**	**Total**	**Compliance / Notes**
ZR 23-153 ZR 23-154 (b)	FAR	**Residential**	**Residential**	5.11 + 0.30 + 0.17 =	
		4.2 Base + 1.4 I.H. Bonus =5.6 FAR	5.11 FAR	5.58 FAR	*Complies*
		Commercial	**Commercial**		*Complies*
		2.00 FAR	0.30 FAR		
		Community Facility	**Community Facility**		
		4.20 FAR	0.17 FAR		
	Floor Area	**Residential**	**Residential**	**Total**	
		5.6 FAR X 25,869 sf =	5.11 FAR X 25,869 sf =	132,266 sf + 7642 sf + 4,458 sf =	*Complies*
		144,866 sf	132,268 sf	144,368 sf	
		Commercial	**Commercial**		*Complies*
		2.00 FAR X 25,869 sf =	0.30 FAR X 25,869 sf =		
		51,738 sf	7,642 sf		
		Community Facility	**Community Facility**		*Complies*
		4.20 FAR X 25,869 sf =	0.17 FAR X 25,869 sf =		
		108,650 sf	4,458 sf		
ZR 23-22	Maximum Number of Dwelling Units	144,866 sf / 680 sf * =			
		213 DU Max.	154 Total DU (w/ 39 Inclusionary Housing Units)		*Complies*
		* Dwelling Unit Factor = 680 sf. Per DU			
ZR 23-153	Maximum Lot Coverage	65% (Interior Lot)	16,808 sf (64.97% coverage)		*Complies*
4 Bulk Regulations					
		R7D / C2-4			
Zoning Section	**Item**	**Permitted / Required**	**Proposed**		**Compliance / Notes**
ZR 23-462	Side Yards	Side Yard None required	Not provided		*Complies*
ZR 23-47	Rear Yards	30 ft. Rear Yard required	30 ft. Rear Yards provided		*Complies*
ZR 23-662(c)(1)	Initial Setback	15 ft on a narrow street	15 ft of Initial Setback provided along the enire building front.		*Complies*
ZR 23-633(d)	Minimum/Maximum Base Height	60 - 85 ft	64 - 85 ft		*Complies*
ZR 23-664	Maximum Building Height / Stories	115 ft / 11 stories*	115 ft / 11 stories		*Complies*
		* [ZR 23-664] Modified height for R7D with IH as 115' max 11 stories			

STUDIO V
ARCHITECTURE

1010 PACIFIC STREET NO. 15006

1010 Pacific Street
Brooklyn, NY 11238

OWNER / CLIENT
AVO CONSTRUCTION
65 Vestry Street
New York, NY 10013

ARCHITECT
STUDIO V ARCHITECTURE, PLLC
44 E 32nd Street New York NY 10016
T212.779.2288 F212.689.1325

CONSULTANTS
LAND USE ATTORNEY/ Sheldon Lobel, P.C.
18E 42st Street, New York, NY 10017
T 212.725.2727 F 212.725.3910

ENVIRONMENTAL CONSULTANT/ AECOM
100 Park Avenue, New York, NY 10017
T 212.708.6800

PUBLIC RELATIONS / DOMENIC RECCHIA
172 Gravesend Neck Rd, Brookly, NY 11223
T 718.336.5550

INCLUSIONARY HOUSING CONSULTANT/
BEST DEVELOPMENT GROUP
111 North Central Avenue Ste 425, Hartsdale, NY 10530
T 914.472.0180

DATE 08.15.2018 | DRAWN BY LC | CHECKED BY JV

SHEET TITLE
ZONING ANALYSIS

SCALE -

N

SHEET NO.
Z-102.00

All ideas, design, arrangements and plans indicated or represented by this drawing are owned by, and are the property of STUDIO V Architecture PLLC. and were created, evolved, and developed for use on, and in connection with the specified project. None of such ideas, arrangements or plans shall be used by or disclosed to any person, firm or corporation for any purpose whatsoever without the written permission of STUDIO V Architecture PLLC. Written dimensions on this drawing shall have precedence over scaled dimensions. Contractors shall verify, and be responsible for all dimensions and conditions in the field and must notify STUDIO V Architecture, PLLC. of any deviation from dimensions and conditions depicted in these drawings. © 2018 STUDIO V Architecture, PLLC. All rights reserved.

5 Off-Street Parking & Loading					
		R7D / C2-4			
Zoning Section	**Item**	**Permitted / Required**	**Proposed**	**Total**	**Compliance / Notes**
ZR 25-23	Minimum Required Parking	**Residential**: 50% of DU			
		58 spaces	61 spaces	61 spaces	*Complies*
		(115 Market Rate DU's X 50% = 58 cars)*			
		Commercial:			
		None Required	n/a		*Complies*
		Community Facility:			
		None Required **	n/a		*Complies*
		*[ZR 25-251] no accessory off street parking			
		**[ZR 25-31] no accessory off street parking			
ZR 25-811 ZR 25-82	Bicycle Parking Spaces	1 per 2 Dwelling Units : 77 Bicycles	77 Bicycles		*Complies*
		Total : 154 DU			

6 Quality Housing Program					
		R7D / C2-4			
Zoning Section	**Item**	**Permitted / Required**	**Proposed**		**Compliance / Notes**
ZR 28-12	Refuse Storage and Disposal	2.9 CU. FT per Dwelling unit 12 SF of refuse storage room shall be excluded from the Floor Area Calculation	Average of 30 CU.FT per Dwelling unit provided. 12 SF of refuse storage room each floor are excluded from the Floor Area Calculation		*Complies*
ZR 28-14	Daylight in Corridors	50% of Corridor area may be excluded from Floor Area Calculation if a window with a clear, non-tinted, glazed area of at least 20 SF. (a) shall be directly visible from 50% of the corridor or from the vertical circulation core (b)is located at least 20 f	No Daylight Deduction taken on this Project		*Complies*
ZR 28-21	Recreation Space	Minimum Recreation Space in R7 District 3.3%	4,410 sf provided on 4th Floor. (> 132,268 sf * 0.033 = 4,365 sf)		*Complies*
ZR 28-33	Planting Areas	Not required within driveways accwessing off street parking spaces, or between non-residential uses.	No Planting Areas proposed		*Complies*
ZR 28-31	Density per Corridor	50% of Floor Area of the corridor may be excluded from Floor Area Calculation if DU number served by a vertical circulation core and corridor on each story not exceeding 11 in R7 District.	11 DU served by a vertical core and corridor on 4th,5th,6th,7th, 8th, 9th, 10th & 11th floor.		*Complies*

FLOOR	GROSS AREA	DEDUCTIONS	ZONING AREA
C	0	0	0
1	16808	2522	14286
2	16557	765	15792
3	14327	767	13560
4	14327	2973	11354
5	14327	767	13560
6	15830	827	15003
7	14257	730	13527
8	14257	730	13527
9	14257	730	13527
10	10748	632	10116
11	10748	632	10116
SUM	**156443**	**12075**	**144368**

1 ZONING FLOOR AREA CHART
NO SCALE

UNIT	ACTUAL UNIT COUNT	MARKET	INCL.	UNIT MIX	TARGET UNIT COUNT
S	37	27	10	24%	25%
1BD	61	46	15	40%	45%
2BD	48	36	12	31%	25%
3BD	8	6	2	5%	5%
4BD	0	0	0	0%	0%

TOTAL UNITS: 154
MARKET RATE (75%): 115
INCLUSIONARY (25%): 39

2 DWELLING UNIT CHART
NO SCALE

NOTE: PLANS, SECTIONS AND DIAGRAMS ARE ILLUSTRATIVE AND SUBJECT TO CHANGE PENDING FUTURE BUILDING PERMIT APPLICATION.

STUDIO V ARCHITECTURE

1010 PACIFIC STREET NO. 15006

1010 Pacific Street
Brooklyn, NY 11238

OWNER / CLIENT
AVO CONSTRUCTION
65 Vestry Street
New York, NY 10013

ARCHITECT
STUDIO V ARCHITECTURE, PLLC
44 E 32nd Street New York NY 10016
T212.779.2288 F212.689.1325

CONSULTANTS
LAND USE ATTORNEY/ Sheldon Lobel, P.C.
18E 42st Street, New York, NY 10017
T 212.725.2727 F 212.725.3910

ENVIRONMENTAL CONSULTANT/ AECOM
100 Park Avenue, New York, NY 10017
T 212.708.6800

PUBLIC RELATIONS / DOMENIC RECCHIA
172 Gravesend Neck Rd, Brookly, NY 11223
T 718.336.5550

INCLUSIONARY HOUSING CONSULTANT/
BEST DEVELOPMENT GROUP
111 North Central Avenue Ste 425, Hartsdale, NY 10530
T 914.472.0180

DATE	DRAWN BY	CHECKED BY
08.15.2018	LC	JV

SHEET TITLE
ZONING ANALYSIS

SCALE
-

SHEET NO.
Z-103.00

All ideas, design, arrangements and plans indicated or represented by this drawing are owned by, and are the property of STUDIO V Architecture PLLC. and were created, evolved, and developed for use on, and in connection with the specified project. None of such ideas, arrangements or plans shall be used by or disclosed to any person, firm or corporation for any purpose whatsoever without the written permission of STUDIO V Architecture PLLC. Written dimensions on this drawing shall have precedence over scaled dimensions. Contractors shall verify, and be responsible for all dimensions and conditions in the field and must notify STUDIO V Architecture, PLLC. of any deviation from dimensions and conditions depicted in these drawings. © 2018 STUDIO V Architecture, PLLC. All rights reserved.

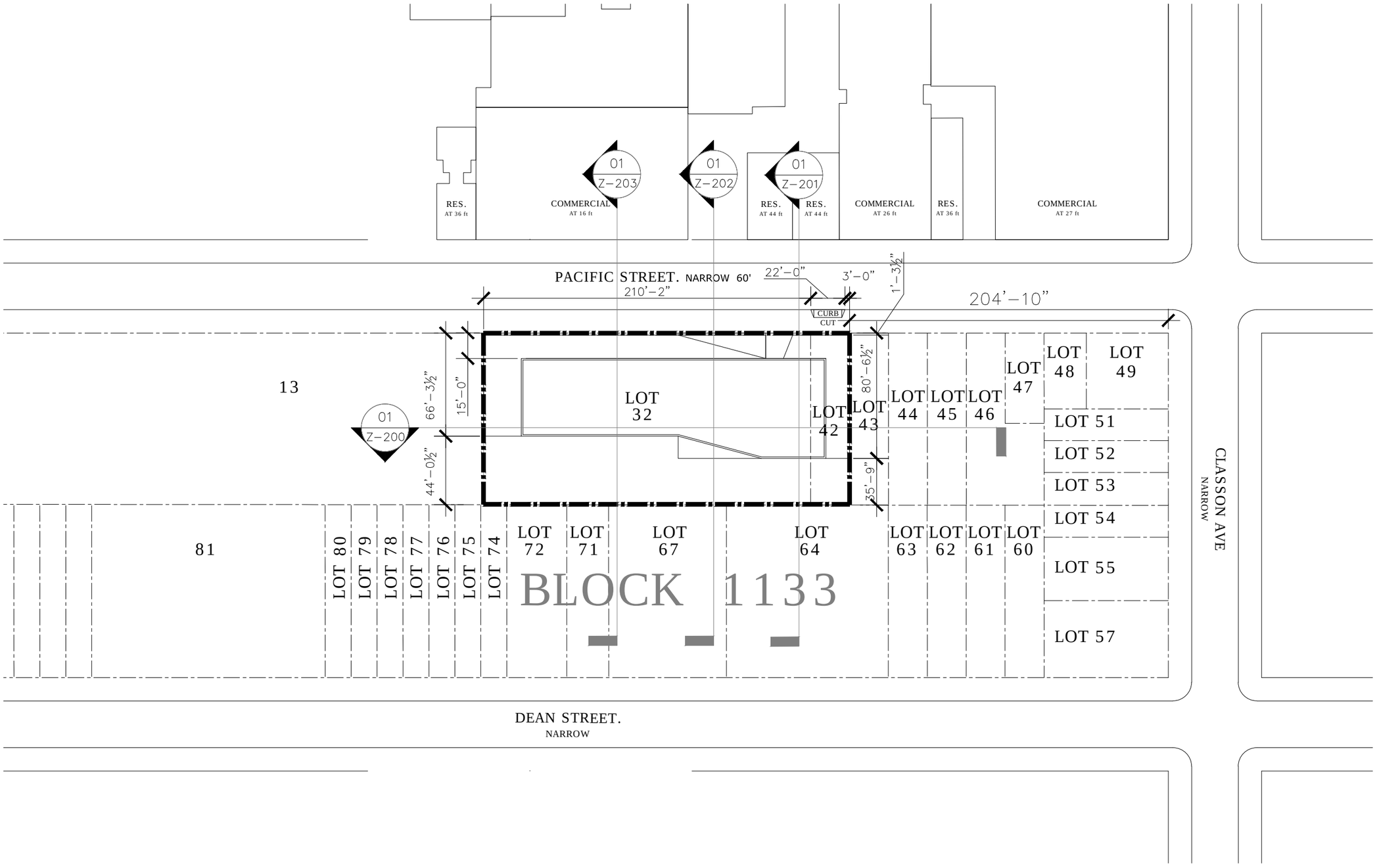

1 SITE PLAN
1/64" = 1'-0"

NOTE: PLANS, SECTIONS AND DIAGRAMS ARE ILLUSTRATIVE AND SUBJECT TO CHANGE PENDING FUTURE BUILDING PERMIT APPLICATION.

STUDIO V
ARCHITECTURE

1010 PACIFIC STREET
NO. 15006

1010 Pacific Street
Brooklyn, NY 11238

OWNER / CLIENT
AVO CONSTRUCTION
65 Vestry Street
New York, NY 10013

ARCHITECT
STUDIO V ARCHITECTURE, PLLC
44 E 32nd Street New York NY 10016
T212.779.2288 F212.689.1325

CONSULTANTS
LAND USE ATTORNEY/ Sheldon Lobel, P.C.
18E 42st Street, New York, NY 10017
T 212.725.2727 F 212.725.3910

ENVIRONMENTAL CONSULTANT/ AECOM
100 Park Avenue, New York, NY 10017
T 212.708.6800

PUBLIC RELATIONS / DOMENIC RECCHIA
172 Gravesend Neck Rd, Brookly, NY 11223
T 718.336.5550

INCLUSIONARY HOUSING CONSULTANT/
BEST DEVELOPMENT GROUP
111 North Central Avenue Ste 425, Hartsdale, NY 10530
T 914.472.0180

DATE	DRAWN BY	CHECKED BY
08.15.2018	LC,GF	JV

SHEET TITLE
SITE PLAN

SCALE
1/64" = 1'-0"

N

SHEET NO.
Z-104.00

All ideas, design, arrangements and plans indicated or represented by this drawing are owned by, and are the property of STUDIO V Architecture PLLC. and were created, evolved, and developed for use on, and in connection with the specified project. None of such ideas, arrangements or plans shall be used by or disclosed to any person, firm or corporation for any purpose whatsoever without the written permission of STUDIO V Architecture PLLC. Written dimensions on this drawing shall have precedence over scaled dimensions. Contractors shall verify, and be responsible for all dimensions and conditions in the field and must notify STUDIO V Architecture, PLLC. of any deviation from dimensions and conditions depicted in these drawings. © 2018 STUDIO V Architecture, PLLC. All rights reserved.

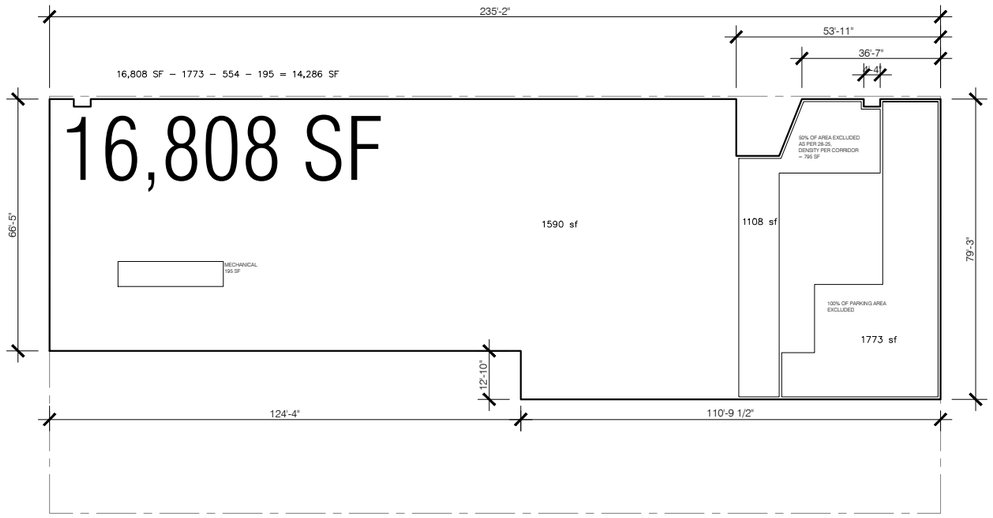

1 ST FLOOR			
		SIZE	AREA
GROSS BUILDING AREA			16,808 SF
PARKING DEDUCTION			1,773 SF
MECHANICAL DEDUCTIONS			195 SF
CORRIDOR DENSITY (28–31)			0 SF
CORRIDOR DAYLIGHT (28–14)			554 SF
TOTAL			14,286 SF

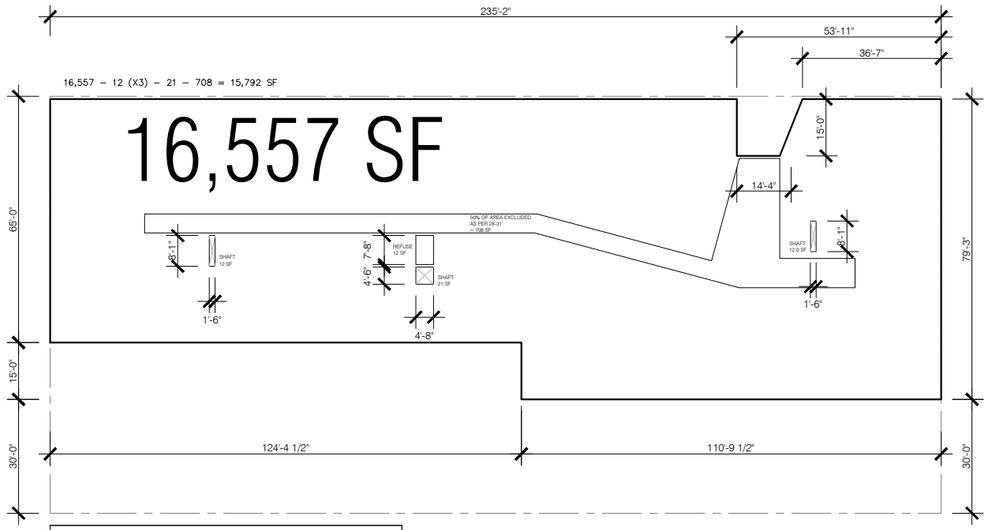

2 ND FLOOR			
		SIZE	AREA
GROSS BUILDING AREA			16,557 SF
REFUSE DEDUCTION			12 SF
MECHANICAL DEDUCTIONS		12+12+21 =	45 SF
CORRIDOR DENSITY (28–31)			0 SF
CORRIDOR DAYLIGHT (28–14)			708 SF
TOTAL			15,792 SF

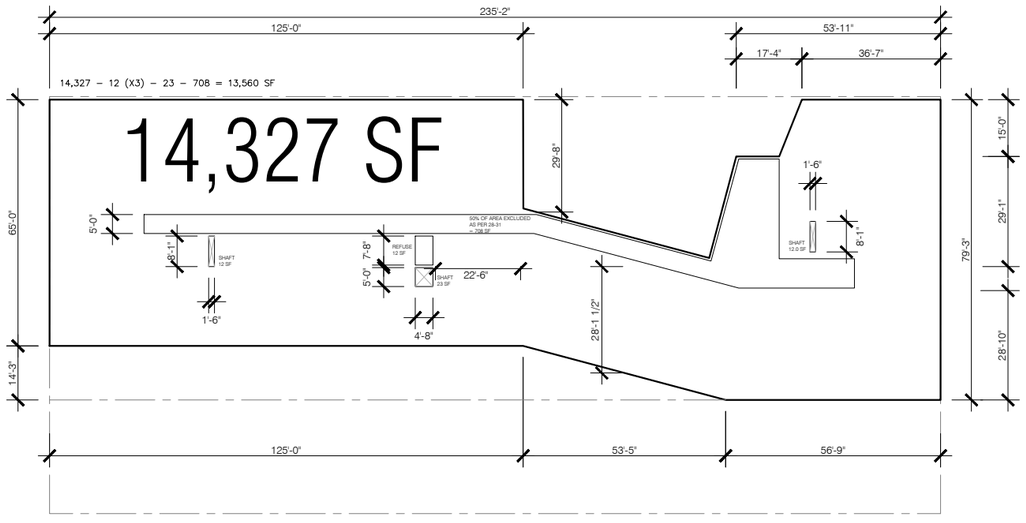

3 RD FLOOR			
		SIZE	AREA
GROSS BUILDING AREA			14,327 SF
REFUSE DEDUCTION			12 SF
MECHANICAL DEDUCTIONS		12+12+23 =	47 SF
CORRIDOR DENSITY (28–31)			0 SF
CORRIDOR DAYLIGHT (28–14)			708 SF
TOTAL			13,560 SF

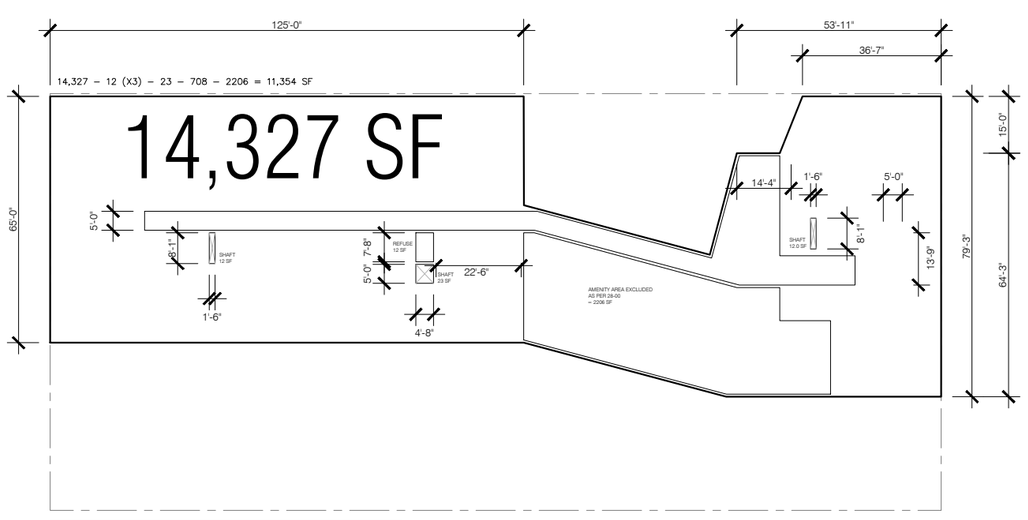

4 TH FLOOR			
		SIZE	AREA
GROSS BUILDING AREA			14,327 SF
REFUSE DEDUCTION			12 SF
MECHANICAL DEDUCTIONS		12+12+23 =	47 SF
AMENITY DEDUCTION			2,206 SF
CORRIDOR DAYLIGHT (28–14)			708 SF
TOTAL			11,354 SF

1 QUALITY HOUSING FLOOR AREA DEDUCTION CALCULATION (FLOORS 1–4)

1" = 40'–0"

NOTE: PLANS, SECTIONS AND DIAGRAMS ARE ILLUSTRATIVE AND SUBJECT TO CHANGE PENDING FUTURE BUILDING PERMIT APPLICATION.

STUDIO V ARCHITECTURE

1010 PACIFIC STREET NO. 15006

1010 Pacific Street
Brooklyn, NY 11238

OWNER / CLIENT

AVO CONSTRUCTION
65 Vestry Street
New York, NY 10013

ARCHITECT

STUDIO V ARCHITECTURE, PLLC
44 E 32nd Street New York NY 10016
T212.779.2288 F212.689.1325

CONSULTANTS

LAND USE ATTORNEY/ Sheldon Lobel, P.C.
18E 42st Street, New York, NY 10017
T 212.725.2727 F 212.725.3910

ENVIRONMENTAL CONSULTANT/ AECOM
100 Park Avenue, New York, NY 10017
T 212.708.6800

PUBLIC RELATIONS / DOMENIC RECCHIA
172 Gravesend Neck Rd, Brookly, NY 11223
T 718.336.5550

INCLUSIONARY HOUSING CONSULTANT/
BEST DEVELOPMENT GROUP
111 North Central Avenue Ste 425, Hartsdale, NY 10530
T 914.472.0180

DATE	DRAWN BY	CHECKED BY
08.15.2018	LC,GF	JV

SHEET TITLE

ZONING FLOOR AREA

SCALE

1/64" = 1'-0"

N

SHEET NO.

Z-105.00

All ideas, design, arrangements and plans indicated or represented by this drawing are owned by, and are the property of STUDIO V Architecture PLLC. and were created, evolved, and developed for use on, and in connection with the specified project. None of such ideas, arrangements or plans shall be used by or disclosed to any person, firm or corporation for any purpose whatsoever without the written permission of STUDIO V Architecture PLLC. Written dimensions on this drawing shall have precedence over scaled dimensions. Contractors shall verify, and be responsible for all dimensions and conditions in the field and must notify STUDIO V Architecture, PLLC. of any deviation from dimensions and conditions depicted in these drawings. © 2018 STUDIO V Architecture, PLLC. All rights reserved.

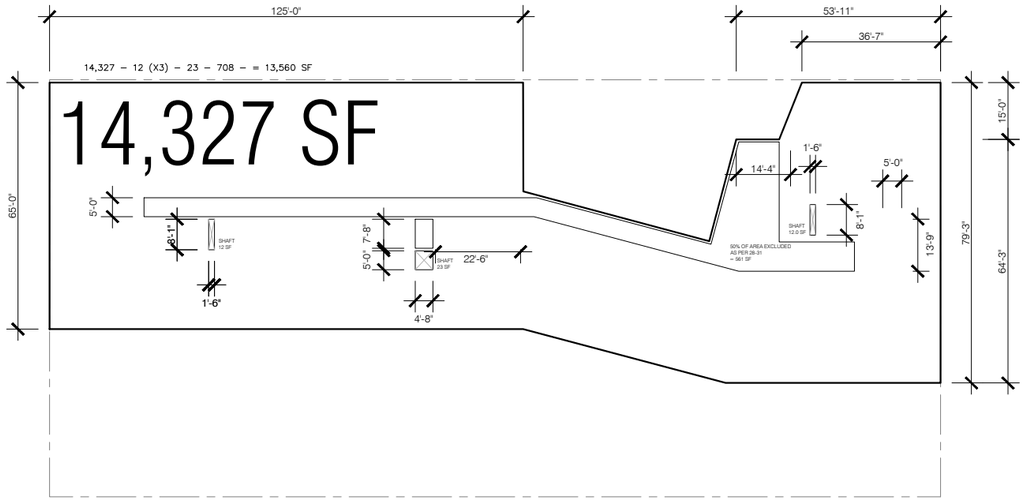

5 TH FLOOR			
		SIZE	AREA
GROSS BUILDING AREA			14,327 SF
REFUSE DEDUCTION			12 SF
MECHANICAL DEDUCTIONS		12+12+23 =	47 SF
CORRIDOR DENSITY (28–31)			0 SF
CORRIDOR DAYLIGHT (28–14)			708 SF
TOTAL			13,560 SF

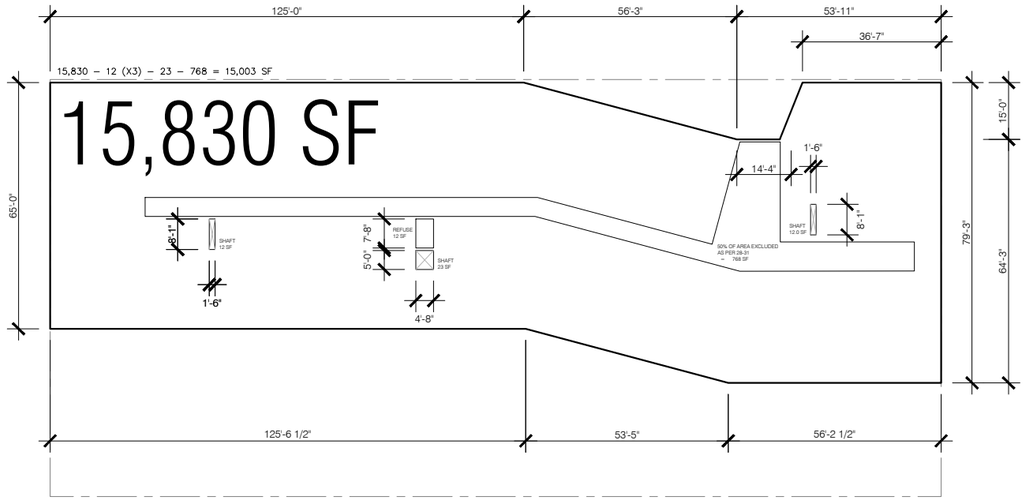

6 TH FLOOR			
		SIZE	AREA
GROSS BUILDING AREA			15,830 SF
REFUSE DEDUCTION			12 SF
MECHANICAL DEDUCTIONS		12+12+23 =	47 SF
CORRIDOR DENSITY (28–31)			0 SF
CORRIDOR DAYLIGHT (28–14)			768 SF
TOTAL			15,003 SF

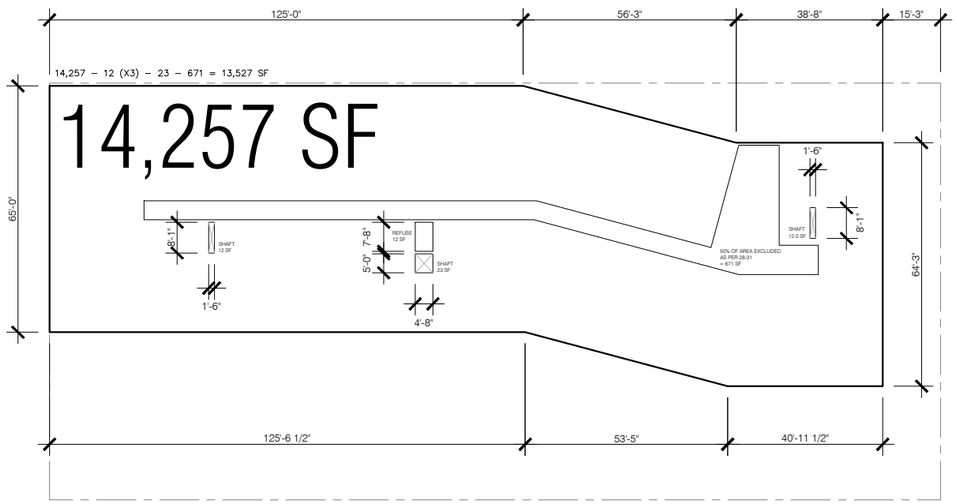

7 TH FLOOR			
		SIZE	AREA
GROSS BUILDING AREA			14,257 SF
REFUSE DEDUCTION			12 SF
MECHANICAL DEDUCTIONS		12+12+23 =	47 SF
CORRIDOR DENSITY (28–31)			0 SF
CORRIDOR DAYLIGHT (28–14)			671 SF
TOTAL			13,527 SF

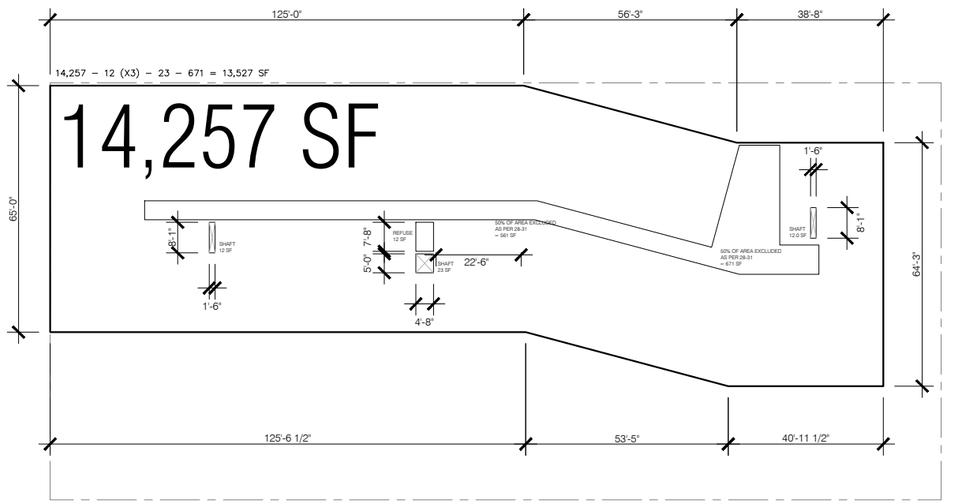

8 TH FLOOR			
		SIZE	AREA
GROSS BUILDING AREA			14,257 SF
REFUSE DEDUCTION			12 SF
MECHANICAL DEDUCTIONS		12+12+23 =	47 SF
CORRIDOR DENSITY (28–31)			0 SF
CORRIDOR DAYLIGHT (28–14)			671 SF
TOTAL			13,527 SF

1 QUALITY HOUSING FLOOR AREA DEDUCTION CALCULATION (FLOORS 5–8)

1" = 40'–0"

NOTE: PLANS, SECTIONS AND DIAGRAMS ARE ILLUSTRATIVE AND SUBJECT TO CHANGE PENDING FUTURE BUILDING PERMIT APPLICATION.

STUDIO V ARCHITECTURE

1010 PACIFIC STREET NO. 15006

1010 Pacific Street
Brooklyn, NY 11238

OWNER / CLIENT

AVO CONSTRUCTION
65 Vestry Street
New York, NY 10013

ARCHITECT

STUDIO V ARCHITECTURE, PLLC
44 E 32nd Street New York NY 10016
T212.779.2288 F212.689.1325

CONSULTANTS

LAND USE ATTORNEY/ Sheldon Lobel, P.C.
18E 42st Street, New York, NY 10017
T 212.725.2727 F 212.725.3910

ENVIRONMENTAL CONSULTANT/ AECOM
100 Park Avenue, New York, NY 10017
T 212.708.6800

PUBLIC RELATIONS / DOMENIC RECCHIA
172 Gravesend Neck Rd, Brookly, NY 11223
T 718.336.5550

INCLUSIONARY HOUSING CONSULTANT/
BEST DEVELOPMENT GROUP
111 North Central Avenue Ste 425, Hartsdale, NY 10530
T 914.472.0180

DATE	DRAWN BY	CHECKED BY
08.15.2018	LC,GF	JV

SHEET TITLE

ZONING FLOOR AREA

SCALE

1/64" = 1'-0"

N

SHEET NO.

Z-106.00

All ideas, design, arrangements and plans indicated or represented by this drawing are owned by, and are the property of STUDIO V Architecture PLLC. and were created, evolved, and developed for use on, and in connection with the specified project. None of such ideas, arrangements or plans shall be used by or disclosed to any person, firm or corporation for any purpose whatsoever without the written permission of STUDIO V Architecture PLLC. Written dimensions on this drawing shall have precedence over scaled dimensions. Contractors shall verify, and be responsible for all dimensions and conditions in the field and must notify STUDIO V Architecture, PLLC. of any deviation from dimensions and conditions depicted in these drawings. © 2018 STUDIO V Architecture, PLLC. All rights reserved.

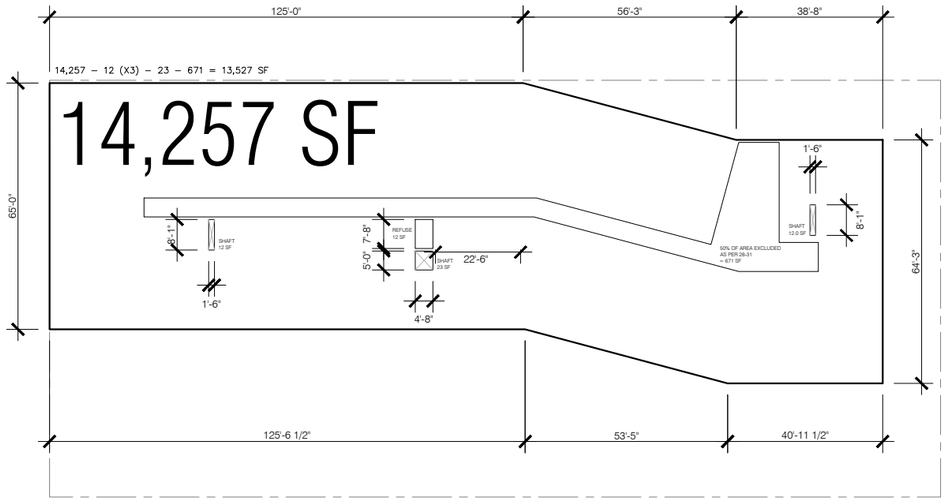

9 TH FLOOR			
		SIZE	AREA
GROSS BUILDING AREA			14,257 SF
REFUSE DEDUCTION			12 SF
MECHANICAL DEDUCTIONS		12+12+23 =	47 SF
CORRIDOR DENSITY (28–31)			0 SF
CORRIDOR DAYLIGHT (28–14)			671 SF
TOTAL			13,527 SF

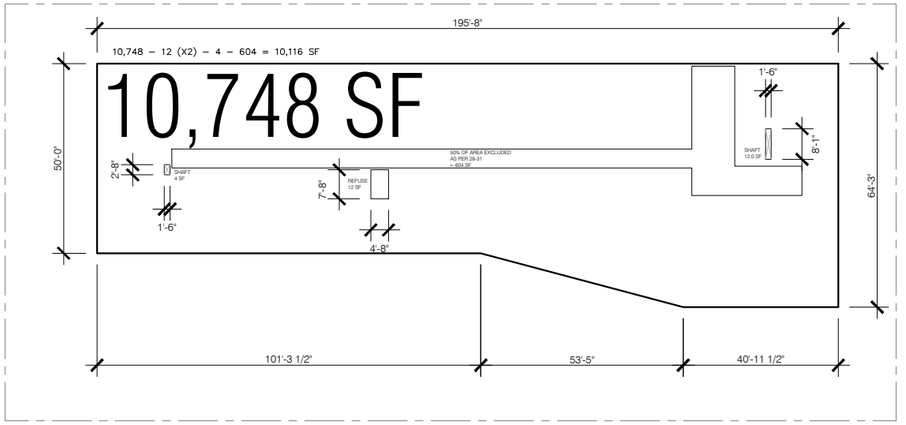

10 TH FLOOR			
		SIZE	AREA
GROSS BUILDING AREA			10,748 SF
REFUSE DEDUCTION			12 SF
MECHANICAL DEDUCTIONS		12+4 =	16 SF
CORRIDOR DENSITY (28–31)			0 SF
CORRIDOR DAYLIGHT (28–14)			604 SF
TOTAL			10,116 SF

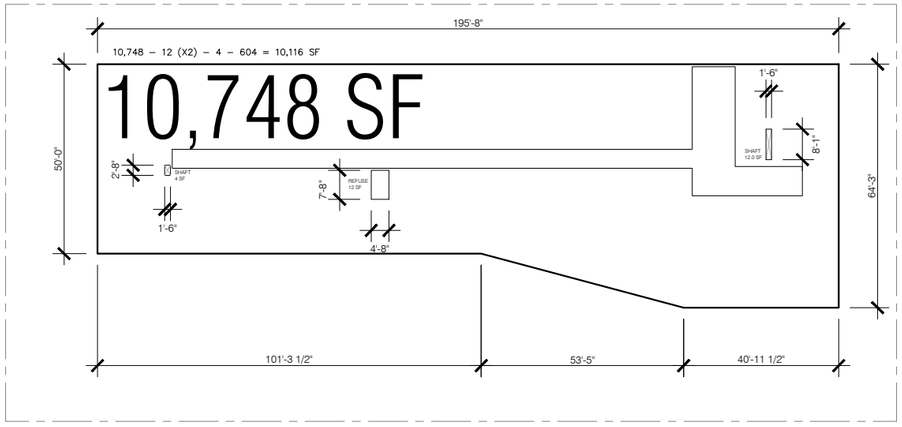

11 TH FLOOR			
		SIZE	AREA
GROSS BUILDING AREA			10,748 SF
REFUSE DEDUCTION			12 SF
MECHANICAL DEDUCTIONS		12+4 =	16 SF
CORRIDOR DENSITY (28–31)			0 SF
CORRIDOR DAYLIGHT (28–14)			604 SF
TOTAL			10,116 SF

1 QUALITY HOUSING FLOOR AREA DEDUCTION CALCULATION (FLOORS 9–11)

1" = 40'–0"

NOTE: PLANS, SECTIONS AND DIAGRAMS ARE ILLUSTRATIVE AND SUBJECT TO CHANGE PENDING FUTURE BUILDING PERMIT APPLICATION.

STUDIO V ARCHITECTURE

1010 PACIFIC STREET NO. 15006

1010 Pacific Street
Brooklyn, NY 11238

OWNER / CLIENT

AVO CONSTRUCTION
65 Vestry Street
New York, NY 10013

ARCHITECT

STUDIO V ARCHITECTURE, PLLC
44 E 32nd Street New York NY 10016
T212.779.2288 F212.689.1325

CONSULTANTS

LAND USE ATTORNEY/ Sheldon Lobel, P.C.
18E 42st Street, New York, NY 10017
T 212.725.2727 F 212.725.3910

ENVIRONMENTAL CONSULTANT/ AECOM
100 Park Avenue, New York, NY 10017
T 212.708.6800

PUBLIC RELATIONS / DOMENIC RECCHIA
172 Gravesend Neck Rd, Brookly, NY 11223
T 718.336.5550

INCLUSIONARY HOUSING CONSULTANT/
BEST DEVELOPMENT GROUP
111 North Central Avenue Ste 425, Hartsdale, NY 10530
T 914.472.0180

DATE	DRAWN BY	CHECKED BY
08.15.2018	LC,GF	JV

SHEET TITLE

ZONING FLOOR AREA

SCALE

1/64" = 1'-0"

N

SHEET NO.

Z-107.00

All ideas, design, arrangements and plans indicated or represented by this drawing are owned by, and are the property of STUDIO V Architecture PLLC. and were created, evolved, and developed for use on, and in connection with the specified project. None of such ideas, arrangements or plans shall be used by or disclosed to any person, firm or corporation for any purpose whatsoever without the written permission of STUDIO V Architecture PLLC. Written dimensions on this drawing shall have precedence over scaled dimensions. Contractors shall verify, and be responsible for all dimensions and conditions in the field and must notify STUDIO V Architecture, PLLC. of any deviation from dimensions and conditions depicted in these drawings. © 2018 STUDIO V Architecture, PLLC. All rights reserved.

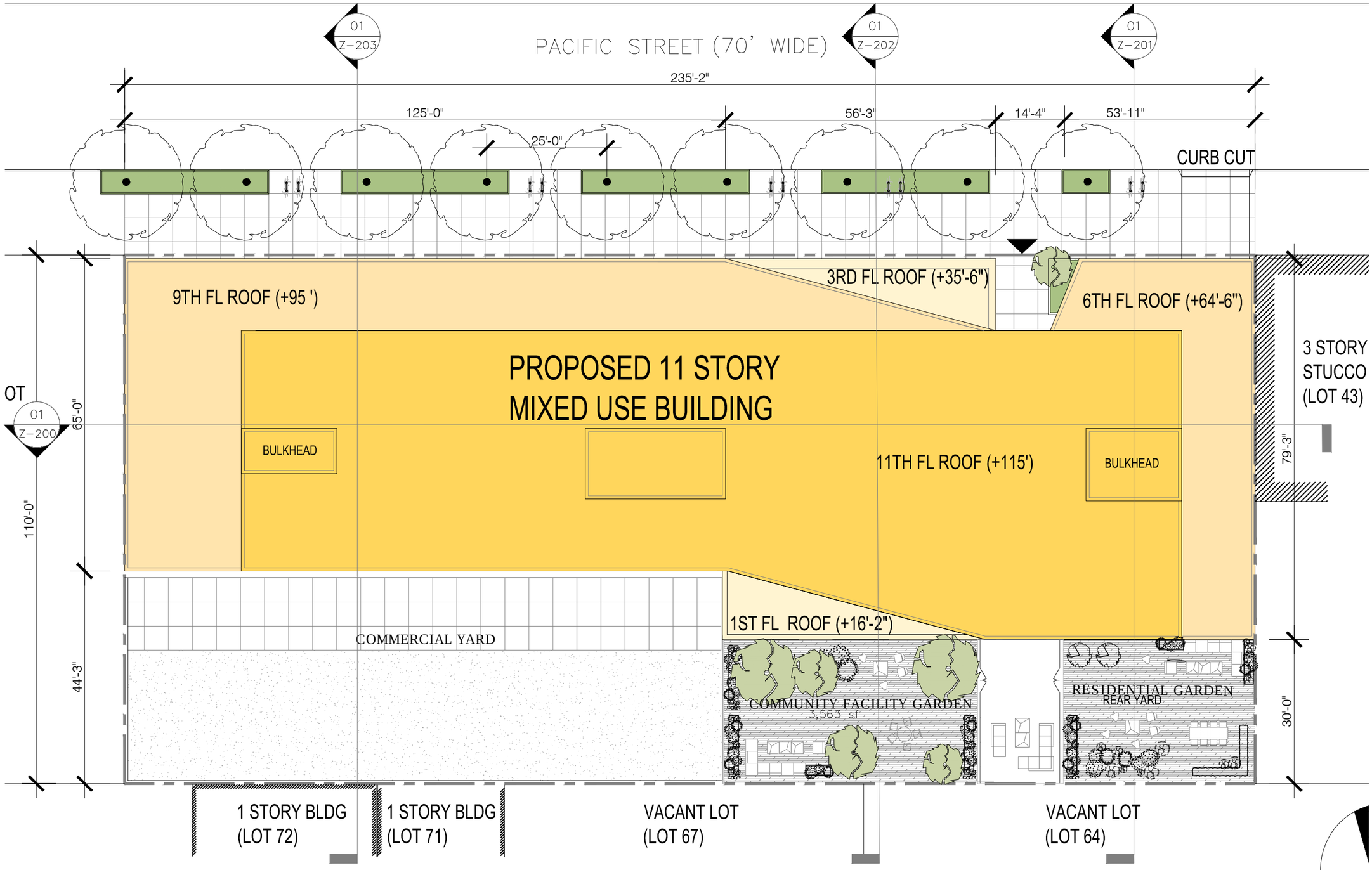

1 BUILDING SITE PLAN
1" = 20'-0"

NOTE: PLANS, SECTIONS AND DIAGRAMS ARE ILLUSTRATIVE AND SUBJECT TO CHANGE PENDING FUTURE BUILDING PERMIT APPLICATION.

STUDIO V
ARCHITECTURE

1010 PACIFIC STREET
NO. 15006

1010 Pacific Street
Brooklyn, NY 11238

OWNER / CLIENT

AVO CONSTRUCTION
65 Vestry Street
New York, NY 10013

ARCHITECT

STUDIO V ARCHITECTURE, PLLC
44 E 32nd Street New York NY 10016
T212.779.2288 F212.689.1325

CONSULTANTS

LAND USE ATTORNEY/ Sheldon Lobel, P.C.
18E 42st Street, New York, NY 10017
T 212.725.2727 F 212.725.3910

ENVIRONMENTAL CONSULTANT/ AECOM
100 Park Avenue, New York, NY 10017
T 212.708.6800

PUBLIC RELATIONS / DOMENIC RECCHIA
172 Gravesend Neck Rd, Brookly, NY 11223
T 718.336.5550

INCLUSIONARY HOUSING CONSULTANT/
BEST DEVELOPMENT GROUP
111 North Central Avenue Ste 425, Hartsdale, NY 10530
T 914.472.0180

DATE	DRAWN BY	CHECKED BY
08.15.2018	LC	JV

SHEET TITLE

SITE PLAN

SCALE

1"=20' 0"

N

SHEET NO.

Z-108.00

All ideas, design, arrangements and plans indicated or represented by this drawing are owned by, and are the property of STUDIO V Architecture PLLC. and were created, evolved, and developed for use on, and in connection with the specified project. None of such ideas, arrangements or plans shall be used by or disclosed to any person, firm or corporation for any purpose whatsoever without the written permission of STUDIO V Architecture PLLC. Written dimensions on this drawing shall have precedence over scaled dimensions. Contractors shall verify, and be responsible for all dimensions and conditions in the field and must notify STUDIO V Architecture, PLLC. of any deviation from dimensions and conditions depicted in these drawings. © 2018 STUDIO V Architecture, PLLC. All rights reserved.

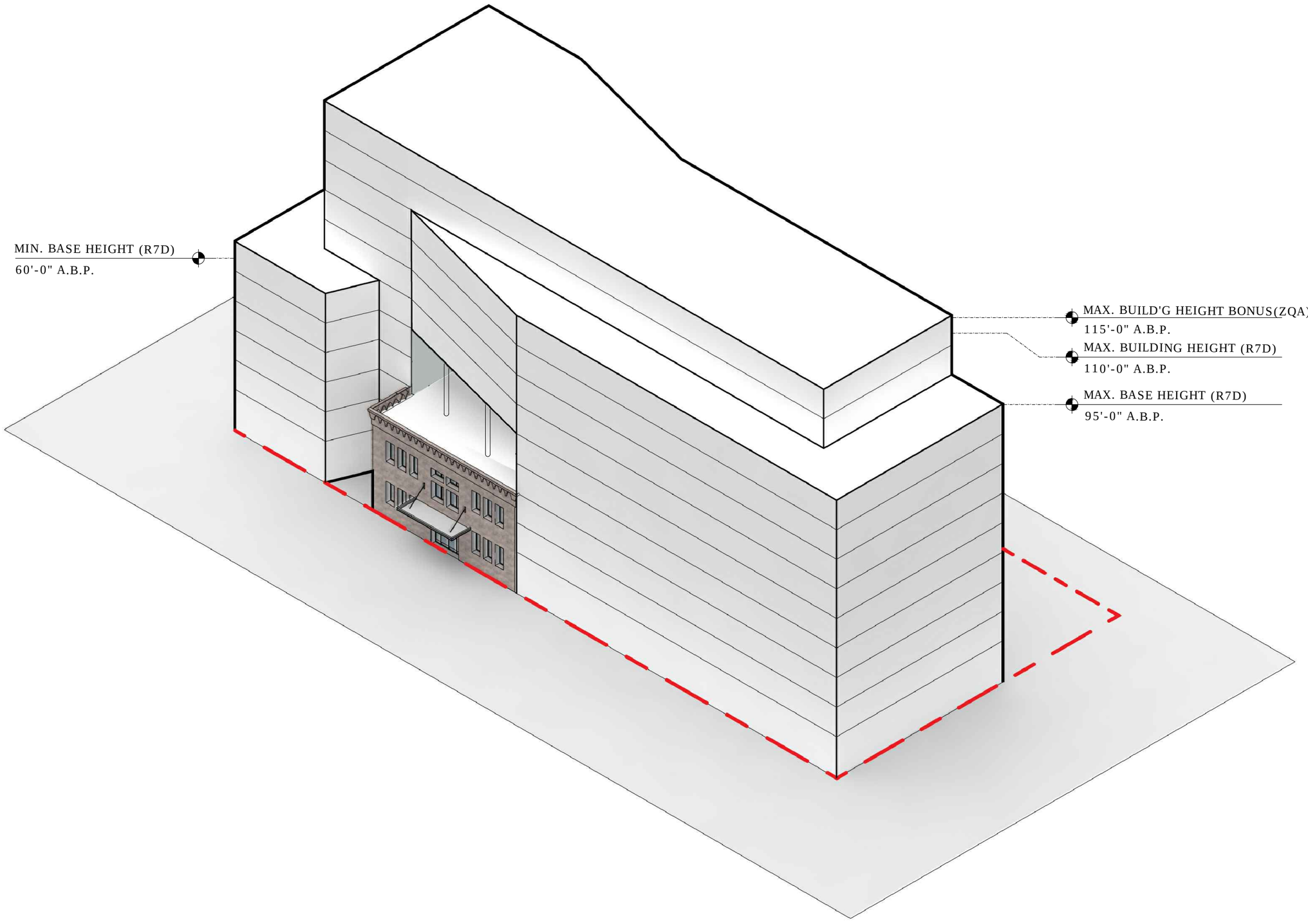

1 BUILDING SITE PLAN
1" = 20'-0"

NOTE: PLANS, SECTIONS AND DIAGRAMS ARE ILLUSTRATIVE AND SUBJECT TO CHANGE PENDING FUTURE BUILDING PERMIT APPLICATION.

STUDIO V
ARCHITECTURE

1010 PACIFIC STREET
NO. 15006

1010 Pacific Street
Brooklyn, NY 11238

OWNER / CLIENT

AVO CONSTRUCTION
65 Vestry Street
New York, NY 10013

ARCHITECT

STUDIO V ARCHITECTURE, PLLC
44 E 32nd Street New York NY 10016
T212.779.2288 F212.689.1325

CONSULTANTS

LAND USE ATTORNEY/ Sheldon Lobel, P.C.
18E 42st Street, New York, NY 10017
T 212.725.2727 F 212.725.3910

ENVIRONMENTAL CONSULTANT/ AECOM
100 Park Avenue, New York, NY 10017
T 212.708.6800

PUBLIC RELATIONS / DOMENIC RECCHIA
172 Gravesend Neck Rd, Brookly, NY 11223
T 718.336.5550

INCLUSIONARY HOUSING CONSULTANT/
BEST DEVELOPMENT GROUP
111 North Central Avenue Ste 425, Hartsdale, NY 10530
T 914.472.0180

DATE	DRAWN BY	CHECKED BY
08.15.2018	LC	JV

SHEET TITLE

ZONING DIAGRAM

SCALE

1"=20' 0"

N

SHEET NO.

Z-109.00

All ideas, design, arrangements and plans indicated or represented by this drawing are owned by, and are the property of STUDIO V Architecture PLLC. and were created, evolved, and developed for use on, and in connection with the specified project. None of such ideas, arrangements or plans shall be used by or disclosed to any person, firm or corporation for any purpose whatsoever without the written permission of STUDIO V Architecture PLLC. Written dimensions on this drawing shall have precedence over scaled dimensions. Contractors shall verify, and be responsible for all dimensions and conditions in the field and must notify STUDIO V Architecture, PLLC. of any deviation from dimensions and conditions depicted in these drawings. © 2018 STUDIO V Architecture, PLLC. All rights reserved.

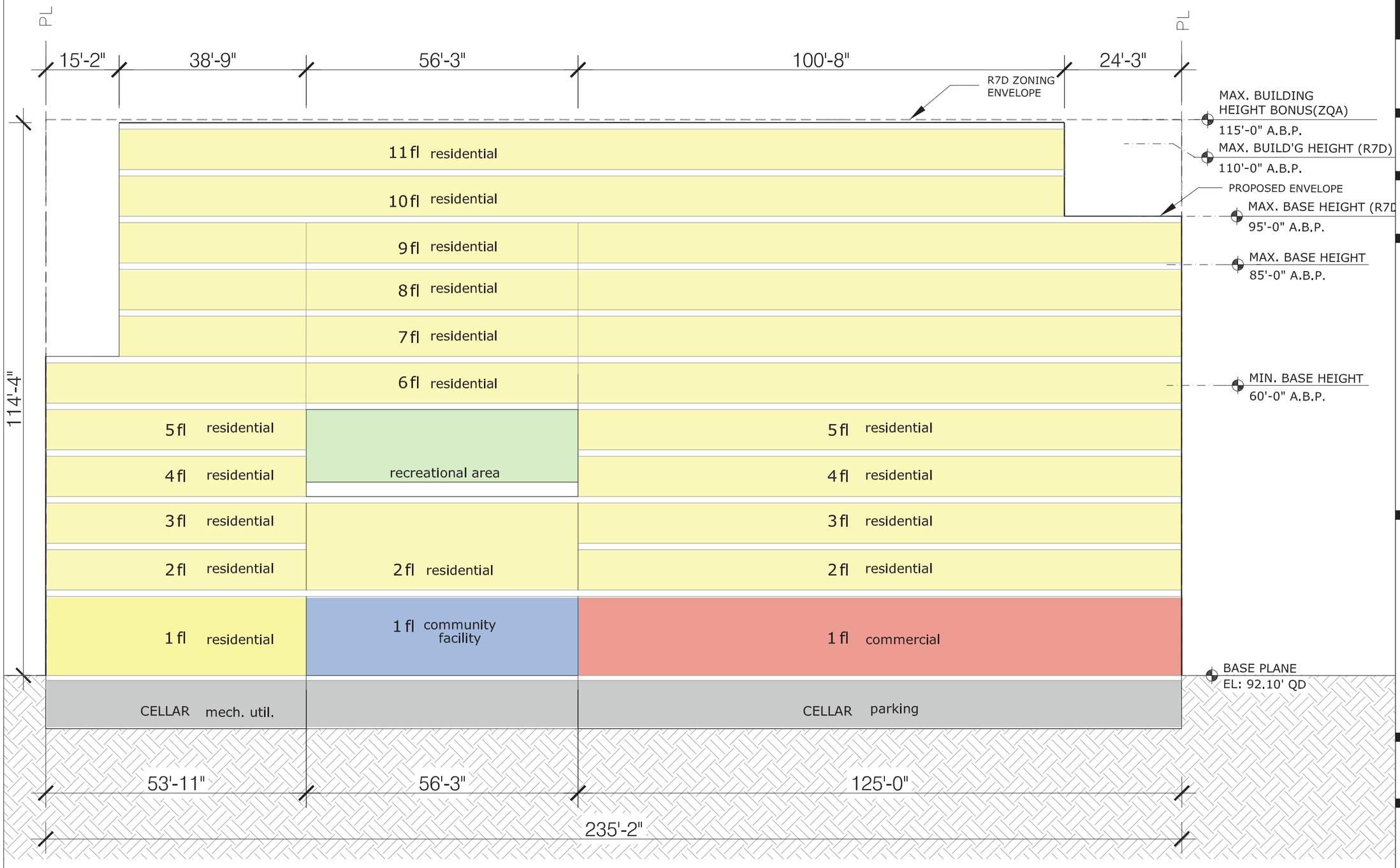

1 LONGITUDINAL BUILDING SECTION
1" =20'-0"

NOTE: PLANS, SECTIONS AND DIAGRAMS ARE ILLUSTRATIVE AND SUBJECT TO CHANGE PENDING FUTURE BUILDING PERMIT APPLICATION.

STUDIO V ARCHITECTURE

1010 PACIFIC STREET NO. 15006

1010 Pacific Street
Brooklyn, NY 11238

OWNER / CLIENT
AVO CONSTRUCTION
65 Vestry Street
New York, NY 10013

ARCHITECT
STUDIO V ARCHITECTURE, PLLC
44 E 32nd Street New York NY 10016
T212.779.2288 F212.689.1325

CONSULTANTS

LAND USE ATTORNEY/ Sheldon Lobel, P.C.
18E 42st Street, New York, NY 10017
T 212.725.2727 F 212.725.3910

ENVIRONMENTAL CONSULTANT/ AECOM
100 Park Avenue, New York, NY 10017
T 212.708.6800

PUBLIC RELATIONS / DOMENIC RECCHIA
172 Gravesend Neck Rd, Brookly, NY 11223
T 718.336.5550

INCLUSIONARY HOUSING CONSULTANT/
BEST DEVELOPMENT GROUP
111 North Central Avenue Ste 425, Hartsdale, NY 10530
T 914.472.0180

DATE	DRAWN BY	CHECKED BY
08.15.2018	LC	JV

SHEET TITLE
LONGITUDINAL SECTION

SCALE
1"=20' 0"

N

SHEET NO.
Z-200.00

All ideas, design, arrangements and plans indicated or represented by this drawing are owned by, and are the property of STUDIO V Architecture PLLC. and were created, evolved, and developed for use on, and in connection with the specified project. None of such ideas, arrangements or plans shall be used by or disclosed to any person, firm or corporation for any purpose whatsoever without the written permission of STUDIO V Architecture PLLC. Written dimensions on this drawing shall have precedence over scaled dimensions. Contractors shall verify, and be responsible for all dimensions and conditions in the field and must notify STUDIO V Architecture, PLLC. of any deviation from dimensions and conditions depicted in these drawings. © 2018 STUDIO V Architecture, PLLC. All rights reserved.

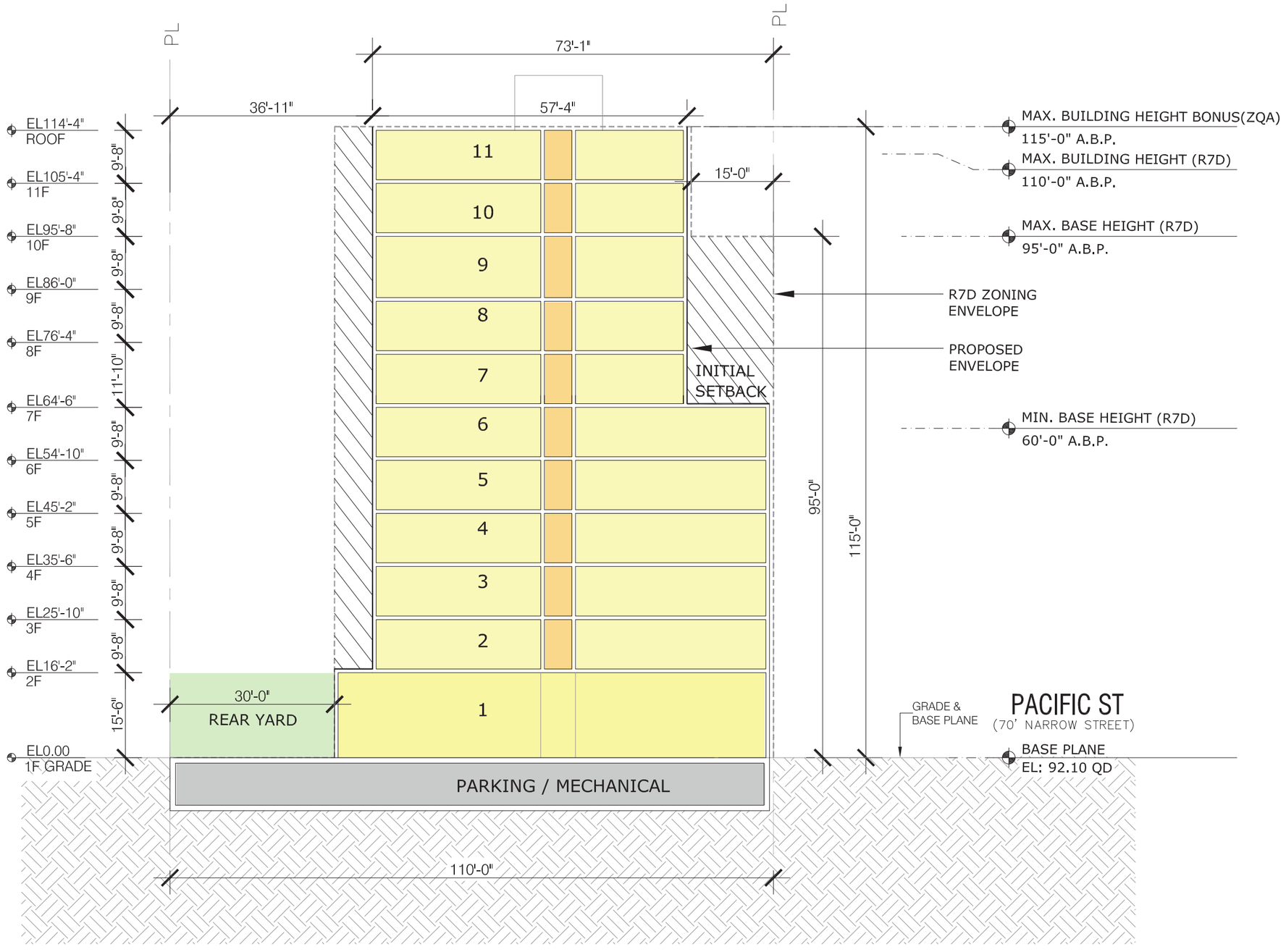

1 CROSS BUILDING SECTION
1" =20'-0"

NOTE: PLANS, SECTIONS AND DIAGRAMS ARE ILLUSTRATIVE AND SUBJECT TO CHANGE PENDING FUTURE BUILDING PERMIT APPLICATION.

STUDIO V
ARCHITECTURE

1010 PACIFIC STREET
NO. 15006

1010 Pacific Street
Brooklyn, NY 11238

OWNER / CLIENT
AVO CONSTRUCTION
65 Vestry Street
New York, NY 10013

ARCHITECT
STUDIO V ARCHITECTURE, PLLC
44 E 32nd Street New York NY 10016
T212.779.2288 F212.689.1325

CONSULTANTS
LAND USE ATTORNEY/ Sheldon Lobel, P.C.
18E 42st Street, New York, NY 10017
T 212.725.2727 F 212.725.3910

ENVIRONMENTAL CONSULTANT/ AECOM
100 Park Avenue, New York, NY 10017
T 212.708.6800

PUBLIC RELATIONS / DOMENIC RECCHIA
172 Gravesend Neck Rd, Brookly, NY 11223
T 718.336.5550

INCLUSIONARY HOUSING CONSULTANT/
BEST DEVELOPMENT GROUP
111 North Central Avenue Ste 425, Hartsdale, NY 10530
T 914.472.0180

DATE	DRAWN BY	CHECKED BY
08.15.2018	LC	JV

SHEET TITLE
CROSS SECTION 1

SCALE
1"=20' 0"

N

SHEET NO.
Z-201.00

All ideas, design, arrangements and plans indicated or represented by this drawing are owned by, and are the property of STUDIO V Architecture PLLC. and were created, evolved, and developed for use on, and in connection with the specified project. None of such ideas, arrangements or plans shall be used by or disclosed to any person, firm or corporation for any purpose whatsoever without the written permission of STUDIO V Architecture PLLC. Written dimensions on this drawing shall have precedence over scaled dimensions. Contractors shall verify, and be responsible for all dimensions and conditions in the field and must notify STUDIO V Architecture, PLLC. of any deviation from dimensions and conditions depicted in these drawings. © 2018 STUDIO V Architecture, PLLC. All rights reserved.

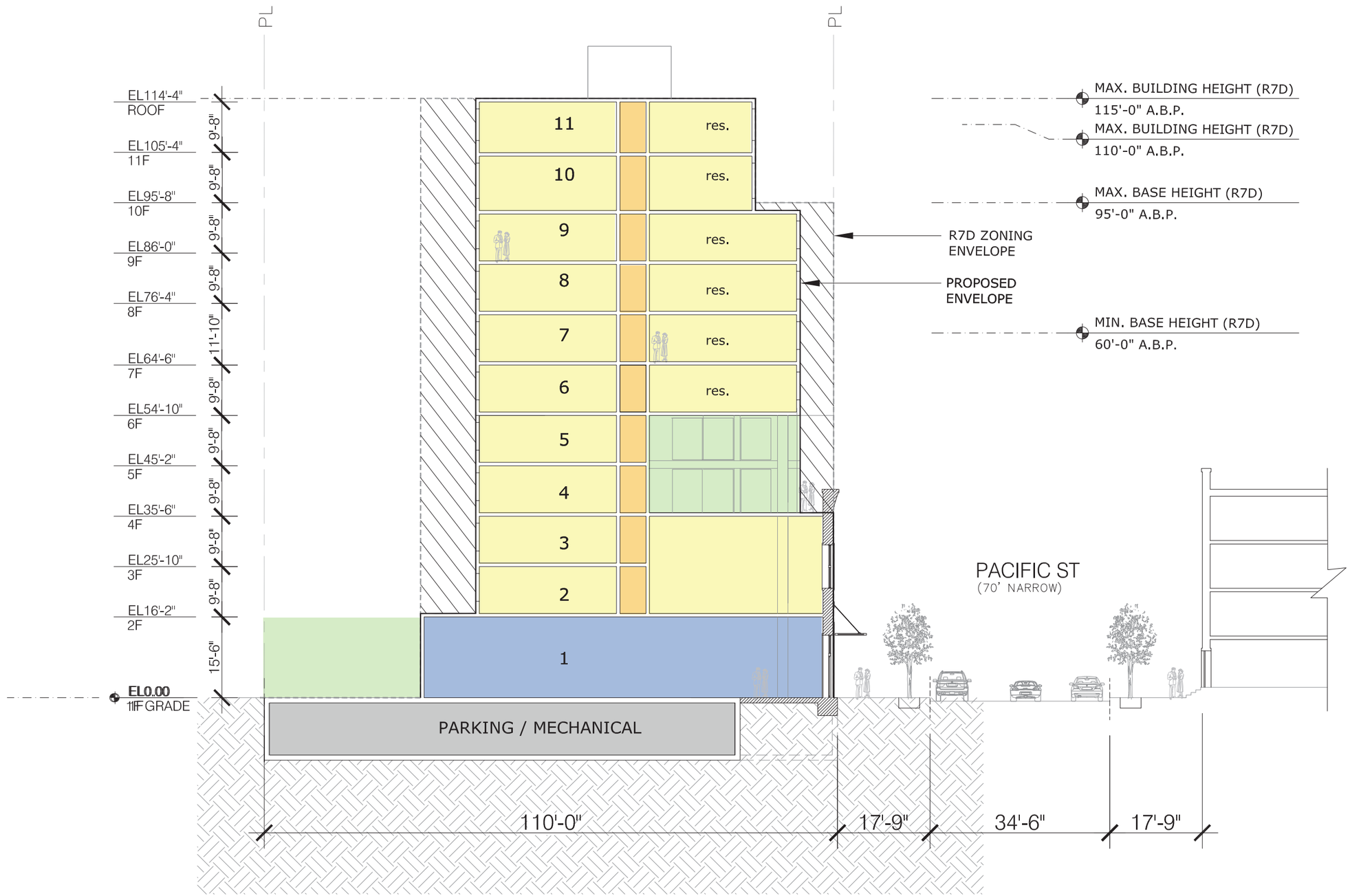

1 CROSS BUILDING SECTION
1" =20'-0"

NOTE: PLANS, SECTIONS AND DIAGRAMS ARE ILLUSTRATIVE AND SUBJECT TO CHANGE PENDING FUTURE BUILDING PERMIT APPLICATION.

STUDIO V ARCHITECTURE

1010 PACIFIC STREET
NO. 15006

1010 Pacific Street
Brooklyn, NY 11238

OWNER / CLIENT
AVO CONSTRUCTION
65 Vestry Street
New York, NY 10013

ARCHITECT
STUDIO V ARCHITECTURE, PLLC
44 E 32nd Street New York NY 10016
T212.779.2288 F212.689.1325

CONSULTANTS
LAND USE ATTORNEY/ Sheldon Lobel, P.C.
18E 42st Street, New York, NY 10017
T 212.725.2727 F 212.725.3910

ENVIRONMENTAL CONSULTANT/ AECOM
100 Park Avenue, New York, NY 10017
T 212.708.6800

PUBLIC RELATIONS / DOMENIC RECCHIA
172 Gravesend Neck Rd, Brookly, NY 11223
T 718.336.5550

INCLUSIONARY HOUSING CONSULTANT/
BEST DEVELOPMENT GROUP
111 North Central Avenue Ste 425, Hartsdale, NY 10530
T 914.472.0180

DATE	DRAWN BY	CHECKED BY
08.15.2018	LC	JV

SHEET TITLE
CROSS SECTION 2

SCALE
1"=20' 0"

N

SHEET NO.
Z-202.00

All ideas, design, arrangements and plans indicated or represented by this drawing are owned by, and are the property of STUDIO V Architecture PLLC. and were created, evolved, and developed for use on, and in connection with the specified project. None of such ideas, arrangements or plans shall be used by or disclosed to any person, firm or corporation for any purpose whatsoever without the written permission of STUDIO V Architecture PLLC. Written dimensions on this drawing shall have precedence over scaled dimensions. Contractors shall verify, and be responsible for all dimensions and conditions in the field and must notify STUDIO V Architecture, PLLC. of any deviation from dimensions and conditions depicted in these drawings. © 2018 STUDIO V Architecture, PLLC. All rights reserved.

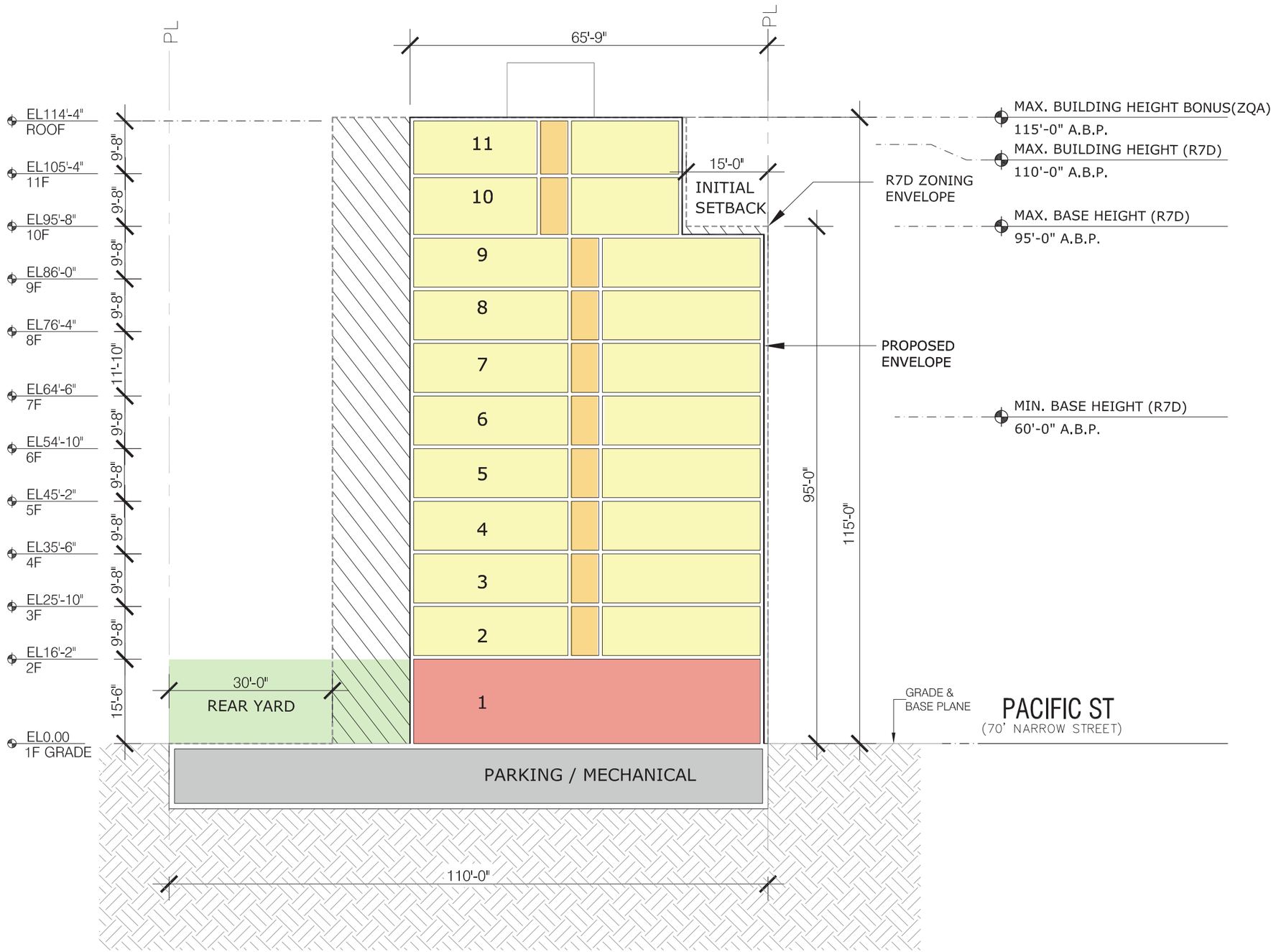

1 CROSS BUILDING SECTION
1" =20'-0"

NOTE: PLANS, SECTIONS AND DIAGRAMS ARE ILLUSTRATIVE AND SUBJECT TO CHANGE PENDING FUTURE BUILDING PERMIT APPLICATION.

STUDIO V
ARCHITECTURE

1010 PACIFIC STREET
NO. 15006

1010 Pacific Street
Brooklyn, NY 11238

OWNER / CLIENT
AVO CONSTRUCTION
65 Vestry Street
New York, NY 10013

ARCHITECT
STUDIO V ARCHITECTURE, PLLC
44 E 32nd Street New York NY 10016
T212.779.2288 F212.689.1325

CONSULTANTS
LAND USE ATTORNEY/ Sheldon Lobel, P.C.
18E 42st Street, New York, NY 10017
T 212.725.2727 F 212.725.3910

ENVIRONMENTAL CONSULTANT/ AECOM
100 Park Avenue, New York, NY 10017
T 212.708.6800

PUBLIC RELATIONS / DOMENIC RECCHIA
172 Gravesend Neck Rd, Brookly, NY 11223
T 718.336.5550

INCLUSIONARY HOUSING CONSULTANT/
BEST DEVELOPMENT GROUP
111 North Central Avenue Ste 425, Hartsdale, NY 10530
T 914.472.0180

DATE	DRAWN BY	CHECKED BY
08.15.2018	LC	JV

SHEET TITLE
CROSS SECTION 3

SCALE
1"=20' 0"

N

SHEET NO.
Z-203.00

All ideas, design, arrangements and plans indicated or represented by this drawing are owned by, and are the property of STUDIO V Architecture PLLC. and were created, evolved, and developed for use on, and in connection with the specified project. None of such ideas, arrangements or plans shall be used by or disclosed to any person, firm or corporation for any purpose whatsoever without the written permission of STUDIO V Architecture PLLC. Written dimensions on this drawing shall have precedence over scaled dimensions. Contractors shall verify, and be responsible for all dimensions and conditions in the field and must notify STUDIO V Architecture, PLLC. of any deviation from dimensions and conditions depicted in these drawings. © 2018 STUDIO V Architecture, PLLC. All rights reserved.

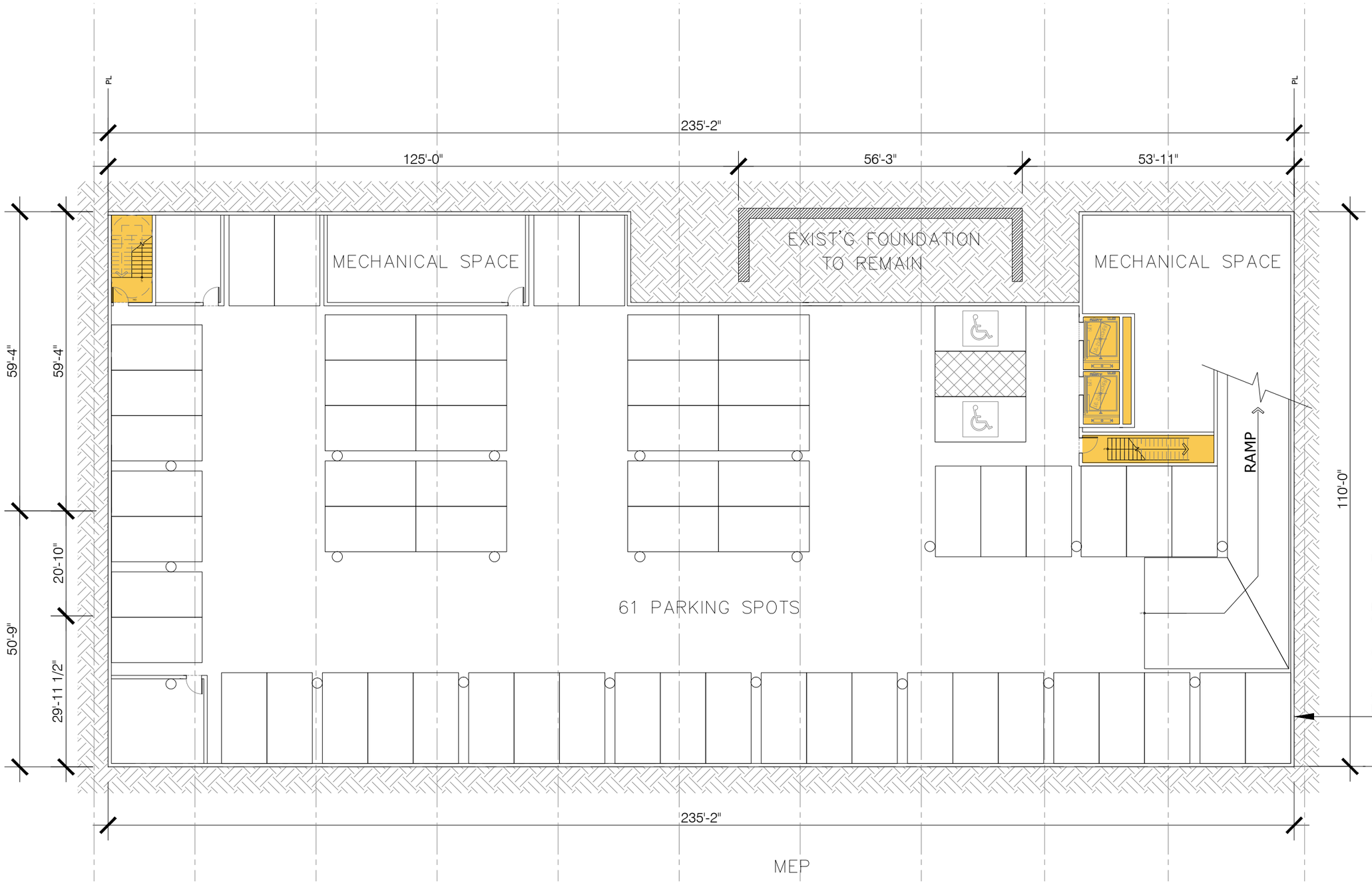

1 CELLAR PLAN
1" = 20'-0"

NOTE: PLANS, SECTIONS AND DIAGRAMS ARE ILLUSTRATIVE AND SUBJECT TO CHANGE PENDING FUTURE BUILDING PERMIT APPLICATION.

STUDIO V
ARCHITECTURE

1010 PACIFIC STREET
NO. 15006

1010 Pacific Street
Brooklyn, NY 11238

OWNER / CLIENT
AVO CONSTRUCTION
65 Vestry Street
New York, NY 10013

ARCHITECT
STUDIO V ARCHITECTURE, PLLC
44 E 32nd Street New York NY 10016
T212.779.2288 F212.689.1325

CONSULTANTS

LAND USE ATTORNEY/ Sheldon Lobel, P.C.
18E 42st Street, New York, NY 10017
T 212.725.2727 F 212.725.3910

ENVIRONMENTAL CONSULTANT/ AECOM
100 Park Avenue, New York, NY 10017
T 212.708.6800

PUBLIC RELATIONS / DOMENIC RECCHIA
172 Gravesend Neck Rd, Brookly, NY 11223
T 718.336.5550

INCLUSIONARY HOUSING CONSULTANT/
BEST DEVELOPMENT GROUP
111 North Central Avenue Ste 425, Hartsdale, NY 10530
T 914.472.0180

DATE	DRAWN BY	CHECKED BY
08.15.2018	LC	JV

SHEET TITLE
CELLAR FLOOR PLAN

SCALE
1"=20' 0"

SHEET NO.
A-301.00

All ideas, design, arrangements and plans indicated or represented by this drawing are owned by, and are the property of STUDIO V Architecture PLLC. and were created, evolved, and developed for use on, and in connection with the specified project. None of such ideas, arrangements or plans shall be used by or disclosed to any person, firm or corporation for any purpose whatsoever without the written permission of STUDIO V Architecture PLLC. Written dimensions on this drawing shall have precedence over scaled dimensions. Contractors shall verify, and be responsible for all dimensions and conditions in the field and must notify STUDIO V Architecture, PLLC. of any deviation from dimensions and conditions depicted in these drawings. © 2018 STUDIO V Architecture, PLLC. All rights reserved.



1 GROUND FLOOR PLAN
1" = 20'-0"

NOTE: PLANS, SECTIONS AND DIAGRAMS ARE ILLUSTRATIVE AND SUBJECT TO CHANGE PENDING FUTURE BUILDING PERMIT APPLICATION.

STUDIO V
ARCHITECTURE

1010 PACIFIC STREET
NO. 15006

1010 Pacific Street
Brooklyn, NY 11238

OWNER / CLIENT
AVO CONSTRUCTION
65 Vestry Street
New York, NY 10013

ARCHITECT
STUDIO V ARCHITECTURE, PLLC
44 E 32nd Street New York NY 10016
T212.779.2288 F212.689.1325

CONSULTANTS

LAND USE ATTORNEY/ Sheldon Lobel, P.C.
18E 42st Street, New York, NY 10017
T 212.725.2727 F 212.725.3910

ENVIRONMENTAL CONSULTANT/ AECOM
100 Park Avenue, New York, NY 10017
T 212.708.6800

PUBLIC RELATIONS / DOMENIC RECCHIA
172 Gravesend Neck Rd, Brookly, NY 11223
T 718.336.5550

INCLUSIONARY HOUSING CONSULTANT/
BEST DEVELOPMENT GROUP
111 North Central Avenue Ste 425, Hartsdale, NY 10530
T 914.472.0180

DATE	DRAWN BY	CHECKED BY
08.15.2018	LC	JV

SHEET TITLE
GROUND FLOOR PLAN

SCALE
1"=20' 0"

N

SHEET NO.
A-302.00

All ideas, design, arrangements and plans indicated or represented by this drawing are owned by, and are the property of STUDIO V Architecture PLLC. and were created, evolved, and developed for use on, and in connection with the specified project. None of such ideas, arrangements or plans shall be used by or disclosed to any person, firm or corporation for any purpose whatsoever without the written permission of STUDIO V Architecture PLLC. Written dimensions on this drawing shall have precedence over scaled dimensions. Contractors shall verify, and be responsible for all dimensions and conditions in the field and must notify STUDIO V Architecture, PLLC. of any deviation from dimensions and conditions depicted in these drawings. © 2018 STUDIO V Architecture, PLLC. All rights reserved.

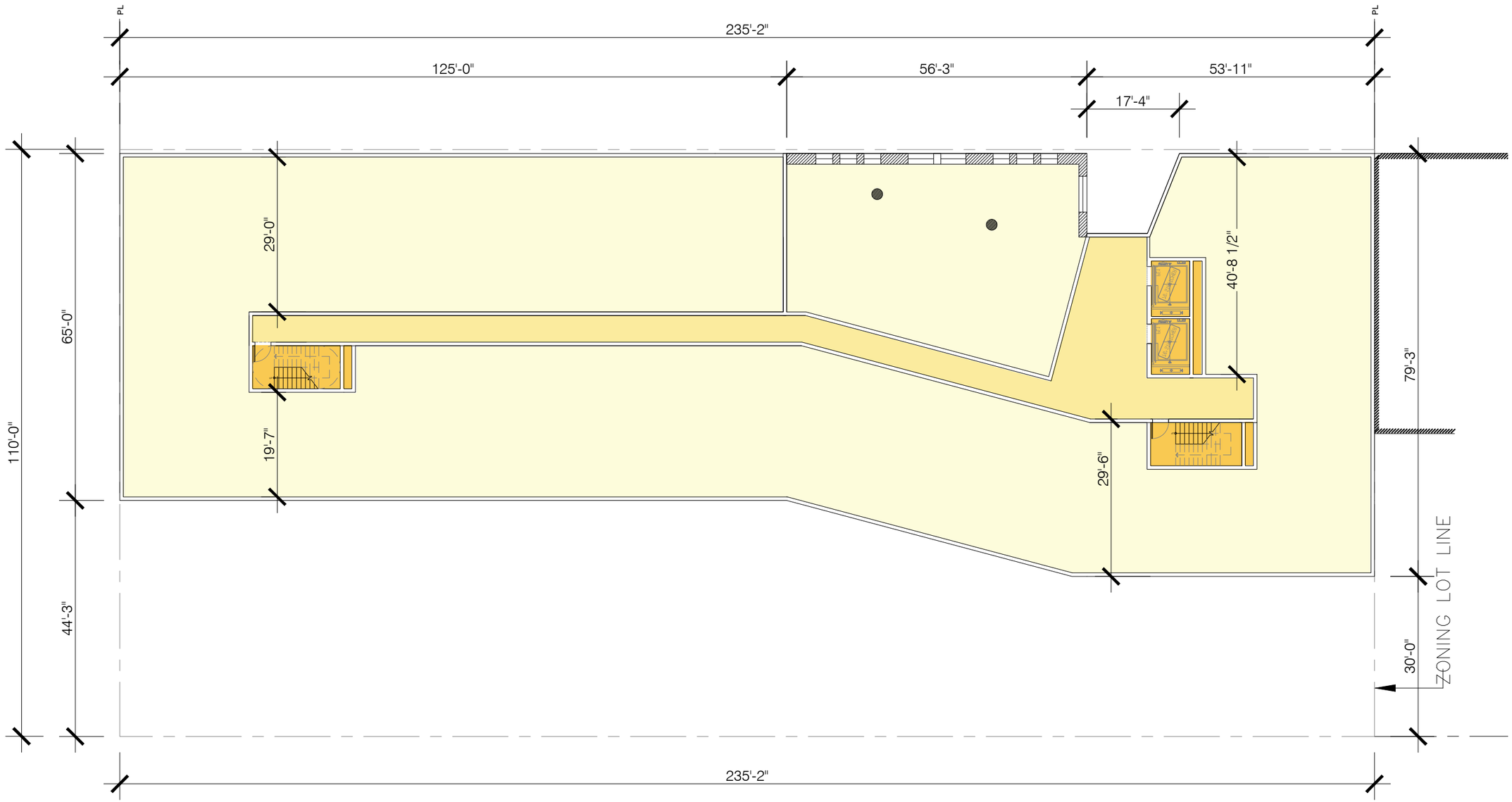

1 2ND FLOOR PLAN
1" = 20'-0"

NOTE: PLANS, SECTIONS AND DIAGRAMS ARE ILLUSTRATIVE AND SUBJECT TO CHANGE PENDING FUTURE BUILDING PERMIT APPLICATION.

STUDIO V
ARCHITECTURE

1010 PACIFIC STREET
NO. 15006

1010 Pacific Street
Brooklyn, NY 11238

OWNER / CLIENT
AVO CONSTRUCTION
65 Vestry Street
New York, NY 10013

ARCHITECT
STUDIO V ARCHITECTURE, PLLC
44 E 32nd Street New York NY 10016
T212.779.2288 F212.689.1325

CONSULTANTS

LAND USE ATTORNEY/ Sheldon Lobel, P.C.
18E 42st Street, New York, NY 10017
T 212.725.2727 F 212.725.3910

ENVIRONMENTAL CONSULTANT/ AECOM
100 Park Avenue, New York, NY 10017
T 212.708.6800

PUBLIC RELATIONS / DOMENIC RECCHIA
172 Gravesend Neck Rd, Brookly, NY 11223
T 718.336.5550

INCLUSIONARY HOUSING CONSULTANT/
BEST DEVELOPMENT GROUP
111 North Central Avenue Ste 425, Hartsdale, NY 10530
T 914.472.0180

DATE	DRAWN BY	CHECKED BY
08.15.2018	LC	JV

SHEET TITLE
2ND FLOOR PLAN

SCALE
1"=20' 0"

N

SHEET NO.
A-303.00

All ideas, design, arrangements and plans indicated or represented by this drawing are owned by, and are the property of STUDIO V Architecture PLLC. and were created, evolved, and developed for use on, and in connection with the specified project. None of such ideas, arrangements or plans shall be used by or disclosed to any person, firm or corporation for any purpose whatsoever without the written permission of STUDIO V Architecture PLLC. Written dimensions on this drawing shall have precedence over scaled dimensions. Contractors shall verify, and be responsible for all dimensions and conditions in the field and must notify STUDIO V Architecture, PLLC. of any deviation from dimensions and conditions depicted in these drawings. © 2018 STUDIO V Architecture, PLLC. All rights reserved.

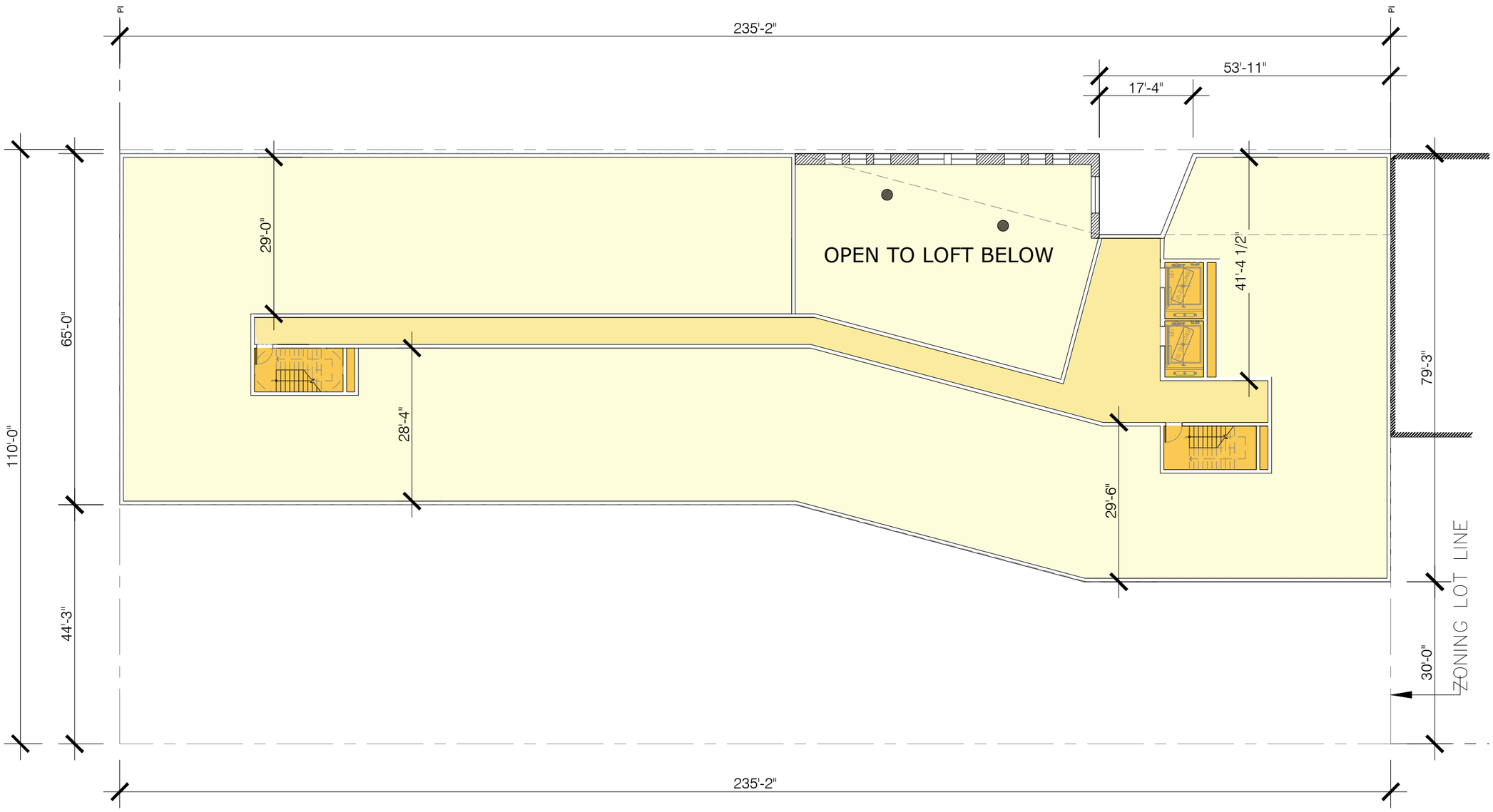

1 3RD FLOOR PLAN
1" = 20'-0"

NOTE: PLANS, SECTIONS AND DIAGRAMS ARE ILLUSTRATIVE AND SUBJECT TO CHANGE PENDING FUTURE BUILDING PERMIT APPLICATION.

STUDIO V
ARCHITECTURE

1010 PACIFIC STREET
NO. 15006

1010 Pacific Street
Brooklyn, NY 11238

OWNER / CLIENT
AVO CONSTRUCTION
65 Vestry Street
New York, NY 10013

ARCHITECT
STUDIO V ARCHITECTURE, PLLC
44 E 32nd Street New York NY 10016
T212.779.2288 F212.689.1325

CONSULTANTS

LAND USE ATTORNEY/ Sheldon Lobel, P.C.
18E 42st Street, New York, NY 10017
T 212.725.2727 F 212.725.3910

ENVIRONMENTAL CONSULTANT/ AECOM
100 Park Avenue, New York, NY 10017
T 212.708.6800

PUBLIC RELATIONS / DOMENIC RECCHIA
172 Gravesend Neck Rd, Brookly, NY 11223
T 718.336.5550

INCLUSIONARY HOUSING CONSULTANT/
BEST DEVELOPMENT GROUP
111 North Central Avenue Ste 425, Hartsdale, NY 10530
T 914.472.0180

DATE	DRAWN BY	CHECKED BY
08.15.2018	LC	JV

SHEET TITLE
3RD FLOOR PLAN

SCALE
1"=20' 0"

N

SHEET NO.
A-304.00

All ideas, design, arrangements and plans indicated or represented by this drawing are owned by, and are the property of STUDIO V Architecture PLLC. and were created, evolved, and developed for use on, and in connection with the specified project. None of such ideas, arrangements or plans shall be used by or disclosed to any person, firm or corporation for any purpose whatsoever without the written permission of STUDIO V Architecture PLLC. Written dimensions on this drawing shall have precedence over scaled dimensions. Contractors shall verify, and be responsible for all dimensions and conditions in the field and must notify STUDIO V Architecture, PLLC. of any deviation from dimensions and conditions depicted in these drawings. © 2018 STUDIO V Architecture, PLLC. All rights reserved.

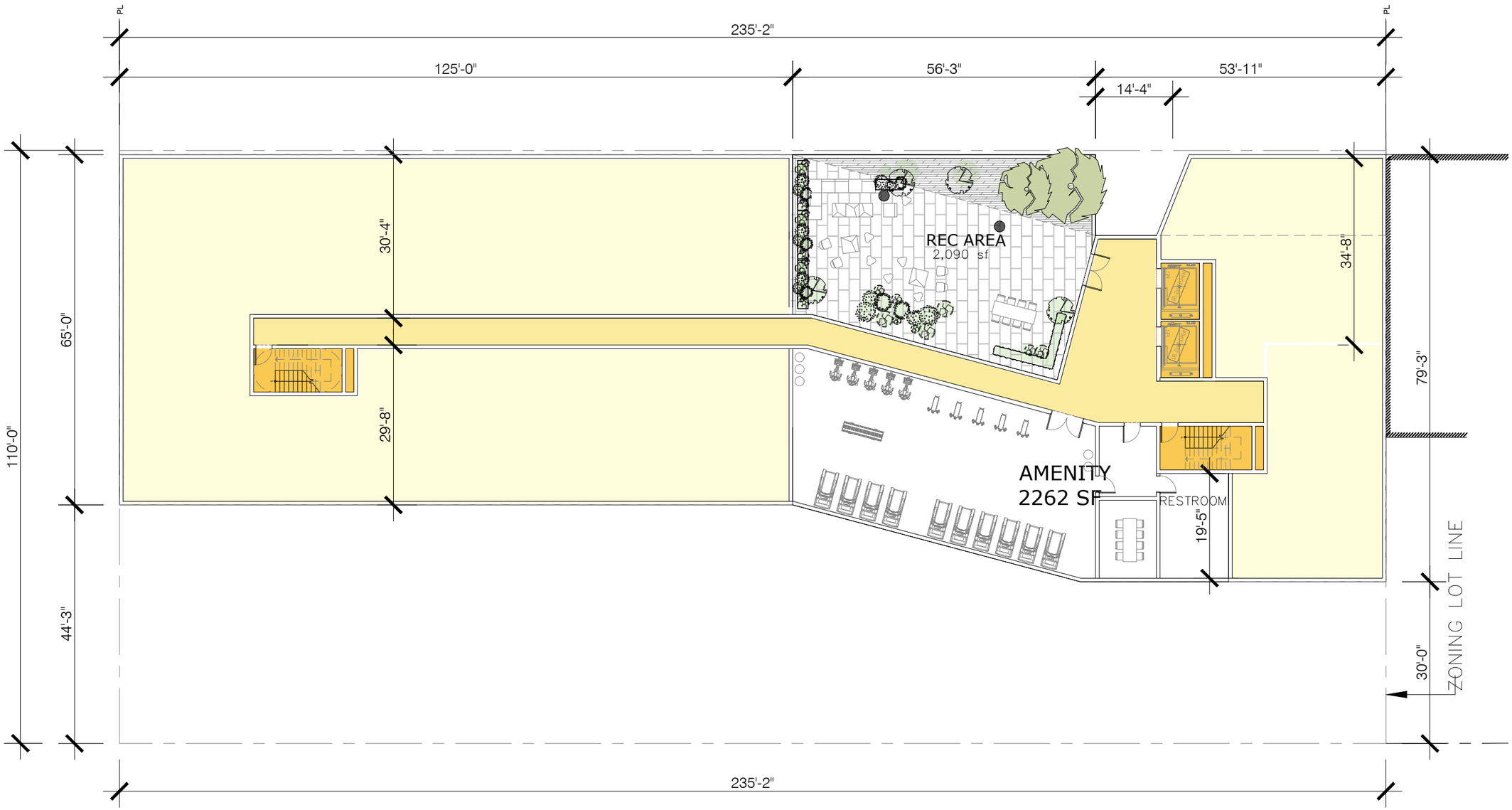

1 4TH FLOOR PLAN
1" = 20'-0"

NOTE: PLANS, SECTIONS AND DIAGRAMS ARE ILLUSTRATIVE AND SUBJECT TO CHANGE PENDING FUTURE BUILDING PERMIT APPLICATION.

STUDIO V
ARCHITECTURE

1010 PACIFIC STREET
NO. 15006

1010 Pacific Street
Brooklyn, NY 11238

OWNER / CLIENT

AVO CONSTRUCTION
65 Vestry Street
New York, NY 10013

ARCHITECT

STUDIO V ARCHITECTURE, PLLC
44 E 32nd Street New York NY 10016
T212.779.2288 F212.689.1325

CONSULTANTS

LAND USE ATTORNEY/ Sheldon Lobel, P.C.
18E 42st Street, New York, NY 10017
T 212.725.2727 F 212.725.3910

ENVIRONMENTAL CONSULTANT/ AECOM
100 Park Avenue, New York, NY 10017
T 212.708.6800

PUBLIC RELATIONS / DOMENIC RECCHIA
172 Gravesend Neck Rd, Brookly, NY 11223
T 718.336.5550

INCLUSIONARY HOUSING CONSULTANT/
BEST DEVELOPMENT GROUP
111 North Central Avenue Ste 425, Hartsdale, NY 10530
T 914.472.0180

DATE	DRAWN BY	CHECKED BY
08.15.2018	LC	JV

SHEET TITLE

4TH FLOOR PLAN

SCALE

1"=20' 0"

N

SHEET NO.

A-305.00

All ideas, design, arrangements and plans indicated or represented by this drawing are owned by, and are the property of STUDIO V Architecture PLLC. and were created, evolved, and developed for use on, and in connection with the specified project. None of such ideas, arrangements or plans shall be used by or disclosed to any person, firm or corporation for any purpose whatsoever without the written permission of STUDIO V Architecture PLLC. Written dimensions on this drawing shall have precedence over scaled dimensions. Contractors shall verify, and be responsible for all dimensions and conditions in the field and must notify STUDIO V Architecture, PLLC. of any deviation from dimensions and conditions depicted in these drawings. © 2018 STUDIO V Architecture, PLLC. All rights reserved.

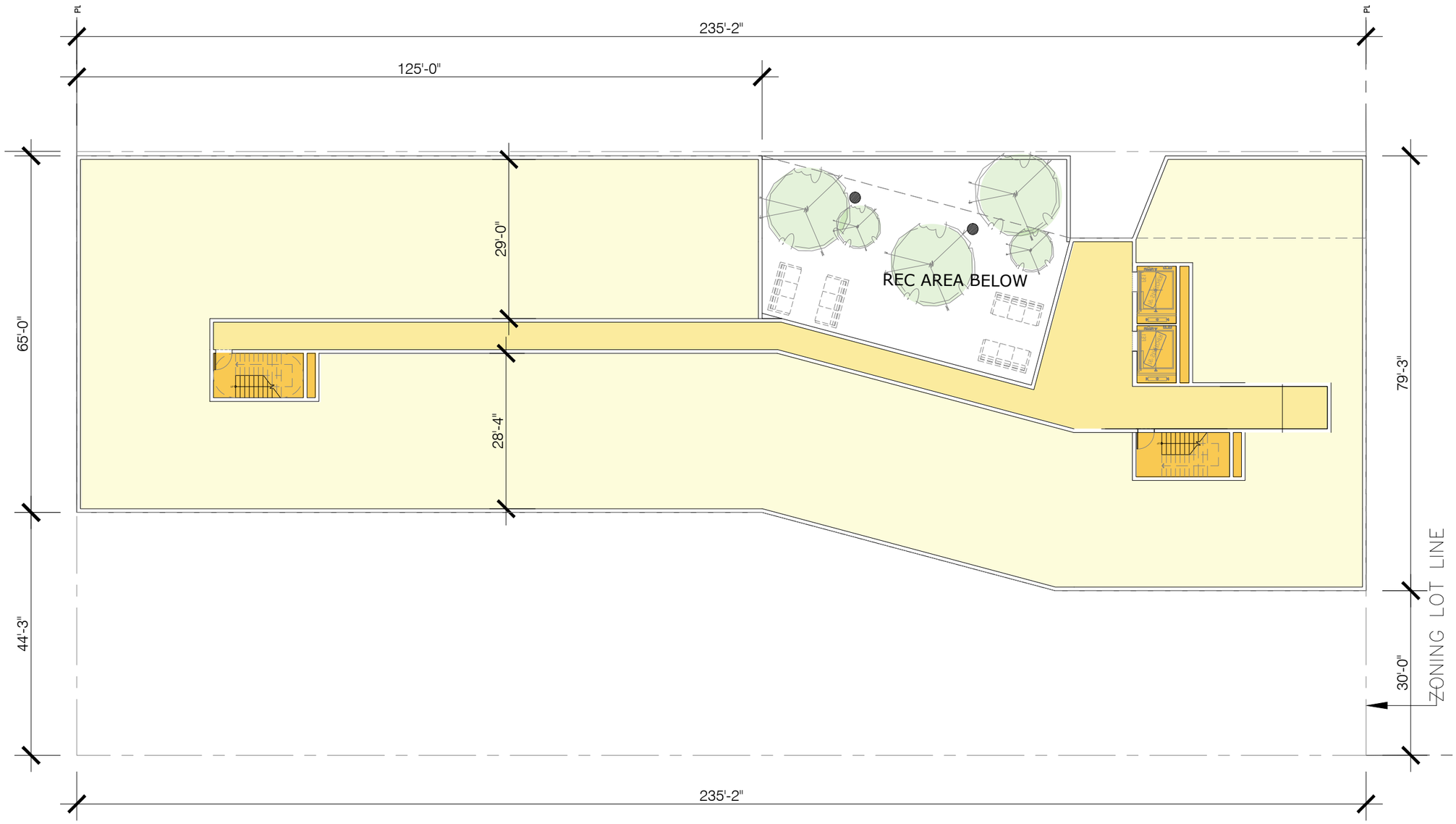

1 5TH FLOOR PLAN
1" = 20'-0"

NOTE: PLANS, SECTIONS AND DIAGRAMS ARE ILLUSTRATIVE AND SUBJECT TO CHANGE PENDING FUTURE BUILDING PERMIT APPLICATION.

STUDIO V
ARCHITECTURE

1010 PACIFIC STREET
NO. 15006

1010 Pacific Street
Brooklyn, NY 11238

OWNER / CLIENT
AVO CONSTRUCTION
65 Vestry Street
New York, NY 10013

ARCHITECT
STUDIO V ARCHITECTURE, PLLC
44 E 32nd Street New York NY 10016
T212.779.2288 F212.689.1325

CONSULTANTS

LAND USE ATTORNEY/ Sheldon Lobel, P.C.
18E 42st Street, New York, NY 10017
T 212.725.2727 F 212.725.3910

ENVIRONMENTAL CONSULTANT/ AECOM
100 Park Avenue, New York, NY 10017
T 212.708.6800

PUBLIC RELATIONS / DOMENIC RECCHIA
172 Gravesend Neck Rd, Brookly, NY 11223
T 718.336.5550

INCLUSIONARY HOUSING CONSULTANT/
BEST DEVELOPMENT GROUP
111 North Central Avenue Ste 425, Hartsdale, NY 10530
T 914.472.0180

DATE	DRAWN BY	CHECKED BY
08.15.2018	LC	JV

SHEET TITLE
5TH FLOOR PLAN

SCALE
1"=20' 0"

N

SHEET NO.
A-306.00

All ideas, design, arrangements and plans indicated or represented by this drawing are owned by, and are the property of STUDIO V Architecture PLLC. and were created, evolved, and developed for use on, and in connection with the specified project. None of such ideas, arrangements or plans shall be used by or disclosed to any person, firm or corporation for any purpose whatsoever without the written permission of STUDIO V Architecture PLLC. Written dimensions on this drawing shall have precedence over scaled dimensions. Contractors shall verify, and be responsible for all dimensions and conditions in the field and must notify STUDIO V Architecture, PLLC. of any deviation from dimensions and conditions depicted in these drawings. © 2018 STUDIO V Architecture, PLLC. All rights reserved.

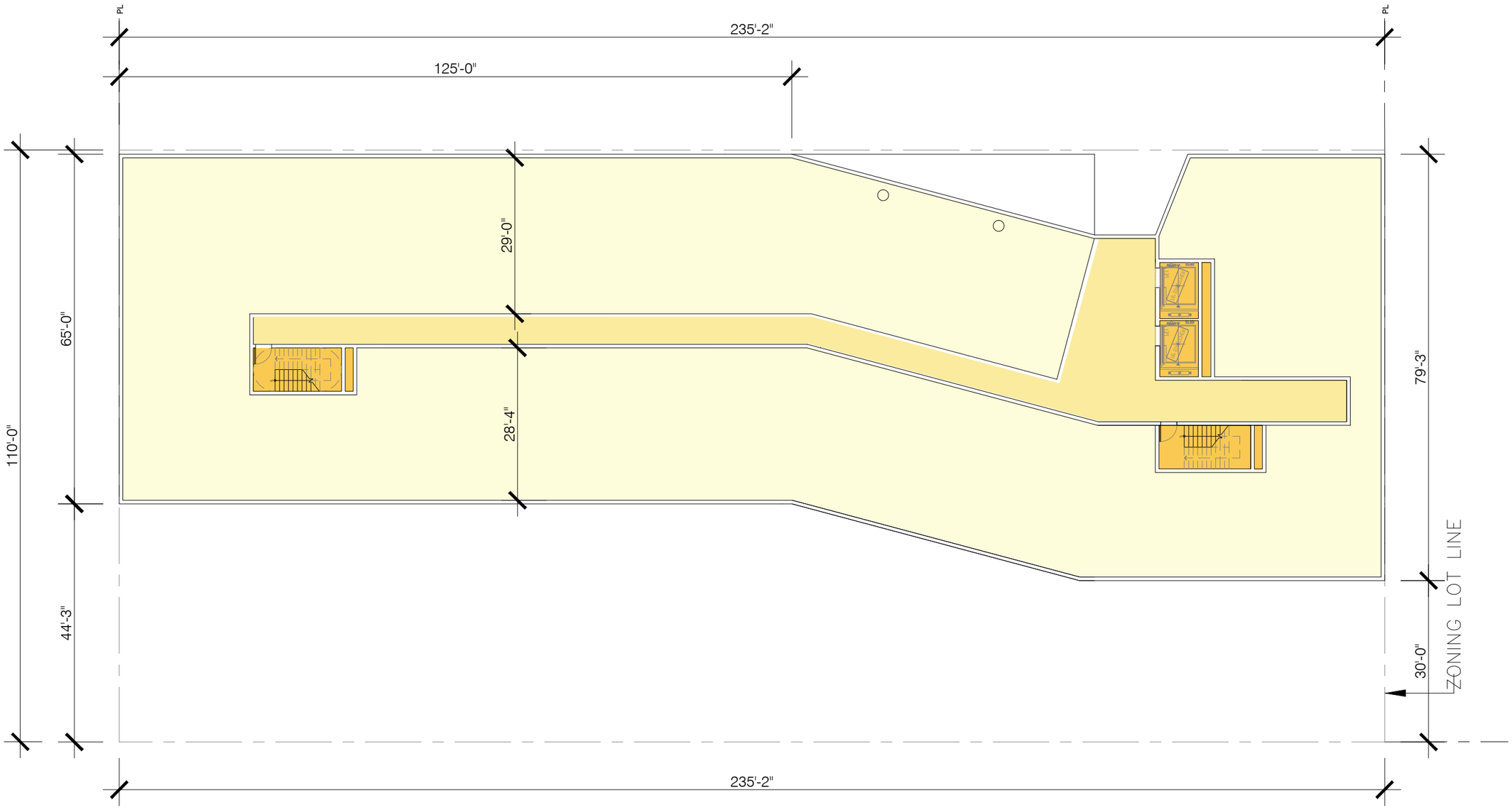

1 6TH FLOOR PLAN
1" = 20'-0"

NOTE: PLANS, SECTIONS AND DIAGRAMS ARE ILLUSTRATIVE AND SUBJECT TO CHANGE PENDING FUTURE BUILDING PERMIT APPLICATION.

STUDIO V
ARCHITECTURE

1010 PACIFIC STREET
NO. 15006

1010 Pacific Street
Brooklyn, NY 11238

OWNER / CLIENT
AVO CONSTRUCTION
65 Vestry Street
New York, NY 10013

ARCHITECT
STUDIO V ARCHITECTURE, PLLC
44 E 32nd Street New York NY 10016
T212.779.2288 F212.689.1325

CONSULTANTS

LAND USE ATTORNEY/ Sheldon Lobel, P.C.
18E 42st Street, New York, NY 10017
T 212.725.2727 F 212.725.3910

ENVIRONMENTAL CONSULTANT/ AECOM
100 Park Avenue, New York, NY 10017
T 212.708.6800

PUBLIC RELATIONS / DOMENIC RECCHIA
172 Gravesend Neck Rd, Brookly, NY 11223
T 718.336.5550

INCLUSIONARY HOUSING CONSULTANT/
BEST DEVELOPMENT GROUP
111 North Central Avenue Ste 425, Hartsdale, NY 10530
T 914.472.0180

DATE	DRAWN BY	CHECKED BY
08.15.2018	LC	JV

SHEET TITLE
6TH FLOOR PLAN

SCALE
1"=20' 0"

N

SHEET NO.
A-307.00

All ideas, design, arrangements and plans indicated or represented by this drawing are owned by, and are the property of STUDIO V Architecture PLLC. and were created, evolved, and developed for use on, and in connection with the specified project. None of such ideas, arrangements or plans shall be used by or disclosed to any person, firm or corporation for any purpose whatsoever without the written permission of STUDIO V Architecture PLLC. Written dimensions on this drawing shall have precedence over scaled dimensions. Contractors shall verify, and be responsible for all dimensions and conditions in the field and must notify STUDIO V Architecture, PLLC. of any deviation from dimensions and conditions depicted in these drawings. © 2018 STUDIO V Architecture, PLLC. All rights reserved.

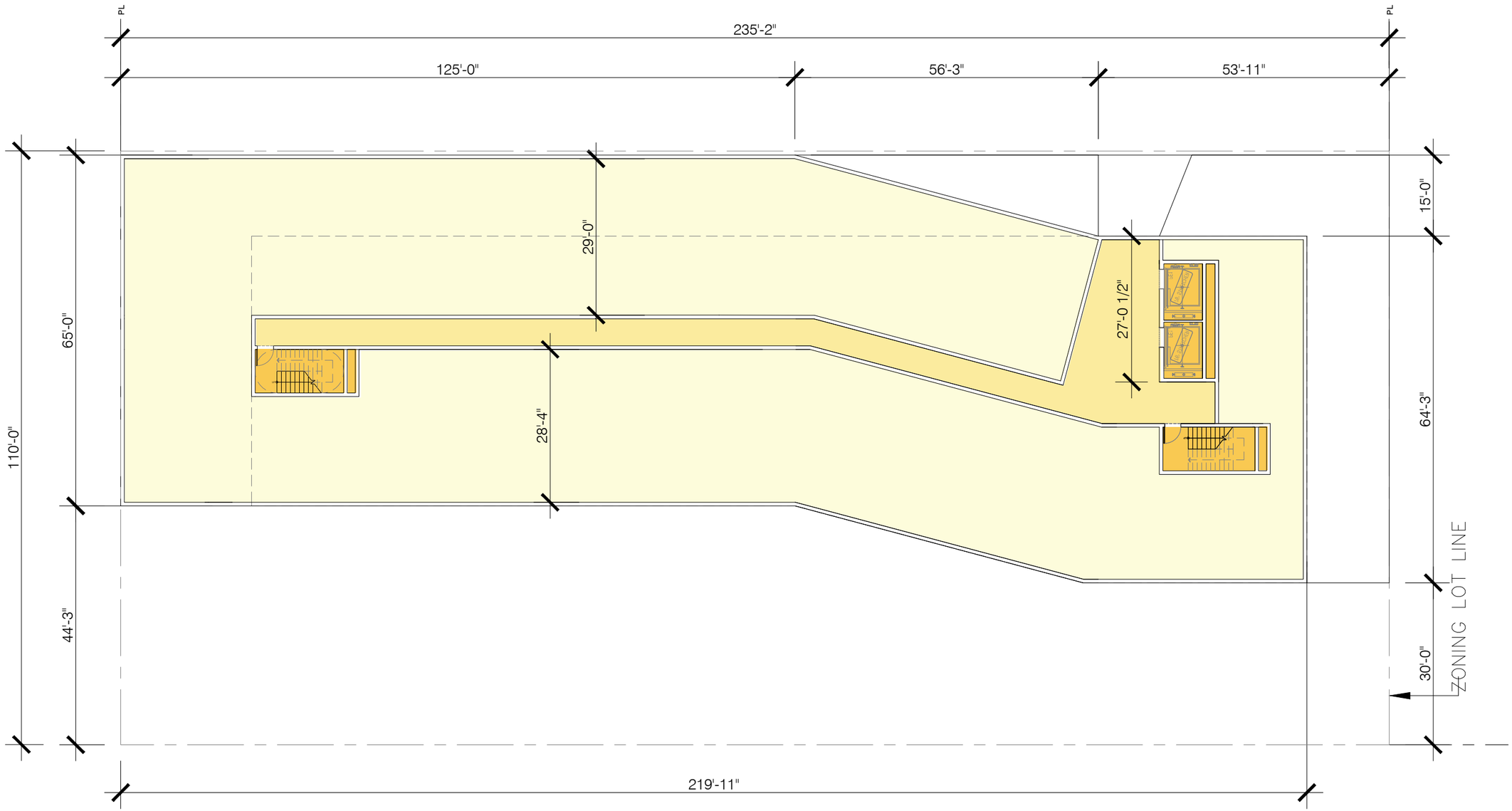

1 7TH FLOOR PLAN
1" = 20'-0"

NOTE: PLANS, SECTIONS AND DIAGRAMS ARE ILLUSTRATIVE AND SUBJECT TO CHANGE PENDING FUTURE BUILDING PERMIT APPLICATION.

STUDIO V
ARCHITECTURE

1010 PACIFIC STREET
NO. 15006

1010 Pacific Street
Brooklyn, NY 11238

OWNER / CLIENT
AVO CONSTRUCTION
65 Vestry Street
New York, NY 10013

ARCHITECT
STUDIO V ARCHITECTURE, PLLC
44 E 32nd Street New York NY 10016
T212.779.2288 F212.689.1325

CONSULTANTS

LAND USE ATTORNEY/ Sheldon Lobel, P.C.
18E 42st Street, New York, NY 10017
T 212.725.2727 F 212.725.3910

ENVIRONMENTAL CONSULTANT/ AECOM
100 Park Avenue, New York, NY 10017
T 212.708.6800

PUBLIC RELATIONS / DOMENIC RECCHIA
172 Gravesend Neck Rd, Brookly, NY 11223
T 718.336.5550

INCLUSIONARY HOUSING CONSULTANT/
BEST DEVELOPMENT GROUP
111 North Central Avenue Ste 425, Hartsdale, NY 10530
T 914.472.0180

DATE	DRAWN BY	CHECKED BY
08.15.2018	LC	JV

SHEET TITLE
7TH FLOOR PLAN

SCALE
1"=20' 0"

SHEET NO.
A-308.00

All ideas, design, arrangements and plans indicated or represented by this drawing are owned by, and are the property of STUDIO V Architecture PLLC. and were created, evolved, and developed for use on, and in connection with the specified project. None of such ideas, arrangements or plans shall be used by or disclosed to any person, firm or corporation for any purpose whatsoever without the written permission of STUDIO V Architecture PLLC. Written dimensions on this drawing shall have precedence over scaled dimensions. Contractors shall verify, and be responsible for all dimensions and conditions in the field and must notify STUDIO V Architecture, PLLC. of any deviation from dimensions and conditions depicted in these drawings. © 2018 STUDIO V Architecture, PLLC. All rights reserved.

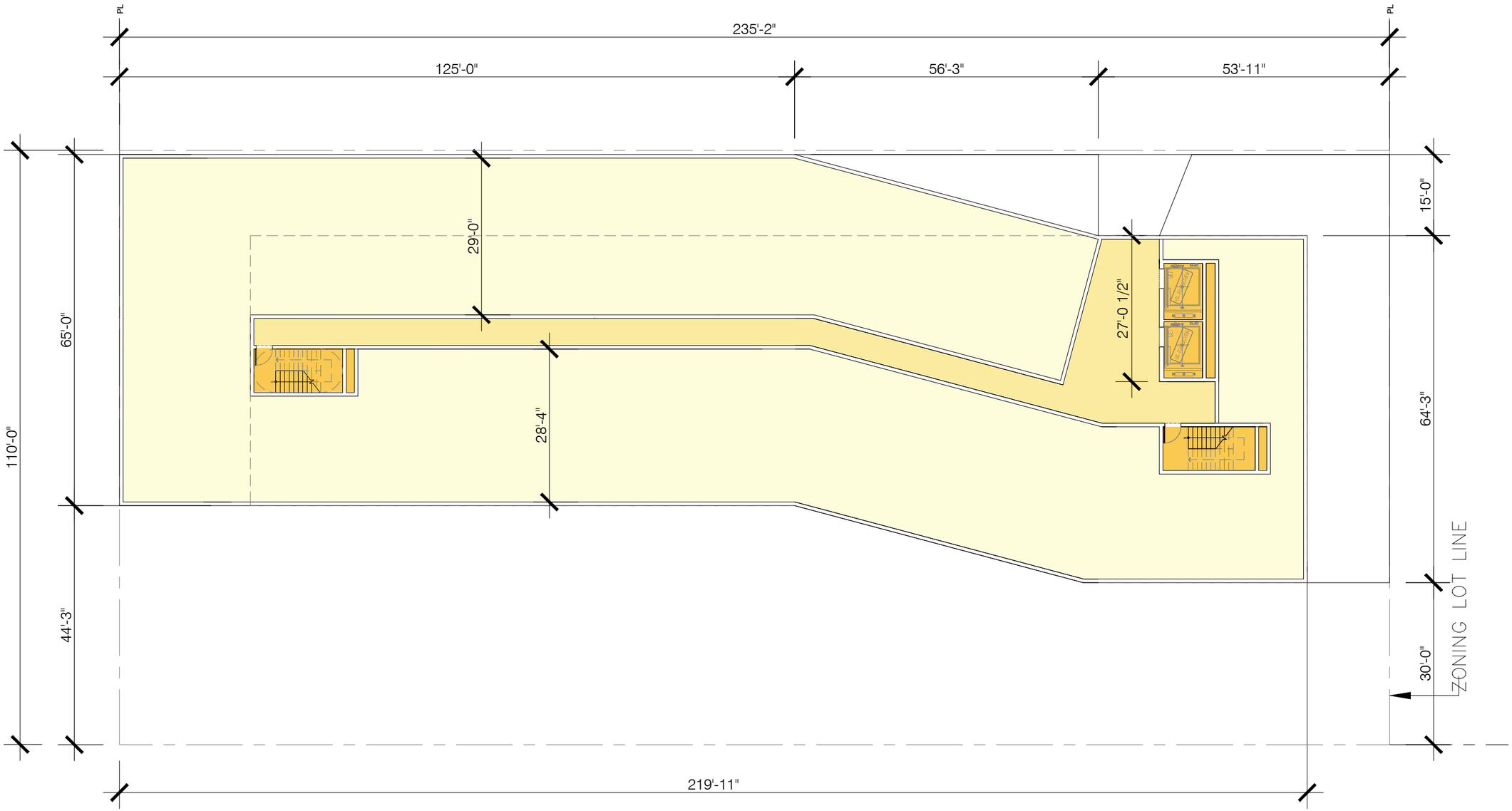

1 8TH FLOOR PLAN
1" = 20'-0"

NOTE: PLANS, SECTIONS AND DIAGRAMS ARE ILLUSTRATIVE AND SUBJECT TO CHANGE PENDING FUTURE BUILDING PERMIT APPLICATION.

STUDIO V
ARCHITECTURE

1010 PACIFIC STREET
NO. 15006

1010 Pacific Street
Brooklyn, NY 11238

OWNER / CLIENT
AVO CONSTRUCTION
65 Vestry Street
New York, NY 10013

ARCHITECT
STUDIO V ARCHITECTURE, PLLC
44 E 32nd Street New York NY 10016
T212.779.2288 F212.689.1325

CONSULTANTS

LAND USE ATTORNEY/ Sheldon Lobel, P.C.
18E 42st Street, New York, NY 10017
T 212.725.2727 F 212.725.3910

ENVIRONMENTAL CONSULTANT/ AECOM
100 Park Avenue, New York, NY 10017
T 212.708.6800

PUBLIC RELATIONS / DOMENIC RECCHIA
172 Gravesend Neck Rd, Brookly, NY 11223
T 718.336.5550

INCLUSIONARY HOUSING CONSULTANT/
BEST DEVELOPMENT GROUP
111 North Central Avenue Ste 425, Hartsdale, NY 10530
T 914.472.0180

DATE	DRAWN BY	CHECKED BY
08.15.2018	LC	JV

SHEET TITLE
8TH FLOOR PLAN

SCALE
1"=20' 0"

SHEET NO.
A-309.00

All ideas, design, arrangements and plans indicated or represented by this drawing are owned by, and are the property of STUDIO V Architecture PLLC. and were created, evolved, and developed for use on, and in connection with the specified project. None of such ideas, arrangements or plans shall be used by or disclosed to any person, firm or corporation for any purpose whatsoever without the written permission of STUDIO V Architecture PLLC. Written dimensions on this drawing shall have precedence over scaled dimensions. Contractors shall verify, and be responsible for all dimensions and conditions in the field and must notify STUDIO V Architecture, PLLC. of any deviation from dimensions and conditions depicted in these drawings. © 2018 STUDIO V Architecture, PLLC. All rights reserved.

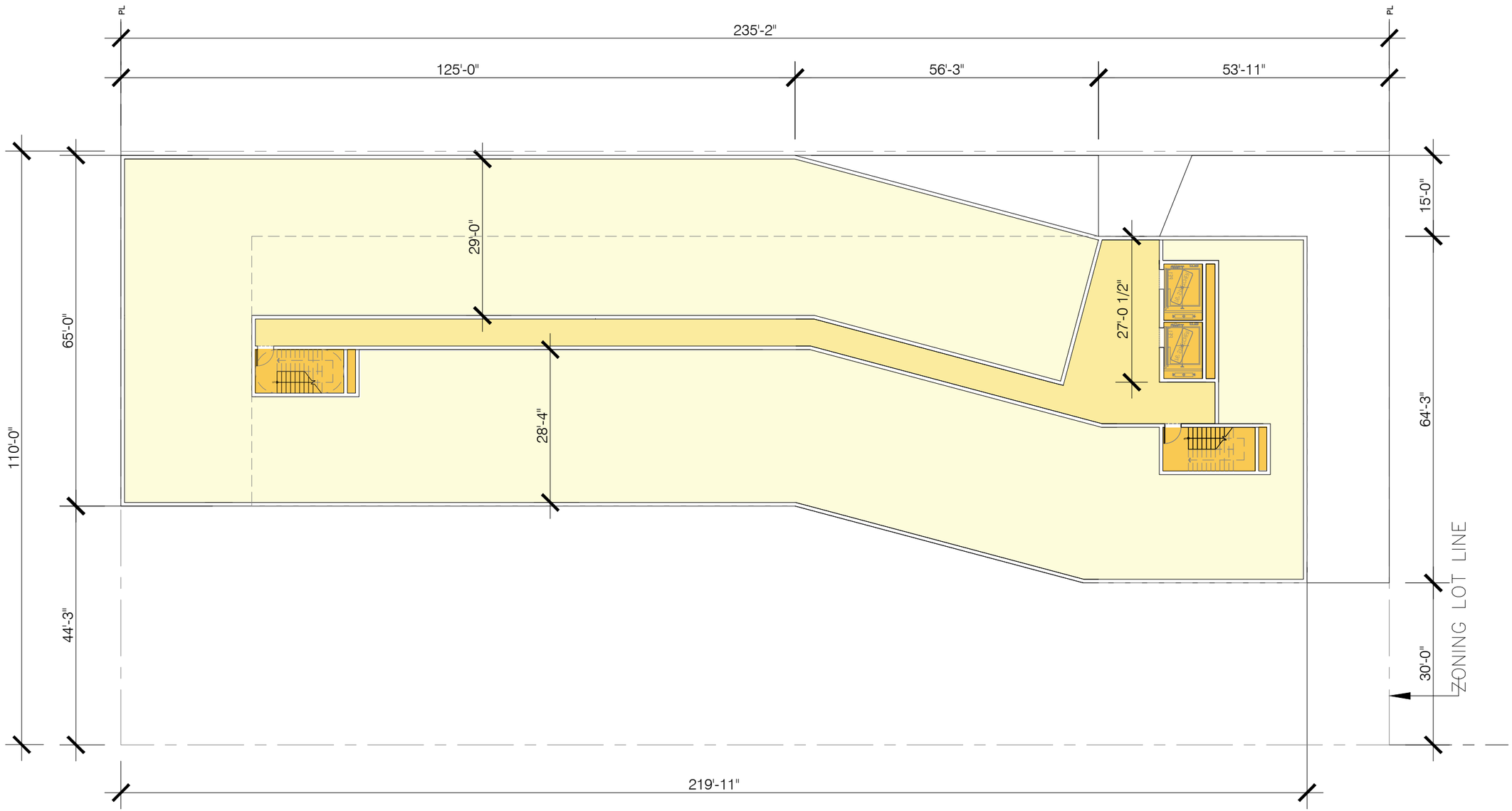

1 9TH FLOOR PLAN
1" = 20'-0"

NOTE: PLANS, SECTIONS AND DIAGRAMS ARE ILLUSTRATIVE AND SUBJECT TO CHANGE PENDING FUTURE BUILDING PERMIT APPLICATION.

STUDIO V
ARCHITECTURE

1010 PACIFIC STREET
NO. 15006

1010 Pacific Street
Brooklyn, NY 11238

OWNER / CLIENT
AVO CONSTRUCTION
65 Vestry Street
New York, NY 10013

ARCHITECT
STUDIO V ARCHITECTURE, PLLC
44 E 32nd Street New York NY 10016
T212.779.2288 F212.689.1325

CONSULTANTS

LAND USE ATTORNEY/ Sheldon Lobel, P.C.
18E 42st Street, New York, NY 10017
T 212.725.2727 F 212.725.3910

ENVIRONMENTAL CONSULTANT/ AECOM
100 Park Avenue, New York, NY 10017
T 212.708.6800

PUBLIC RELATIONS / DOMENIC RECCHIA
172 Gravesend Neck Rd, Brookly, NY 11223
T 718.336.5550

INCLUSIONARY HOUSING CONSULTANT/
BEST DEVELOPMENT GROUP
111 North Central Avenue Ste 425, Hartsdale, NY 10530
T 914.472.0180

DATE	DRAWN BY	CHECKED BY
08.15.2018	LC	JV

SHEET TITLE
9TH FLOOR PLAN

SCALE
1"=20' 0"

N

SHEET NO.
A-310.00

All ideas, design, arrangements and plans indicated or represented by this drawing are owned by, and are the property of STUDIO V Architecture PLLC. and were created, evolved, and developed for use on, and in connection with the specified project. None of such ideas, arrangements or plans shall be used by or disclosed to any person, firm or corporation for any purpose whatsoever without the written permission of STUDIO V Architecture PLLC. Written dimensions on this drawing shall have precedence over scaled dimensions. Contractors shall verify, and be responsible for all dimensions and conditions in the field and must notify STUDIO V Architecture, PLLC. of any deviation from dimensions and conditions depicted in these drawings. © 2018 STUDIO V Architecture, PLLC. All rights reserved.

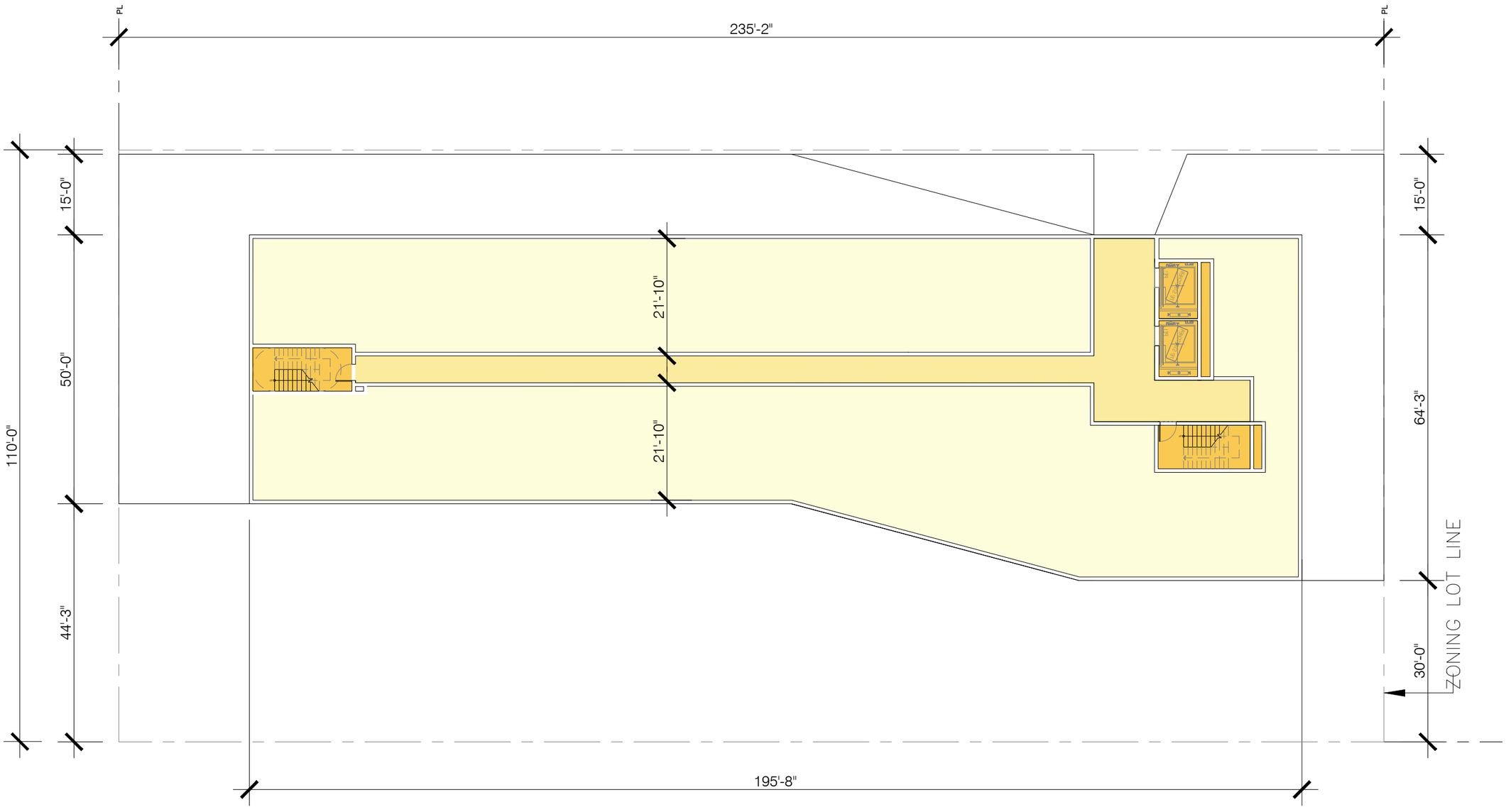

1 10TH FLOOR PLAN
1" = 20'-0"

NOTE: PLANS, SECTIONS AND DIAGRAMS ARE ILLUSTRATIVE AND SUBJECT TO CHANGE PENDING FUTURE BUILDING PERMIT APPLICATION.

STUDIO V
ARCHITECTURE

1010 PACIFIC STREET
NO. 15006

1010 Pacific Street
Brooklyn, NY 11238

OWNER / CLIENT
AVO CONSTRUCTION
65 Vestry Street
New York, NY 10013

ARCHITECT
STUDIO V ARCHITECTURE, PLLC
44 E 32nd Street New York NY 10016
T212.779.2288 F212.689.1325

CONSULTANTS

LAND USE ATTORNEY/ Sheldon Lobel, P.C.
18E 42st Street, New York, NY 10017
T 212.725.2727 F 212.725.3910

ENVIRONMENTAL CONSULTANT/ AECOM
100 Park Avenue, New York, NY 10017
T 212.708.6800

PUBLIC RELATIONS / DOMENIC RECCHIA
172 Gravesend Neck Rd, Brookly, NY 11223
T 718.336.5550

INCLUSIONARY HOUSING CONSULTANT/
BEST DEVELOPMENT GROUP
111 North Central Avenue Ste 425, Hartsdale, NY 10530
T 914.472.0180

DATE	DRAWN BY	CHECKED BY
08.15.2018	LC	JV

SHEET TITLE
10TH FLOOR PLAN

SCALE
1"=20' 0"

N

SHEET NO.
A-311.00

All ideas, design, arrangements and plans indicated or represented by this drawing are owned by, and are the property of STUDIO V Architecture PLLC. and were created, evolved, and developed for use on, and in connection with the specified project. None of such ideas, arrangements or plans shall be used by or disclosed to any person, firm or corporation for any purpose whatsoever without the written permission of STUDIO V Architecture PLLC. Written dimensions on this drawing shall have precedence over scaled dimensions. Contractors shall verify, and be responsible for all dimensions and conditions in the field and must notify STUDIO V Architecture, PLLC. of any deviation from dimensions and conditions depicted in these drawings. © 2018 STUDIO V Architecture, PLLC. All rights reserved.

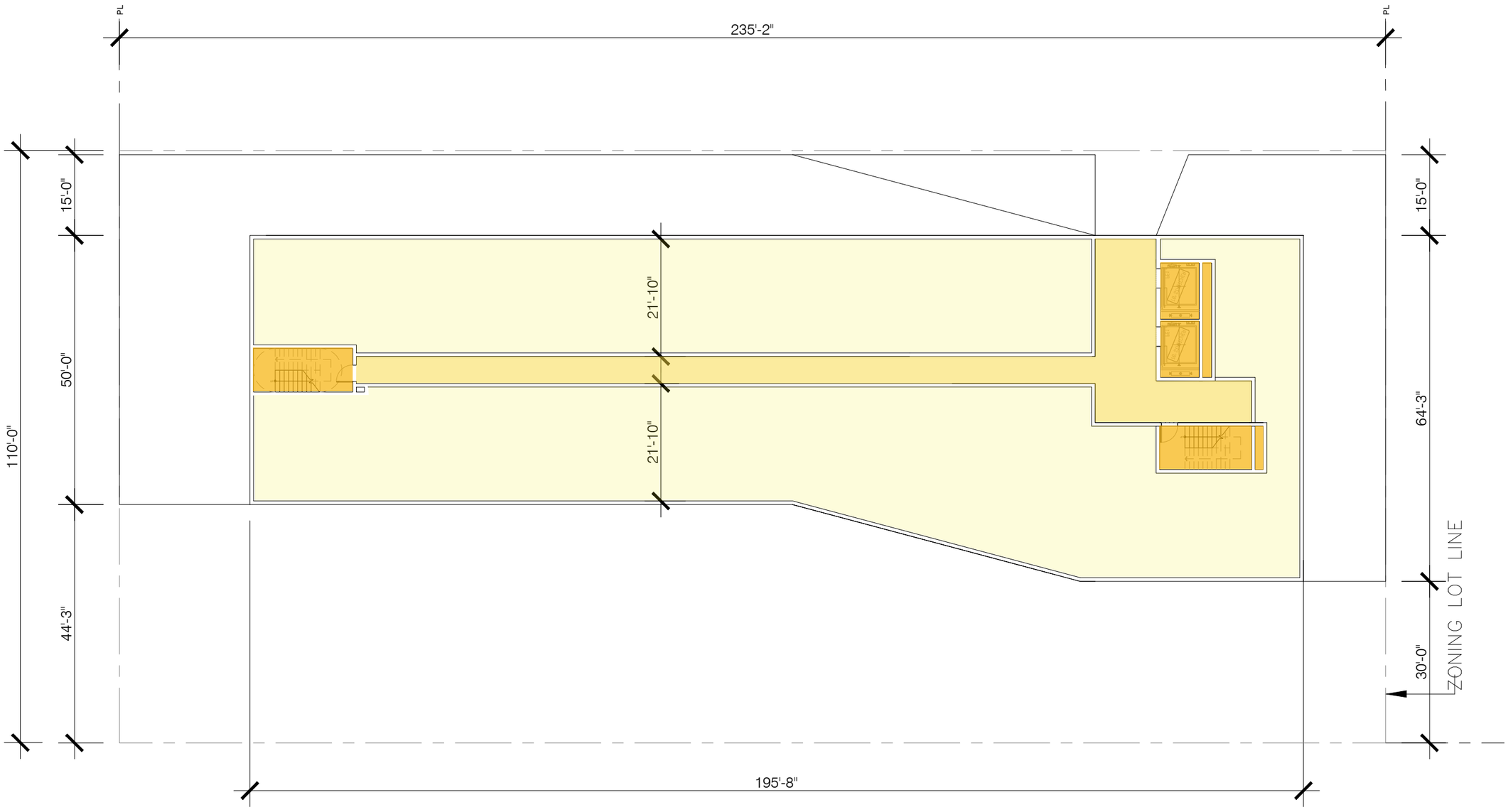

1 11TH FLOOR PLAN
1" = 20'-0"

NOTE: PLANS, SECTIONS AND DIAGRAMS ARE ILLUSTRATIVE AND SUBJECT TO CHANGE PENDING FUTURE BUILDING PERMIT APPLICATION.

STUDIO V
ARCHITECTURE

1010 PACIFIC STREET
NO. 15006

1010 Pacific Street
Brooklyn, NY 11238

OWNER / CLIENT
AVO CONSTRUCTION
65 Vestry Street
New York, NY 10013

ARCHITECT
STUDIO V ARCHITECTURE, PLLC
44 E 32nd Street New York NY 10016
T212.779.2288 F212.689.1325

CONSULTANTS

LAND USE ATTORNEY/ Sheldon Lobel, P.C.
18E 42st Street, New York, NY 10017
T 212.725.2727 F 212.725.3910

ENVIRONMENTAL CONSULTANT/ AECOM
100 Park Avenue, New York, NY 10017
T 212.708.6800

PUBLIC RELATIONS / DOMENIC RECCHIA
172 Gravesend Neck Rd, Brookly, NY 11223
T 718.336.5550

INCLUSIONARY HOUSING CONSULTANT/
BEST DEVELOPMENT GROUP
111 North Central Avenue Ste 425, Hartsdale, NY 10530
T 914.472.0180

DATE	DRAWN BY	CHECKED BY
08.15.2018	LC	JV

SHEET TITLE
11TH FLOOR PLAN

SCALE
1"=20' 0"

N

SHEET NO.
A-312.00

All ideas, design, arrangements and plans indicated or represented by this drawing are owned by, and are the property of STUDIO V Architecture PLLC. and were created, evolved, and developed for use on, and in connection with the specified project. None of such ideas, arrangements or plans shall be used by or disclosed to any person, firm or corporation for any purpose whatsoever without the written permission of STUDIO V Architecture PLLC. Written dimensions on this drawing shall have precedence over scaled dimensions. Contractors shall verify, and be responsible for all dimensions and conditions in the field and must notify STUDIO V Architecture, PLLC. of any deviation from dimensions and conditions depicted in these drawings. © 2018 STUDIO V Architecture, PLLC. All rights reserved.

Appendix B:
Agency Correspondence

NYC Environmental Protection

Emily Lloyd
Commissioner

Angela Licata
Deputy Commissioner of Sustainability

59-17 Junction Blvd.
Flushing, NY 11373

Tel. (718) 595-4398
Fax (718) 595-4479
alicata@dep.nyc.gov

April 5, 2016

Mr. Christopher Lee
New York City Department of City Planning
22 Reade Street
New York, New York 10007

Re: 1010 Pacific Street Zoning Map & Text Amendment
Block 1133, Lots 32 and 42 (Applicant Control Sites)
Block 1133, Lots 45-49 and 51-53 (Sites not under applicant control)
CEQR # 16DCP134 K
Brooklyn, New York

Dear Mr. Lee:

The New York City Department of Environmental Protection, Bureau of Sustainability (DEP) has reviewed the February 2016 Environmental Assessment Statement prepared by AECOM USA, Inc., the February 2015 Phase I Environmental Site Assessment (Phase 1) prepared by Environmental Planning & Management, Inc., and the March 2015 Limited Phase II Assessment (**Limited Phase II**) conducted by Integral Engineering, PC on behalf of 1010 Pacific Street LLC., (applicant) for the above referenced. It is our understanding that the applicant is seeking a Zoning Map Amendment to rezone portions of Brooklyn Block 1133 from an M1-1 District to an R7D/C1-4 to facilitate the construction of a 10-story mixed residential and community facility building. As currently proposed, the building will consist of approximately 128 dwelling units with a maximum residential floor area of 151,544 gross square feet (gsf), 144,760 zoning square feet and approximately 6,134 gross square feet (gsf) of community facility floor area at 1010 Pacific Street, Block 1133, Lots 32 and 42 (applicant control sites). In addition, the applicant is also proposing a Zoning Text Amendment to map an inclusionary housing area (IHA) over the rezoning area. The applicant would therefore allocate twenty-five percent of the dwelling units in the proposed development as affordable. The rezoning area is a portion of a block bounded by Dean Street to the south, Grand Avenue to the west, Pacific Street to the north and Classon Avenue to the east in Brooklyn Community district 8. It should be noted that Block 1133, Lots 45-49 and 51-53 are sites not own and or under applicant control, but included in the rezoning action.

1010 Pacific Street (Applicant control sites)
1133, Lots 32 and 42

The February 2015 Phase I revealed that historical on-site and surrounding area land uses consisting of residential, commercial and manufacturing uses including a two-story, approximately 23,188 square foot warehouse (Lot 32) and accessory parking lot (Lot 42), manufacture of commercial display hardware, construction site, vacant lot occupied with numerous derelict trucks and trailers, gas stations, auto repair, auto service station, truck body repair, chemical works and chemical

storage structure, coal and wood yard, General Insulated & Machine Co., varnish company, National Biscuit Co. facility, chemical works, garage and automotive showroom improved with two unused gasoline tanks, automotive brakes service company, electrical contractor's facility, improved with several gasoline and fuel oil tanks, automotive filling station, a large cleaning and dyeing works company, chemical canning factory, chemical supply facility, manufacturing facility of an indeterminate nature, etc. The New York State Department of Environmental Conservation (NYSDEC) database revealed 24 Spills within ¼ mile radius of the site, 28 leaking tanks sites within 1/8 mile radius of the property and two drycleaners facilities within ¼ mile radius of the site. It should be noted that 63 historical auto stations and 10 historical cleaners were also revealed within ¼ mile radius of the proposed development site.

During the March 2015 field work, Integral Engineering, PC conducted six soil borings (SB-1 through SB-5 and SB-7) to evaluate the shallow subsurface conditions of the building cellar, warehouse and vacant lot. Two soil samples were collected from each boring, with the exception of SB-1 (one soil sample was collected) and analyzed for volatile organic compounds (VOCs) by United States Environmental Protection Agency (EPA) Method 8260C, semi-volatile organic compounds (SVOCs) by EPA Method 8270D, polychlorinated biphenyls (PCBs) by EPA Method 8082, and Target Analyte List (TAL) by EPA Method 6010/7471. It should be noted that the **March 2015 Limited Phase II** investigation was conducted without DEP approval. Soil vapor sampling, groundwater samples and pesticides were not conducted during the March 2015 Limited Phase II Investigation.

The soil analytical results revealed VOCs and PCBs were either non-detect or below New York State Department of Environmental Conservation (NYSDEC) 6 NYCRR Part 375 Restricted Residential and/or Unrestricted Use Soil Cleanup Objectives (SCOs). Several SVOCs and several metals including lead and mercury were detected above NYSDEC Unrestricted and/ or Residential Use SCOs.

Based on our review of the submitted documents, we have the following comments/recommendations to DCP:

Sites not under applicant control
Block 1133, Lots 45-49 and 51-53

Based on prior on-site and/or surrounding area land uses which could result in environmental contamination, DEP recommends that an "E" designation for hazardous materials should be placed on the zoning map pursuant to Section 11-15 of the New York City Zoning Resolution for the subject properties. The "E" designation will ensure that testing and mitigation will be provided as necessary before any future development and/or soil disturbance. Further hazardous materials assessments should be coordinated through the Mayor's Office of Environmental Remediation.

1010 Pacific Street (Applicant control sites)
1133, Lots 32 and 42

- DCP should inform the applicant that based on the historical on-site and/or surrounding area land uses, a Phase II Environmental Site Assessment (Phase II) is necessary to adequately identify/characterize the surface and subsurface soil/groundwater of the subject parcels. A Phase II Investigative Protocol/Work Plan summarizing the proposed drilling, soil, groundwater, and soil vapor sampling activities of the site should be submitted to DEP for review and approval. The Work Plan should include blueprints and/or site plans displaying the current surface grade and sub-grade elevations and a site map depicting the proposed soil/groundwater boring locations and soil vapor sampling locations. Soil and groundwater samples should be collected and analyzed by a New York State Department of Health (NYSDOH) Environmental Laboratory Approval Program (ELAP) certified laboratory for the presence of volatile organic compounds (VOCs) by United States Environmental Protection Agency (EPA) Method 8260, semi-volatile organic compounds (SVOCs) by EPA Method 8270, pesticides by EPA Method 8081, polychlorinated biphenyls (PCBs) by EPA Method 8082 and Target Analyte List metals (TAL) (filtered and unfiltered for groundwater samples) and soil vapor samples by EPA Method TO-15. The soil vapor sampling should be conducted in accordance with NYSDOH's October 2006 Guidance for Evaluating Soil Vapor Intrusion in the State of New York. An Investigative Health and Safety Plan (HASP) should also be submitted to DEP for review and approval.

Future correspondence and submittal related to this project should include the following CEQR number 16**DCP134K**. If you have any questions, you may contact Maurice Winter at (718) 595-4514.

Sincerely,

Maurice S. Winter
Deputy Director, Site Assessment

c: E. Mahoney
W. Maurice
W. Yu
T. Estesen
M. Wimbish
R. Dobruskin-DCP
O. Abinader-DCP

Landmarks Preservation Commission

1 Centre Street
9th Floor North
New York, NY 10007

Voice (212)-669-7700
Fax (212)-669-7960
http://nyc.gov/landmarks

ENVIRONMENTAL REVIEW

Project number: NO LEAD AGENCY / LA-CEQR-K
Project: PACIFIC STREET REZONING
Date received: 2/1/2016

Properties with no Architectural or Archaeological significance:

1) ADDRESS: 998 Pacific Street, BBL: 3011330032
2) ADDRESS: 1018 Pacific Street, BBL: 3011330042
3) ADDRESS: 1024 Pacific Street, BBL: 3011330045
4) ADDRESS: 1026 Pacific Street, BBL: 3011330046
5) ADDRESS: 1028 Pacific Street, BBL: 3011330047
6) ADDRESS: 1030 Pacific Street, BBL: 3011330048
7) ADDRESS: 616 Classon Avenue, BBL: 3011330049
8) ADDRESS: 618 Classon Avenue, BBL: 3011330051
9) ADDRESS: 620 Classon Avenue, BBL: 3011330052
10) ADDRESS: 622 Classon Avenue, BBL: 3011330053

Gina Santucci 2/18/2016

SIGNATURE DATE
Gina Santucci, Environmental Review Coordinator

File Name: 31179_FSO_DNP_02042016.doc

Appendix C:
Transportation Study Figures

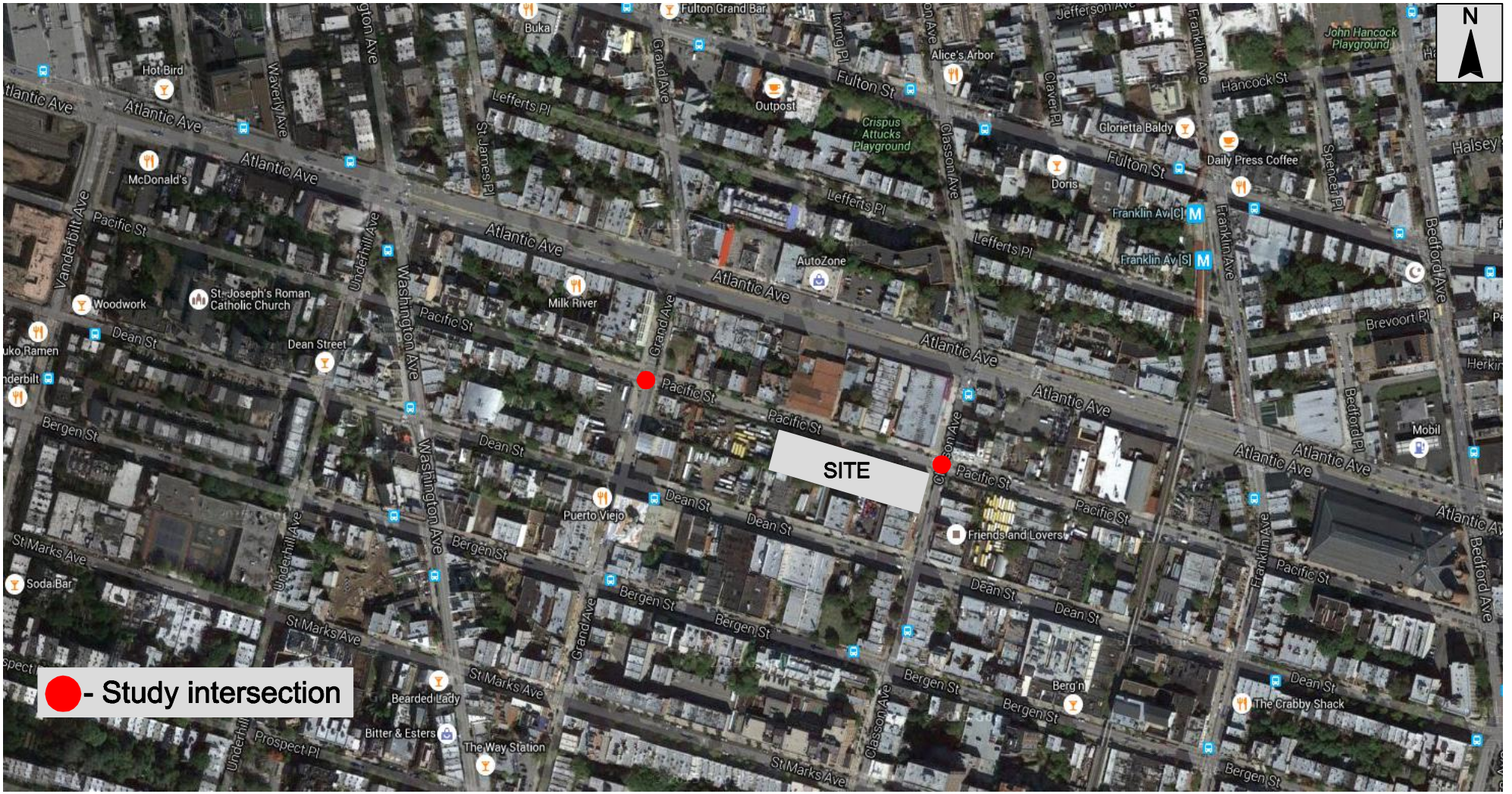

AECOM

1010 Pacific Street
Brooklyn, New York

Study Area Map
Figure 1

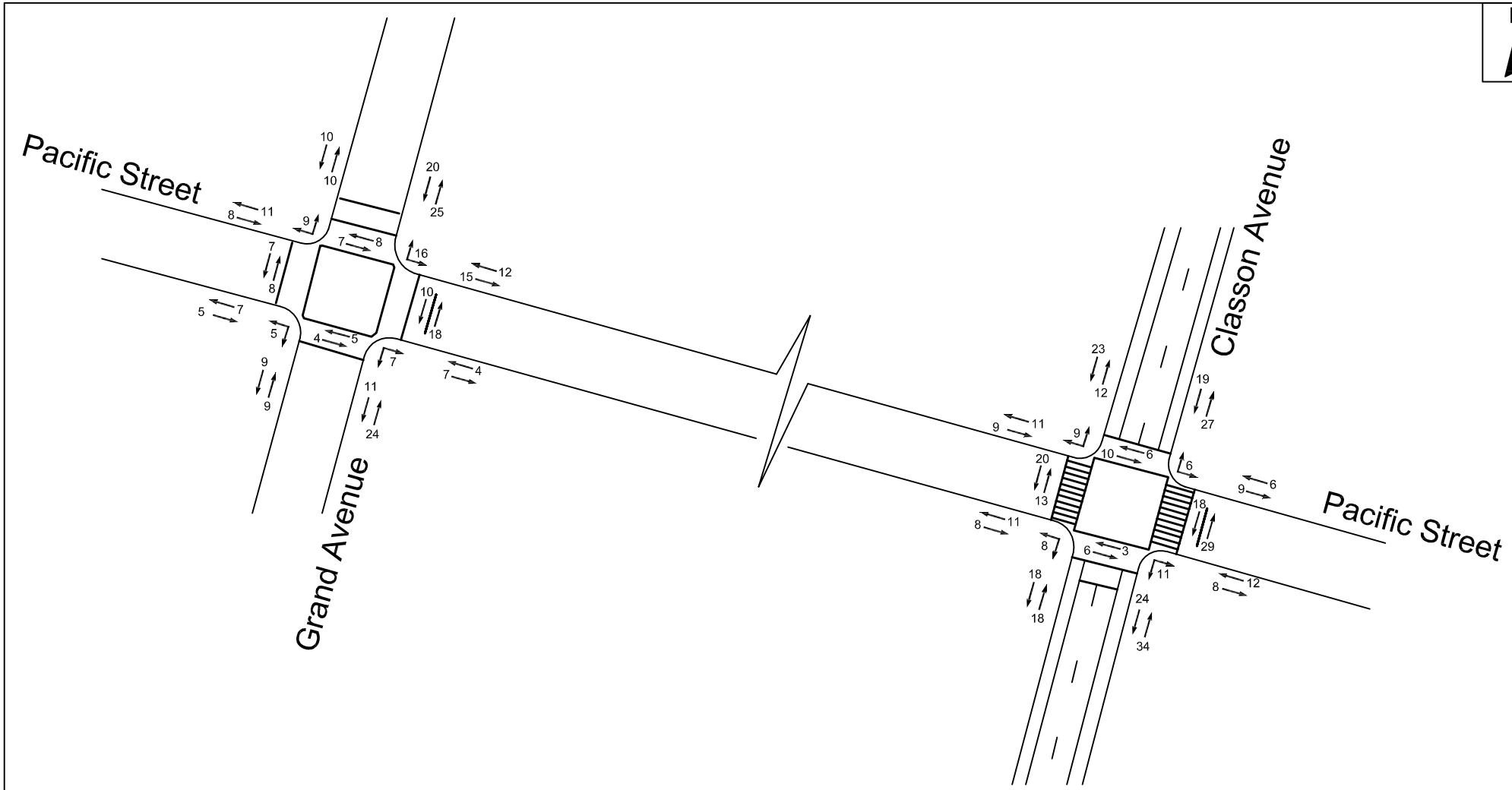

AECOM

1010 Pacific Street
Brooklyn, New York

Year 2015 Existing Pedestrian Volumes
Weekday Midday Peak Hour
Figure 2

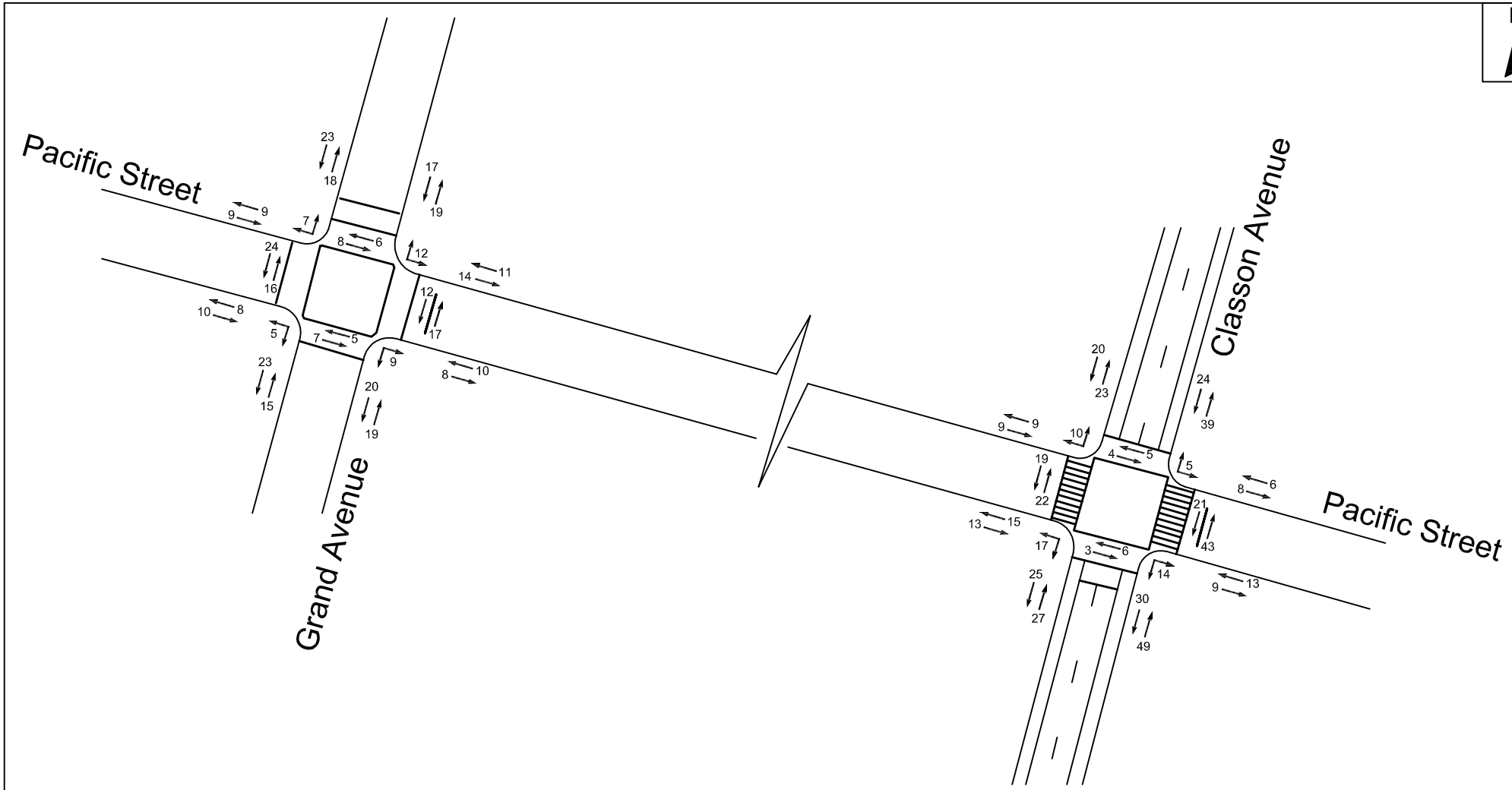

AECOM

1010 Pacific Street
Brooklyn, New York

Year 2015 Existing Pedestrian Volumes
Weekday PM Peak Hour
Figure 3

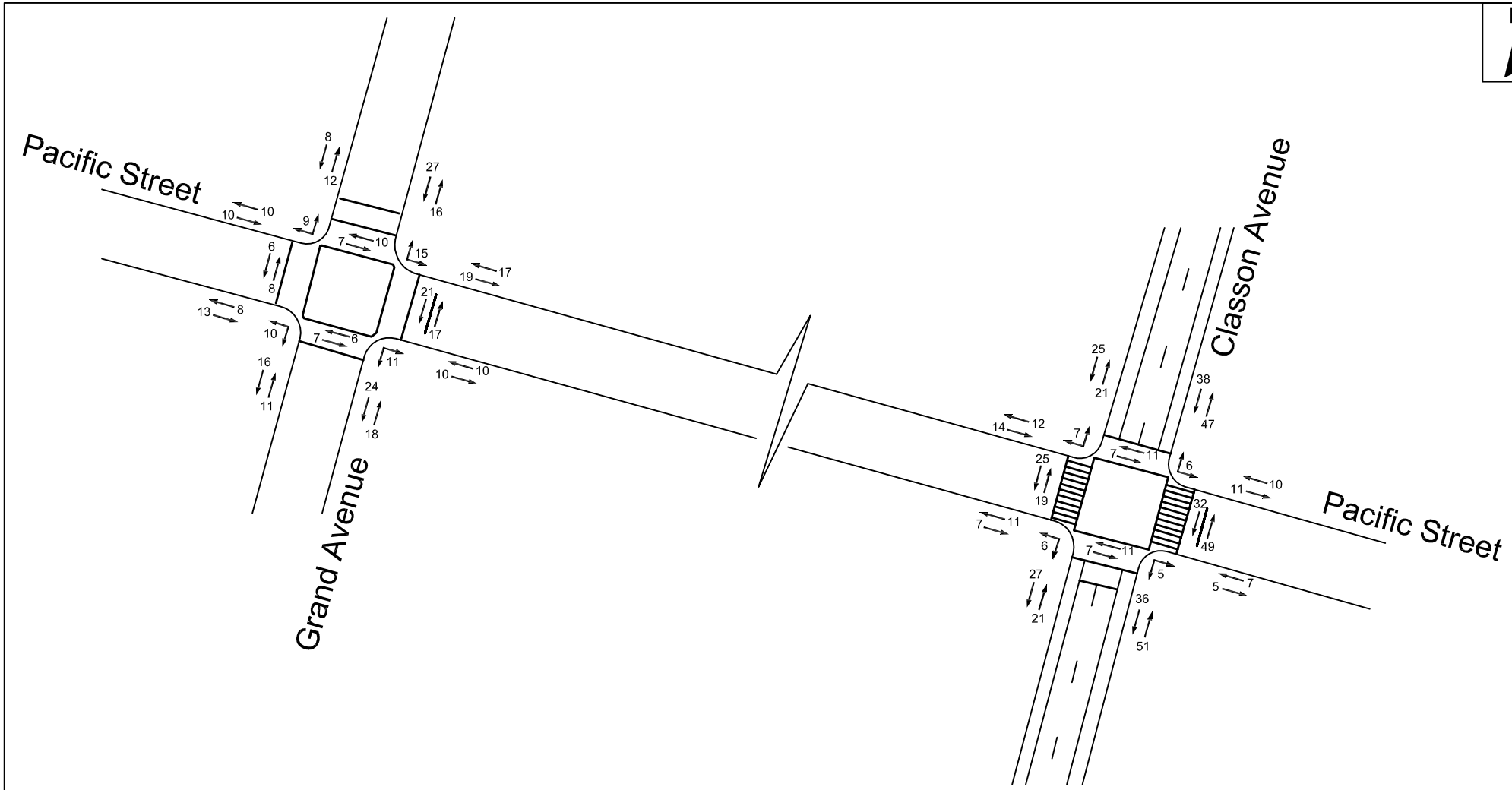

AECOM

1010 Pacific Street
Brooklyn, New York

Year 2015 Existing Pedestrian Volumes
Saturday Midday Peak Hour
Figure 4

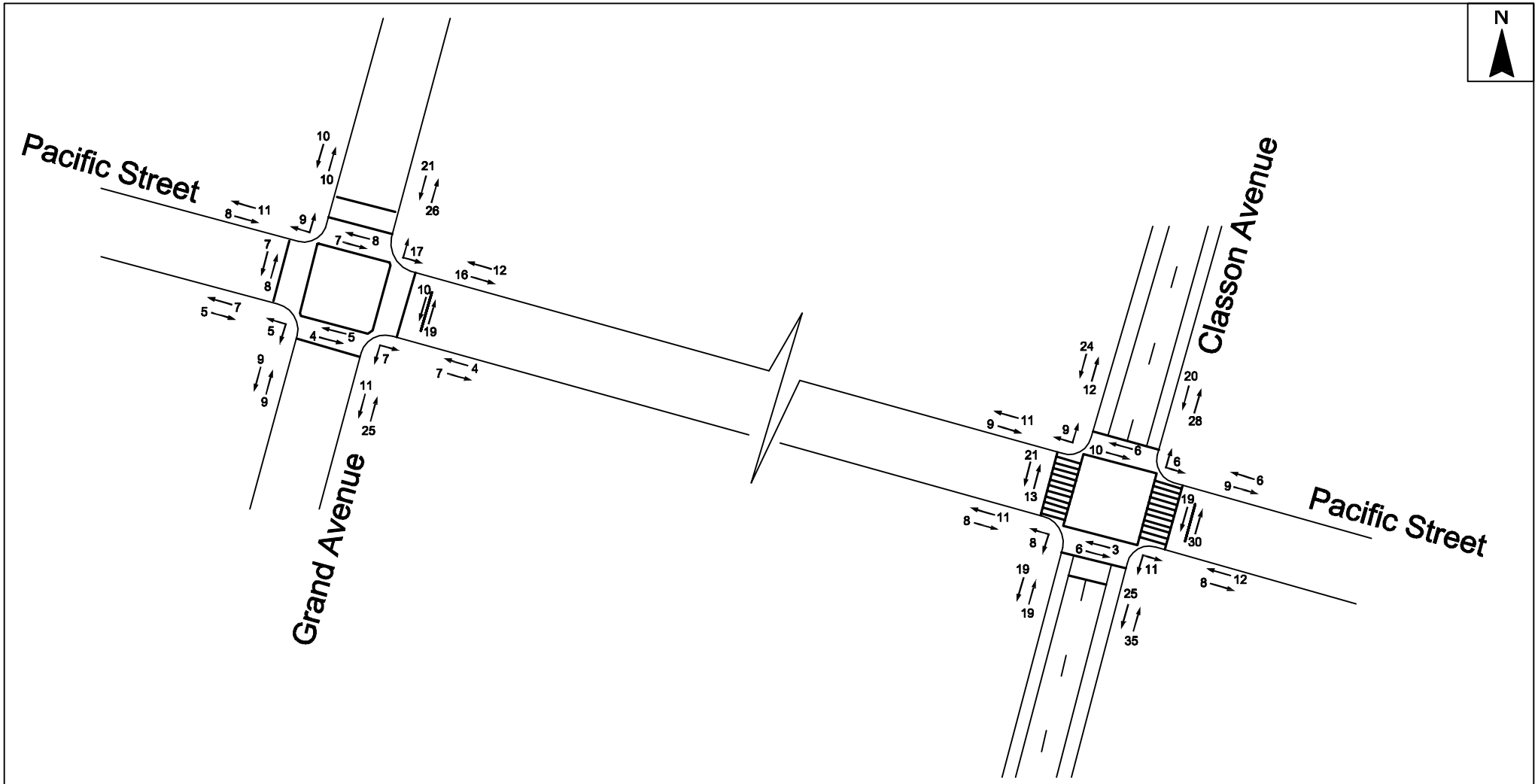

AECOM

1010 Pacific Street
Brooklyn, New York

Year 2023 No-Action Pedestrian Volumes
Weekday Midday Peak Hour
Figure 5

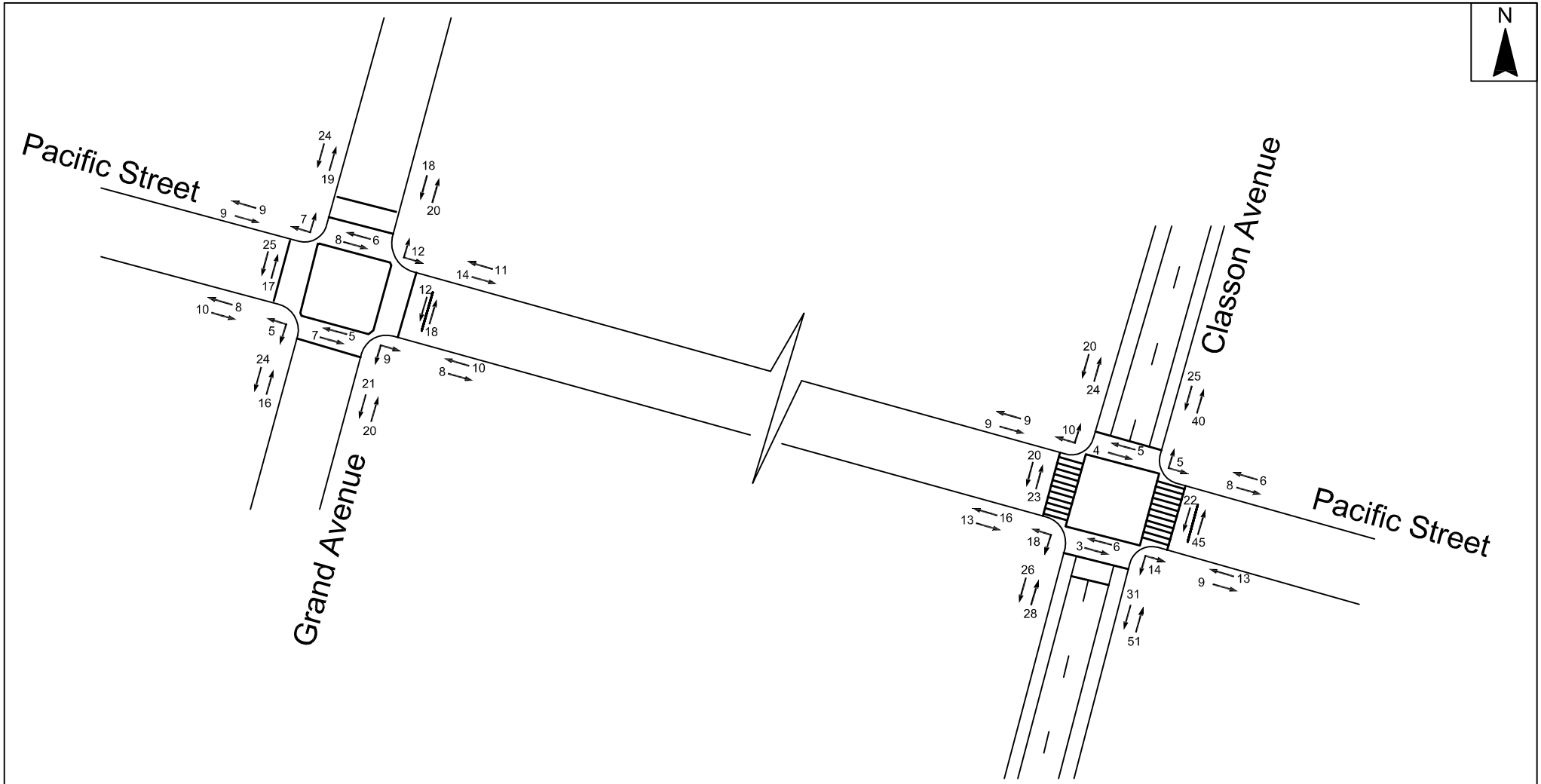

AECOM	1010 Pacific Street Brooklyn, New York	Year 2023 No-Action Pedestrian Volumes Weekday PM Peak Hour Figure 6

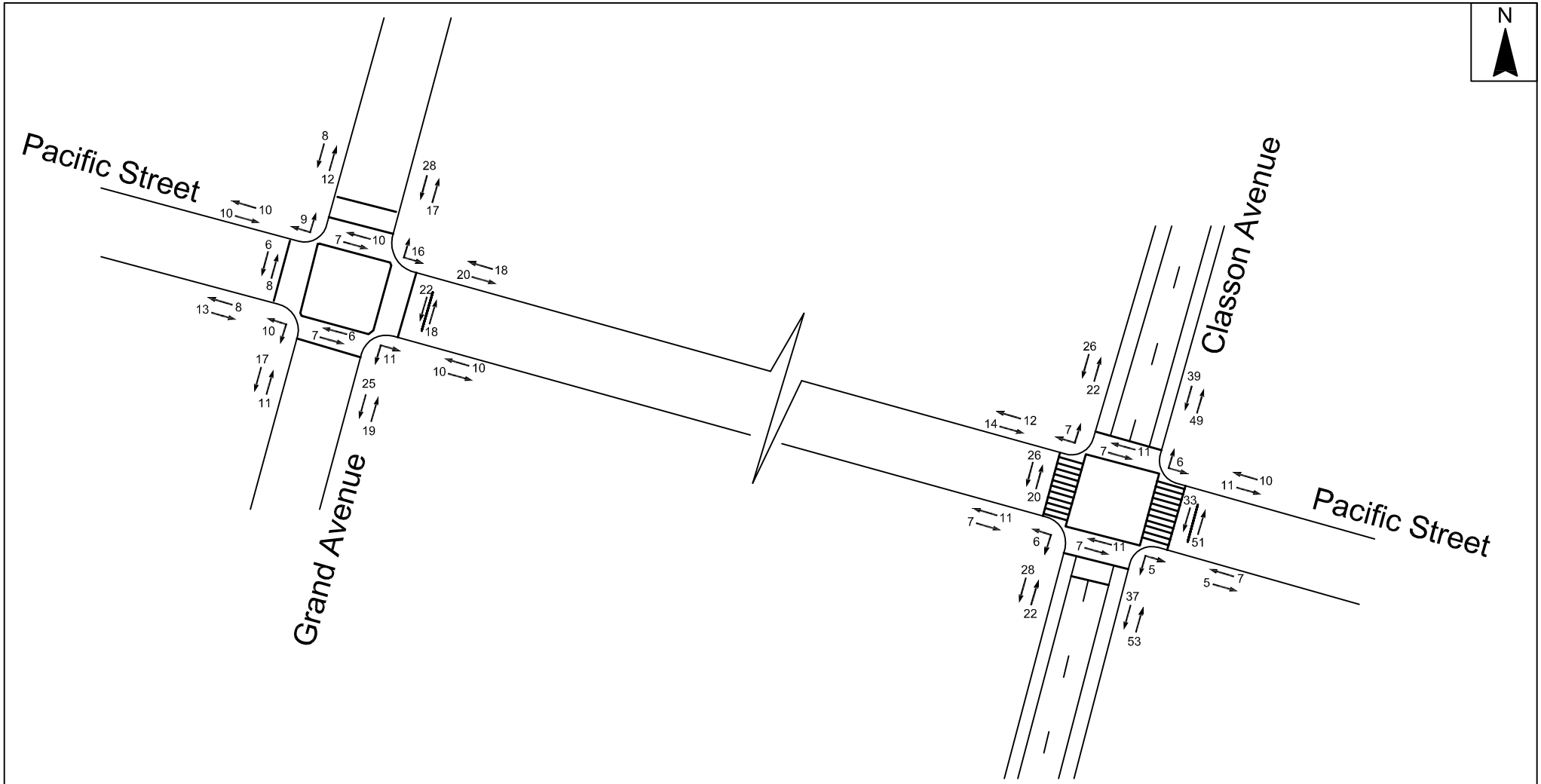

AECOM

1010 Pacific Street
Brooklyn, New York

Year 2023 No-Action Pedestrian Volumes
Saturday Midday Peak Hour
Figure 7

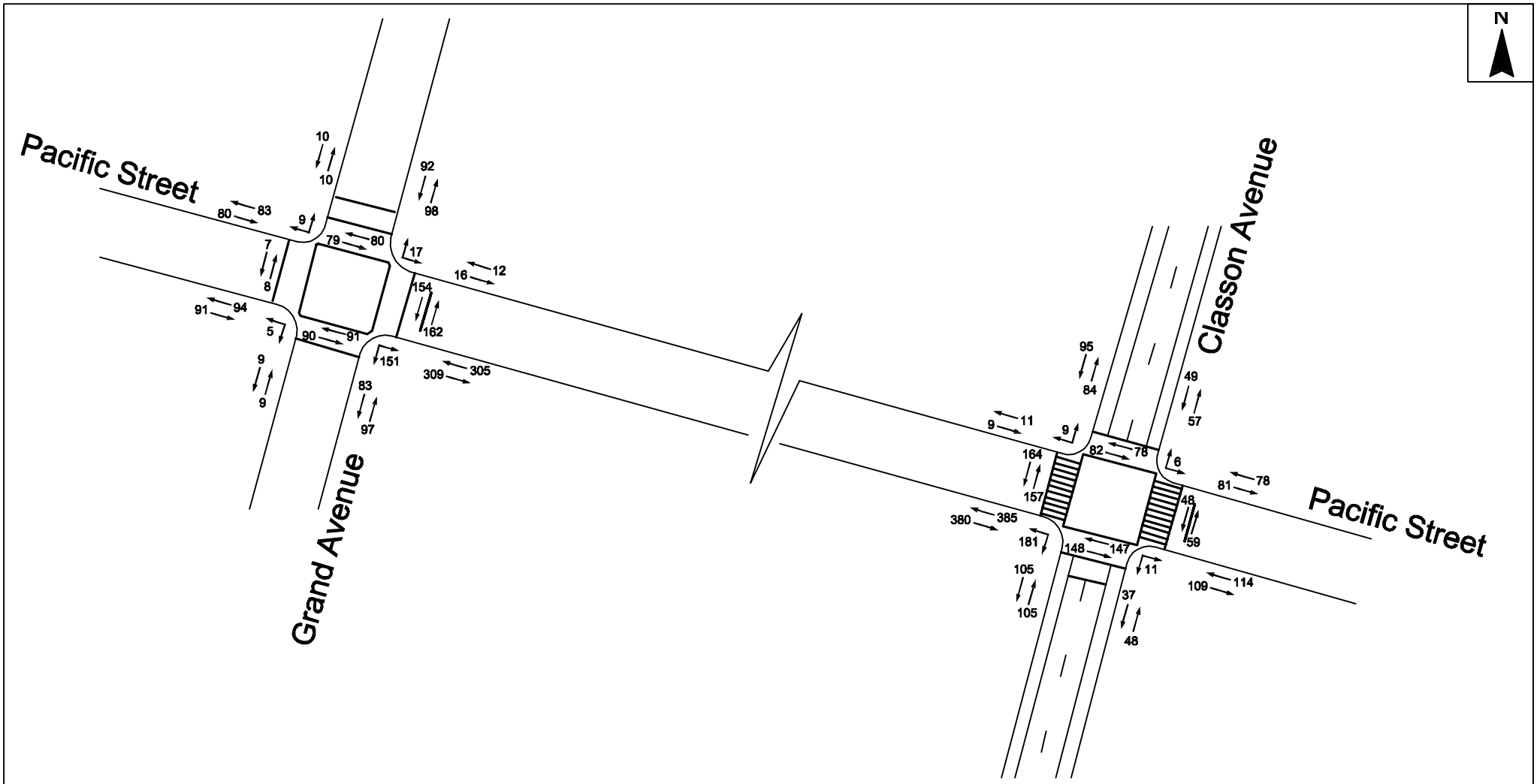

AECOM

1010 Pacific Street
Brooklyn, New York

Year 2023 Action Pedestrian Volumes
Weekday Midday Peak Hour
Figure 8

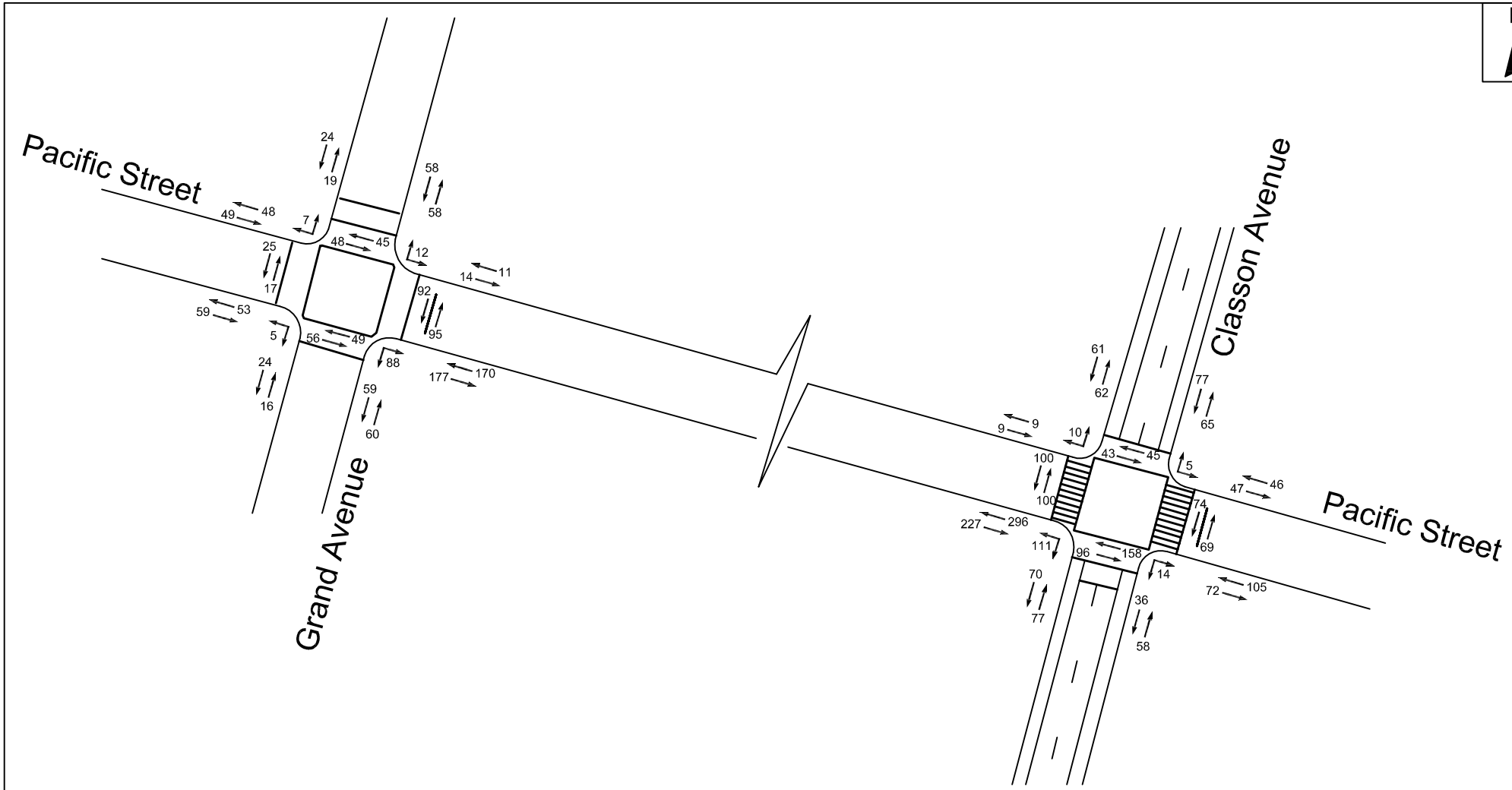

AECOM	1010 Pacific Street Brooklyn, New York	Year 2023 Action Pedestrian Volumes Weekday PM Peak Hour Figure 9

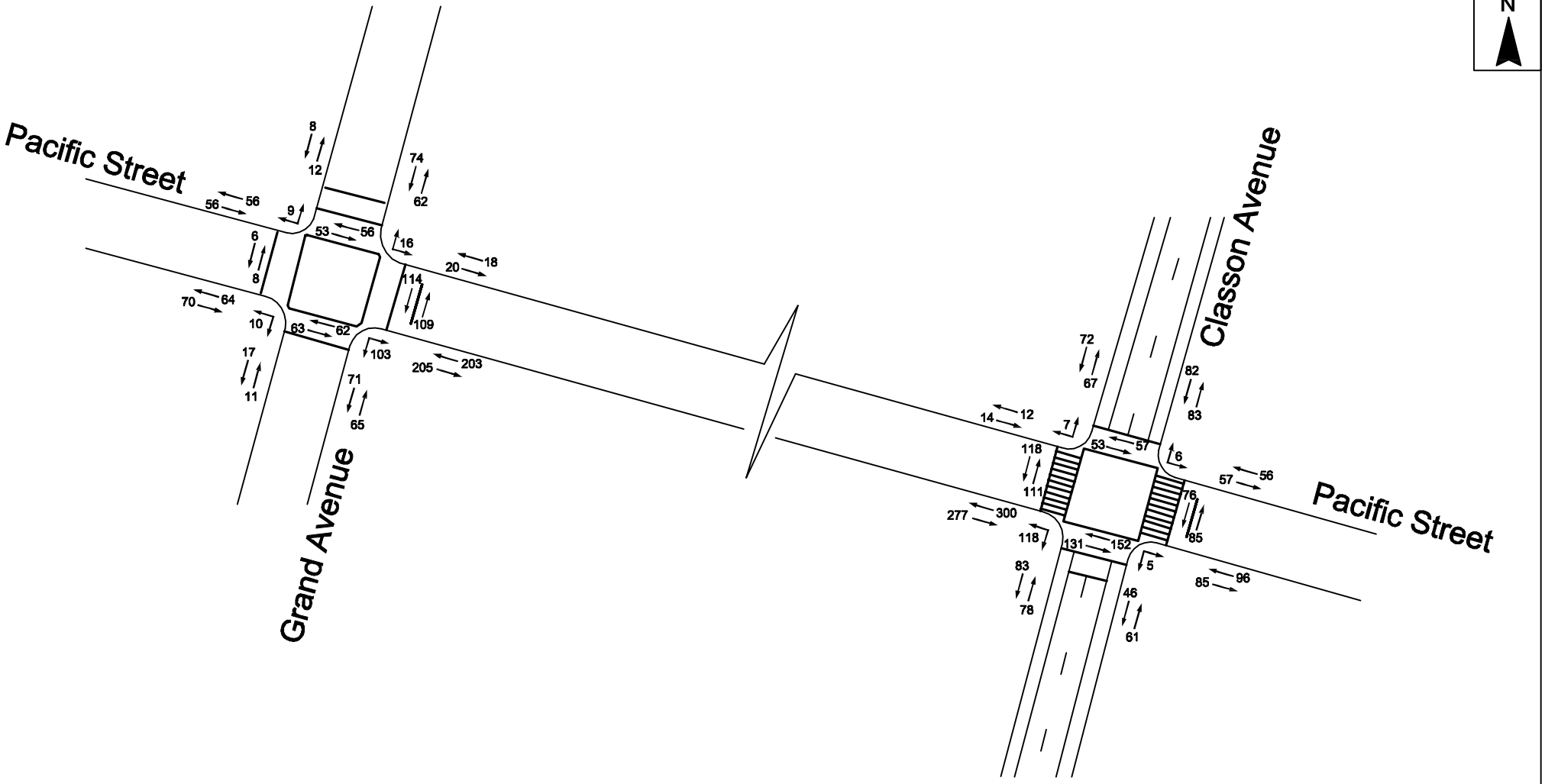

AECOM	1010 Pacific Street Brooklyn, New York	Year 2023 Action Pedestrian Volumes Saturday Midday Peak Hour Figure 10

Appendix D:
Hazardous Materials Studies

1010 Pacific Street
(Block 1133, Lots 32 and 42)
Brooklyn, New York

Phase I Environmental Site Assessment Report

Prepared for:
Integral Consulting Inc.
61 Broadway, Suite 1601
New York, NY 10006-2756

For Submittal to:
Avo Construction
416 Washington Street
New York, NY 10013

EPM Project # 15006

Prepared by:
Environmental Planning & Management, Inc.
1983 Marcus Avenue, Suite 109
Lake Success, New York 11042

ENVIRONMENTAL PLANNING & MANAGEMENT, INC

February 13, 2015

EXECUTIVE SUMMARY

This report presents the findings of a Phase I Environmental Site Assessment (Phase I ESA) prepared by Environmental Planning & Management, Inc. (EPM) for Integral Consulting Inc., on behalf of Avo Construction (collectively referred to as "the User") for the property located at 1010 Pacific Street in Brooklyn, New York (Subject Property). The subject property is identified as Block 1133, Lots 32 and 42 in New York City's tax records. EPM understands that this assessment was requested in connection with a potential purchase and development.

The subject property is currently owned by Lisa Martensson and occupied by Affinity Creations, Inc.

The User has requested this Phase I ESA to help determine present environmental conditions prior to potential purchase and development of the subject property. The Phase I ESA was conducted in general accordance with the scope and limitations of the ASTM International Standard E 1527-13, *Standard Practice for Environmental Site Assessments: Phase I Environmental Site Assessment Process* and the "due diligence" regulations of the Comprehensive Environmental Response, Compensation and Liability Act (CERCLA) and Section 9601 (35)(b) of the Superfund Amendments and Reauthorization Act.

The subject property occupies approximately 25,850 square feet and is developed with one rectangular, two-story warehouse and a vacant lot. The subject property is bounded by and accessible from Pacific Street to the north. At the time of EPM's site visit Affinity Creations, Inc.'s activities consisted of manufacturing commercial display hardware such as cabinets, racks, and stands.

Through performance of this ESA, the following Recognized Environmental Conditions (RECs) were identified:

- During a February 5, 2015 site visit EPM observed a number two fuel oil-burning boiler in the cellar of the subject property, located in the northwestern corner of the onsite warehouse footprint. According to the owner of the subject property, the onsite building has been heated using natural gas prior to its most recent purchase in 1994. The owner of the subject property was unaware of the location of any current or former underground or aboveground number two fuel oil storage tank(s) onsite. EPM observed no indication of tank location during the site visit with the exception of an exterior vent pipe north of the cellar. Fire insurance maps dating from 1951 and 1965 identify a gas tank in the vacant lot to the east of the onsite warehouse, approximately 170 feet east of the cellar boiler.

  In the absence of any available records detailing the closure and/or removal of an onsite tank or tanks, EPM recommends conducting a ground-penetrating radar (GPR) survey to determine the location of any subsurface tanks or associated systems on the subject property. Based on the results of the GPR survey, additional subsurface investigation may be warranted.

- Fire insurance maps dating from 1926 through 2007 indicated that the majority of the subject property was in use for manufacturing, first for the National Biscuit Company and later for

indeterminate manufacturing. A 1906 fire insurance map depicts a chemical storage structure near the subject property's southeastern corner. A 1926 fire insurance map shows the same structure as a chemical works. City directory records indicate that chemical manufacturing occurred onsite in 1928. City directory records also indicate that automotive repair took place on the subject property in 1934 and 1985. Based on their durations and/or location on the subject property, these past uses constitute the potential to adversely impact the subject property.

A subsurface investigation would be recommended in order to determine if impacts to the subject property from these previous onsite uses have occurred.

- Fire insurance maps dating from 1926 through 2007 depicted the north adjacent property as a large automotive repair facility improved with several gas tanks. Fire insurance maps dating from 1951 and 1988 through 2007 depicted automotive repair facilities 100 feet east and 50 feet south of the subject property, respectively. These latter two properties were also identified in EDR's Historical Auto Stations Database. Based on the size, use, duration of use, proximity, and/or location topographically upgradient, these properties constitute the potential to adversely impact the subject property.

  A subsurface investigation would be recommended in order to determine if impacts to the subject property from these previous off-site uses have occurred.

Through performance of this ESA, the following non-REC environmental concerns were identified:

- At the time of EPM's site reconnaissance, the subject property was improved with fluorescent light fixtures. Prior to any renovation or demolition which may impact them, EPM recommends inspecting these fixtures for the presence of polychlorinated biphenyl (PCB)-containing ballasts.

- According to New York City Department of Buildings records reviewed, structures on the subject property were constructed in approximately 1900 (see Section 4.4.7). Based on the time of original construction, asbestos-containing materials and lead-based paint may be present within structures at the subject property. Prior to any renovation or demolition which may impact them, EPM recommends conducting asbestos and lead-based paint inspections to determine the condition, quantity, and location of these materials, and removing them in accordance with federal, state, and local regulations.

TABLE OF CONTENTS

EXECUTIVE SUMMARY 1

1.0 INTRODUCTION 1
1.1 PURPOSE 1
1.2 SCOPE OF SERVICES 2
1.3 SIGNIFICANT ASSUMPTIONS 2
1.4 LIMITATIONS AND EXCEPTIONS 2
1.5 USER RELIANCE 3

2.0 SUBJECT PROPERTY DESCRIPTION 4
2.1 LOCATION AND LEGAL DESCRIPTION 4
2.2 SUBJECT PROPERTY AND VICINITY GENERAL CHARACTERISTICS 4
2.3 CURRENT USE OF THE SUBJECT PROPERTY 4
2.4 DESCRIPTIONS OF STRUCTURES, ROADS, OTHER IMPROVEMENTS ON THE SUBJECT PROPERTY 4
2.5 CURRENT USE OF THE ADJOINING PROPERTIES 5

3.0 USER-PROVIDED INFORMATION 6
3.1 TITLE RECORDS 6
3.2 ENVIRONMENTAL LIENS OR ACTIVITY AND USE LIMITATIONS (AULs) 6
3.3 SPECIALIZED KNOWLEDGE 6
3.4 COMMONLY KNOWN OR REASONABLY ASCERTAINABLE INFORMATION 6
3.5 VALUATION REDUCTION FOR ENVIRONMENTAL ISSUES 6
3.6 OWNER, PROPERTY MANAGER, AND OCCUPANT INFORMATION 6
3.7 REASON FOR PERFORMING PHASE I 6

4.0 RECORDS REVIEW 7
4.1 STANDARD ENVIRONMENTAL RECORD SOURCES 7
4.1.1 NPL Site List / Delisted NPL / Proposed NPL 8
4.1.2 CERCLIS / CERCLIS NFRAP 9
4.1.3 RCRAInfo TSD/CORRACTS 9
4.1.4 RCRAInfo Gen/Trans 9
4.1.5 US ENG CONTROLS 10
4.1.6 US INST CONTROLS 10
4.1.7 FINDS 10
4.1.8 ERNS 10
4.1.9 SHWS 11
4.1.10 SWF/LF 11
4.1.11 LTANKS / HIST LTANKS 11
4.1.12 USTs / HIST USTs 11
4.1.13 ASTs 12
4.1.14 CBS 12
4.1.15 INST Controls / ENG Controls 12
4.1.16 SWRCY 12
4.1.17 MANIFEST 12
4.1.18 VCP 13
4.1.19 Brownfields 13
4.1.20 Spills 13
4.1.21 TRIS 13
4.1.22 Drycleaners 14
4.1.23 NY E Designation 14
4.2 PROPRIETARY DATABASE REVIEWS 14
4.2.1 EDR Manufactured Gas Plants 14

4.2.2 EDR Historical Auto Stations 15
4.2.3 EDR Historical Cleaners 15
4.2.4 RGA HWS 16
4.2.4 RGA LF 16
4.3 TIER-1 VAPOR ENCROACHEMENT SCREENING 16
4.3.1 Potential Off-Site Vapor Sources 17
4.3.2 Potential On-Site Vapor Sources 18
4.4 ADDITIONAL ENVIRONMENTAL RECORD SOURCES 18
4.4.1 New York State Department of Environmental Conservation (NYSDEC) 18
4.4.2 New York City Department of Environmental Protection (NYCDEP) 18
4.4.4 Fire Department of New York City (FDNY) 18
4.4.5 United States Environmental Protection Agency (US EPA) 18
4.4.6 New York City Office of Environmental Remediation (NYCOER) 18
4.4.7 New York City Department of Buildings (NYCDOB) 19
4.5 PHYSICAL SETTING SOURCES 19
4.5.1 Topography 19
4.5.2 Geology and Soil 19
4.5.3 Hydrogeology 20
4.5.4 Surface Water and Wetlands 20
4.5.5 Flood Zone Data 20
4.6 HISTORICAL USE INFORMATION ON THE SITE 20
4.6.1 Aerial Photographs 20
4.6.2 Fire Insurance Maps 21
4.6.3 Recorded Land Title and Lien Records 24
4.6.4 USGS Topographic Maps 24
4.6.5 Local Street Directories 24
4.6.6 Previous Investigation Reports 26
4.7 HISTORICAL USE INFORMATION ON ADJOINING PROPERTIES 26

5.0 SITE RECONNAISSANCE 27
5.1 METHODOLOGY AND LIMITING CONDITIONS 27
5.2 GENERAL SITE SETTING 27
5.3 EXTERIOR OBSERVATIONS 27
5.4 INTERIOR OBSERVATIONS 28

6.0 INTERVIEWS 29
6.1 INTERVIEWS WITH OWNER 29
6.2 INTERVIEWS WITH SITE MANAGER 29
6.3 INTERVIEWS WITH OCCUPANTS 29
6.4 INTERVIEWS WITH LOCAL GOVERNMENT OFFICIALS 29

7.0 FINDINGS 30
7.1 RECOGNIZED ENVIRONMENTAL CONDITIONS 30
7.2 HISTORICAL RECOGNIZED ENVIRONMENTAL CONDITIONS 31
7.3 OTHER ENVIRONMENTAL CONDITIONS 31

8.0 OPINION 32

9.0 CONCLUSIONS 33

10.0 DEVIATIONS 34

11.0 ADDITIONAL SERVICES 35

12.0 REFERENCES 36

13.0 SIGNATURES OF ENVIRONMENTAL PROFESSIONALS 37

14.0 QUALIFICATIONS OF ENVIRONMENTAL PROFESSIONALS 38

FIGURES

Figure 1 Site Location Map
Figure 2 Detailed Site Plan

APPENDICES

Appendix A Site Photographs
Appendix B Qualifications of Environmental Professionals
Appendix C Regulatory Database Report
Appendix D Historical Aerial Photographs
Appendix E Fire Insurance Maps
Appendix F Historical Topographic Maps
Appendix G City Directory Report
Appendix H Correspondence

LIST OF ABBREVIATIONS AND ACRONYMS

ACM	Asbestos-Containing Material
AST	Aboveground Storage Tank
ASTM	ASTM International
AUL	Activity and Use Limitation
CERCLA	Comprehensive Environmental Response, Compensation and Liability Act
CERCLIS	Comprehensive Environmental Response, Compensation and Liability Information System
CORRACTS	Corrective Action Reports
CREC	Controlled Recognized Environmental Condition
EDR	Environmental Data Resources, Inc.
EPA	United States Environmental Protection Agency
ERNS	Emergency Response Notification System
ESA	Environmental Site Assessment
FDNY	Fire Department of New York City
FEMA	Federal Emergency Management Agency
HREC	Historical Recognized Environmental Condition
HRS	Hazard Ranking System
HWS	Hazardous Waste Site
LBP	Lead-Based Paint
LUST	Leaking Underground Storage Tank
NPL	National Priority List
NFRAP	CERCLIS No Further Remedial Action Planned
NYCDEP	New York City Department of Environmental Protection
NYSDEC	New York State Department of Environmental Conservation
NYCOER	New York City Office of Environmental Remdiation
PCB	Polychlorinated biphenyl
pCi/L	picocuries per liter
RCRA	Resource Conservation and Recovery Act
RCRAInfo	Resource Conservation and Recovery Act Information Database
REC	Recognized Environmental Condition
SHWS	State Hazardous Waste Site
SQG	Small Quantity Generator
SRS	Soil Remediation Standard
SWF/LF	Solid Waste Facilities/Landfill Sites
TCLP	Toxicity Characteristic Leaching Procedure
TSDF	Treatment, Storage and Disposal Facility
USGS	United States Geological Survey
UST	Underground Storage Tank
VEC	Vapor Encroachment Concern
VCP	State Voluntary Cleanup Agreement Sites

1.0 INTRODUCTION

This report presents the findings of a Phase I Environmental Site Assessment (Phase I ESA) prepared by Environmental Planning & Management, Inc. (EPM) for Integral Consulting Inc., on behalf of Avo Construction (collectively referred to as "the User") for the property located at 1010 Pacific Street in Brooklyn, New York (subject property). The subject property is identified as Block 1133, Lots 32 and 42 in New York City's tax records. EPM understands that this assessment was requested in connection with a potential purchase and development.

The subject property is currently owned by Ms. Lisa Martennson and occupied by Affinity Creations.

1.1 PURPOSE

The purpose of the Phase I ESA was to identify the presence of any Recognized Environmental Conditions[1] (RECs), Historical Recognized Environmental Conditions (HRECs)[2], and/or Controlled Recognized Environmental Conditions (CRECs)[3] as defined by ASTM International (ASTM) Standard Practice E1527-13, *Standard Practice for Environmental Site Assessments: Phase I Environmental Site Assessment Process,* with respect to the subject property. This report has been prepared for and at the request of Integral Consulting Inc., on behalf of Avo Construction, also collectively designated by the term "User," within the context of ASTM Standard Practice E1527-13.

The general application of ASTM Standard Practice E1527-13 in the preparation of this report is intended to permit the designated User of this report to satisfy one of the requirements to qualify for the innocent landowner, contiguous property owner, or bona fide prospective purchaser (collectively, "landowner liability protections") limitations on liability with respect to the Comprehensive Environmental Response, Compensation and Liability Act ("CERCLA"). This report, therefore, intends to represent "all appropriate inquiry" into the previous ownership and uses of the subject property, consistent with good commercial or customary practice, as defined by CERCLA in 42 U.S.C. §9601(35)(B).

1 ASTM Standard E1527-13 defines "Recognized Environmental Conditions" as follows: "the presence or likely presence of any hazardous substances or petroleum products in, on, or at a property: (1) due to release to the environment; (2) under conditions indicative of a release to the environment; or (3) under conditions that pose a material threat of a future release to the environment." *De minimis* conditions are not recognized environmental conditions. The term is not intended to include *de minimis* conditions that generally do not present a threat to human health or the environment and that generally would not be the subject of an enforcement action if brought to the attention of appropriate governmental agencies."

2 ASTM Standard E1527-13 defines "Historical Recognized Environmental Condition" as follows: "a past release of any hazardous substances or petroleum products that has occurred in connection with the property and has been addressed to the satisfaction of the applicable regulatory authority or meeting unrestricted use criteria established by a regulatory authority, without subjecting the property to any required controls (for example, property use restrictions, activity and use limitations, institutional controls, or engineering controls)."

3 ASTM Standard E1527-13 defines "Controlled Recognized Environmental Conditions" as follows: a recognized environmental condition resulting from a past release of hazardous substances or petroleum products that has been addressed to the satisfaction of the applicable regulatory authority (for example, as evidenced by the issuance of a no further action letter or equivalent, or meeting risk-based criteria established by regulatory authority), with hazardous substances or petroleum products allowed to remain in place subject to the implementation of required controls (for example, property use restrictions, activity and use limitations, institutional controls, or engineering controls).

1.2 SCOPE OF SERVICES

EPM's scope of services for this Phase I ESA consisted of the following components, as further detailed in subsequent sections of this report:

- Records review;
- Site visit and reconnaissance;
- Interviews with present and past owner, operators, and occupants of the property;
- Interviews with local government officials;
- Perform a Tier-1 Vapor Encroachment Screen of the subject property; and
- Evaluation of information and preparation of a Phase I ESA report.

The User's responsibilities, as set forth in the ASTM Standard Practice E1527-13 with respect to the identification of RECs in connection with the subject property, comprise an additional scope of inquiry. These responsibilities consist of the following tasks and information sources, as further discussed in Section 3 of this Phase I ESA report:

- Review of Title and Judicial Records for Environmental Liens or Activity and Use Limitations ("AULs");
- Specialized Knowledge or Experience of the User;
- Actual Knowledge of the User;
- Reason for Significantly Lower Purchase Price;
- Commonly Known or Reasonably Ascertainable Information; and
- Reason for Requesting a Phase I ESA.

1.3 SIGNIFICANT ASSUMPTIONS

In general, EPM has assumed in the conduct of this ESA that respondents to inquiries offered information in good faith and that, through EPM's research, reasonably correct and accurate information from the sources consulted was obtained.

1.4 LIMITATIONS AND EXCEPTIONS

This investigation was limited to the review of available records, interviews with local officials and persons familiar with the subject property, and an on-site visual inspection. The site inspection was limited to observation of surficial conditions only. Such an inspection cannot be expected to reveal all petroleum or hazardous materials or situations that might be present on-site; some hazardous materials or conditions may exist and not be detected because they are beyond the scope of this study. The investigation was conducted in a manner consistent with the level of care and skill exercised by environmental professionals currently practicing under similar conditions and was based on information made available to the representatives of EPM. All documents prepared by or furnished by EPM pursuant to this project are to be used in the context of the scope of services contracted. This document is not intended or represented to be suitable for reuse by the client or others on modifications of the project

scope. Reuse or release to third parties without the expressed written permission of the consultant is prohibited.

1.5 USER RELIANCE

This Phase I ESA was conducted in a manner consistent with the level of care and skill exercised by environmental professionals currently practicing under similar conditions and was based on information made available to EPM representatives. EPM conducted interviews and reviewed files and data to obtain information that could reveal the past or present use, storage, and/or disposal of hazardous substances or petroleum products on or near the subject property. EPM performed a visual reconnaissance of the subject property to identify evidence of potential sources of contamination.

The Phase I ESA conforms to the general content requirements of ASTM Standard E-1527, to address the due diligence provisions of CERCLA. This report was prepared in general accordance with Section 9601 (35)(b) of the Superfund Amendments and Reauthorization Act, to satisfy the provision that "all appropriate inquiry" be made into the presence or potential presence of hazardous substances or petroleum products on the subject property.

Additional information not available at the time of this report's preparation may result in the modification of the information present herein. The scope of work for this Phase I ESA did not include evaluation of potential asbestos-containing materials, radon gas, or lead-based paint.

2.0 SUBJECT PROPERTY DESCRIPTION

This section provides general information on the ownership and location of the subject property, and current uses of the subject property and surrounding properties. The subject property occupies approximately 25,850 square feet and is developed with one rectangular, two-story warehouse and a vacant lot. The subject property is bounded by and accessible from Pacific Street to the north. Select photographs of the subject property are included as Appendix A.

2.1 LOCATION AND LEGAL DESCRIPTION

The subject property is identified as Block 1133, Lots 32 and 42 and is located at 1010 Pacific Street, Brooklyn County, New York. The subject property is bounded to the north by Pacific Street. The subject property is also identified on the New York City Department of Building website (http://www.nyc.gov/html/dob/) as 998 through 1018 Pacific Street. The subject property is currently owned by Lisa Martensson.

2.2 SUBJECT PROPERTY AND VICINITY GENERAL CHARACTERISTICS

The subject property currently consists of one warehouse and a vacant lot, occupied by Affinity Creations and accessible from Pacific Street. The various areas of the subject property were in use for their intended functions during the site reconnaissance.

The surrounding neighborhood uses are predominately residential, commercial, and automotive.

2.3 CURRENT USE OF THE SUBJECT PROPERTY

The subject property currently consists of a warehouse and an open lot in use by a manufacturer of commercial display hardware, accessible from Pacific Street. The property was in use by Affinity Creations for its intended functions during the subject property reconnaissance.

2.4 DESCRIPTIONS OF STRUCTURES, ROADS, OTHER IMPROVEMENTS ON THE SUBJECT PROPERTY

1010 Pacific Street is developed with one warehouse comprising approximately 18,375 square feet of floor space and an adjacent vacant lot occupying the remainder of the property. The warehouse on the subject property is in use as a manufacturer of commercial display hardware and the vacant lot is in use for storage and parking. The warehouse was accessible and in use at the time of the February 2015 reconnaissance. Onsite structures and features appeared in moderate to good condition during the site reconnaissance.

2.5 CURRENT USE OF THE ADJOINING PROPERTIES

Surrounding property uses are predominantly residential, commercial, and automotive. The uses of the adjoining properties are as follows:

North: (from west to east) Residential structures, former automotive repair and sales facility, construction site (planned to be a commercial structure);

East: Residential structures;

South: (from east to west) Brooklyn Dialysis Center, parking, construction site (planned to be a commercial structure); and

West: Vacant lot occupied with numerous derelict trucks and trailers.

3.0 USER-PROVIDED INFORMATION

The "User" of this assessment, in accordance with ASTM Standard Practice E1527-13, is Integral Consulting Inc., on behalf of Avo Construction. As part of the Phase I ESA process, Mr. Jason Blauvelt of Avo Construction provided answers to the following questions.

3.1 TITLE RECORDS

As of the date of this assessment, a title search had been commissioned by the User and is in production. Title documentation will be reviewed as it becomes available.

3.2 ENVIRONMENTAL LIENS OR ACTIVITY AND USE LIMITATIONS (AULs)

As of the date of this assessment, a title search had been commissioned by the User and is in production. Title documentation will be reviewed for the presence of any liens or AULs against the property as it becomes available. In addition, the User is unaware of any liens or AULs against the property.

3.3 SPECIALIZED KNOWLEDGE

The User does not have any specialized knowledge regarding the subject property.

3.4 COMMONLY KNOWN OR REASONABLY ASCERTAINABLE INFORMATION

To the best of the User's knowledge, the subject property has previously been used for some sort of manufacturing before its current use. The User possessed no knowledge of obvious indicators pointing to the presence or likely presence of releases at the subject property.

3.5 VALUATION REDUCTION FOR ENVIRONMENTAL ISSUES

The User indicated that the assessment was performed in association with a potential property purchase and development, and that the proposed price reasonably reflected the fair market value of such a property unencumbered by any contamination.

3.6 OWNER, PROPERTY MANAGER, AND OCCUPANT INFORMATION

Information provided by the subject property owner, property manager, and/or occupant are provided in Section 6 and where otherwise stated.

3.7 REASON FOR PERFORMING PHASE I

The assessment was requested in association with a potential property purchase and development.

4.0 RECORDS REVIEW

Federal, State, and local record sources were reviewed to identify potential sites of environmental concern located within established search distances of up to 1.0 mile from the subject property. The review of the standard environmental record sources was accomplished utilizing a computer database search report provided by Environmental Data Resources, Inc. (EDR) of Shelton, Connecticut. A copy of the EDR database report (EDR, 2014a) is included as Appendix C. A description of the various databases reviewed and the summaries of the reviews are provided below.

4.1 STANDARD ENVIRONMENTAL RECORD SOURCES

The databases discussed in this section were reviewed for information regarding documented and/or suspected releases of regulated hazardous substances and/or petroleum products on or near the subject property. EPM also reviewed the four "unmappable" (also referred to as "orphan") listings within the database report, cross-referencing available address information with facility names. A summary of the sites identified through the Federal and State regulatory agency databases review is presented in the following table. No orphan sites were found to be located within the applicable search radii and are therefore not included in the table. Additionally, EPM conducted a review of NYSDEC online records to evaluate whether there had been any changes to the status of open cases since the generation of the databases provided by EDR.

Federal and State List	Subject Property Appears on List	Search Radius*	No. of Sites within Search Radius	Last Updated
National Priorities List for Federal Superfund Cleanup (NPL) / Delisted NPL / Proposed NPL	No	1.0 mile	0 / 0 / 0	09/29/2014
Comprehensive Environmental Response, Compensation, and Liability Information System (CERCLIS) /CERCLIS No Further Remedial Action Planned (NFRAP)	No	0.5 mile	0 / 0	10/25/2013
Resource Conservation and Recovery Information System – Treatment, Storage, or Disposal Facilities (RCRAInfo-TSD) / RCRIS Corrective Action Activity (CORRACTS)	No	0.5 mile / 1.0 mile	0 / 0	12/09/2014
Resource Conservation and Recovery Information System Generators/Transporters (RCRAInfo Gen/Trans) / Non-Generators (Non-Gen)	No	0.25 mile	15 / 67	12/09/2014
US Engineering Controls (US ENG CONTROLS)	No	0.5 mile	0	09/18/2014
US Institutional Controls (US INST CONTROL)	No	0.5 mile	0	09/18/2014

Federal and State List	Subject Property Appears on List	Search Radius*	No. of Sites within Search Radius	Last Updated
Facility Index System/Facility Identification Initiative Program Summary Report (FINDS)	Yes	Site	NA	08/16/2014
Emergency Response Notification System (ERNS)	No	Site	NA	09/29/2014
State Hazardous Waste Sites (SHWS)	No	1.0 mile	0	11/18/2014
Solid Waste Facilities/Landfill Sites (SWF/LF)	No	0.5 mile	4	01/06/2015
Leaking Storage Tank Incident Reports (LTANKS) / Historical LTANKS	No	0.5 mile	38 / 0	11/18/2014
Underground Storage Tanks (USTs) / Historical USTs (HIST USTs)	No	0.25 mile	17 / 6	12/29/2014 / 01/01/2002
Aboveground Storage Tanks (AST)	No	0.25 mile	28	12/29/2014
Chemical Bulk Storage (CBS)	No	0.25 mile	0	12/29/2014
State Engineering Controls (ENG CONTROLS) / State Institutional Controls (INST CONTROL)	No	0.5 mile	0 / 0	11/18/2014
Approved Class B Recycling Facilities (SWRCY)	No	0.5 mile	0	01/06/2015
MANIFEST	Yes	0.25 mile	113	11/01/2014
Voluntary Cleanup Program (VCP)	No	0.5 mile	0	11/18/2014
Brownfields	No	0.5 mile	0	11/18/2014
NY Spills	No	0.125 mile	24	11/18/2014
Toxic Release Inventory System (TRIS)	No	Site	NA	12/31/2011
Drycleaners	No	0.25 mile	2	01/12/2015
New York E-Designation	No	0.125 mile	7	12/03/2014

* The surrounding area search radius indicates the radial area (measured from the subject property) for which the database review was performed.

The following subsections provide a discussion of the databases reviewed, as well as sites identified within the search radius and listed in the above table.

4.1.1 NPL Site List / Delisted NPL / Proposed NPL

The U.S. EPA National Priorities Listing (NPL), or Superfund List, is a Federal listing of uncontrolled or abandoned hazardous waste sites. The list is created from the CERCLIS database (see next subsection) and is primarily based upon a score that each site or facility receives from the U.S. EPA's Hazard Ranking System. After a site or facility has been identified as a CERCLIS site, the U.S. EPA conducts an assessment of the property. The ranking score associated with the degree of contamination found is one

of the determinations made as to whether the site is placed on the NPL. These sites are then prioritized for possible long-term remedial action and referred to the state for further action under state programs. Delisted sites are those sites that have been deleted from the NPL when no further response is appropriate. Neither the subject property nor any other facilities within a 1-mile radius are listed in the NPL, Delisted NPL or Proposed NPL databases.

4.1.2 CERCLIS / CERCLIS NFRAP

The Comprehensive Environmental Response, Compensation and Liability Information System (CERCLIS) list is a compilation of records from a nationwide database created to maintain and regulate those facilities or sites that the U.S. EPA has investigated or will investigate for suspected or uncontrolled releases of hazardous substances, contaminants or pollutants as reported by states, municipalities, private companies and private citizens under the Comprehensive Environmental Response, Compensation and Liability Act (CERCLA or the Superfund Program). Once a site is placed on the CERCLIS list, it may be subjected to several additional levels of evaluation to determine the severity of the contamination. These levels of evaluation range from discovery and preliminary assessment to site inspection, and possibly to the Hazard Ranking System. Such a determination could ultimately place the site under consideration for inclusion on the NPL. Inclusion on the CERCLIS list does not confirm the presence of an environmental problem or a public health threat. Former CERCLIS sites that have been granted the status of No Further Remedial Action Planned (NFRAP) are also included in this database. Neither the subject property nor any facilities within a 0.5-mile radius are listed in the CERCLIS or the CERCLIS NFRAP databases.

4.1.3 RCRAInfo TSD/CORRACTS

The Resource Conservation and Recovery Act (RCRA) program identifies and tracks hazardous wastes from the point of generation to the point of disposal. The Resource Conservation and Recovery Information System (RCRAInfo) database tracks those facilities that treat, store and/or dispose of hazardous materials as defined by RCRA (referred to as TSD facilities). The RCRAInfo Corrective Action Activity (CORRACTS) database identifies TSD facilities that have conducted, or are currently conducting, corrective action(s) as regulated under RCRA. Neither the subject property nor any facility within a 0.5-mile radius of the subject property is listed in the RCRIS-TSD database. Neither the subject property nor any facility within a 1-mile radius was listed in the CORRACTS database.

4.1.4 RCRAInfo Gen/Trans

RCRAInfo is the EPA's comprehensive information system, providing access to data supporting RCRA (the Resource Conservation and Recovery Act of 1976) and the Hazardous and Solid Waste Amendments of 1984. Inclusion on the list is not necessarily indicative of contamination; rather, it indicates the presence of potential sources of contamination. The database includes selective information on sites which generate, transport, store, treat and/or dispose of hazardous waste as defined by RCRA. Conditionally exempt small quantity generators (CESQG) generate less than 100 kilograms (kg) of hazardous waste, or less than 1 kg of acutely hazardous waste per month. Small quantity generators (SQGs) generate between 100 kg and 1,000 kg of hazardous waste per month. Large quantity generators

(LQGs) generate over 1,000 kg of hazardous waste, or over 1 kg of acutely hazardous waste per month. Non-Generators (Non-Gen) do not presently generate hazardous waste.

The subject property was not identified in this database. Eight RCRA-LQG, three RCRA-SQG, four RCRA-CESQG, and 67 RCRA-NonGen sites facilities were found within a 0.25-mile radius of the subject property.

Based on assumed hydraulic gradient, distance, and/or the absence of reported releases or violations, it is unlikely that these facilities would have an adverse environmental impact on the subject property and are therefore not considered RECs.

4.1.5 US ENG CONTROLS

The US Engineering Controls (US ENG Controls) database includes various forms of caps, building foundations, liners, and treatment methods to eliminate pathways for regulated substances to enter environmental media or affect human health. Neither the subject property nor any other facilities within a 0.5-mile radius of the subject property appeared on the US ENG Controls database.

4.1.6 US INST CONTROLS

US Institutional Controls (US INST Controls) database includes administrative measures, such as groundwater use restrictions, construction restrictions, property use restrictions, and post remediation care requirements intended to prevent exposure to contaminants remaining on-site. Neither the subject property nor any other facilities within a 0.5-mile radius of the subject property appeared on the US INST Controls database.

4.1.7 FINDS

The Facility Index System/Facility Identification Initiative Program Summary Report (FINDS) contains facility information from several databases including the Federal Permit Compliance System Wastewater Discharges database, the U.S. EPA Civil Enforcement Docket, and the New York State Air Discharge database. The subject property was identified in the FINDS database as Affinity Creations, Inc. According to records reviewed, the facility was of interest to the Occupational Safety and Health Administration (OSHA). No other information was provided in regards to this listing, and is therefore not considered to be evidence of a REC.

4.1.8 ERNS

The Emergency Response Notification System (ERNS) is a national database used to collect information on reported releases of oil and hazardous substances. The subject property was not listed in the ERNS database.

4.1.9 SHWS

The New York State Inactive Hazardous Waste Sites (SHWS) database, compiled by the New York State Department of Environmental Conservation (NYSDEC), maintains information regarding the investigation and cleanup of suspected hazardous waste sites. Neither the subject property nor any facilities within a 1-mile radius of the subject property were identified in the SHWS database.

4.1.10 SWF/LF

The Solid Waste Facility/Landfill Facilities (SWF/LF) database is a comprehensive listing of State permitted/recorded solid waste disposal facilities or landfills. The subject property was not identified in the SWF/LF database; however, four other facilities within 0.5 miles was identified.

Based on assumed hydraulic gradient, distance, and/or the absence of reported releases or violations, it is unlikely that these facilities would have an adverse environmental impact on the subject property and therefore are not considered RECs.

4.1.11 LTANKS / HIST LTANKS

The Leaking Underground Storage Tank (LTANKS) List identifies incidences of reported leaking storage tanks, both underground storage tanks (USTs) and aboveground storage tanks (ASTs). Reports are dated from 4/1/1986 through to the most recent update. Leaking can be attributed to tank test failures, tank failures or tank overfills. The HIST LTANKS is a listing of historical LTANKS sites that was last updated in 2002. The subject property was not listed in the LTANKS database; however, 38 cases at off-site facilities within a 0.5-mile radius of the subject property were identified in the database. Neither the subject property nor any other facilities within a 0.5-mile radius were identified in the HIST LTANKS database. All but 2 of the 38 LTANKS incidents have been closed by NYSDEC and are therefore not expected to impact the subject property. Based on distance, assumed hydraulic gradient, and nature of releases, it is unlikely that the remaining facilities would have an adverse impact on the subject property.

4.1.12 USTs / HIST USTs

The UST database contains registered USTs that are regulated under Subtitle I of the RCRA. The Historical Underground Storage Tank (HIST UST) database contains registered USTs that are regulated under Subtitle I of the RCRA but is no longer updated and was last updated in 2002. The subject property was not identified on either the UST or HIST UST databases; however, 17 UST facilities and 6 HIST UST facilities were listed within a 0.25-mile radius of the subject property. Based on assumed hydraulic gradient, case status and/or the absence of reported violations or release, none of the off-site UST and HIST UST listings are expected to have an adverse impact on the subject property.

4.1.13 ASTs

The Aboveground Storage Tank (AST) database contains registered ASTs. The subject property was not identified on the AST database; however, 28 other facilities within a 0.25-mile radius are listed. Based on the assumed hydraulic gradient, case status, distance from the subject property, and/or the absence of reported releases or violations, none of the off-site AST listings are expected to have an adverse impact on the subject property.

4.1.14 CBS

The Chemical Bulk Storage (CBS) database is maintained by the NYSDEC and records and inventory of facilities that store regulated hazardous substances in USTs of any size. Neither the subject property nor facilities within a 0.25-mile radius were listed on the CBS database.

4.1.15 INST Controls / ENG Controls

This is a listing of sites where State-issued engineering and/or institutional controls remain in place as part of a remedial action to address soil and/or groundwater contamination. These restrictions ensure protection of human health and the environment as long as they are maintained. Neither the subject property nor any other facilities within a 0.5-mile radius appeared in the ENG Controls or INST Controls databases.

4.1.16 SWRCY

The NYSDEC maintains a list of facilities which are approved Class B Recycling Facilities (SWRCY). Neither the subject property nor any other facilities within a 0.5-mile radius of the subject property are listed in the SWRCY database.

4.1.17 MANIFEST

Manifest is a document that lists and tracks hazardous waste from the generator through transporters to a TSD facility. The subject property and 113 facilities within a 0.25-mile radius of the subject property were identified in the Manifest database.

According to Manifest records, 8.3 pounds of a material with a specific gravity of 1 (i.e. possessing a density equal to water) were transported via tanker truck from the subject property's address on December 6, 2013 and opposite the property's address on December 5, 2013. The responsible party was listed as Con Edison. Con Edison entries in environmental regulatory databases associated with sidewalk vaults, street vaults, or manholes are often given street addresses as a means of approximately locating these features not that the features are situated within the properties. Based on this information and the absence of any reported releases or violations, these listings are not considered RECs with respect to the subject property.

Based on distance, assumed hydraulic gradient, and/or the absence of reported releases or violations, the off-site Manifest listings are not considered RECs with respect to the subject property.

4.1.18 VCP

New York established its Voluntary Cleanup Program (VCP) to address the environmental, legal and financial barriers that often hinder the redevelopment and reuse of contaminated properties. The VCP was developed to enhance private sector cleanup of brownfields by enabling parties to remediate sites using private rather than public funds and to reduce the development pressures on "greenfield" sites. Neither the subject property nor any other facility within a 0.5-mile radius was listed in the VCP database.

4.1.19 Brownfields

A Brownfield is any real property where redevelopment or reuse may be complicated by the presence or potential presence of a hazardous waste, petroleum, pollutant, or contaminant. Neither the subject property nor any facilities within a 0.5-mile radius were listed on the Brownfields database.

4.1.20 Spills

Data collected on spills of oil or hazardous material, in New York, is reported to and collected by NYSDEC. NYSDEC provides a database on all reported spills where the potential for environmental degradation may or may not exist. The subject property was not listed in the NY Spills list; however, 27 listings associated with 24 sites within 0.125 mile of the subject property are identified in the database. According to the database report, all of these off-site listings are currently closed, indicating that they have been resolved to the satisfaction of the NYSDEC.

Located approximately 50 feet east from the subject property, 1024 Pacific Street was identified in the Spills database as Spill Number 0104337. The spill, which occurred on July 23, 2001, occurred when approximately one-half pint of unknown, non-polychlorinated biphenyl (PCB)-containing fluid was discovered in a Con Edison service box on 4.5 gallons of standing water. The water and fluid were removed and the service box was washed twice. The spill incident was subsequently closed on 8/24/2001. No sumps were present within the structure. Based on the magnitude of the release and low likelihood of impact to the subsurface, this release is not thought to pose a significant threat of adversely impacting the subject property.

Based on case status, nature of release, and/or assumed hydraulic gradient, it is unlikely that the remaining off-site listings will have an adverse impact on the subject property.

4.1.21 TRIS

The State Toxic Release Inventory System (TRIS) identifies facilities that release toxic chemicals to the air, water and land in reportable quantities. The subject property was not listed in the TRIS database.

4.1.22 Drycleaners

EDR provides a listing of all registered drycleaners within a 0.25-mile radius of the subject property. The subject property was not identified on the database; however, 2 facilities within a 0.25-mile radius of the subject property were identified on the database. Based on distance, assumed hydraulic gradient, and/or the absence of reported releases or violations, it is unlikely that these off-site listings will have an adverse impact on the subject property.

4.1.23 NY E Designation

EDR provides a listing of lots assigned E-Designations within a 0.125-mile radius of the subject property. The subject property was not identified in the E Designation database; however, seven facilities within a 0.125-mile radius of the subject property were identified in the E Designation database. Based on distance and/or assumed topographic gradient, it is unlikely that these off-site listings will have an adverse impact on the subject property.

4.2 PROPRIETARY DATABASE REVIEWS

EDR maintains databases that contain sites of potential environmental concern that are not necessarily included in standard government records. A summary of the sites identified through the EDR proprietary databases review is presented in the following table:

EDR Proprietary Record Source	Subject Property Appears on List	Search Radius*	No. of Sites within Search Radius	Last Updated
EDR Manufactured Gas Plants	No	1.0 mile	0	N/A
EDR Historical Auto Stations	No	0.25 mile	63	N/A
EDR Historical Cleaners	No	0.25 mile	10	NA
NY Recovered Government Archive State Hazardous Waste Sites (RGA HWS)	No	Site	NA	NA
NY Recovered Government Archive Solid Waste Facilities (RGA LF)	No	Site	NA	NA

*The surrounding area search radius indicates the radial area (measured from the subject property) for which the database review was performed.

The following subsections provide a discussion of the databases reviewed, as well as sites identified within the search radius and listed in the above table.

4.2.1 EDR Manufactured Gas Plants

The Manufactured Gas Plant Database, a proprietary EDR database, includes records of coal gas plants. Manufactured gas sites were used in the United States from the 1800's to 1950's to produce a gas that could be distributed and used as fuel. These plants used whale oil, rosin, coal, or a mixture of coal, oil, and water that also produced a significant amount of waste. Many of the byproducts of the gas

production are potentially hazardous to human health and the environment. The byproduct from this process was frequently disposed directly at the plant site and can remain or spread slowly, serving as a continuous source of soil and groundwater contamination. Neither the subject property nor any sites within a 1.0-mile radius were identified on the database.

4.2.2 EDR Historical Auto Stations

The EDR Historical Auto Stations Database includes selected national collections of business directories and listings of potential gas station/filling station/service station sites that were available to EDR researchers. EDR's review was limited to those categories of sources that might, in EDR's opinion, include gas station/filling station/service station establishments. The categories reviewed included, but were not limited to gas, gas station, gasoline station, filling station, auto, automobile repair, auto service station, and service station. Although the subject property was not identified, 63 facilities within a 0.25-mile radius were identified.

The following sites are thought to pose a risk of adversely impacting the subject property based on type of use, duration of use, and location relative to the subject property:

- Located approximately 50 feet east of the subject property, 1024 Pacific Street was identified in the Historical Auto Stations Database as Down Right Truck Body Repairs from 2001 through 2006. In addition, fire insurance maps dating from 1988 through 2007 depicted the property as an automotive repair facility (see Section 4.6.2). The address was also associated with an NYSDEC Spill (see Section 4.1.20), which is not thought to pose a significant risk of adversely affecting the subject property.

- Located approximately 100 feet east and topographically upgradient from the subject property, 931 Dean Street was identified in the Historical Auto Stations Database as Dean Auto Repair from 2001 through 2012. In addition, fire insurance maps dating from 1951 through 2007 depicted the property as an automotive repair facility improved with a gas tank (see Section 4.6.2).

Based on the distance and/or location topographically down- or crossgradient, the remaining off-site Historical Auto Stations listings are not anticipated to impact the subject property.

4.2.3 EDR Historical Cleaners

The Historical Cleaners database, a proprietary EDR database, is a listing of potential dry cleaners sites. The review conducted by EDR was limited to those categories of sources that might include dry cleaning establishments. The categories reviewed included, but were not limited to, dry cleaners, cleaners, laundry, Laundromat, cleaning/laundry, wash & dry, etc. Although the subject property was not listed, 10 other facilities within a 0.25 mile radius appeared in the database.

Based on the assumed hydraulic gradient, distance, and/or absence of reported releases, none of these historical cleaner facilities are expected to impact the subject property.

4.2.4 RGA HWS

The EDR Recovered Government Archive State Hazardous Waste (RGA HWS) database provides a list of SHWS incidents derived from historical databases and includes many records that no longer appear in current government lists. The subject property was not listed in the database.

4.2.4 RGA LF

The EDR Recovered Government Archive Landfill database provides a list of landfills derived from historical databases and includes many records that no longer appear in current government lists. The database is compiled from records formerly available from the Department of Environmental Conservation in New York. The subject property was not listed in the database.

4.3 TIER-1 VAPOR ENCROACHEMENT SCREENING

A Tier-1 Vapor Encroachment Screen was performed at the subject property in accordance with ASTM Standard Guide E2600-10, *Standard Guide for Vapor Encroachment Screening on Property Involved in Real Estate Transactions* (E2600-10 Standard) (ASTM, 2010) to determine if a vapor encroachment condition (VEC) exists at the subject property, as defined by the E-2600-10 Standard. The Tier-1 Vapor Encroachment Screen consisted of a review of Federal and State record sources for facilities of potential environmental concern within an established search distance of up to 1/3-mile from the subject property for non-petroleum related chemicals of concern (COC) and up to 1/10-mile from the subject property for petroleum-related COC. The review of environmental record sources was accomplished utilizing a computer database search report provided by EDR (EDR, 2014a) (Appendix C) and through a review of online New York City Office of Environmental Remediation (NYCOER) records. Sites of potential environmental concern were then evaluated further to determine if a potential VEC exists with respect to the subject property. In determining if a VEC exists, EPM considered, among other things, assumed groundwater flow direction, release status, proximity of potential off-site sources to the subject property, and professional judgment.

As required by the E2600-10 Standard, the following databases were reviewed as part of the Tier-1 Vapor Encroachment Screen for information regarding documented and/or suspected releases of regulated hazardous substances and/or petroleum products on or near the subject property. Each database identified in the table below has been described in detail in the preceding Sections of this report and are not described here.

Federal and State List	**Subject Property Appears on List**	**Number of Sites Within Search Radius***	
		1/10-mile	**1/3-mile**
National Priorities List for Federal Superfund Cleanup (NPL)/Delisted NPL/Proposed NPL	No	0 / 0 / 0	0 / 0 / 0
Comprehensive Environmental Response, Compensation, and Liability Information System (CERCLIS) /CERCLIS No Further Remedial Action Planned (NFRAP)	No	0 / 0	0 / 0
Resource Conservation and Recovery Information System – Treatment, Storage, or Disposal Facilities (RCRA-TSDF)/RCRIS Corrective Action Activity (CORRACTS)	No	0 / 0	0 / 0
Resource Conservation and Recovery Information System Generators/Transporters (RCRA Gen/Trans)/Non Generators (RCRA NonGen/NLR)	No	N/A	N/A
Emergency Response Notification System (ERNS)	No	N/A	N/A
US Engineering Controls (US ENG CONTROLS)	No	N/A	N/A
US Institutional Controls (US INST CONTROLS)	No	N/A	N/A
State Hazardous Waste Sites (SHWS)	No	0	0
Solid Waste Facilities (SWF/LF)	No	1	2
Leaking Underground Storage Tanks (LTANKS)	No	4	14
NY Spills	No	18	6
Underground Storage Tank (UST)	No	N/A	N/A
Aboveground Storage Tanks (AST)	No	N/A	N/A
Institutional Controls (INST CONTROL)	No	N/A	N/A
Voluntary Cleanup Sites (VCP)	No	0	0
Brownfields (Brownfields)	No	0	0
Drycleaners	No	0	2

4.3.1 Potential Off-Site Vapor Sources

EPM identified 47 facilities as potential off-site vapor sources in records reviewed as part of EDR's database search report. Based on the assumed hydraulic gradient at the subject property to the north, case statuses, magnitude of release, and/or distances from the subject property, a VEC can be ruled out with respect to all of these listings.

4.3.2 Potential On-Site Vapor Sources

The subject property was not identified in the database search. However, based on the duration of onsite use for manufacturing and the former presence onsite of a chemical works and chemical storage structure (see Sections 4.6.2 and 4.6.5), a potential on-site vapor source does exist on the subject property.

4.4 ADDITIONAL ENVIRONMENTAL RECORD SOURCES

Additional state and local records sources were investigated in an attempt to supplement information obtained through review of standard environmental record sources. The additional records and sources consulted in conjunction with this Phase I ESA are listed below. Copies of correspondence to, and received from, any of these record sources are included in Appendix H.

4.4.1 New York State Department of Environmental Conservation (NYSDEC)

A Freedom of Information Law (FOIL) inquiry was sent to the NYSDEC on February 4, 2015, to determine whether any records were available for the subject property. A response is pending.

4.4.2 New York City Department of Environmental Protection (NYCDEP)

A FOIL inquiry was sent to the New York City Department of Environmental Protection (NYCDEP) on February 4, 2015 to determine if any records were available for the subject property. A response is pending.

4.4.4 Fire Department of New York City (FDNY)

On February 4, 2015, a FOIL request was filed with the Fire Department of New York City (FDNY) to determine if any records were available for the subject property. A response is pending.

4.4.5 United States Environmental Protection Agency (US EPA)

An online search of US EPA's records was conducted on February 4, 2015, to determine whether any files pertaining to the subject property are available. No records for the subject property were available.

4.4.6 New York City Office of Environmental Remediation (NYCOER)

An online search of NYCOER records was performed on February 4, 2015 in an effort to obtain additional environmental information on the subject property. No records were available for the subject property.

4.4.7 New York City Department of Buildings (NYCDOB)

According to NYCDOB records reviewed, the subject property measures approximately 235.17 feet by 110 feet. Structures on the subject property are classified as E-3 warehouses, and were constructed in approximately 1900. The subject property is zoned for manufacturing (M1-1).

4.5 PHYSICAL SETTING SOURCES

The subject property occupies a total of approximately 25,850 square feet in Kings County (Brooklyn), New York. The approximate coordinates of the subject property are 40°40'44.60" North Latitude and 73°57'35.93" West Longitude.

The portion of Kings County where the subject property is situated is located within the Crown Heights neighbourhood. The subject property is situated within an area dominated by residential, commercial, and automotive use. Figure 1 is an annotated U.S. Geological Survey (USGS) 7.5-minute quadrangle showing the subject property location, local topography, drainage and cultural features.

The following subsections provide a description of the natural and physical setting of the subject property and immediate vicinity. Included are details regarding topography and site drainage, the nature of the underlying geology and hydrogeology, and nearby surface water and wetlands.

4.5.1 Topography

According to the USGS 7.5-Minute Quadrangle Series, Brooklyn Quadrangle, NY (USGS, 2014), topography in the vicinity of the subject property slopes to the north with the subject property at an elevation of approximately 95 feet above mean sea level (msl). The nearest topographic high point in the vicinity of the site is located approximately 0.6 miles south-southwest of the subject property with an elevation of 200 feet msl.

4.5.2 Geology and Soil

According to the United States Department of Agriculture (USDA) Natural Resource Conservation Service's *New York City Reconnaissance Soil Survey* (NRCS, 2009), surficial soil at the subject property consists primarily of pavement and buildings underlain by till substratum with 0 to 5 percent slopes. Over 80% of the surface is covered by impervious surfaces such as pavement or buildings.

According to the *Surficial Geologic Map of New York, Hudson Valley Sheet*, surficial deposits beneath the Site consist of proglacial outwash sand and gravel (Stone, 2002). This material is described as coarse to fine gravel with sand with a thickness of about 150 feet (Buxton and Shernoff, 1999). According to *Ground-water resources of Kings and Queens Counties, Long Island, New York,* surficial glacial deposits are underlain by crystalline bedrock at approximately -100 feet msl (Buxton and Shernoff, 1999).

4.5.3 Hydrogeology

According to the *History and Hydrologic Effects of Ground- Water Use in Kings, Queens, and Western Nassau Counties, Long Island, New York, 1800's through 1997*, groundwater is expected to be encountered at a depth of 85-90 feet below grade (Cartwright, 2002). Based on topography and historic groundwater contours, groundwater is generally expected to flow north (Cartwright, 2002). Groundwater is not a component of the public water supply in Kings County, but approximately 22 million gallons per day of groundwater are used as a component of the industrial water supply.

4.5.4 Surface Water and Wetlands

Wetlands are defined according to hydrophytic vegetation, hydric soils, hydrology, and other characteristics. According to the National Wetland Inventory published by the US Fish and Wildlife Service (USFWS), wetlands are not located on or in the vicinity of the subject property.

4.5.5 Flood Zone Data

A review of flood zone data (FEMA, 2015) indicates that the subject property is located outside of the 100- and 500-year flood zones.

4.6 HISTORICAL USE INFORMATION ON THE SITE

Information on the history of the subject property was obtained through interviews with persons familiar with the area, municipal records, historic maps, and aerial photographs. A summary of this subject property history is described here, with detailed information presented in the subsections below.

4.6.1 Aerial Photographs

EPM obtained historical aerial photographs from EDR (EDR, 2014b) for the years 1924, 1944, 1951, 1954, 1961, 1966, 1974, 1984, 1994, 2006, 2009, and 2011. EPM also reviewed aerial photographs for the years 1954, 1966, 1980, 1994, 2004, and 2006 from NETR Online at www.historicaerials.com. Copies of EDR aerial photographs are available in Appendix D.

Photograph Year(s): 1924

In the 1924 aerial photograph, the majority of the subject property was developed with a warehouse. The southeastern corner of the subject property was visibly developed with smaller structures and a small undeveloped area. The subject property was bounded to the north by Pacific Street. Several larger structures visually consistent with commercial or industrial warehouses were visible to the north and northeast of the subject property. Remaining adjacent properties appeared developed with smaller structures visually consistent with residential development.

Photograph Year(s): 1944

The southeastern half of the subject property was not visible on the aerial photograph. Two small canopies were visible to the northeast and northwest of a large north adjacent warehouse. These canopies were visually consistent with property use as an automotive fuelling station. No other significant changes from the 1924 aerial photograph were observed.

Photograph Year(s): 1951-1954

The southwestern small structure previously visible improving the eastern end of the subject property was no longer observed. A south adjacent property appeared as a lot ringed with parked cars. No other significant changes from the 1944 aerial photograph were observed.

Photograph Year(s): 1961-1966

Two small, square structures were visible within the south adjacent property previously developed as a parking lot. No other significant changes from the 1954 aerial photograph were observed.

Photograph Year(s): 1974

The property south and southeast adjacent to the subject property appeared as an undeveloped lot used to store refuse. No other significant changes from the 1966 aerial photograph were observed.

Photograph Year(s): 1980-1994

The two small structures improving the eastern end of the subject property were no longer visible, and the now-vacant area was marked with lines indicative of a parking lot. No other significant changes from the 1974 aerial photograph were observed.

Photograph Year(s): 2004-2011

The west adjacent property appeared as undeveloped lot periodically occupied by a number of vehicles. No other significant changes from the 1994 aerial photograph were observed.

4.6.2 Fire Insurance Maps

EPM obtained historical fire insurance Maps (Sanborn Maps) from EDR for the years 1888, 1904, 1906, 1926, 1951, 1965, 1978 through 1980, 1982, 1985, 1987, 1988, 1991 through 1995, and 2001 through 2007 (EDR, 2014c). Copies of the fire insurance maps are located in Appendix E.

Map Year(s): 1898

In the 1898 fire insurance map, the subject property was depicted as divided into 11 lots, identified from east to west as 998 through 1018 Pacific Street. A one story shed was located at the southern ends of 1000 and 1002 Pacific Street, along a western portion of the subject property's southern border. Two two-story residential structures improved with basements were located near the subject property's eastern end, on 1014 and 1016 Pacific Street. An attached one-story structure of indeterminate use was located on 1012 Pacific Street. The remainder of the subject property was depicted as undeveloped.

The subject property was bounded to the north by Pacific Street. Adjacent properties appeared either as undeveloped or improved with residential structures. A row of residential structures southwest adjacent and topographically upgradient to the subject property were described as having "brick basements extensions used as coal & wood sheds." Fink's Coal and Wood Yard was located approximately 170 feet northeast and topographically downgradient of the subject property.

Map Year(s): 1904

The subject and adjacent properties were not depicted in the 1904 fire insurance map.

Map Year(s): 1906

The northeastern corner of the subject property and adjacent properties to the west and south were depicted with residential structures. The two northern residential structures were improved with a basement. The southern portion of second easternmost lot (1016 Pacific Street) was improved with a two-story structure labelled as "chemical storage." The remainder of the subject property was depicted as undeveloped.

The southwest adjacent properties were no longer labelled as having coal and wood sheds. Larger structures identified as General Insulate & Machine Co. and a Long Island Railroad (LIRR) power substation were depicted approximately 180 feet north and topographically downgradient of the subject property. The property located approximately 170 feet northeast and formerly improved as Fink's Coal and Wood Yard was depicted as the Minett Varnish Co. No other significant changes from the 1898 fire insurance map were observed.

Map Year(s): 1926

The western nine-elevenths of the subject property were developed as the two-story National Biscuit Co. facility. The facility was improved with first floor offices at the facility's northwestern corner, a central area labelled as wire glass (WG) monitors, and a small manure pit located along an eastern portion of the facility's southern side. The two-story chemical storage structure located near the southeastern corner of the subject property was identified as a chemical works. The residential structure previously located north of the chemical storage structure was no longer depicted.

Across Pacific Street, the north adjacent property was developed as a large garage and automotive showroom improved with two unused gasoline tanks. The property located approximately 115 feet northeast and across Pacific Street was developed as several large automotive garage and repair facilities, improved with several gasoline tanks. No other significant changes from the 1906 fire insurance map were observed.

Map Year(s): 1951

The central northern portion of the National Biscuit Co. facility was identified as loading platforms. The eastern portion of the facility was identified as a garage on the first floor. The area near the subject property's southeastern corner, formerly developed with a chemical works structure, was shown as undeveloped except for a single gasoline tank in the center of the lot's northern half.

Across Pacific Street, the north adjacent property was developed as a large automotive brake service facility. The property located approximately 180 feet and topographically downgradient from the subject property previously improved with the General Insulate & Machine Co. was developed as an automotive fueling station. An automotive fueling station was also shown approximately 150 feet north of the subject property. Across Pacific Street, the northeast adjacent property was developed as an electrical contractors' facility, improved with several gasoline and fuel oil tanks.

Automotive repair facilities were identified approximately 100 feet east and 180 feet south of the subject property. A large cleaning and dyeing works was located approximately 290 feet south of the subject property. No other significant changes from the 1926 fire insurance map were observed.

Map Year(s): 1965

Across Pacific Street, the northeast adjacent property previously developed as an electrical contractors' facility was shown as a residential and manufacturing structure. The south adjacent properties were developed as a linen depot and a parking structure.

A property located approximately 100 feet northwest of the subject property across Pacific Street was developed as a metal working facility. The automotive sales and service facility previously identified approximately 120 feet northeast of the subject property was developed as a residential structure. The automotive repair facility previously identified approximately 180 feet south of the subject property was developed as a storage facility. The property located approximately 290 feet south of the subject property and previously depicted as a cleaning and dyeing facility was labelled as a chemical canning facility. A nearby property, also approximately 290 feet south of the subject property, was identified as a chemical supply facility. No other significant changes from the 1951 fire insurance map were observed.

Map Year(s): 1978-1980

The western nine-elevenths of the subject property were identified as a manufacturing facility of an indeterminate nature. The remaining eastern portion of the subject property was depicted as undeveloped.

The property located approximately 100 feet northwest of the subject property and previously identified as a metal working facility was developed as an automotive repair facility. The automotive fueling station previously depicted approximately 180 feet north of the subject property was developed as an automotive repair facility. The previously identified chemical canning facility located approximately 290 feet south of the subject property remained in place, however the nearby chemical supplies facility was no longer depicted. No other changes from the 1965 fire insurance map were observed.

Map Year(s): 1982-1987

The property located approximately 150 feet north of the subject property and identified as an automotive fuelling station was identified as an automotive repair facility. No other significant changes from the 1980 fire insurance map were observed.

Map Year(s): 1988-2007

An automotive repair facility was depicted approximately 50 feet east of the subject property. No other significant changes from the 1987 fire insurance map were observed.

4.6.3 Recorded Land Title and Lien Records

As of the date of this assessment, a title search had been commissioned by the User and is in production (see Section 3.1). Title documentation will be reviewed as it becomes available.

4.6.4 USGS Topographic Maps

EPM obtained historical target quad topographic maps of the subject property from EDR (EDR, 2014d) for the years 1900, 1924, 1947, 1956, 1967, 1979, and 1995. Copies of topographic maps are included in Appendix F.

The 1900, 1924, and 1947 topographic maps depicted the subject property as developed with an indeterminate structure or structures. The subject property was bounded to the north by Pacific Street. Adjacent properties were shown as similarly developed.

The 1956, 1967, 1979, and 1995 topographic maps shaded the subject and adjacent properties red to indicate development of an unspecified nature.

4.6.5 Local Street Directories

City Directories identify historical land uses at the subject property and surrounding area, as well as potential areas of environmental concern by listing the current and past tenants at each address. EPM requested a search of city directories for the subject property and surrounding area from EDR in order to evaluate any potential liability on the subject property resulting from past activities (EDR, 2014e).

Multiple sources were reviewed covering the years 1928, 1934, 1945, 1949, 1960, 1965, 1970, 1973, 1976, 1980, 1985, 1992, 1997, 2000, 2005, 2008, and 2013. EDR indicated the sources of these records to be Cole Information Services, Hill-Donnelly Corporation, New York Telephone (Company), NYNEX (Information Resources Company), and R. L. Polk & Co.

The subject property was identified in the 1928, 1934, 1945, 1949, 1960, 1965, 1976, 1985, 1992, 1997, 2000, 2005, 2008, and 2013 records (see table below). The EDR City Directory Report is included in Appendix G.

Year	***Listing***	***Source***
1928	Solar Chemical Manufacturing Co.	New York Telephone
1934	Residential, Treas Auto Repairs	R. L. Polk & Co.
1945	Residential	New York Telephone
1949	Residential	New York Telephone
1960	Residential	New York Telephone
1965	Residential	New York Telephone
1976	Residential	New York Telephone
1985	Magic Seal Inc., P. Puchkoff & Sons Inc., Percy's Auto Colusion (sic)	NYNEX Information Resource Co.
1992	Debby's Chair Rental, Magic Seal Inc.	NYNEX Information Resource Co.
1997	Affinity Creations Inc.	NYNEX Information Resource Co.
2000	Affinity Creations Inc.	Cole Information Services
2005	Affinity Creations Inc.	Hill-Donnelly Corporation
2008	Affinity Creations Inc.	Cole Information Services
2013	Affinity Creations Inc.	Cole Information Services

The previous use of the subject property as a chemical manufacturing facility and automotive repair facility indicates the potential usage, storage, and release of solvents, metals, and petroleum products which may have impacted the subject property.

EPM observed no offsite listings of concern with regards to the subject property, based on use, distance, and/or assumed hydraulic gradient.

4.6.6 Previous Investigation Reports

No previous environmental investigation reports were made available to EPM for review.

4.7 HISTORICAL USE INFORMATION ON ADJOINING PROPERTIES

Information on history of adjoining properties was obtained through a review of public records, fire insurance maps, topographic maps, city directories, and aerial photographs.

The Site vicinity is currently and was historically used for residential, commercial, and automotive development. Historical records reviewed indicated the presence of the following environmental concerns:

- Fire insurance maps dating from 1926 through 2007 depicted the north adjacent property as a large automotive repair facility improved with several gas tanks.
- Located approximately 50 feet east of the subject property, 1024 Pacific Street was identified in the Historical Auto Stations Database as Down Right Truck Body Repairs from 2001 through 2006 (see Section 4.2.2). In addition, fire insurance maps dating from 1988 through 2007 depicted the property as an automotive repair facility (see Section 4.6.2). The address was also associated with an NYSDEC Spill (see Section 4.1.20), which is not thought to pose a significant risk of adversely affecting the subject property.
- Located approximately 100 feet east and topographically upgradient from the subject property, 931 Dean Street was identified in the Historical Auto Stations Database as Dean Auto Repair from 2001 through 2012 (see Section 4.2.2). In addition, fire insurance maps dating from 1951 through 2007 depicted the property as an automotive repair facility improved with a gas tank (see Section 4.6.2).

Based on type and duration of property use, proximity, and/or presumed hydraulic gradient to the north, these properties are thought to pose a threat of adversely impacting the subject property.

5.0 SITE RECONNAISSANCE

Mr. Judah Lebow of EPM conducted an inspection of the Site on February 5, 2015. Mr. Giuseppe Montalbano of Weichart Realty and owner representative accompanied EPM during the inspection. Select photographs taken during the site inspection are included in Appendix A.

5.1 METHODOLOGY AND LIMITING CONDITIONS

At the time of EPM's February 5, 2015 site visit, the roof of and grounds surrounding the warehouse on the subject property were coated with a layer of snow and ice, preventing complete investigation of these surfaces. EPM was able to access all other areas of the subject property.

5.2 GENERAL SITE SETTING

At the time of EPM's site visit, the majority of the subject property was developed as a two story warehouse in use for the manufacturing of commercial display hardware. The remainder of the subject property was a lot in use for storage and vehicle parking. The property was accessible from the north adjacent Pacific Street.

Surrounding properties are predominantly developed with residential, commercial, and automotive structures (see Section 2.5).

5.3 EXTERIOR OBSERVATIONS

The majority of the subject property was developed with a large two-story warehouse. The subject property was accessible from north adjacent Pacific Street. A vent pipe was observed near the eastern end of the building's north side. The sidewalk surrounding the vent pipe was covered with snow and ice, preventing a complete visual assessment. Several vehicle loading entrances and associated roll-up gates were observed along the structure's north side, as well as two personnel entrances. An external staircase accessible from Pacific Street and extending up to the second floor was observed on the building's eastern side.

A small eastern portion of the subject property was an undeveloped lot in use for storage and parking, with access from Pacific Street to the north. Several empty drums were observed within the lot. According to fire insurance maps dating from 1951 through 1965, a gas tank was located in the yard, near the northern end of the building and currently within the approximate footprint of the building's exterior staircase. No indication of a gas tank was observed in the undeveloped lot. At the time of the February 5, 2015 site assessment, the area indicated on the fire insurance maps as the site of the gas tank was covered with snow and ice.

5.4 INTERIOR OBSERVATIONS

A small cellar improved a northwestern portion of the building, and housed a defunct number two fuel oil boiler. The remainder of the cellar was primarily in use for miscellaneous storage. Indications as to the current or former locations of an aboveground or underground storage tank of number two fuel oil were not observed in the basement.

The west side of the building's first floor was in use as a hardware storage area, a paint storage area, and a bathroom. The north side of the building's first floor was in use as offices, a loading area, and a machine repair area. Several small forklifts were located within the loading area. The eastern third of the building's first floor was split between a large northern woodworking area and a small southern paint shop. The paint shop included a spray booth and several paint storage areas. No floor drains were observed within the paint shop. The remainder of the building's first floor was in use for machine-assisted assembly and manual painting. Several air compressors were stored within this area as well as a 55-gallon steel drum of contact wood adhesive. A cable-driven elevator was located west of the woodworking area.

The building's second floor was primarily in use as offices, miscellaneous storage, and an area for manual operations such as assembly and packing. Several paint storage cabinets were located in the southeastern corner of the second floor.

A small room connected the elevator shaft to the roof at the roof level and was used for miscellaneous storage at the time of EPM's February 5, 2015 site visit.

6.0 INTERVIEWS

EPM inquired as to the availability for interviews of past owners, operators, and occupants of the property who were likely to have material information regarding the potential for contamination at the property, to the extent that such persons could be identified. Information received is described below.

6.1 INTERVIEWS WITH OWNER

On February 5, 2015 EPM conducted a personal interview with Ms. Lisa Martensson, owner of the subject property, consisting of the following information:

- Ms. Martensson has owned the subject property since 1994, prior to which the property was owned by a P. Puchkoff, who used it for the labelling of shopping bags.
- The subject property is currently used in the manufacture and shipping of commercial display hardware such as cabinets, racks, and stands.
- The heating system for the warehouse is powered by natural gas, and has been since before 1994.
- Fluorescent light fixtures are present at the subject property.
- No spills have occurred on the property.
- No remediation actions have been performed on the property.
- No wells were reported at the subject property.
- No recharge basins, retention basins or holding basins are present on the property.
- No septic or cesspool systems are located on-site.
- The subject property's buildings are served by local water, sanitary and storm water utilities.
- The subject property currently uses a natural gas heating system.
- The owner is not aware of any environmental or other permits, enforcement actions, or violations of environmental regulations issued for the subject property.

6.2 INTERVIEWS WITH SITE MANAGER

Ms. Martensson manages the subject property (see Section 6.1).

6.3 INTERVIEWS WITH OCCUPANTS

As of the date of this assessment, no subject property occupants were available for interview.

6.4 INTERVIEWS WITH LOCAL GOVERNMENT OFFICIALS

Government officials were contacted via FOIL requests. The findings are presented in Section 4.4.

7.0 FINDINGS

EPM has completed a Phase I ESA for the subject property located at 1010 Pacific Street in Brooklyn, New York (Block 1133, Lots 32 and 42). The Phase I ESA was conducted in general conformance with ASTM Standards related to the Phase I ESA process. The Phase I ESA was based on a site inspection, interviews with personnel familiar with the subject property, a review of available files and historical records, and the findings of an environmental database report. The purpose of the Phase I ESA was to identify potential RECs at the subject property and the potential implications of those RECs for the potential property purchase or refinancing of the subject property.

7.1 RECOGNIZED ENVIRONMENTAL CONDITIONS

Based on the data obtained during the site inspection, subsequent regulatory and records review, and interviews with persons familiar with the subject property and its history, EPM identified the following RECs associated with the subject property:

- During a February 5, 2015 site visit EPM observed a number two fuel oil-burning boiler in the cellar of the subject property, located in the northwestern corner of the onsite warehouse footprint. According to the owner of the subject property, the onsite building has been heated using natural gas prior to its most recent purchase in 1994. The owner of the subject property was unaware of the location of any current or former underground or aboveground number two fuel oil storage tank(s) onsite. EPM observed no indication of tank location during the site visit with the exception of an exterior vent pipe north of the cellar. Fire insurance maps dating from 1951 and 1965 identify a gas tank in the vacant lot to the east of the onsite warehouse, approximately 170 feet east of the cellar boiler.

- Fire insurance maps dating from 1926 through 2007 indicated that the majority of the subject property was in use for manufacturing, first for the National Biscuit Company and later for indeterminate manufacturing. A 1906 fire insurance map depicts a chemical storage structure near the subject property's southeastern corner. A 1926 fire insurance map shows the same structure as a chemical works. City directory records indicate that chemical manufacturing occurred onsite in 1928. City directory records also indicate that automotive repair took place on the subject property in 1934 and 1985. Based on their durations and/or location on the subject property, these past uses constitute the potential to adversely impact the subject property.

- Fire insurance maps dating from 1926 through 2007 depicted the north adjacent property as a large automotive repair facility improved with several gas tanks. Fire insurance maps dating from 1951 and 1988 through 2007 depicted automotive repair facilities 100 feet east and 50 feet south of the subject property, respectively. These latter two properties were also identified in EDR's Historical Auto Stations Database. Based on the size, use, duration of use, proximity, and/or location topographically upgradient, these properties constitute the potential to adversely impact the subject property.

7.2 HISTORICAL RECOGNIZED ENVIRONMENTAL CONDITIONS

No historically recognized environmental conditions were identified for the subject property.

7.3 OTHER ENVIRONMENTAL CONDITIONS

- At the time of EPM's site reconnaissance, the subject property was improved with fluorescent light fixtures. Prior to any renovation or demolition which may impact them, EPM recommends inspecting these fixtures for the presence of PCB-containing ballasts.

- According to New York City Department of Buildings records reviewed, structures on the subject property were constructed in approximately 1900 (see Section 4.4.7). Based on the time of original construction, asbestos-containing materials and lead-based paint may be present within structures at the subject property. Prior to any renovation or demolition which may impact them, EPM recommends conducting asbestos and lead-based paint inspections to determine the condition, quantity, and location of these materials, and removing them in accordance with federal, state, and local regulations.

8.0 OPINION

Based on the findings of this ESA (see Section 7), EPM recommends conducting further investigation in connection with these noted RECs.

9.0 CONCLUSIONS

EPM has performed a Phase I ESA in general conformance with the scope and limitations of ASTM Practice E 1527-13 of the property located at 1010 Pacific Street, Brooklyn, New York. Any exceptions to, or deletions from this practice are described in Section 10 of this report. This assessment has revealed the following RECs in connection with the property:

- During a February 5, 2015 site visit EPM observed a number two fuel oil-burning boiler in the cellar of the subject property, located in the northwestern corner of the onsite warehouse footprint. According to the owner of the subject property, the onsite building has been heated using natural gas prior to its most recent purchase in 1994. The owner of the subject property was unaware of the location of any current or former underground or aboveground number two fuel oil storage tank(s) onsite. EPM observed no indication of tank location during the site visit with the exception of an exterior vent pipe north of the cellar. Fire insurance maps dating from 1951 and 1965 identify a gas tank in the vacant lot to the east of the onsite warehouse, approximately 170 feet east of the cellar boiler.

  In the absence of any available records detailing the closure and/or removal of an onsite tank or tanks, EPM recommends conducting a ground-penetrating radar (GPR) survey to determine the location of any subsurface tanks or associated systems on the subject property. Based on the results of the GPR survey, additional subsurface investigation may be warranted.

- Fire insurance maps dating from 1926 through 2007 indicated that the majority of the subject property was in use for manufacturing, first for the National Biscuit Company and later for indeterminate manufacturing. A 1906 fire insurance map depicts a chemical storage structure near the subject property's southeastern corner. A 1926 fire insurance map shows the same structure as a chemical works. City directory records indicate that chemical manufacturing occurred onsite in 1928. City directory records also indicate that automotive repair took place on the subject property in 1934 and 1985. Based on their durations and/or location on the subject property, these past uses constitute the potential to adversely impact the subject property.

  A subsurface investigation would be recommended in order to determine if impacts to the subject property from these previous onsite uses have occurred.

- Fire insurance maps dating from 1926 through 2007 depicted the north adjacent property as a large automotive repair facility improved with several gas tanks. Fire insurance maps dating from 1951 and 1988 through 2007 depicted automotive repair facilities 100 feet east and 50 feet south of the subject property, respectively. These latter two properties were also identified in EDR's Historical Auto Stations Database. Based on the size, use, duration of use, proximity, and/or location topographically upgradient, these properties constitute the potential to adversely impact the subject property.

  A subsurface investigation would be recommended in order to determine if impacts to the subject property from these previous off-site uses have occurred.

10.0 DEVIATIONS

No deviations from ASTM Standard Practice E1527-13 were noted for this Phase I ESA.

11.0 ADDITIONAL SERVICES

The scope of work for this Phase I ESA update did not include evaluation of potential asbestos-containing materials, radon gas, or lead-based paint. However, information related to radon gas was provided in the EDR Report (EDR, 2014a), and is therefore conveyed here. According to the EDR Report, the EPA classifies Kings County as located in Radon Zone 3 (indoor average below 2 picocuries per liter [pCi/L]). Federal radon information for Kings County reports an average level of 0.750 pCi/L for living areas and 0.1370 pCi/L for basements, based on 51 tested sites.

The scope of work for this ESA did not address other non-scope considerations, including, but not limited to:

- Wetlands protection;
- Regulatory compliance;
- Cultural and historic resources;
- Industrial hygiene;
- Health and safety;
- Ecological resources;
- Air quality;
- Biological agents;
- Asbestos-containing materials;
- Lead-based paint;
- Mold;
- Flood hazards;
- Electromagnetic fields;
- Seismic hazards;
- Stormwater management or drainage;
- Structural engineering or integrity;
- Geotechnical engineering;
- Public safety; or
- Dam safety.

12.0 REFERENCES

ASTM (ASTM International), 2010. *Standard Guide for Vapor Encroachment Screening on Property Involved in Real Estate Transactions*, West Conshohocken, Pennsylvania, June 2010.

ASTM (ASTM International), 2013. *Standard Practice for Environmental Site Assessments: Phase I Environmental Site Assessment Process, E 1527-13*, West Conshohocken, Pennsylvania, November 2013

Baskerville, C.A., 1992, *Bedrock and Engineering Geologic Maps of Bronx County and Parts of New York and Queens Counties, New York*: U.S. Geological Survey, Miscellaneous Investigations Series Map I-2003.

Buxton, Herbert T. and Peter K. Shernoff. 1999. *Ground-water resources of Kings and Queens Counties, Long Island, New York*. USGS Water Supply Paper: 2498, 1999

Cartwright, Richard A., 2002. *History and Hydrologic Effects of Ground- Water Use in Kings, Queens, and Western Nassau Counties, Long Island, New York, 1800's through 1997*. USGS, 2002.

EDR (Environmental Data Resources, Inc.), 2014a. *The EDR Radius Map Report with Geocheck, 1010 Pacific Street, Brooklyn, NY 11238*, February 2, 2105.

EDR, 2014b. The *EDR Aerial Photo Decade Package, 1010 Pacific Street, Brooklyn, NY 11238*, February 2, 2105.

EDR, 2014c. *Certified Sanborn Map Report, 1010 Pacific Street, Brooklyn, NY 11238*, February 2, 2105.

EDR, 2014d. *EDR Historical Topographic Map Report, 1010 Pacific Street, Brooklyn, NY 11238*, February 2, 2105.

EDR, 2014e. *The EDR-City Directory Abstract, 1010 Pacific Street, Brooklyn, NY 11238*, February 2, 2105.

National Wetland Inventory (United States Fish and Wildlife Service, Division of Habitat and Resource Conservation), Digital Wetland Mapper, 2014. http://wetlandsfws.er.usgs.gov/NWI/index.html

New York City Soil Survey Staff. *New York City Reconnaissance Soil Survey*, United States Department of Agriculture, Natural Resources Conservation Service, Staten Island, NY, 2009.

USGS (United States Geological Survey), 2014. *7.5-Minute Quadrangle Series, Brooklyn Quadrangle.* 2014

13.0 SIGNATURES OF ENVIRONMENTAL PROFESSIONALS

The environmental professionals whose signatures are provided below performed and reviewed this environmental site assessment.

We declare that, to the best of our knowledge and belief, we meet the definition of Environmental Professional as defined in §312.10 of 40 CFR 312. We have the specific qualifications based on education, training, and experience to assess a property of the nature, history, and setting of the subject property. We have developed and performed the all appropriate inquiries in conformance with the standards and practices set forth in 40 CFR Part 312.

PREPARED BY: 

Judah Lebow

APPROVED BY: 

A. Stacey Gogos

DATE: February 13, 2015

14.0 QUALIFICATIONS OF ENVIRONMENTAL PROFESSIONALS

Appendix B contains supporting documentation of the qualifications of the environmental professionals identified above (Section 13.0).

Integral Engineering, P.C.
61 Broadway
Suite 1601
New York, NY 10006

telephone: 212.962.4303
facsimile: 212.962.4302
www.integral-corp.com

May 1, 2015 Project No. E090

Rocco Basile
AVO Construction LLC

Subject: Limited **Phase II Environmental Site Assessment**
1010-1015 Pacific Street, Brooklyn, NY

Dear Mr. Basile:

Integral Engineering, P.C. (Integral) is pleased to present to AVO Construction, LLC (AVO) this letter summarizing the findings of a limited subsurface investigation performed at the above-referenced property (the Site).

BACKGROUND

The 0.6 acre Site, located at 1010-1015 Pacific Street, Brooklyn, NY, is also identified as Block 1133, Lots 32 and 42. The Site is improved by a two-story warehouse and a vacant lot.

Phase I ESA

In February 2015, Environmental Planning & Management, Inc. (EP&M) performed a Phase I Environmental Site Assessment (ESA) at the Site. The Phase I ESA Report (dated February 13, 2015) identified the following Recognized Environmental Conditions:

- **Building cellar.** At the time of the Phase I site inspection, the cellar in the north corner of the building contained a decommissioned boiler. The cellar also contained floor drains. The current owner was unaware of the presence of an underground storage tank (UST) that serviced the boiler. The owner was also unaware of how long the boiler had been out of service. EP&M recommended a non-intrusive investigation to attempt to find the tank(s), if any were historically present.

- **Historic use.** The Site was mainly used for manufacturing purposes during the 1900s. Sanborn Fire Insurance Maps (Sanborn maps) from 1906 and 1926 depict the south corner of the property as being used for chemical storage and processing.

- **Vacant lot UST.** Sanborn maps from 1951 and 1965 identify a gasoline UST on the vacant lot. EP&M was unable to find any other information on this tank. EP&M recommended a non-intrusive investigation to attempt to find the location the tank.

- **Off-site impacts.** The Phase I ESA Report identified adjacent properties to the north, east, and south of the Site with histories of manufacturing and automotive repair use. EP&M recommended a subsurface investigation to determine if any impacts from off-site properties are present at the Site.

Ground Penetrating Radar (GPR) Survey

On February 28, 2015, a GPR survey was conducted by Nova Geophysical Services (Nova), with observation from Integral, to clear soil boring locations and attempt to find the gasoline tank within the vacant lot and the potential fuel oil tank near the cellar.

Nova used GPR to clear locations for soil borings, as follows:

Table 1. Soil Boring Locations

Phase I ESA REC	# of Borings
Cellar (decommissioned boiler, suspected fuel oil tank, floor drains)	1 (SB-1)
Gasoline UST on vacant lot	3 (SB-3, SB-4, SB-5)
Chemical storage/processing on vacant lot	1 (SB-2)
General historic manufacturing use of warehouse	1 (SB-7)

No indications of a subsurface tank were identified in the area of the cellar. However, an anomaly with the approximate dimensions of a 10,000 gallon tank was found within the vacant lot in the location of the gasoline tank identified in the Phase I ESA.

PHASE II SUBSURFACE INVESTIGATION

On March 14, 2015, AARCO Environmental Services Corp. (AARCO) installed six (6) soil borings under the supervision of an Integral geologist. These borings were installed to evaluate the shallow subsurface soil conditions at the following REC locations: building cellar, warehouse, and vacant lot. The remaining REC locations were not investigated due to access limitations. Two (2) soil samples were collected from each boring, with the exception of the cellar boring, in which only one (1) sample was collected.

The soil samples were shipped to Alpha Analytical Laboratory (Alpha), a National Environmental Laboratory Accreditation Program (NELAP) certified laboratory, and were analyzed for the following compounds:

- Volatile Organic Compounds (VOCs) via USEPA Method 8260C;
- Semi-Volatile Organic Compounds (SVOC) via USEPA Method 8270D;
- Target Analyte List (TAL) Metals via USEPA Method 6010B/7470A; and
- Polychlorinated Biphenyls (PCBs) via USEPA Method 608.

Historic fill was observed across the Site from 0 to 10 ft bgs. Historic fill, by definition, is "non-native material, historically deposited on a site to create useable land…which was contaminated prior to placement" (NYSDEC DER-10 Technical Guidance).

Boring logs were created for each boring that show sample depth, soil types, PID readings, and other observations (See Attachment A).

Soil Analytical Results and Analysis

The results from the soil samples were compared to the New York State Department of Environmental Conservation (NYSDEC) CP-51 Unrestricted Use Soil Cleanup Objectives (SCOs).

VOCs

No Unrestricted Use SCOs were exceeded for VOCs in the soil samples. However, several VOCs were detected at lower concentrations: acetone, benzene, ethylbenzene, naphthalene (an SVOC), xylenes, and toluene. The detection of these compounds in the borings immediately adjacent to the suspected gasoline UST on the vacant lot (SB-3, SB-4, and SB-5) could indicate a historic release from the tank; however, it is likely that, if a release had occurred, it was relatively minor in nature due to the low concentrations in the samples.

SVOCs

Seven (7) SVOCs were detected above Unrestricted Use SCOs in the shallow soil samples (5-10 ft below ground surface [bgs])of two borings, SB-4 and SB-5 (both near the vacant lot gasoline UST). However, all concentrations were within one order of magnitude of its SCO. Low levels of SVOCs found within these two borings could be attributed to the placement of historic fill.

Metals

Concentrations of lead, mercury, and nickel exceeded their respective SCOs in three (3) of the borings advanced on the vacant lot. Similarly to SVOCs, the presence of low levels of these metals could be attributed to the placement of historic fill.

PCBs

No PCBs were detected in any of the soil samples.

Please see Attachment B for a table of all detected compounds and Attachment C for the full laboratory report.

CONCLUSIONS

The constituents detected in the subsurface were indicative of historic fill--typical of this area--and, possibly, a limited petroleum release near the formerly-utilized gasoline tank on the vacant lot. Indications of a widespread spill or release were not observed.

Under commercial or industrial use, it is unlikely that the observed concentrations would trigger remediation (only one SVOC exceeds its Commercial Restricted Use SCO), with the exception of the closure of the vacant lot UST.

Please don't hesitate to contact us with any questions.

Sincerely,

James L'Esperance
Engineer

Keith P. Brodock, P.E.
Senior Managing Engineer

Enclosures
- Figure 1 – Soil Boring Locations
- Attachment A – Boring Logs
- Attachment B – Detected Soil Analytical Data
- Attachment C – Laboratory Report

FIGURE 1

SOIL BORING LOCATIONS

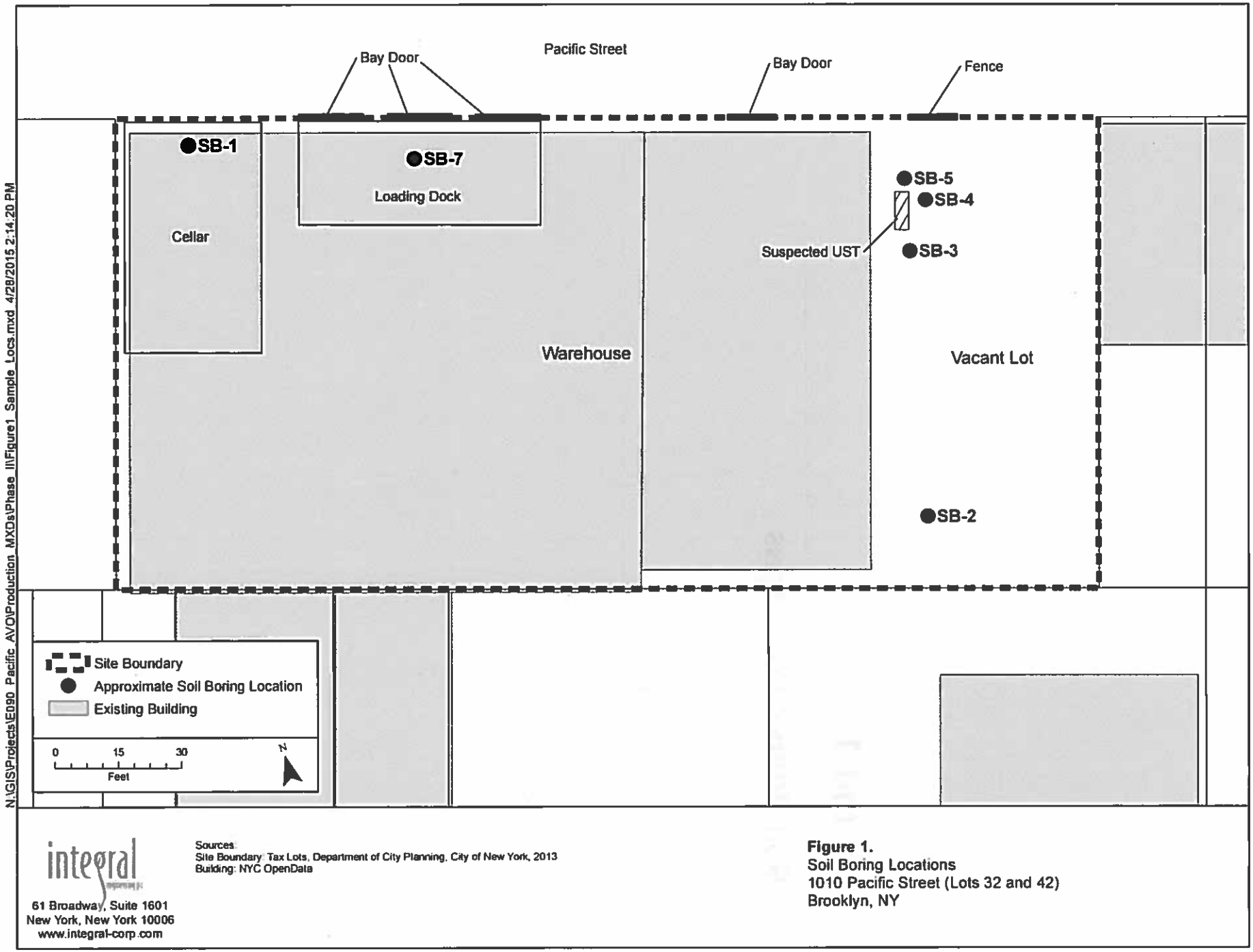

integral

61 Broadway, Suite 1601
New York, New York 10006
www.integral-corp.com

Sources:
Site Boundary: Tax Lots, Department of City Planning, City of New York, 2013
Building: NYC OpenData

Figure 1.
Soil Boring Locations
1010 Pacific Street (Lots 32 and 42)
Brooklyn, NY

ATTACHMENT A

BORING LOGS

integral consulting inc.

61 Broadway Suite 1601
New York, NY 10006
(212) 962-4301

Log of Borehole: SB-01

Project Name: 1010 Pacific Street
Project Number: E090
Logged by: S. McTavey
Date: 3/14/2015

Depth to water: N/A

SAMPLE INFORMATION									
Sample ID	Tag #	Time	Sample Depth	% Recov.	PID (ppm)	Sheen	Depth (Feet)	Symbol	Soil Description (USCS group name, minor components, color, moisture, additional descriptions)
									Top 1' - Concrete slab
					0		--- 1		
								GW	0.5' - RCA and Gravel
					0				
SB-01 (1.5-2 ft below slab)		14:00							
					0		--- 2		
								SW	1.5' - 2': SAND (medium/coarse) and GRAVEL (large, sub-round); some COBBLES (small, sub-round); trace SILT; dark brown; well sorted; moist; no odor
					0		--- 3		
									End of Boring = 3 feet below slab
							--- 4		
							--- 5		

Additional Notes

Boring installed with hand auger; samples collected in 6" intervals.

Sample collected from 1.5'-2' feet below slab.

Drilling Contractor: AARCO
Drilling Method: Direct Push / Georprobe 7822DT
Sampling Equipment: 5' Macro Core
Start/End Time: 13:00 - 14:00
Latitude:
Longitude:
Notes:

Location Sketch

integral consulting inc.

61 Broadway Suite 1601
New York, NY 10006
(212) 962-4301

Log of Borehole: SB-02

Project Name: 1010 Pacific Street
Project Number: E090
Logged by: S. McTavey
Date: 3/14/2015

Depth to water: N/A

SAMPLE INFORMATION									
Sample ID	Tag #	Time	Sample Depth	% Recov.	PID (ppm)	Sheen	Depth (Feet)	Symbol	Soil Description (USCS group name, minor components, color, moisture, additional descriptions)
				55%	0		2 4	GW	Top 3" of Recovery: Asphalt Next 2' 6" of Recovery: FILL (brick; gravel; asphalt; cermaics) and SAND; medium/coarse; brown; well sorted; damp/moist; no odor.
SB-02 (5-10 ftbg)		10:20		47%	0		6 8 10	SW	Top 4" of Recovery: Fall in; FILL and SAND from above. Next 2' of Recovery: SAND (medium/coarse); some SILT and GRAVEL (medium, round); trace coarse SAND; brown; moderately sorted; damp; no odor.
				40%	0		12 14	SW	Top 1' of Recovery: Loose SAND(coarse) and FILL (brick and cinders); wet; no odor. Bottom 1' of Recovery: SILTY fine SAND; trace PEBBLES (medium, round) and SAND (coarse); brown; moist; moderately sorted; no odor.
SB-02 (18-20 ftbg)		10:20		60%	0		16 18 20	SW	Top 1' of Recovery: Fall in; SILTY fine SAND form above; some coarse grains; wet; no odor. Remaining 2' of Recovery; SAND; medium/coarse; some GRAVEL (large, sub-round); trace SILT; brown; well sorted; moist; no odor
									End of Boring 20 ftbg

Additional Notes

Samples collected from 5-10' and 18-20 feet below grade.

Drilling Contractor: AARCO
Drilling Method: Direct Push / Georprobe 7822DT
Sampling Equipment: 5' Macro Core
Start/End Time: 10:00 - 10:25
Latitude:
Longitude:
Notes:

Location Sketch

integral consulting inc.

61 Broadway Suite 1601
New York, NY 10006
(212) 962-4301

Log of Borehole: SB-03

Project Name: 1010 Pacific Street
Project Number: E090
Logged by: S. McTavey
Date: 3/14/2015

Depth to water: N/A

SAMPLE INFORMATION									
Sample ID	Tag #	Time	Sample Depth	% Recov.	PID (ppm)	Sheen	Depth (Feet)	Symbol	Soil Description (USCS group name, minor components, color, moisture, additional descriptions)
				50%	0		2	GW	Top 1' 6" of Recovery: FILL (asphalt, brick, ceramic); SAND; medium/coarse; some GRAVEL (medium, round); brown/grey; moist; moderately sorted; no odor. Bottom 1' of Recovery: SAND; medium/coarse; some FILL (brick) and GRAVEL (medium, round); brown; damp; well sorted; no odor.
							4		
SB-03 (5-10 ftbg)		10:00		37%	0		6	SW	Top 6" of Recovery: SAND (medium/coarse); some GRAVEL (medium, sub-round) and FILL (brick); brown; moist; well sorted; no odor. Next 1' 4" of Recovery: SANDY fine SILT; trace GRAVEL and PEBBLES (small, round); brown; moist; moderately sorted; no odor.
							8		
				55%	0		10	SP	Top 2": of Recovery: Fall in; FILL and SAND Next 7" of Recovery: SILTY fine SAND; dark brown; damp; no odor. Remaining 2' of Recovery: SILTY fine SAND; trace PEBBLES (medium, sub-round); brown/dark brown; mottled; moist; poorly sorted; no odor.
							12		
							14		
				60%	0		16	SP	Top 6" of Recovery: Fall in; SAND and GRAVEL; no odor. Next 1' 6" of Recovery; SILTY fine SAND; trace PEBBLES (medium, sub-round); brown/dark brown; mottled; moist; poorly sorted; no odor.
							18		
SB-03 (18-20 ftbg)		10:00					20	SW	Remaining 1' of Recovery; SANDY medium/fine SILT; some GRAVEL (medium, round) and SAND (coarse); brown; moderately sorted; no odor.
									End of Boring 20 ftbg

Additional Notes

Samples collected from 5-10' and 18-20 feet below grade.

Drilling Contractor: AARCO
Drilling Method: Direct Push / Georprobe 7822DT
Sampling Equipment: 5' Macro Core
Start/End Time: 9:45 - 10:00
Latitude:
Longitude:
Notes:

Location Sketch

integral consulting inc.

61 Broadway Suite 1601
New York, NY 10006
(212) 962-4301

Log of Borehole: SB-04

Project Name: 1010 Pacific Street
Project Number: E090
Logged by: S. McTavey
Date: 3/14/2015

Depth to water: N/A

SAMPLE INFORMATION									
Sample ID	Tag #	Time	Sample Depth	% Recov.	PID (ppm)	Sheen	Depth (Feet)	Symbol	Soil Description (USCS group name, minor components, color, moisture, additional descriptions)
				50%	0		2	GW / SW	Top 1' 6" of Recovery: FILL (asphalt, brick, ceramic); SAND; medium/fine; dark brown/grey; damp; moderately sorted; no odor. Bottom 1' of Recovery: SAND; medium/coarse; some GRAVEL (medium, round) and FILL (brick); brown; damp; well sorted; no odor.
							4		
SB-04 (5-10 ftbg)		8:45		25%	0		6	SW	Top 11" of Recovery: SAND; medium/coarse; some GRAVEL (medium, round) and FILL (brick); brown; damp; well sorted; no odor. Next 4" of Recovery: GRAVEL and SAND; medium/coarse; damp; well sorted; no odor
							8		
							10		
				67%	0		12	SW	Top 7" of Recovery: Fall in; SAND and GRAVEL; no odor. Next 1' 3" of Recovery: SILTY fine SAND; light brown/brown; mottled; moist; no odor Remaining 1' 4" of Recovery: SANDY; medium/fine; some SILT and GRAVEL (medium, round, Qtz, and granite); brown; damp; moderately sortedl no odor.
							14		
							16	SW	Top 4" of Recovery: SAND; medium/coarse; GRAVEL; grey; wet; well sorted; no odor Remaining 2' 2" of Recovery; SAND; medium/coarse; some GRAVEL (medium, round); trace SILT; brown; damp; well sorted; no odor.
SB-04 (17-19 ftbg)		8:45		50%	0		18		
									End of Boring 19 ftbg
							20		

Additional Notes

Samples collected from 5-10' and 17-19 feet below grade.

Drilling Contractor: AARCO
Drilling Method: Direct Push / Georprobe 7822DT
Sampling Equipment: 5' Macro Core
Start/End Time: 8:25 - 8:45
Latitude:
Longitude:
Notes:

Location Sketch

integral consulting inc.

61 Broadway Suite 1601
New York, NY 10006
(212) 962-4301

Log of Borehole: SB-05

Project Name: 1010 Pacific Street
Project Number: E090
Logged by: S. McTavey
Date: 3/14/2015

Depth to water: N/A

SAMPLE INFORMATION									
Sample ID	Tag #	Time	Sample Depth	% Recov.	PID (ppm)	Sheen	Depth (Feet)	Symbol	Soil Description (USCS group name, minor components, color, moisture, additional descriptions)
				28%	0		2 4	GW / SW	Top 1' 5" of Recovery: FILL (asphalt, brick); SAND; medium/coarse; dark brown; moist; moderately sorted; no odor. Bottom 1' of Recovery: SAND; medium/coarse; some FILL (brick); dark brown; well sorted; moist; no odor.
SB-05 (5-10 ftbg)		9:10		27%	0		6 8 10	SW	Top 5" of Recovery: SAND; medium/coarse; some FILL (brick); brown; damp; well sorted; no odor. Next 11" of Recovery: GRAVEL (medium, sub-angular); some SAND; medium/coarse; damp; well sorted; no odor.
				70%	0		12 14	SW	Top 5" of Recovery: Fall in; SAND and FILL (brick); no odor. Next 2' 7" of Recovery: SILTY fine SAND; light brown/brown; mottled; trace GRAVEL (medium, sub-angular); moist; well sorted; no odor. Remaining 8" of Recovery: SAND; medium; light brown/brown; some SILT; moist; no odor.
SB-05 (18-20 ftbg)		9:10		85%	0		16 18 20	SW	Top 6" of Recovery: Fall in; SAND and FILL; no odor. Next 2' 9" of Recovery; SAND; fine; SILT; brown; trace GRAVEL (large, round); poorly sorted; no odor. Remaining 2' of Recovery; SAND; medium/coarse; brown; some SILT; trace GRAVEL (weathered, large, round); well sorted; moist; no odor.
									End of Boring 20 ftbg

Additional Notes

Samples collected from 5-10' and 18-20 feet below grade.

Drilling Contractor: AARCO
Drilling Method: Direct Push / Georprobe 7822DT
Sampling Equipment: 5' Macro Core
Start/End Time: 8:45 - 9:15
Latitude:
Longitude:
Notes:

Location Sketch

integral consulting inc.

61 Broadway Suite 1601
New York, NY 10006
(212) 962-4301

Log of Borehole: SB-07

Project Name: 1010 Pacific Street
Project Number: E090
Logged by: S. McTavey
Date: 3/14/2015

Depth to water: N/A

SAMPLE INFORMATION									
Sample ID	Tag #	Time	Sample Depth	% Recov.	PID (ppm)	Sheen	Depth (Feet)	Symbol	Soil Description (USCS group name, minor components, color, moisture, additional descriptions)
				52%	0		2	GW / SW	Top 17" of Recovery: FILL (asphalt, brick, gravel); SAND; medium/coarse; dark brown; moist; moderately sorted; no odor. Bottom 2' of Recovery: SANDY fine SILT; brown; some GRAVEL (medium, sub-angular); damp; moderately sorted; no odor.
SB-07 (3-5 ftbg)		11:20					4		
				13%	0		6	SW	9" of Recovery: SAND; medium/fine; SILT; some FILL (brick, cinders) and GRAVEL (medium, sub-angular); moderately sorted; damp; no odor. Rock at Tip
							8		
							10		
				65%	0		12	SW	Top 5" of Recovery: Fall in; SANDY medium/fine SILT form above Next 2' 10" of Recovery: SAND; medium; brown; GRAVEL (medium, angular); some COBBLES (red and grey); trace SILT; well sorted; damp; no odor
							14		
							16		
				72%	0		18	SW	3' 7" of Recovery; SAND; medium; GRAVEL (medium, sub-angular); some COBBLES (small, red/grey) and SAND (coarse); trace SILT: well sorted; damp; no odor
SB-07 (18-20 ftbg)		11:20					20		
									End of Boring 20 ftbg

Additional Notes

Samples collected from 5-10' and 18-20 feet below grade.

Drilling Contractor: AARCO
Drilling Method: Direct Push / Georprobe 7822DT
Sampling Equipment: 5' Macro Core
Start/End Time: 10:45 - 11:20
Latitude:
Longitude:
Notes:

Location Sketch

ATTACHMENT B

DETECTED ANALYTICAL DATA

Attachment B. Detected Soil Analytical Data, March 14, 2015, 1010 Pacific Street, Brooklyn, NY.

Location	NYSDEC	SB-1		SB-2		SB-2		SB-3		SB-3		SB-4		SB-4		SB-5		SB-5		SB-7		SB-7		DUP SB-7	
Depth BGS (ft)	Unrestricted	1.5 - 2		5 - 10		18 - 20		5 - 10		18 - 20		5 - 10		17 - 19		5 - 10		18 - 20		3 -5		18 - 20		18 - 20	
Sampling Date	Use SCOs[a]	3/14/15		3/14/15		3/14/15		3/14/15		3/14/15		3/14/15		3/14/15		3/14/15		3/14/15		3/14/15		3/14/15		3/14/15	
Unit		mg/kg		mg/kg		mg/kg		mg/kg		mg/kg		mg/kg		mg/kg		mg/kg		mg/kg		mg/kg		mg/kg		mg/kg	
Total Metals																									
Aluminum, Total		8200		10000		6600		7500		6000		2300		6300		4200		4600		9500		4900		8900	
Antimony, Total		0.67	U	2	J	0.68	U	0.71	U	0.65	U	0.7	U	0.68	U	0.68	U	0.68	U	0.69	U	0.67	U	0.7	U
Arsenic, Total	13	4.6		8		3.7		6.7		3.9		2.7		5.2		3		3.6		5.7		2.8		4.3	
Barium, Total	350	46		98		41		56		28		72		39		81		39		40		30		40	
Beryllium, Total	7.2	0.39	J	0.47	J	0.36	J	0.45		0.24	J	0.16	J	0.38	J	0.14	J	0.24	J	0.4	J	0.3	J	0.37	J
Calcium, Total		22000		3200		620		1500		740		3500		600		25000		880		1200		1200		1200	
Chromium, Total		18		550		21		18		12		5.8		18		10		13		16		13		15	
Cobalt, Total		7.8		8.9		5.2		5.9		11		3.1		7.2		2		5		5.6		5.4		5.9	
Copper, Total	50	17		37		15		21		17		8.3		17		11		14		14		17		13	
Iron, Total		14000		24000		16000		25000		17000		5500		23000		8100		13000		16000		11000		14000	
Lead, Total	63	9.7		220		9.8		110		1.7	J	390		7.2		160		3.8	J	25		4.3		25	
Magnesium, Total		2600		2500		1400		1900		6300		2300		1600		1900		1500		2600		1900		1900	
Manganese, Total	1600	300		510		410		560		320		240		470		150		320		270		280		280	
Mercury, Total	0.18	0.03	J	2.7		0.05	J	2.2		0.02	J	0.17		0.02	J	0.2		0.02	J	0.09		0.02	J	0.1	
Nickel, Total	30	18		20		14		16		45		16		17		7.8		13		18		18		14	
Potassium, Total		1200		1200		600		800		780		520		760		670		950		540		800		500	
Sodium, Total		450		110	J	76	J	73	J	110	J	72	J	72	J	92	J	120	J	120	J	97	J	100	J
Vanadium, Total		25		36		23		32		22		6.9		32		9.4		19		21		20		22	
Zinc, Total	109	25		72		25		65		26		26		40		85		25		33		23		29	
Volatile Organic Compounds																									
Acetone	0.05	0.014		0.0066	J	0.019		0.0072	J	0.0021	J	0.0027	J	0.001	U	0.048		0.001	U	0.0011	U	0.001	U	0.001	U
Benzene	0.06	0.00012	U	0.00015	U	0.00012	U	0.0014		0.00012	U	0.00014	U	0.00012	U	0.00015	U	0.00012	U	0.00012	U	0.00012	U	0.00011	U
Ethylbenzene	1	0.00013	U	0.00016	U	0.00013	U	0.00022	J	0.00012	U	0.00015	U	0.00013	U	0.00016	U	0.00013	U	0.00013	U	0.00012	U	0.00012	U
Naphthalene	12	0.013		0.00018	U	0.00014	U	0.0053		0.00013	U	0.018		0.00014	U	0.00018	U	0.00014	U	0.00014	U	0.00014	U	0.00013	U
o-Xylene		0.00017	U	0.00022	U	0.00018	U	0.00049	J	0.00017	U	0.0002	U	0.00017	U	0.00022	U	0.00017	U	0.00018	U	0.00017	U	0.00017	U
p/m-Xylene		0.00025	J	0.00026	U	0.00024	J	0.0011	J	0.00019	U	0.00024	U	0.0002	U	0.00025	U	0.0002	U	0.0002	U	0.00019	U	0.00019	U
Toluene	0.7	0.00021	J	0.00025	U	0.0002	U	0.0025		0.00019	U	0.00023	U	0.0002	U	0.00025	U	0.0002	U	0.0002	U	0.00019	U	0.00019	U
Xylenes, Total	0.26	0.00025	J	0.00022	U	0.00024	J	0.0016	J	0.00017	U	0.0002	U	0.00017	U	0.00022	U	0.00017	U	0.00018	U	0.00017	U	0.00017	U
Semi-Volatile Organic Compounds																									
2-Methylnaphthalene		0.058	U	0.068	U	0.058	U	0.06	U	0.054	U	0.22		0.057	U	0.058	U	0.055	U	0.059	U	0.056	U	0.06	U
Acenaphthene	20	0.14		0.044	U	0.037	U	0.039	U	0.035	U	0.64		0.037	U	0.17		0.036	U	0.038	U	0.036	U	0.038	U
Acenaphthylene	100	0.034	U	0.062	J	0.034	U	0.035	U	0.032	U	0.1	J	0.034	U	0.041	J	0.032	U	0.035	U	0.032	U	0.035	U
Anthracene	100	0.32		0.091	J	0.03	U	0.032	J	0.028	U	1.8		0.03	U	0.49		0.029	U	0.031	U	0.029	U	0.031	U
Benzo(a)anthracene	1	0.78		0.38		0.036	U	0.075	J	0.033	U	3.1		0.035	U	0.96		0.034	U	0.036	U	0.034	U	0.037	U
Benzo(a)pyrene	1	0.57		0.36		0.044	U	0.062	J	0.042	U	2.6		0.044	U	0.87		0.042	U	0.045	U	0.042	U	0.046	U
Benzo(b)fluoranthene	1	0.66		0.47		0.037	U	0.077	J	0.034	U	3.2		0.036	U	1.1		0.035	U	0.038	U	0.035	U	0.038	U
Benzo(ghi)perylene	100	0.34		0.2		0.038	U	0.039	U	0.035	U	1.5		0.037	U	0.6		0.036	U	0.039	U	0.036	U	0.039	U
Benzo(k)fluoranthene	0.8	0.25		0.17		0.035	U	0.036	U	0.032	U	1.1		0.034	U	0.39		0.033	U	0.035	U	0.033	U	0.036	U
Biphenyl		0.059	U	0.07	U	0.06	U	0.062	U	0.056	U	0.074	J	0.059	U	0.06	U	0.057	U	0.061	U	0.057	U	0.062	U
Butyl benzyl phthalate		0.073	J	0.042	U	0.036	U	0.037	U	0.033	U	0.036	U	0.035	U	0.035	U	0.034	U	0.036	U	0.034	U	0.036	U
Carbazole		0.1	J	0.052	J	0.039	U	0.041	U	0.036	U	0.68		0.038	U	0.2		0.037	U	0.04	U	0.037	U	0.04	U
Chrysene	1	0.79		0.41		0.036	U	0.069	J	0.033	U	3.1		0.035	U	0.93		0.034	U	0.036	U	0.034	U	0.037	U
Dibenzo(a,h)anthracene	0.33	0.069	J	0.062	J	0.035	U	0.037	U	0.033	U	0.36		0.035	U	0.13		0.034	U	0.036	U	0.034	U	0.036	U
Dibenzofuran	7	0.068	J	0.071	U	0.061	U	0.063	U	0.057	U	0.55		0.06	U	0.12	J	0.058	U	0.062	U	0.058	U	0.062	U
Fluoranthene	100	1.5		0.7		0.036	J	0.16		0.031	U	7.6	E	0.033	U	2.3		0.032	U	0.034	U	0.032	U	0.034	U
Fluorene	30	0.13	J	0.061	U	0.052	U	0.054	U	0.049	U	0.76		0.051	U	0.2		0.05	U	0.053	U	0.05	U	0.054	U
Indeno(1,2,3-cd)Pyrene	0.5	0.33		0.23		0.04	U	0.042	U	0.038	U	1.6		0.04	U	0.61		0.038	U	0.041	U	0.039	U	0.042	U
Naphthalene	12	0.06	U	0.07	U	0.06	U	0.063	U	0.056	U	0.42		0.06	U	0.085	J	0.058	U	0.062	U	0.058	U	0.062	U
Phenanthrene	100	2		0.42		0.036	U	0.15		0.033	U	7.6	E	0.035	U	2		0.034	U	0.036	U	0.034	U	0.036	U
Pyrene	100	1.8		0.62		0.035	U	0.14		0.033	U	7.2		0.035	U	2		0.034	U	0.036	U	0.034	U	0.036	U

Notes: Shaded = exceeds criteria J = estimated value near reporting limit U = not detected [a] NYSDEC Technical Operational Guidance Series Unrestricted Use Soil Cleanup Objectives

ATTACHMENT C

LABORATORY REPORT

ANALYTICAL REPORT

Lab Number:	L1504886
Client:	Integral Consulting, Inc. 61 Broadway Suite 1601 New York, NY 10006-2756
ATTN:	James L'Esperance
Phone:	(212) 962-4301
Project Name:	1010 PACIFIC ST.
Project Number:	E090
Report Date:	03/27/15

The original project report/data package is held by Alpha Analytical. This report/data package is paginated and should be reproduced only in its entirety. Alpha Analytical holds no responsibility for results and/or data that are not consistent with the original.

Certifications & Approvals: MA (M-MA086), NY (11148), CT (PH-0574), NH (2003), NJ NELAP (MA935), RI (LAO00065), ME (MA00086), PA (68-03671), VA (460195), MD (348), IL (200077), NC (666), TX (T104704476), DOD (L2217), USDA (Permit #P-330-11-00240).

Eight Walkup Drive, Westborough, MA 01581-1019
508-898-9220 (Fax) 508-898-9193 800-624-9220 - www.alphalab.com

Project Name: 1010 PACIFIC ST.
Project Number: E090

Lab Number: L1504886
Report Date: 03/27/15

Alpha Sample ID	Client ID	Matrix	Sample Location	Collection Date/Time	Receive Date
L1504886-01	SB-01 (1.5-2 FTB-SLAB)	SOIL	1010 PACIFIC ST., NYC	03/14/15 14:00	03/14/15
L1504886-02	SB-02 (5-10 FTBG)	SOIL	1010 PACIFIC ST., NYC	03/14/15 10:20	03/14/15
L1504886-03	SB-02 (18-20 FTBG)	SOIL	1010 PACIFIC ST., NYC	03/14/15 10:26	03/14/15
L1504886-04	SB-03 (5-10 FTBG)	SOIL	1010 PACIFIC ST., NYC	03/14/15 10:00	03/14/15
L1504886-05	SB-03 (18-20 FTBG)	SOIL	1010 PACIFIC ST., NYC	03/14/15 10:00	03/14/15
L1504886-06	SB-04 (5-10 FTBG)	SOIL	1010 PACIFIC ST., NYC	03/14/15 08:45	03/14/15
L1504886-07	SB-04 (17-19 FTBG)	SOIL	1010 PACIFIC ST., NYC	03/14/15 08:45	03/14/15
L1504886-08	SB-05 (5-10 FTBG)	SOIL	1010 PACIFIC ST., NYC	03/14/15 09:10	03/14/15
L1504886-09	SB-05 (18-20 FTBG)	SOIL	1010 PACIFIC ST., NYC	03/14/15 09:10	03/14/15
L1504886-10	SB-07 (3-5 FTBG)	SOIL	1010 PACIFIC ST., NYC	03/14/15 11:20	03/14/15
L1504886-11	SB-07 (18-20 FTBG)	SOIL	1010 PACIFIC ST., NYC	03/14/15 11:20	03/14/15
L1504886-12	DUPLICATE	SOIL	1010 PACIFIC ST., NYC	03/14/15 00:00	03/14/15
L1504886-13	FIELD BLANK	WATER	1010 PACIFIC ST., NYC	03/14/15 14:00	03/14/15
L1504886-14	TRIP BLANK	WATER	1010 PACIFIC ST., NYC	03/14/15 00:00	03/14/15

Project Name: 1010 PACIFIC ST. **Lab Number:** L1504886
Project Number: E090 **Report Date:** 03/27/15

Case Narrative

The samples were received in accordance with the Chain of Custody and no significant deviations were encountered during the preparation or analysis unless otherwise noted. Sample Receipt, Container Information, and the Chain of Custody are located at the back of the report.

Results contained within this report relate only to the samples submitted under this Alpha Lab Number and meet all of the requirements of NELAC, for all NELAC accredited parameters. The data presented in this report is organized by parameter (i.e. VOC, SVOC, etc.). Sample specific Quality Control data (i.e. Surrogate Spike Recovery) is reported at the end of the target analyte list for each individual sample, followed by the Laboratory Batch Quality Control at the end of each parameter. If a sample was re-analyzed or re-extracted due to a required quality control corrective action and if both sets of data are reported, the Laboratory ID of the re-analysis or re-extraction is designated with an "R" or "RE", respectively. When multiple Batch Quality Control elements are reported (e.g. more than one LCS), the associated samples for each element are noted in the grey shaded header line of each data table. Any Laboratory Batch, Sample Specific % recovery or RPD value that is outside the listed Acceptance Criteria is bolded in the report. All specific QC information is also incorporated in the Data Usability format of our Data Merger tool where it can be reviewed along with any associated usability implications. Soil/sediments, solids and tissues are reported on a dry weight basis unless otherwise noted. Definitions of all data qualifiers and acronyms used in this report are provided in the Glossary located at the back of the report.

In reference to questions H (CAM) or 4 (RCP) when "NO" is checked, the performance criteria for CAM and RCP methods allow for some quality control failures to occur and still be within method compliance. In these instances the specific failure is not narrated but noted in the associated QC table. The information is also incorporated in the Data Usability format of our Data Merger tool where it can be reviewed along with any associated usability implications.

Please see the associated ADEx data file for a comparison of laboratory reporting limits that were achieved with the regulatory Numerical Standards requested on the Chain of Custody.

HOLD POLICY
For samples submitted on hold, Alpha's policy is to hold samples (with the exception of Air canisters) free of charge for 21 calendar days from the date the project is completed. After 21 calendar days, we will dispose of all samples submitted including those put on hold unless you have contacted your Client Service Representative and made arrangements for Alpha to continue to hold the samples. Air canisters will be disposed after 3 business days from the date the project is completed.

Please contact Client Services at 800-624-9220 with any questions.

Project Name: 1010 PACIFIC ST. **Lab Number:** L1504886
Project Number: E090 **Report Date:** 03/27/15

Case Narrative (continued)

Report Submission

This report replaces the report issued March 22, 2015. The client ID on sample L1504886-10 has been amended, at the client's request.

All non-detect (ND) or estimated concentrations (J-qualified) have been quantitated to the limit noted in the MDL column.

Volatile Organics

L1504886-08: The surrogate recovery is below the acceptance criteria for dibromofluoromethane (35%), due to a known matrix effect caused by the high pH of the sample (>10).

Semivolatile Organics

The surrogate recoveries for L1504886-08 were outside the acceptance criteria for 2-fluorophenol (2%) and 2,4,6-tribromophenol (2%); however, re-extraction achieved similar results 2-fluorophenol (1%), phenol-d6 (8%), and 2,4,6-tribromophenol (1%). The results of both extractions are reported.

Total Metals

L1504886-01 through -12 have elevated detection limits for all elements, with the exception of mercury, due to the dilutions required by matrix interferences encountered during analysis.

The WG768636-1 Method Blank, associated with L1504886-13, has a concentration above the reporting limit for arsenic. Since the sample was non-detect for this target analyte, no further actions were taken. The results of the original analysis are reported.

The WG768743-4 MS recoveries for aluminum (419%) and iron (1200%), performed on L1504886-11, do not apply because the sample concentrations are greater than four times the spike amounts added.

The WG768743-4 MS recovery, performed on L1504886-11, is outside the acceptance criteria for potassium (72%). A post digestion spike was performed and yielded an unacceptable recovery of 72%. This has been attributed to sample matrix.

The WG768743-3 Laboratory Duplicate RPD, performed on L1504886-11, is outside the acceptance criteria

Project Name:	1010 PACIFIC ST.	**Lab Number:**	L1504886
Project Number:	E090	**Report Date:**	03/27/15

Case Narrative (continued)

for chromium (21%). The elevated RPD has been attributed to the non-homogeneous nature of the sample utilized for the laboratory duplicate.

I, the undersigned, attest under the pains and penalties of perjury that, to the best of my knowledge and belief and based upon my personal inquiry of those responsible for providing the information contained in this analytical report, such information is accurate and complete. This certificate of analysis is not complete unless this page accompanies any and all pages of this report.

Authorized Signature: 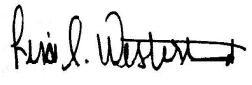 Lisa Westerlind

Title: Technical Director/Representative Date: 03/27/15

Appendix E:
R**evised CE**QR **EAS Short Form and Negative Declaration**

City Environmental Quality Review
ENVIRONMENTAL ASSESSMENT STATEMENT (EAS) SHORT FORM

FOR UNLISTED ACTIONS ONLY • *Please fill out and submit to the appropriate agency* (see instructions)

Part I: GENERAL INFORMATION

1. *Does the Action Exceed Any Type I Threshold in 6 NYCRR Part 617.4 or 43 RCNY §6-15(A) (Executive Order 91 of 1977, as amended)?* ☐ YES ☒ NO

If "yes," **STOP** and **complete the FULL EAS FORM**.

2. *Project Name* 1010 Pacific Street Rezoning

3. *Reference Numbers*

CEQR REFERENCE NUMBER (to be assigned by lead agency)	BSA REFERENCE NUMBER (if applicable)
16DCP134K	
ULURP REFERENCE NUMBER (if applicable)	OTHER REFERENCE NUMBER(S) (if applicable) (*e.g.*, legislative intro, CAPA)
180042ZMK, N180043ZRK	

4a. *Lead Agency Information*			**4b. *Applicant Information***		
NAME OF LEAD AGENCY			NAME OF APPLICANT		
New York City Department of City Planning			1010 Pacific Street LLC		
NAME OF LEAD AGENCY CONTACT PERSON			NAME OF APPLICANT'S REPRESENTATIVE OR CONTACT PERSON		
Olga Abinader			Richard Lobel		
ADDRESS 120 Broadway, 31st Floor			ADDRESS 18 East 41st Street		
CITY New York	STATE NY	ZIP 10271	CITY New York	STATE NY	ZIP 10017
TELEPHONE (212) 720 3493	EMAIL oabinad@planning.nyc.gov		TELEPHONE (212) 725-2727	EMAIL rlobel@sheldonlobelpc.com	

5. *Project Description*

The Applicant, 1010 Pacific Street LLC, seeks a zoning map amendment to rezone portions of Brooklyn Block 1133 from an M1-1 District to an R7A/C1-4 District, to facilitate the construction of a mixed residential, commercial, and community facility building at 1010 Pacific Street (Block 1133, Lots 32 and 42). The proposed development is anticipated to have a build year of 2023. The Applicant is also proposing a zoning text amendment to establish the rezoning area as a Mandatory Inclusionary Housing ("MIH") area mapped with MIH Option 1 and 2. The Applicant has selected MIH Option 1 to allocate 25 percent of the dwelling units in the proposed development as permanently affordable units at or below 60 percent of the Area Median Income ("AMI") with ten percent at or below 40 percent AMI.

Project Location

BOROUGH Brooklyn	COMMUNITY DISTRICT(S) 8	STREET ADDRESS 1010 Pacific Street
TAX BLOCK(S) AND LOT(S) Development site: Block 1133, Lots 32 and 42 Rezoning Area: Block 1133, Lots 32, 42, 43-49, and 51-53		ZIP CODE 11238
DESCRIPTION OF PROPERTY BY BOUNDING OR CROSS STREETS The rezoning area is a portion of the block bounded by Dean Street to the south, Grand Avenue to the west, Pacific Street to the north and Classon Avenue to the east.		
EXISTING ZONING DISTRICT, INCLUDING SPECIAL ZONING DISTRICT DESIGNATION, IF ANY M1-1		ZONING SECTIONAL MAP NUMBER 16c

6. *Required Actions or Approvals* (check all that apply)

***City Planning Commission*:** ☒ YES ☐ NO ☒ UNIFORM LAND USE REVIEW PROCEDURE (ULURP)

☐ CITY MAP AMENDMENT	☐ ZONING CERTIFICATION	☐ CONCESSION
☒ ZONING MAP AMENDMENT	☐ ZONING AUTHORIZATION	☐ UDAAP
☒ ZONING TEXT AMENDMENT	☐ ACQUISITION—REAL PROPERTY	☐ REVOCABLE CONSENT
☐ SITE SELECTION—PUBLIC FACILITY	☐ DISPOSITION—REAL PROPERTY	☐ FRANCHISE
☐ HOUSING PLAN & PROJECT	☐ OTHER, explain:	

☐ SPECIAL PERMIT (if appropriate, specify type: ☐ modification; ☐ renewal; ☐ other); EXPIRATION DATE:

SPECIFY AFFECTED SECTIONS OF THE ZONING RESOLUTION

***Board of Standards and Appeals*:** ☐ YES ☒ NO

☐ VARIANCE (use)

☐ VARIANCE (bulk)
☐ SPECIAL PERMIT (if appropriate, specify type: ☐ modification; ☐ renewal; ☐ other); EXPIRATION DATE:
SPECIFY AFFECTED SECTIONS OF THE ZONING RESOLUTION

***Department of Environmental Protection*:** ☐ YES ☒ NO If "yes," specify:

Other City Approvals Subject to CEQR (check all that apply)

☐ LEGISLATION
☐ RULEMAKING
☐ CONSTRUCTION OF PUBLIC FACILITIES
☐ 384(b)(4) APPROVAL
☐ OTHER, explain:
☐ FUNDING OF CONSTRUCTION, specify:
☐ POLICY OR PLAN, specify:
☐ FUNDING OF PROGRAMS, specify:
☐ PERMITS, specify:

Other City Approvals Not Subject to CEQR (check all that apply)

☐ PERMITS FROM DOT'S OFFICE OF CONSTRUCTION MITIGATION AND COORDINATION (OCMC)
☐ LANDMARKS PRESERVATION COMMISSION APPROVAL
☐ OTHER, explain:

***State or Federal Actions/Approvals/Funding*:** ☐ YES ☒ NO If "yes," specify:

7. *Site Description:* *The directly affected area consists of the project site and the area subject to any change in regulatory controls. Except where otherwise indicated, provide the following information with regard to the directly affected area.*

***Graphics*:** *The following graphics must be attached and each box must be checked off before the EAS is complete. Each map must clearly depict the boundaries of the directly affected area or areas and indicate a 400-foot radius drawn from the outer boundaries of the project site. Maps may not exceed 11 x 17 inches in size and, for paper filings, must be folded to 8.5 x 11 inches.*

☒ SITE LOCATION MAP ☒ ZONING MAP ☒ SANBORN OR OTHER LAND USE MAP
☒ TAX MAP ☐ FOR LARGE AREAS OR MULTIPLE SITES, A GIS SHAPE FILE THAT DEFINES THE PROJECT SITE(S)
☒ PHOTOGRAPHS OF THE PROJECT SITE TAKEN WITHIN 6 MONTHS OF EAS SUBMISSION AND KEYED TO THE SITE LOCATION MAP

Physical Setting (both developed and undeveloped areas)

Total directly affected area (sq. ft.): 48,399
Waterbody area (sq. ft) and type: N/A
Roads, buildings, and other paved surfaces (sq. ft.): 48,399
Other, describe (sq. ft.): N/A

8. *Physical Dimensions and Scale of Project* (if the project affects multiple sites, provide the total development facilitated by the action)

SIZE OF PROJECT TO BE DEVELOPED (gross square feet): 180,989 gsf (Projected Sites 1-4)
NUMBER OF BUILDINGS: 4
GROSS FLOOR AREA OF EACH BUILDING (sq. ft.): approx. 130,897 gsf (Project Site 1), 13,915 gsf (Project Site 2), 19,683 gsf (Project Site 3), 16,495 gsf, (Project Site 4)
HEIGHT OF EACH BUILDING (ft.): 95 Feet
NUMBER OF STORIES OF EACH BUILDING: 9

Does the proposed project involve changes in zoning on one or more sites? ☒ YES ☐ NO
If "yes," specify: The total square feet owned or controlled by the applicant: 25,
The total square feet non-applicant owned area: N/A (Question 8 responses are based on the proposed develoment, not the Reasonable Worst Case Development Secnario for the Future With-Action Condition)

Does the proposed project involve in-ground excavation or subsurface disturbance, including, but not limited to foundation work, pilings, utility lines, or grading? ☒ YES ☐ NO
If "yes," indicate the estimated area and volume dimensions of subsurface permanent and temporary disturbance (if known):
AREA OF TEMPORARY DISTURBANCE: approx. 35,768 sq. ft. (width x length) VOLUME OF DISTURBANCE: TBD cubic ft. (width x length x depth)
AREA OF PERMANENT DISTURBANCE: approx. 35,768 sq. ft. (width x length)

Description of Proposed Uses (please complete the following information as appropriate)

	Residential	***Commercial***	***Community Facility***	***Industrial/Manufacturing***
Size (in gross sq. ft.)	approx. 141,644	approx. 39,345		
Type (*e.g.,* retail, office, school)	166 units	Local retail		

Does the proposed project increase the population of residents and/or on-side workers? ☒ YES ☐ NO
If "yes," please specify: NUMBER OF ADDITIONAL RESIDENTS: 353 NUMBER OF ADDITIONAL WORKERS: 46
Provide a brief explanation of how these numbers were determined: Residents - Avg. household size in nearby Census Tracts; Workers - standard industry rates (1 residential employee per 25 dwelling units, 3 employees per 1,000 sf of retail use,

Does the proposed project create new open space? ☐ YES ☒ NO If "yes," specify size of project-created open space: sq. ft.
Has a No-Action scenario been defined for this project that differs from the existing condition? ☐ YES ☒ NO If "yes," see Chapter 2, "Establishing the Analysis Framework" and describe briefly:
9. *Analysis Year* CEQR Technical Manual Chapter 2
ANTICIPATED BUILD YEAR (date the project would be completed and operational): 2023
ANTICIPATED PERIOD OF CONSTRUCTION IN MONTHS: 16 to 20 (for each projected development site)
WOULD THE PROJECT BE IMPLEMENTED IN A SINGLE PHASE? ☒ YES ☐ NO | IF MULTIPLE PHASES, HOW MANY?
BRIEFLY DESCRIBE PHASES AND CONSTRUCTION SCHEDULE:
10. *Predominant Land Use in the Vicinity of the Project* (check all that apply) ☒ RESIDENTIAL ☒ MANUFACTURING ☒ COMMERCIAL ☐ PARK/FOREST/OPEN SPACE ☒ OTHER, specify: Transportation/utility

Part II: TECHNICAL ANALYSIS

INSTRUCTIONS: For each of the analysis categories listed in this section, assess the proposed project's impacts based on the thresholds and criteria presented in the CEQR Technical Manual. Check each box that applies.

- If the proposed project can be demonstrated not to meet or exceed the threshold, check the "no" box.
- If the proposed project will meet or exceed the threshold, or if this cannot be determined, check the "yes" box.
- For each "yes" response, provide additional analyses (and attach supporting information, if needed) based on guidance in the CEQR Technical Manual to determine whether the potential for significant impacts exists. Please note that a "yes" answer does not mean that an EIS must be prepared—it means that more information may be required for the lead agency to make a determination of significance.
- The lead agency, upon reviewing Part II, may require an applicant to provide additional information to support the Short EAS Form. For example, if a question is answered "no," an agency may request a short explanation for this response.

	YES	NO
1. *LAND USE, ZONING, AND PUBLIC POLICY*: CEQR Technical Manual Chapter 4		
(a) Would the proposed project result in a change in land use different from surrounding land uses?	☐	☒
(b) Would the proposed project result in a change in zoning different from surrounding zoning?	☒	☐
(c) Is there the potential to affect an applicable public policy?	☐	☒
(d) If "yes," to (a), (b), and/or (c), complete a preliminary assessment and attach.		
(e) Is the project a large, publicly sponsored project?	☐	☒
○ If "yes," complete a PlaNYC assessment and attach.		
(f) Is any part of the directly affected area within the City's Waterfront Revitalization Program boundaries?	☐	☒
○ If "yes," complete the Consistency Assessment Form.		
2. *SOCIOECONOMIC CONDITIONS*: CEQR Technical Manual Chapter 5		
(a) Would the proposed project:		
○ Generate a net increase of 200 or more residential units?	☐	☒
○ Generate a net increase of 200,000 or more square feet of commercial space?	☐	☒
○ Directly displace more than 500 residents?	☐	☒
○ Directly displace more than 100 employees?	☐	☒
○ Affect conditions in a specific industry?	☐	☒
3. *COMMUNITY FACILITIES*: CEQR Technical Manual Chapter 6		
(a) Direct Effects		
○ Would the project directly eliminate, displace, or alter public or publicly funded community facilities such as educational facilities, libraries, hospitals and other health care facilities, day care centers, police stations, or fire stations?	☐	☒
(b) Indirect Effects		
○ **Child Care Centers:** Would the project result in 20 or more eligible children under age 6, based on the number of low or low/moderate income residential units? (See Table 6-1 in Chapter 6)	☐	☒
○ **Libraries:** Would the project result in a 5 percent or more increase in the ratio of residential units to library branches? (See Table 6-1 in Chapter 6)	☐	☒
○ **Public Schools:** Would the project result in 50 or more elementary or middle school students, or 150 or more high school students based on number of residential units? (See Table 6-1 in Chapter 6)	☒	☐
○ **Health Care Facilities and Fire/Police Protection:** Would the project result in the introduction of a sizeable new neighborhood?	☐	☒
4. *OPEN SPACE*: CEQR Technical Manual Chapter 7		
(a) Would the proposed project change or eliminate existing open space?	☐	☒
(b) Is the project located within an under-served area in the Bronx, Brooklyn, Manhattan, Queens, or Staten Island?	☒	☐
○ If "yes," would the proposed project generate more than 50 additional residents or 125 additional employees?	☒	☐
(c) Is the project located within a well-served area in the Bronx, Brooklyn, Manhattan, Queens, or Staten Island?	☐	☒
○ If "yes," would the proposed project generate more than 350 additional residents or 750 additional employees?	☐	☐
(d) If the project in located an area that is neither under-served nor well-served, would it generate more than 200 additional	☐	☐

	YES	NO
residents or 500 additional employees?		
5. *SHADOWS*: CEQR Technical Manual Chapter 8		
(a) Would the proposed project result in a net height increase of any structure of 50 feet or more?	☒	☐
(b) Would the proposed project result in any increase in structure height and be located adjacent to or across the street from a sunlight-sensitive resource?	☐	☒
6. *HISTORIC AND CULTURAL RESOURCES*: CEQR Technical Manual Chapter 9		
(a) Does the proposed project site or an adjacent site contain any architectural and/or archaeological resource that is eligible for or has been designated (or is calendared for consideration) as a New York City Landmark, Interior Landmark or Scenic Landmark; that is listed or eligible for listing on the New York State or National Register of Historic Places; or that is within a designated or eligible New York City, New York State or National Register Historic District? (See the GIS System for Archaeology and National Register to confirm)	☐	☒
(b) Would the proposed project involve construction resulting in in-ground disturbance to an area not previously excavated?	☒	☐
(c) If "yes" to either of the above, list any identified architectural and/or archaeological resources and attach supporting information on whether the proposed project would potentially affect any architectural or archeological resources.		
7. *URBAN DESIGN AND VISUAL RESOURCES*: CEQR Technical Manual Chapter 10		
(a) Would the proposed project introduce a new building, a new building height, or result in any substantial physical alteration to the streetscape or public space in the vicinity of the proposed project that is not currently allowed by existing zoning?	☒	☐
(b) Would the proposed project result in obstruction of publicly accessible views to visual resources not currently allowed by existing zoning?	☐	☒
8. *NATURAL RESOURCES*: CEQR Technical Manual Chapter 11		
(a) Does the proposed project site or a site adjacent to the project contain natural resources as defined in Section 100 of Chapter 11?	☐	☒
○ If "yes," list the resources and attach supporting information on whether the proposed project would affect any of these resources.		
(b) Is any part of the directly affected area within the Jamaica Bay Watershed?	☐	☒
○ If "yes," complete the Jamaica Bay Watershed Form, and submit according to its instructions.		
9. *HAZARDOUS MATERIALS*: CEQR Technical Manual Chapter 12		
(a) Would the proposed project allow commercial or residential uses in an area that is currently, or was historically, a manufacturing area that involved hazardous materials?	☒	☐
(b) Does the proposed project site have existing institutional controls (*e.g.*, (E) designation or Restrictive Declaration) relating to hazardous materials that preclude the potential for significant adverse impacts?	☐	☒
(c) Would the project require soil disturbance in a manufacturing area or any development on or near a manufacturing area or existing/historic facilities listed in Appendix 1 (including nonconforming uses)?	☐	☒
(d) Would the project result in the development of a site where there is reason to suspect the presence of hazardous materials, contamination, illegal dumping or fill, or fill material of unknown origin?	☐	☒
(e) Would the project result in development on or near a site that has or had underground and/or aboveground storage tanks (*e.g.*, gas stations, oil storage facilities, heating oil storage)?	☐	☒
(f) Would the project result in renovation of interior existing space on a site with the potential for compromised air quality; vapor intrusion from either on-site or off-site sources; or the presence of asbestos, PCBs, mercury or lead-based paint?	☐	☒
(g) Would the project result in development on or near a site with potential hazardous materials issues such as government-listed voluntary cleanup/brownfield site, current or former power generation/transmission facilities, coal gasification or gas storage sites, railroad tracks or rights-of-way, or municipal incinerators?	☐	☒
(h) Has a Phase I Environmental Site Assessment been performed for the site?	☒	☐
○ If "yes," were Recognized Environmental Conditions (RECs) identified? Briefly identify: UST, historical industrial and gasoline use, presence of cellar boiler requiring fuel storage (see attached report for details)	☒	☐
10. *WATER AND SEWER INFRASTRUCTURE*: CEQR Technical Manual Chapter 13		
(a) Would the project result in water demand of more than one million gallons per day?	☐	☒
(b) If the proposed project located in a combined sewer area, would it result in at least 1,000 residential units or 250,000 square feet or more of commercial space in Manhattan, or at least 400 residential units or 150,000 square feet or more of commercial space in the Bronx, Brooklyn, Staten Island, or Queens?	☐	☒
(c) If the proposed project located in a separately sewered area, would it result in the same or greater development than the amounts listed in Table 13-1 in Chapter 13?	☐	☒
(d) Would the proposed project involve development on a site that is 5 acres or larger where the amount of impervious surface would increase?	☐	☒
(e) If the project is located within the Jamaica Bay Watershed or in certain specific drainage areas, including Bronx River, Coney	☐	☒

	YES	NO
Island Creek, Flushing Bay and Creek, Gowanus Canal, Hutchinson River, Newtown Creek, or Westchester Creek, would it involve development on a site that is 1 acre or larger where the amount of impervious surface would increase?		
(f) Would the proposed project be located in an area that is partially sewered or currently unsewered?	☐	☒
(g) Is the project proposing an industrial facility or activity that would contribute industrial discharges to a Wastewater Treatment Plant and/or generate contaminated stormwater in a separate storm sewer system?	☐	☒
(h) Would the project involve construction of a new stormwater outfall that requires federal and/or state permits?	☐	☒
11. *SOLID WASTE AND SANITATION SERVICES*: CEQR Technical Manual Chapter 14		
(a) Using Table 14-1 in Chapter 14, the project's projected operational solid waste generation is estimated to be (pounds per week): 15,448		
○ Would the proposed project have the potential to generate 100,000 pounds (50 tons) or more of solid waste per week?	☐	☒
(b) Would the proposed project involve a reduction in capacity at a solid waste management facility used for refuse or recyclables generated within the City?	☐	☒
12. *ENERGY*: CEQR Technical Manual Chapter 15		
(a) Using energy modeling or Table 15-1 in Chapter 15, the project's projected energy use is estimated to be (annual BTUs): 30,600,565,800 Million BTUs		
(b) Would the proposed project affect the transmission or generation of energy?	☐	☒
13. *TRANSPORTATION*: CEQR Technical Manual Chapter 16		
(a) Would the proposed project exceed any threshold identified in Table 16-1 in Chapter 16?	☒	☐
(b) If "yes," conduct the screening analyses, attach appropriate back up data as needed for each stage and answer the following questions:		
○ Would the proposed project result in 50 or more Passenger Car Equivalents (PCEs) per project peak hour?	☐	☒
If "yes," would the proposed project result in 50 or more vehicle trips per project peak hour at any given intersection? ***It should be noted that the lead agency may require further analysis of intersections of concern even when a project generates fewer than 50 vehicles in the peak hour. See Subsection 313 of Chapter 16 for more information.*	☐	☐
○ Would the proposed project result in more than 200 subway/rail or bus trips per project peak hour?	☐	☒
If "yes," would the proposed project result, per project peak hour, in 50 or more bus trips on a single line (in one direction) or 200 subway trips per station or line?	☐	☐
○ Would the proposed project result in more than 200 pedestrian trips per project peak hour?	☒	☐
If "yes," would the proposed project result in more than 200 pedestrian trips per project peak hour to any given pedestrian or transit element, crosswalk, subway stair, or bus stop?	☒	☐
14. *AIR QUALITY*: CEQR Technical Manual Chapter 17		
(a) *Mobile Sources*: Would the proposed project result in the conditions outlined in Section 210 in Chapter 17?	☐	☒
(b) *Stationary Sources*: Would the proposed project result in the conditions outlined in Section 220 in Chapter 17?	☒	☐
○ If "yes," would the proposed project exceed the thresholds in Figure 17-3, Stationary Source Screen Graph in Chapter 17? (Attach graph as needed)	☐	☒
(c) Does the proposed project involve multiple buildings on the project site?	☒	☐
(d) Does the proposed project require federal approvals, support, licensing, or permits subject to conformity requirements?	☐	☒
(e) Does the proposed project site have existing institutional controls (*e.g.*, (E) designation or Restrictive Declaration) relating to air quality that preclude the potential for significant adverse impacts?	☐	☒
15. *GREENHOUSE GAS EMISSIONS*: CEQR Technical Manual Chapter 18		
(a) Is the proposed project a city capital project or a power generation plant?	☐	☒
(b) Would the proposed project fundamentally change the City's solid waste management system?	☐	☒
(c) If "yes" to any of the above, would the project require a GHG emissions assessment based on the guidance in Chapter 18?	☐	☐
16. *NOISE*: CEQR Technical Manual Chapter 19		
(a) Would the proposed project generate or reroute vehicular traffic?	☒	☐
(b) Would the proposed project introduce new or additional receptors (see Section 124 in Chapter 19) near heavily trafficked roadways, within one horizontal mile of an existing or proposed flight path, or within 1,500 feet of an existing or proposed rail line with a direct line of site to that rail line?	☒	☐
(c) Would the proposed project cause a stationary noise source to operate within 1,500 feet of a receptor with a direct line of sight to that receptor or introduce receptors into an area with high ambient stationary noise?	☐	☒
(d) Does the proposed project site have existing institutional controls (*e.g.*, (E) designation or Restrictive Declaration) relating to noise that preclude the potential for significant adverse impacts?	☐	☒

	YES	NO
17. *PUBLIC HEALTH*: CEQR Technical Manual Chapter 20		
(a) Based upon the analyses conducted, do any of the following technical areas require a detailed analysis: Air Quality; Hazardous Materials; Noise?	☐	☒
(b) If "yes," explain why an assessment of public health is or is not warranted based on the guidance in Chapter 20, "Public Health." Attach a preliminary analysis, if necessary.		
18. *NEIGHBORHOOD CHARACTER*: CEQR Technical Manual Chapter 21		
(a) Based upon the analyses conducted, do any of the following technical areas require a detailed analysis: Land Use, Zoning, and Public Policy; Socioeconomic Conditions; Open Space; Historic and Cultural Resources; Urban Design and Visual Resources; Shadows; Transportation; Noise?	☐	☒
(b) If "yes," explain why an assessment of neighborhood character is or is not warranted based on the guidance in Chapter 21, "Neighborhood Character." Attach a preliminary analysis, if necessary. Although no detailed analysis was required in the neighborhood character assessment a brief description of neighborhood character is included in the Supplemental Studies to the EAS report.		
19. *CONSTRUCTION*: CEQR Technical Manual Chapter 22		
(a) Would the project's construction activities involve:		
○ Construction activities lasting longer than two years?	☐	☒
○ Construction activities within a Central Business District or along an arterial highway or major thoroughfare?	☐	☒
○ Closing, narrowing, or otherwise impeding traffic, transit, or pedestrian elements (roadways, parking spaces, bicycle routes, sidewalks, crosswalks, corners, *etc.*)?	☒	☐
○ Construction of multiple buildings where there is a potential for on-site receptors on buildings completed before the final build-out?	☐	☒
○ The operation of several pieces of diesel equipment in a single location at peak construction?	☐	☒
○ Closure of a community facility or disruption in its services?	☐	☒
○ Activities within 400 feet of a historic or cultural resource?	☐	☒
○ Disturbance of a site containing or adjacent to a site containing natural resources?	☐	☒
○ Construction on multiple development sites in the same geographic area, such that there is the potential for several construction timelines to overlap or last for more than two years overall?	☐	☒
(b) If any boxes are checked "yes," explain why a preliminary construction assessment is or is not warranted based on the guidance in Chapter 22, "Construction." It should be noted that the nature and extent of any commitment to use the Best Available Technology for construction equipment or Best Management Practices for construction activities should be considered when making this determination. See attached Supplemental Studies report.		

20. *APPLICANT'S CERTIFICATION*

I swear or affirm under oath and subject to the penalties for perjury that the information provided in this Environmental Assessment Statement (EAS) is true and accurate to the best of my knowledge and belief, based upon my personal knowledge and familiarity with the information described herein and after examination of the pertinent books and records and/or after inquiry of persons who have personal knowledge of such information or who have examined pertinent books and records.

Still under oath, I further swear or affirm that I make this statement in my capacity as the applicant or representative of the entity that seeks the permits, approvals, funding, or other governmental action(s) described in this EAS.

APPLICANT/REPRESENTATIVE NAME	DATE
Max Meltzer	April 5th, 2019

SIGNATURE 

PLEASE NOTE THAT APPLICANTS MAY BE REQUIRED TO SUBSTANTIATE RESPONSES IN THIS FORM AT THE DISCRETION OF THE LEAD AGENCY SO THAT IT MAY SUPPORT ITS DETERMINATION OF SIGNIFICANCE.

Part III: DETERMINATION OF SIGNIFICANCE (To Be Completed by Lead Agency)

INSTRUCTIONS: In completing Part III, the lead agency should consult 6 NYCRR 617.7 and 43 RCNY § 6-06 (Executive Order 91 or 1977, as amended), which contain the State and City criteria for determining significance.

1. For each of the impact categories listed below, consider whether the project may have a significant adverse effect on the environment, taking into account its (a) location; (b) probability of occurring; (c) duration; (d) irreversibility; (e) geographic scope; and (f) magnitude.

IMPACT CATEGORY	Potentially Significant Adverse Impact: YES	NO
Land Use, Zoning, and Public Policy	☐	☒
Socioeconomic Conditions	☐	☒
Community Facilities and Services	☐	☒
Open Space	☐	☒
Shadows	☐	☒
Historic and Cultural Resources	☐	☒
Urban Design/Visual Resources	☐	☒
Natural Resources	☐	☒
Hazardous Materials	☐	☒
Water and Sewer Infrastructure	☐	☒
Solid Waste and Sanitation Services	☐	☒
Energy	☐	☒
Transportation	☐	☒
Air Quality	☐	☒
Greenhouse Gas Emissions	☐	☒
Noise	☐	☒
Public Health	☐	☒
Neighborhood Character	☐	☒
Construction	☐	☒

2. Are there any aspects of the project relevant to the determination of whether the project may have a significant impact on the environment, such as combined or cumulative impacts, that were not fully covered by other responses and supporting materials? ☐ YES ☒ NO

If there are such impacts, attach an explanation stating whether, as a result of them, the project may have a significant impact on the environment.

3. Check determination to be issued by the lead agency:

☐ **Positive Declaration**: If the lead agency has determined that the project may have a significant impact on the environment, and if a Conditional Negative Declaration is not appropriate, then the lead agency issues a *Positive Declaration* and prepares a draft Scope of Work for the Environmental Impact Statement (EIS).

☐ **Conditional Negative Declaration:** A *Conditional Negative Declaration* (CND) may be appropriate if there is a private applicant for an Unlisted action AND when conditions imposed by the lead agency will modify the proposed project so that no significant adverse environmental impacts would result. The CND is prepared as a separate document and is subject to the requirements of 6 NYCRR Part 617.

☒ **Negative Declaration:** If the lead agency has determined that the project would not result in potentially significant adverse environmental impacts, then the lead agency issues a *Negative Declaration*. The *Negative Declaration* may be prepared as a separate document (see template) or using the embedded Negative Declaration on the next page.

4. ***LEAD AGENCY'S CERTIFICATION***

TITLE	LEAD AGENCY
Acting Director, Environmental Assessment and Review Division	Department of City Planning, acting on behalf of the City Planning Commission
NAME	DATE
Olga Abinader	4/5/2019

SIGNATURE Olga Abinader

REVISED NEGATIVE DECLARATION - supersedes the Negative Declaration issued October 29, 2018*

Statement of No Significant Effect

Pursuant to Executive Order 91 of 1977, as amended, and the Rules of Procedure for City Environmental Quality Review, found at Title 62, Chapter 5 of the Rules of the City of New York and 6 NYCRR, Part 617, State Environmental Quality Review, the Department of City Planning, acting on behalf of the City Planning Commission assumed the role of lead agency for the environmental review of the proposed project. Based on a review of information about the project contained in this environmental assessment statement and any attachments hereto, which are incorporated by reference herein, the lead agency has determined that the proposed project would not have a significant adverse impact on the environment.

Reasons Supporting this Determination

The above determination is based on information contained in this EAS, which finds the proposed actions sought before the City Planning Commission would have no significant effect on the quality of the environment. Reasons supporting this determination are noted below.

Hazardous Materials, Air Quality, and Noise

1. An (E) designation (E-503) for hazardous materials and air quality and has been incorporated into the proposed actions. Refer to "Determination of Significance Appendix: (E) Designation" for a list of the sites affected by the proposed (E) designation and applicable (E) designation requirements. The analyses conducted for hazardous materials and air quality conclude that with these (E) Designation requirements in place, the proposed actions would not result in significant adverse impacts to hazardous materials or air quality.

Transportation

2. The EAS includes a detailed transportation analysis of pedestrian trips generated by the proposed actions. The proposed actions do not result in an increase of more than 200 pedestrians at any intersection corner, sidewalk, or crosswalk. The analysis concludes that the proposed actions would not result in any significant adverse impacts to traffic flow, transit operations, pedestrian movement, or vehicular and pedestrian safety.

Land Use, Zoning and Public Policy

3. The EAS includes a detailed Land Use, Zoning and Public Policy section. The analysis concludes that the proposed rezoning from M1-1 to R7A/C1-4, which would facilitate the development of a new mixed use residential, commercial, and community facility building, would have no significant adverse impacts related to land use, zoning, or public policy. The proposed actions would facilitate an increase in residential density in an area characterized by diverse uses including residential, commercial, community facility, and industrial uses. The existing M1-1 zoning district contains multiple nonconforming residential buildings and is adjacent to R7A, R6A, and R6B districts and therefore would not generate new land uses that would be incompatible with existing land uses within and adjacent to the study area. The analysis concludes that no significant adverse impacts related to Land Use, Zoning and Public Policy would result from the proposed actions.

No other significant effects upon the environment that would require the preparation of a Draft Environmental Impact Statement are foreseeable. This Negative Declaration has been prepared in accordance with Article 8 of the New York State Environmental Conservation Law (SEQRA).

TITLE	LEAD AGENCY
Acting Director, Environmental Assessment and Review Division	Department of City Planning, acting on behalf of the City Planning Commission
NAME	DATE
Olga Abinader	4/5/2019
SIGNATURE	

TITLE Chair, City Planning Commission	
NAME Marisa Lago	DATE 4/10/2019
SIGNATURE	

*Following certification of the related land use application (ULURP No. 180042ZMK) on October 29, 2018, the applicant has revised the proposed rezoning from R7D/C2-4 to R7A/C2-4. This Revised Negative Declaration supersedes the Negative Declaration issued on October 29, 2018 and reflects the Revised EAS dated April 5, 2019, which assesses the change to the application. As described in the Revised EAS, the change would not alter the conclusions of the previous EAS or Negative Declaration.

Project Name: 1010 Pacific Street Rezoning
CEQR #: 16DCP134K
SEQRA Classification: Unlisted

Determination of Significance Appendix: (E) Designation (E-503)

Hazardous Materials

To ensure that the proposed actions would not result in significant adverse hazardous materials impacts, an (E) Designation (E-503) will be placed on the following sites as described below:

Projected Development Site 1 (Block 1133, Lot 32 and 42)
Projected Development Site 2 (Block 1133, Lot 45)
Projected Development Site 3 (Block 1133, Lot 48 and 49)
Projected Development Site 4 (Block 1133, Lot 51 and 52)
Potential Development Site 1 (Block 1133, Lot 46, 47, and 53)

The (E) Designation requirements for hazardous materials are as follows:

Task 1 - Sampling Protocol
The applicant submits to OER, for review and approval, a Phase 1A of the site along with a soil and groundwater testing protocol, including a description of methods and a site map with all sampling locations clearly and precisely represented.

If site sampling is necessary, no sampling should begin until written approval of a protocol is received from OER. The number and location of sample sites should be selected to adequately characterize the site, the specific source of suspected contamination (i.e., petroleum based contamination and non-petroleum based contamination), and the remainder of the site's condition. The characterization should be complete enough to determine what remediation strategy (if any) is necessary after review of sampling data. Guidelines and criteria for selecting sampling locations and collecting samples are provided by OER upon request.

Task 2 - Remediation Determination and Protocol
A written report with findings and a summary of the data must be submitted to OER after completion of the testing phase and laboratory analysis for review and approval. After receiving such results, a determination is made by OER if the results indicate that remediation is necessary. If OER determines that no remediation is necessary, written notice shall be given by OER.

If remediation is indicated from the test results, a proposed remediation plan must be submitted to OER for review and approval. The applicant must complete such remediation as determined necessary by OER. The applicant should then provide proper documentation that the work has been satisfactorily completed.

An OER-approved construction-related health and safety plan would be implemented during evacuation and construction and activities to protect workers and the community from potentially significant adverse impacts associated with contaminated soil and/or groundwater. This plan would be submitted to OER for review and approval prior to implementation.

Project Name: 1010 Pacific Street Rezoning
CEQR #: 16DCP134K
SEQRA Classification: Unlisted

Air Quality

To ensure that the proposed actions would not result in significant adverse air quality impacts, an (E) Designation (E-503) will be placed on the following sites as described below:

Projected Development Site 1 (Block 1133, Lot 32 and 42)
Projected Development Site 2 (Block 1133, Lot 45)
Projected Development Site 3 (Block 1133, Lot 48 and 49)
Projected Development Site 4 (Block 1133, Lot 51 and 52)

The (E) Designation requirements for air quality are as follows:

Any new residential/commercial development on the above-referenced property must ensure HVAC stack(s) is located at the highest tier and at least 98 feet above grade, to avoid any significant adverse air quality impacts.

Potential Development Site 1 (Block 1133, Lot 46, 47, and 53)

The (E) Designation requirements for air quality are as follows:

Any new residential/commercial development on the above-referenced property must use natural gas as the type of fuel for HVAC and hot water systems, and ensure HVAC stack(s) is located at the highest tier and at least 98 feet above grade, to avoid any significant adverse air quality impacts

Noise:

To ensure that the proposed actions would not result in significant adverse noise impacts, an (E) Designation (E-503) will be placed on the following sites as described below:

Projected Development Site 3 (Block 1133, Lot 48 and 49)
Projected Development Site 4 (Block 1133, Lot 51 and 52)
Portion of Potential Development Site 1 (Block 1133, Lot 47 and 53)

The (E) Designation requirements for noise are as follows:

In order to ensure an acceptable interior noise environment, future residential/commercial uses must provide a closed window condition with a minimum of 28 dBA window/wall attenuation in order to maintain an interior noise level of 45 dBA. In order to maintain a closed-window condition, an alternate means of ventilation must also be provided.

Appendix F:

Technical Memorandum- Revised CEQR EAS with Revised Zoning Map Amendment by the City Planning Commission

Technical Memorandum

1010 Pacific Street Street Rezoning

CEQR # 16DCP134K

ULURP No. 180042ZMK, N180043ZRK

1- Introduction

On October 29th, 2018, the New York City Department of City Planning (DCP), as lead agency, issued a Negative Declaration for the 1010 Pacific Street Rezoning Environmental Assessment Statement (EAS). The EAS considered discretionary actions proposed by 1010 Pacific Street LLC, (the "Applicant") that included a zoning map amendment that would rezone a portion of Brooklyn Block 1133 in Brooklyn Community District 8, and a related zoning text amendment to Appendix F of the New York City Zoning Resolution ("ZR") to establish the proposed R7D/C2-4 zoning district as a Mandatory Inclusionary Housing (MIH) Area subject to affordability requirements of the MIH program. The Proposed Zoning Map Amendment would change the zoning on of the northeastern portion of Block 1133, Lots 32, 42, 43, 44, 45, 46, 47, 48, 49, 51, 52 and 53 from M1-1 to R7D/C2-4.

The Proposed Actions would facilitate the development of a new eleven-story (plus cellar) mixed use residential, community facility, and commercial building at 1010 Pacific Street (Lots 32 and 42) containing 128 dwelling units.

The below text describes the Future With-Action Scenario for the Rezoning Area.

Projected Development Site 1: Block 1133 Lots 32 and 42

The Reasonable Worst Case Development Scenario (RWCDS) assumes the Applicant would build in conformance with the new Mandatory Inclusionary Housing (MIH) standards that are part of the *Housing New York* plan. The MIH standards would result in more affordable housing that is responsive to the needs of each neighborhood, with a set of income mix options that is achieved through zoning. Under this proposal, the Applicant may choose to allocate either 25 percent of the total floor area to residents with incomes averaging 60 percent of the AMI or 30 percent of the total floor area to residents with incomes averaging 80 percent of AMI. In an R7D district, a total FAR of 5.6 is allowed in Inclusionary Housing designated areas, with an increase in building height to 115 feet under MIH.

Under the With-Action Scenario, it is assumed that Block 1133, Lot 32 and 42 would be developed to the maximum FAR of 5.6. Additionally, the mapping of a C2-4 commercial overlay over the rezoning area is assumed to induce a ground-floor commercial use over Projected Development Site 1. On a 25,869 square-foot site, it is assumed that the proposed action would result in approximately 159,352 gross square feet (gsf) (144,865 zsf) of total floor area of which 130,896 gsf (118,996 zsf) would be residential

floor area (4.6 FAR) and 28,456 (25,896 zsf) of commercial floor area (1.0 FAR). It is also assumed that the building would be constructed to the maximum allowable height, which is 115 feet in an R7D district. Estimating approximately 850 square feet per dwelling unit, it is assumed that 154 residential units would be constructed on-site. Under the 30 percent MIH option, the proposed rezoning would result in the creation of approximately 46 affordable units with incomes averaging 80 percent of the AMI. Off-street parking would be required for 50 percent of market-rate dwelling units; therefore Projected Development Site 1 would provide approximately 54 parking spaces for the 108 market-rate units.

Projected Development Site 2: Block 1133 Lot 45

Under the With-Action Scenario, it is assumed that Block 1133, Lot 45 would be developed to the maximum FAR of 5.6, pursuant to MIH. Additionally, the mapping of a C2-4 commercial overlay over the rezoning area is assumed to induce a ground-floor commercial use over the projected development site. On a 2,750 square-foot lot, it is assumed that the proposed action would result in approximately 13,915 gross square feet (gsf) (12,650 zsf) of residential floor area (4.6 FAR) and 2,750 square feet of commercial floor area (1.0 FAR). It is also assumed that the building would be constructed to the maximum allowable height of115 feet. Estimating approximately 850 square feet per dwelling unit, it is assumed 16 residential units would be constructed on-site. Under the 30 percent MIH option, the proposed rezoning would result in the creation of approximately five affordable units with incomes averaging 80 percent of the AMI. Required parking for the 11 market-rate units would be waived as it is fewer than 15 spaces.

Projected Development Site 3: Block 1133 Lot 48 and 49

Under the With-Action Scenario, it is assumed that Block 1133, Lots 48 and 49 would be developed to the maximum FAR of 5.6, pursuant to MIH, as both sites are under common ownership. Additionally, the mapping of a C2-4 commercial overlay over the rezoning area is assumed to induce a ground-floor commercial use over the projected development site. On a 3,890 square-foot combined lot, it is assumed that the proposed action would result in approximately 19,683 gsf (17,894 zsf) (4.6 FAR) of residential floor area and 4,279 gsf (3,890 zsf) (1.0 FAR) of commercial floor area. It is also assumed that the building would be constructed to the maximum allowable height of 115 feet. Estimating approximately 850 square feet per dwelling unit, it is assumed 23 residential units would be constructed on-site. Under the 30 percent MIH option, the proposed rezoning would result in the creation of approximately seven affordable units with incomes averaging 60 percent of the AMI. Required parking for the 16 market-rate units would be waived as it is fewer than 15 spaces.

Projected Development Site 4: Block 1133 Lot 51 and 52

Under the With-Action Scenario, it is assumed that Block 1133, Lots 51 and 52 would be developed to the maximum FAR of 5.6, pursuant to MIH, as both sites are under common ownership. Additionally, the

mapping of a C2-4 commercial overlay over the rezoning area is assumed to induce a ground-floor commercial use over the projected development site. On a 3,260 square-foot combined lot, it is assumed that the proposed action would result in approximately16,496 gsf (14,996 zsf) (4.6 FAR) of residential floor area and 3,586 gsf (3,260 zsf) (1.0 FAR) of commercial floor area. It is also assumed that the building would be constructed to the maximum allowable height of 115 feet. Estimating approximately 850 square feet per dwelling unit, it is assumed 19 residential units would be constructed on-site. Under the 30 percent MIH option, the proposed rezoning would result in the creation of approximately six affordable units with incomes averaging 60 percent of the AMI. Required parking for the market-rate units would be waived as it is fewer than 15 spaces.

Potential Development Sites

Potential Development Site 1: Block 1133, Lot 46, 47 and 53

Under the With-Action Scenario, Block 1133, Lots 46, 47 and 53 have the potential to be developed, though the three parcels are not under common ownership and therefore less likely to be developed than the projected development sites described above. It is assumed that Block 1133, Lots 46, 47 and 53 would be developed to the maximum FAR of 5.6, pursuant to MIH. Additionally, the mapping of a C2-4 commercial overlay over the rezoning area has the potential to induce a ground-floor commercial use over the potential development site. On a 7,130 sf combined lot, the proposed action may result in approximately 36,078 gsf (32,798 zsf) (4.6 FAR) of residential floor area and 7,843 gsf (7,130 zsf) (1.0 FAR) of commercial floor area. It is also assumed that the building would be constructed to the maximum allowable height of 115 feet for an R7D district. Estimating approximately 850 square feet per dwelling unit, it is assumed that 42 residential units may be constructed on-site. Under the 30 percent MIH option, the proposed rezoning would result in the creation of approximately 13 affordable units with incomes averaging 60 percent of the AMI. Approximately 15 parking spaces would be required for the market-rate units.

In addition, the potential effects of the nearby 1050 Pacific Street Rezoning (a private application requesting a zoning map amendment to create a Mixed Use district in order to facilitate a new eight-story development with 103 dwelling units and 15,790 sf of commercial area) were considered in all density related sections of this EAS.

Modification to Proposed Actions

Since the issuance of the Negative Declaration, the New York City Planning Commission (CPC) is considering a modification to the Zoning Map Amendment from an R7D/C2-4 to R7A/C2-4. This would lower the amount of FAR that would be permitted on the Projected and Potential Development Sites within the Rezoning Area. The change in the Zoning Map Amendment would affect the Projected

Development on both Projected Development Sites 1 – 2, as well as Potential Site 1. The maximum FAR on the Projected Sites and Potential Site would be 4.6 with a maximum height of 95 feet. The Technical Memorandum describes the Proposed Actions under the City Planning Commissions' potential modification and examines whether it would result in any new or different significant adverse environmental impacts not already identified in the October 2018 EAS and Negative Declaration.

2- *Description of the Previous Proposed Actions and Reasonable Worst Case Development Scenario*

Zoning Map Amendment

The previous Zoning Map Amendment would rezone a portion of Brooklyn Block 1133, Lots 32, 42, 43, 44, 45, 46, 47, 48, 49, 51, 52 and 53 from M1-1 to R7D/C2-4.

Zoning Text Amendment

In addition to the Zoning Map Amendment, the Applicant is also requesting a Zoning Text Amendment to ZR Appendix F: Inclusionary Housing Designated Areas to establish the Rezoning Area as a Mandatory Inclusionary Housing ('MIH") Area.

As described in the October 2018 RWCDS, it is expected that the Proposed Actions would result in development slightly larger than what the applicant is proposing on Lots 32 and 42 (Projected Development Site 1) and would also result in development on Lots 45 (projected Site 2), 48, and 49 (Projected Site 3) and 51 and 52 (Projected Site 4). There is also the potential for development on Lots 46, 47 and 53.

The RWCDS for each Projected Site is below.

<u>Projected Development Site 1: Block 1133 Lots 32 and 42</u>

Under the With-Action Scenario, it is assumed that Block 1133, Lot 32 and 42 would be developed to the maximum FAR of 5.6. Additionally, the mapping of a C2-4 commercial overlay over the rezoning area is assumed to induce a ground-floor commercial use over Projected Development Site 1. On a 25,869 square-foot site, it is assumed that the proposed action would result in approximately 159,352 gross square feet (gsf) (144,865 zsf) of total floor area of which 130,896 gsf (118,996 zsf) would be residential floor area (4.6 FAR) and 28,456 (25,896 zsf) of commercial floor area (1.0 FAR). It is also assumed that the building would be constructed to the maximum allowable height, which is 115 feet in an R7D district. Estimating approximately 850 square feet per dwelling unit, it is assumed that 154 residential units would be constructed on-site. Under the 30 percent MIH option, the proposed rezoning would result in the creation of approximately 46 affordable units with incomes averaging 80 percent of the AMI. Off-street parking would be required for 50 percent of market-rate dwelling units; therefore Projected Development

Site 1 would provide approximately 54 parking spaces for the 108 market-rate units.

Projected Development Site 2: Block 1133 Lot 45

Under the With-Action Scenario, it is assumed that Block 1133, Lot 45 would be developed to the maximum FAR of 5.6, pursuant to MIH. Additionally, the mapping of a C2-4 commercial overlay over the rezoning area is assumed to induce a ground-floor commercial use over the projected development site. On a 2,750 square-foot lot, it is assumed that the proposed action would result in approximately 13,915 gross square feet (gsf) (12,650 zsf) of residential floor area (4.6 FAR) and 2,750 square feet of commercial floor area (1.0 FAR). It is also assumed that the building would be constructed to the maximum allowable height of115 feet. Estimating approximately 850 square feet per dwelling unit, it is assumed 16 residential units would be constructed on-site. Under the 30 percent MIH option, the proposed rezoning would result in the creation of approximately five affordable units with incomes averaging 80 percent of the AMI. Required parking for the 11 market-rate units would be waived as it is fewer than 15 spaces.

Projected Development Site 3: Block 1133 Lot 48 and 49

Under the With-Action Scenario, it is assumed that Block 1133, Lots 48 and 49 would be developed to the maximum FAR of 5.6, pursuant to MIH, as both sites are under common ownership. Additionally, the mapping of a C2-4 commercial overlay over the rezoning area is assumed to induce a ground-floor commercial use over the projected development site. On a 3,890 square-foot combined lot, it is assumed that the proposed action would result in approximately 19,683 gsf (17,894 zsf) (4.6 FAR) of residential floor area and 4,279 gsf (3,890 zsf) (1.0 FAR) of commercial floor area. It is also assumed that the building would be constructed to the maximum allowable height of 115 feet. Estimating approximately 850 square feet per dwelling unit, it is assumed 23 residential units would be constructed on-site. Under the 30 percent MIH option, the proposed rezoning would result in the creation of approximately seven affordable units with incomes averaging 60 percent of the AMI. Required parking for the 16 market-rate units would be waived as it is fewer than 15 spaces.

Projected Development Site 4: Block 1133 Lot 51 and 52

Under the With-Action Scenario, it is assumed that Block 1133, Lots 51 and 52 would be developed to the maximum FAR of 5.6, pursuant to MIH, as both sites are under common ownership. Additionally, the mapping of a C2-4 commercial overlay over the rezoning area is assumed to induce a ground-floor commercial use over the projected development site. On a 3,260 square-foot combined lot, it is assumed that the proposed action would result in approximately16,496 gsf (14,996 zsf) (4.6 FAR) of residential floor area and 3,586 gsf (3,260 zsf) (1.0 FAR) of commercial floor area. It is also assumed that the building would be constructed to the maximum allowable height of 115 feet. Estimating approximately 850 square feet per dwelling unit, it is assumed 19 residential units would be constructed on-site. Under

the 30 percent MIH option, the proposed rezoning would result in the creation of approximately six affordable units with incomes averaging 60 percent of the AMI. Required parking for the market-rate units would be waived as it is fewer than 15 spaces.

3- Description of the Current Proposed Actions and RWCDS

Since the issuance of the October 2018 EAS, the City Planning Commission is considering modifications to the Proposed Actions as follows:

- Revising the Proposed Zoning Map Amendment to R7A/C2-4 (down from R7D/C2-4)

As a result of the potential CPC modification to the Rezoning Area, the above referenced lots and Projected Sites would be mapped with an R7A/C2-4 zoning district as opposed to an R7D/C2-4 zoning district. Therefore, the projected development on Projected Development Sites 1 -4 would be effected by the revision to the Proposed Actions, as would the potential development on Potential Development Site 1. The modifications to the previous proposed actions would result in a smaller RWCDS increment. See Table 1 below.

Table 1- Comparison of Previous and Current RWCDS

Use	Previous RWCDS	Current RWCDS	Difference
Residential	180,990 gsf UG 2 residential floor area (213 dwelling units)	141,644 gsf UG 2 residential floor area (166 dwelling units)	-39,346 gsf of UG 2 residential floor area (-47 dwelling units)
Commercial	39,345 gsf UG 6 commercial floor area	39,345 gsf UG 6 commercial floor area	0

The RWCDS that would result from the potential modifications to the Proposed Actions would include 166 dwelling units occupying 141,644 gsf of residential floor area (47 fewer dwelling units) and the same amount of commercial floor area when compared to what was originally analyzed in the October 2018 EAS. The build year remains unchanged. The potential modifications to the Proposed Actions and RWCDS would not result in any additional discretionary actions.

4- Likely Effects of the Proposed Modifications

The October 2018 EAS and Negative Declaration concluded that the Proposed Actions would not have the potential for significant adverse impacts related to the environment. As discussed above, the October 2018 EAS was revised in April of 2019 to reflect a potential CPC modification to the proposed Zoning Map Amendment. The Zoning Map Amendment would be modified from a proposed R7D/C2-4 zoning district to an R7A/C2-4 zoning district. This change would lower the amount of available FAR in the

proposed Rezoning Area and would result in a smaller overall Projected Development increment under the Proposed Actions. The screening and detailed analyses prepared for the original Proposed Actions in the October 2018 EAS and the April 2019 revised EAS concluded that the current Proposed Actions would not have the potential for significant adverse impacts in the following area: Land Use, Zoning, and Public Policy, Socioeconomic Conditions, Community Facilities and Other Services, Open Space, Shadows, Historic and Cultural Resources, Urban Design and Visual Resources, Hazardous Materials, Transportation, Air Quality, Noise, Neighborhood Character, and Construction.

Since the potential modifications would result in a smaller RWCDS increment, and would result in fewer dwelling units, in the Future With-Action Scenario, the revised EAS based on the current Proposed Actions did not meet or exceed CEQR Technical Manual thresholds for any new impact categories.

As discussed above, the RWCDS resulting from the potential modifications to the Proposed Actions would result in less projected development within the proposed Rezoning Area than what was originally analyzed in the October 2018 EAS. That is because the proposed zoning district (R7A/C2-4) allows for less FAR than the originally analyzed zoning district (R7D/C2-4).

The following paragraphs provide technical explanations for each analysis category that was analyzed in the October 2018 EAS and why the current Proposed Actions would not result in significant adverse environmental impacts. Appropriate maps are also included.

Land Use, Zoning, and Public Policy

Land Use

Under the With-Action Scenario, the Proposed Rezoning would amend the existing M1-1 district to an R7A/C2-4 zoning district. In order to present a conservative assessment, the With-Action Scenario assumed that Projected Development Site 1 would be constructed to an FAR of 4.6 with a height of 95 feet. The building would have approximately 130,897 gsf of floor area (28,455 gsf commercial floor area and approximately 120 dwelling units).

Additionally, Projected Development Site 2 would be a building constructed to an FAR of 4.6 and a height of 95 feet. The building would have approximately 13,915 gsf (3,025 gsf of commercial floor area and 12 dwelling units).

Projected Development Site 3 would be a building constructed to an FAR of 4.6 and a height of 95 feet. The building would have approximately 19,683 gsf (4,279, gsf of commercial floor area and 18 dwelling units).

Additionally, Projected Development Site 4 would be a building constructed to an FAR of 4.6 and a

height of 95 feet. The building would have approximately 16,495 gsf (3,586 gsf of commercial floor area and 15 dwelling units).

Recent neighborhood trends have shown commercial, residential and community facility development in proximity to the rezoning area, with several non-conforming residential uses within 400 feet of the rezoning area. The Proposed Action would reinforce this trend towards a more active residential mixed-use neighborhood, which is common in the residential areas south of the rezoning area and consistent with 1050 Pacific Street rezoning proposal. Therefore, the Proposed Action is not expected to have any adverse impacts on surrounding land uses.

Zoning

The Proposed Actions would change the existing M1-1 zoning district to an R7A/C2-4 zoning district over the Project Area. Doing so would increase the residential floor area in the Rezoning Area and Projected Development Sites, which does not currently permit housing under existing M1-1 zoning regulations. The Proposed Action would increase the allowable FAR on the sites to 4.6.

The proposed C2-4 commercial district would be mapped to a depth of 100 feet from Pacific Street. The proposed C2-4 commercial overlay mapped with the R7A district requires active ground floor uses. The proposed C2-4 district permits Use Groups 5 through 9 and 14 allowing commercial development with up to 2.0 FAR. The proposed C2-4 overlay district requires one accessory parking space per 1,000 square feet of commercial floor area for general retail or service uses. Mapping an R7A/C2-4 in this area would provide opportunities for medium-density housing development under the MIH program with required active commercial and community facility uses on the ground floor.

The proposed rezoning would provide new opportunities for affordable and market-rate housing and commercial development in an underutilized area. The increase in density to the proposed R7A/C2-4 district would facilitate the development of greatly needed housing, including affordable housing in Community District 8. The proposed R7A/C2-4 zoning district would promote the development of underused sites, address the City's growing need for additional housing and help reknit the urban fabric in the area. There is existing residential development within the proposed rezoning area and residential development is a common land use in the surrounding area. The existing M1-1 zoning district is surrounded by residential development in an area well-served by transit.

The proposed zoning map amendment would promote the development of new medium-density housing, which would provide for the productive and more intensive reuse of underutilized industrial property, address the City's growing need for additional housing and better integrate the site with the Prospect Heights neighborhood. The proposed action's affordable housing component would address the City's

Housing New York: A Five-Borough, Ten-Year Plan goals by increasing affordable housing opportunities to help ensure the community remains economically diverse in the face of increasing pressure for market-rate development. The proposed R7A zoning district is an appropriate density due rezoning area's accessibility to public transit. The proposed zoning overlay supports the development of new ground floor commercial uses to serve the neighborhood, provide jobs, and enliven the Pacific Street streetscape. Therefore, significant adverse impacts to zoning are not anticipated and further zoning analysis is not warranted

Public Policy

The Project Site is not part of, or subject to, an Urban Renewal Plan (URP), adopted community 197-a Plan, Solid Waste Management Plan, Business Improvement District (BID), Industrial Business Zone (IBZ), or the New York City Landmarks Law. The Proposed Action is also not a large publically sponsored project, and as such, consistency with the City's PlaNYC 2030 for sustainability is not warranted. In addition, the Rezoning Area is not located in the Coastal Management Zone; therefore a consistency review is not warranted. The Rezoning Area is not located within New York City's designated coastal zone boundary and therefore is not subject to review for its consistency with the City's Waterfront Revitalization Program.

Socioeconomic Conditions

The October 2018 EAS analyzed Proposed Actions which could result in an increment of 213 residential units, which exceeds the CEQR threshold of 200 units established for further assessment of potential indirect residential displacement. As a result, a preliminary socioeconomic assessment was undertaken. The April 2019 EAS is analyzing Proposed Actions which would result in an increment of 166 dwelling units in the Project Area, which does not exceed any CEQR thresholds for analysis. As such, no analysis for socioeconomic conditions is needed and no significant adverse impacts are expected.

Community Facilities and Other Services

The *CEQR Technical Manual* defines community facilities and services as public or publicly funded schools, hospitals, libraries, day care centers and police and fire services. A community facilities analysis examines a proposed action's potential effect on the provision of services by those community facilities. Direct effects occur when a particular action physically alters or displaces a community facility; indirect effects result from increases in population, which creates additional demand on service delivery. The proposed action would not result in physical alteration or displacement of any community facilities, therefore no directs effect to existing community facilities are expected as a result of the proposed action.

The *CEQR Technical Manual* provides thresholds for analyses of indirect effects. Based on these

thresholds, the addition of 166 dwelling units does not require detailed analyses of hospitals, libraries, publicly funded day care centers, or police and fire services. However, the *CEQR Technical Manual* directs that if a proposed action could generate more than 50 public elementary and intermediate school students or 150 public high school students, a more detailed analysis is required.

The October 2018 EAS analyzed a scenario where the Proposed Actions were expected to generated approximately 88 students. In the future with the proposed actions, elementary schools in the study area are projected to have an average utilization level of approximately 73 percent. The addition of approximately 62 elementary school-aged students to the area would increase the utilization rate at a change of approximately one percent. The collective utilization rate for the elementary schools in the study area would continue to be below 100 percent under the Future With-Action Condition, and the increase in the collective utilization rate would be less than five percent. In the future with the proposed actions, intermediate schools in the study area are projected to have an average utilization level of approximately 70 percent. The addition of approximately 26 intermediate school-aged students to the area would increase the utilization rate at a change of approximately three percent. The collective utilization rate for the intermediate schools in the study area would continue to be below 100 percent under the Future With-Action Condition, and the increase in the collective utilization rate would be less than five percent. Therefore, the proposed action is not expected to result in significant adverse impacts to elementary or middle/intermediate schools in the study area and further assessment of educational facilities is not warranted.

The October 2018 analyzed a scenario where the Proposed Actions did not result in any significant adverse impacts with regards to community facilities. As the April 2019 EAS is analyzing a scenario that is smaller than the Projected Development which was analyzed in the October 2018, EAS, it is reasonable to assume that the proposed zoning map amendment change would also not result in any significant adverse impacts, and as such, no further analysis would be required.

Open Space

The October 2018 EAS analyzed a scenario where the Proposed Actions were expected to generated 455 residents to an underserved area with regards to open space, which is above the CEQR preliminary screening threshold of 50 new residents in an area that is underserved by open space. As such, a preliminary analysis of open space impacts due to new residents was conducted. The analysis found that the reduction in the Open Space Ratio related to the October 2018 Proposed Actions would not result in significant adverse impacts and a detailed analysis was not warranted. As the April 2019 EAS analyzes a scenario that would result in an increment of only 353 residents, 102 less than the October 2018 EAS, it can be assumed that there would still be no significant adverse impacts with regards to Open Space and that no further analysis is required.

Shadows

The October 2018 EAS analyzed a scenario in which Projected Sites 1-4 have a maximum height of 115 feet which would result in a shadow radius of 494.5 feet. It was found that no sunlight sensitive or open space resources were found within the radius of the Rezoning Area. As the April 2019 EAS is analyzing a scenario where Projected Sites 1-4 have a maximum height of 95 feet and a maximum shadow radius of only 408.5 feet, no significant adverse impacts with regards to shadows is expected and no further analysis is required.

Historic and Cultural Resources

According to *CEQR Technical Manual* guidelines, impacts on historic resources are considered on those sites affected by the Proposed Actions and in the area surrounding identified development sites. The historic resources study area is therefore defined as the Project Site plus an approximately 400-foot radius around the Proposed Action area.

The Rezoning Area is not a designated local or S/NR historic resource or property, nor is the site part of any designated historic district. The LPC was contacted for their initial review of the project's potential to impact nearby historic and cultural resources and a response was received on February 18th, 2016, indicating that the projected development site has no architectural significance.

In order to determine whether the projected development has the potential to affect nearby off-site historic or architectural resources, the study area was screened for historic and architectural resources. No historic or architectural resources were identified within the 400-foot study area. Therefore, no significant adverse impacts on historic or architectural resources are expected as a result of the Proposed Actions, and further assessment is not warranted.

Unlike the architectural evaluation of a study area that extends beyond the footprint of a project's block and lot lines, the analysis of potential and/or projected impacts to archaeological resources is controlled by the actual footprint of the limits of soil disturbance. Archeological resources are physical remains, usually subsurface, of the prehistoric and historic periods such as burials, foundations, artifacts, wells and privies. The *CEQR Technical Manual* requires a detailed evaluation of a project's potential effect on the archeological resources if it would potentially result in an in-ground disturbance to an area not previously excavated. The existing rezoning area has not been recently disturbed and no recent or distant cultural or archaeological significance have been attached to this area. Further, utilizing the NYS Office of Parks, Recreation and Historic Preservation's "Cultural Resource Information System" (CRIS) mapper, the Rezoning Area does not fall within an archaeologically sensitive area. Based on both current and historic photoreconnaissance of the Rezoning Area, there is little potential for impact to any known or unknown resource due to development. The LPC was contacted for their initial review of the

project's potential to impact nearby historic and cultural resources, and a response was received on February 18th, 2016, indicating that the projected development site has no architectural significance. Therefore, significant adverse impacts to archaeological resources are not expected as a result of the Proposed Actions, and further analysis is not warranted.

As the size of the Rezoning Area did not change, and the proposed Zoning Map Amendment would allow for less FAR than the October 2018 EAS, no significant adverse impacts with regards to historic and cultural resources are expected and no further analysis is required.

Urban Design and Visual Resources

As the Projected Development Sites would be built within the existing lot footprint on the Project Sites, the development in the With-Action Scenario would not alter or disrupt the existing street grid or change the arrangement and orientation of streets in the area. Additionally, the Proposed Actions would not permanently alter the existing sidewalks that border the Project Sites to the east and west. Furthermore, there would not be any changes to the existing sidewalk layout. Overall, the development in the Future With-Action would not alter the existing streets, street grid, streetscape, and sidewalks.

The October 2018 EAS concluded that while the proposed building would change views to the site and alter the scale of the existing built fabric as witnessed from pedestrians on Pacific Street, significant adverse impacts to pedestrian or visual resources would not occur. Development on the Project Site per the rezoning has the potential to reinforce the street edge and improve pedestrian amenities while enhancing the overall quality of the built aesthetic, as no aesthetic visual corridors or view sheds, from or to, the site exist naturally or otherwise under current conditions. The proposed actions would not result in any of the above conditions that would merit further detailed assessment of urban design and visual resources. While the proposed actions could result in the construction of a new 11-story building, which is not permitted "as-of-right" under the existing M1-1 zoning district, the new building would not be out-of-context with the surrounding buildings within the broader study area. Additional mixed-use residential uses induced from the proposed rezoning would reinforce and enhance the residential quality of the study area, many of the uses in this currently zoned M1-1 zoned area are in fact residential. Although the immediate adjacent residential is low- to mid-rise walk-up style buildings, several other mid- to high-rise buildings are found in the broader study area. The proposed actions would not diminish or disturb the existing aesthetic continuity, pedestrian features of the community or neighborhood, and as the proposed actions would not block any view corridors or views to/from any natural areas with rare or defining features, nor would the proposed action impact an historical or culturally sensitive community features. Therefore the proposed actions are not expected to result in any significant adverse urban design or visual resource related impacts.

A No-Action and With-Action view of the Projected Sites under the proposed R7A/C2-4 zoning are

attached after the technical memorandum. As the October 2018 EAS demonstrated that there would be no significant adverse impacts with regards to urban Design under the R7D/C2-4 zoning, there will not be any significant adverse impacts regards to urban design under the R7A/C2-4 zoning district currently being proposed, which allows for less FAR and less height than the R7D/C2-4 zoning district.

Hazardous Materials

A hazardous material is any substance that poses a threat to human health or the environment. Substances that can be of concern include, but are not limited to, heavy metals, volatile and semi-volatile organic compounds (VOCs and SVOCs), methane, polychlorinated biphenyls (PCBs), and hazardous wastes (defined as substances that are chemically reactive, ignitable, corrosive, or toxic). According to the *CEQR Technical Manual*, the potential for significant impacts from hazardous materials can occur when: a) hazardous materials exist on a site; and b) action would increase pathways to their exposure; or c) an action would introduce new activities or processes using hazardous materials.

Projected Development Site 1, which is controlled by the Applicant, is currently improved by an occupied two-story warehouse and a vacant lot. This building would be redeveloped as a result of the proposed action. As the building was previously occupied by industrial uses, a further review of the site's potential for hazardous material contamination was conducted.

In February 2015, a Phase I Environmental Site Assessment was performed at Projected Development Site 1 by Environmental Planning and Management Inc. (see **Appendix D**). The purpose of the ESA is to identify the presence of Recognized Environmental Conditions (RECs) that may be associated with the subject property, as defined by American Society of Testing Engineers (ASTM) E-1527-05. The Phase I ESA was conducted in general accordance with the scope and limitations of the ASTM International Standard E 1527-13, Standard Practice for Environmental Site Assessments: Phase I Environmental Site Assessment Process and the "due diligence" regulations of the Comprehensive Environmental Response, Compensation and Liability Act (CERCLA) and Section 9601 (35)(b) of the Superfund Amendments and Reauthorization Act. At the time of site visit, Affinity Creations, Inc. occupied the site; their activities consisted of manufacturing commercial display hardware such as cabinets, racks, and stands.

Through performance of this ESA, the following Recognized Environmental Conditions (RECs) were identified:

- **Decommissioned Boiler & UST:** During Phase I site inspection on February 5, 2015 a number two fuel oil-burning boiler in the cellar of the subject property was observed located in the northwestern corner of the onsite warehouse footprint. According to the owner of the subject property, the onsite building has been heated using natural gas prior to its most recent purchase in 1994. The owner of the subject property was unaware of

the location of any current or former underground or aboveground number two fuel oil storage tank(s) onsite. No indication of tank location was observed during the site visit with the exception of an exterior vent pipe north of the cellar. Fire insurance maps dating from 1951 and 1965 identify a gas tank in the vacant lot to the east of the onsite warehouse approximately 170 feet east of the cellar boiler.

In the absence of any available records detailing the closure and/or removal of an onsite tank or tanks, location identification via ground-penetrating radar (GPR) survey was recommended.

- **Historic use:** Fire Insurance maps dating from 1926 through 2007 indicated that majority history of the subject property was in use as manufacturing, first for the National Biscuit Company and later for indeterminate manufacturing. A 1906 fire insurance map depicts a chemical storage structure near the subject property's southeastern corner. A 1926 fire insurance map shows the same structure as a chemical works. City directory records indicate that chemical manufacturing occurred onsite in 1928. City directory records also indicate that automotive repair took place on the subject property in 1934 and 1985. A subsurface investigation was recommended in order to determine if impacts to the subject property from these previous onsite uses have occurred.

- **Off-site impacts:** Fire insurance maps dating from 1926 through 2007 depicted the north adjacent property as a large automotive repair facility improved with several gas tanks. Fire insurance maps dating from 1951 and 1988 through 2007 depicted automotive repair facilities 100 feet east and 50 feet south of the subject property, respectively. These latter two properties were also identified in EDR's Historical Auto Stations Database. Based on the size, use, duration of use, proximity, and/or location topographically upgradient, these properties constitute the potential to adversely impact the subject property. A subsurface investigation was recommended in order to determine if impacts to the subject property from these previous off-site uses have occurred.

Through performance of this Phase I, the following non-REC environmental concerns were identified:

At the time of site reconnaissance, the subject property was improved with fluorescent light fixtures. Prior to any renovation or demolition that may impact them, EPM recommends inspecting these fixtures for the presence of polychlorinated biphenyl (PCB)-containing ballasts.

According to New York City Department of Buildings records reviewed, structures on the subject property were constructed in approximately 1900. Based on the time of original construction, asbestos-containing

materials and lead-based paint may be present within structures at the subject property. Prior to any renovation or demolition, which may impact them, asbestos and lead-based paint inspections are recommended to determine the condition, quantity, and location of these materials, and removing them in accordance with federal, state, and local regulations.

2.7.2 Summary of Phase II ESI

In response to the findings of the previous Phase I, a Limited Phase II ESI was conducted by Integral Engineering at the Projected Development Site 1 (see **Appendix D**). A Ground Penetrating Radar (GPR) survey and subsurface soil investigation was performed.

A GPR investigation was performed in February 2015, to clear soil-boring locations and attempt to locate UTRs identified as potentially located on site in the Phase I report. Borings and GPR were performed for the following REC's:

- Cellar (decommissioned boiler, suspected fuel oil tank , floor drains) – SB-1
- Chemical storage/processing on vacant lot – SB-2
- UST search on the vacant lot – SB-3, SB-4, SB-5
- General historic manufacturing use of warehouse – SB-6

No indications of a subsurface tank were identified in the area of the cellar. However GPR identified the location of a potential UST of approximately 10,000 gallons within the vacant lot where potential gasoline and automotive uses were identified as being present in the past in the Phase I ESA.

2.7.2.1 Phase II Subsurface Findings

In March 2015, AARCO Environmental Services Corp. installed six borings to evaluate shallow subsurface soil conditions at the following REC locations: building cellar, warehouse, and vacant lot. Select soil samples were analyzed at a State-certified laboratory for volatile organic compounds (VOCs) and semi-volatile organic compounds (SVOCs), Target Analyte List (TAL) Metals, and Polychlorinated Biphenyls (PCBs).

Historic fill was observed across the Site from 0 – 10 feet bgs. Historic fill is "non-native material, historically deposited on a site to create useable land, which was contaminated prior to placement."

Soil Analytic Results

The results from the soil samples were compared to NYSDEC CP-51 Unrestricted Use Soil Cleanup Objectives (SCOs).

VOCs

No Unrestricted Use SCO's were exceeded for VOCs in the soil samples.

SVOCs

Seven SVOCs were detected above Unrestricted Use SC0s in the shallow soil samples (5-10 Ft) below ground surface (bgs) of two borings SB-4 and SB-5 (near the vacant lot gasoline UST). However, all concentrations were within one order of magnitude of its SCO. Low levels of SVOCs found within these borings could be attributed to placement of historic fill.

Metals

Concentrations of lead, mercury, and nickel exceeded their respective SCOs in three (3) borings on the vacant lot. Similarly to SVOC's these low levels of metals could be attributed to the placement of historic fill.

PCBs

No PCBs were detected in any samples.

2.7.3 Conclusions

The constituents detected in the subsurface were indicative of historic fill found in this area and possibly the presence of a limited petroleum release near the formerly utilized gasoline tank on the vacant lot. There was no evidence from the site investigation that a widespread spill had occurred.

As indicated in the Phase II, for commercial uses, it is unlikely that the observed concentrations would trigger remediation, as only one SVOC exceeds its commercial restricted use SCO, with the exception of the closure of the vacant lot UST. As the Applicant is committed to following any necessary remediation procedures per all applicable local, state, and federal procedures, the proposed action would not result in any significant adverse impacts with respect to hazardous materials.

As noted in a letter from the New York City Department of Environmental Protection (DEP) dated April 5, 2016 (Appendix B), DEP has reviewed the Phase I ESA and the Limited Phase II ESI. Based on the historical on-site and/or surrounding area land uses, DEP has determined that a Phase II Environmental Site Assessment (ESA) is necessary to adequately identify/characterize the surface and subsurface soils of Projected Development Site 1 (Applicant-controlled). Phase II Investigative Protocol/Work Plan summarizing the proposed drilling, soil, groundwater, and soil vapor sampling activities should be developed in accordance with the *CEQR Technical Manual* and submitted to DEP for review and approval. The Work Plan should include blueprints and/or site plans displaying the current surface grade and sub-grade elevations and a site map depicting the proposed soil, groundwater, and soil vapor sampling locations. Soil and groundwater samples should be collected and analyzed by a New York State Department of Health (NYSDOH) Environmental Laboratory Approval Program (ELAP) certified laboratory for the presence of volatile organic compounds (VOCs) by United States Environmental Protection

Agency (EPA) Method 8260, semi-volatile organic compounds by EPA Method 8270, pesticides by EPA Method 8081, polychlorinated biphenyls by EPA Method 8082, and Target Analyte List metals (filtered and unfiltered for groundwater samples). The soil vapor sampling should be conducted in accordance with NYSDOH's October 2006 Guidance for Evaluating Soil Vapor Intrusion in the State of New York. The soil vapor samples should be collected and analyzed by a NYSDOH ELAP certified laboratory for the presence of VOCs by EPA Method TO-15. An Investigative Health and Safety Plan (HASP) should also be submitted to DEP for review and approval. The Phase II Work Plan and HASP should be submitted to DEP for review and approval prior to the start of any fieldwork.

2.7.2 (E) Designations

To avoid any potential impacts associated with hazardous materials, and in accordance DEP correspondence (April 5, 2016), an (E) designation for hazardous materials (E-503) will be placed on Projected Development Sites 1, 2, 3 and 4, and Potential Development Site 1, which are not under control of the Applicant. The following parcels will receive (E) designations: Block 1133, Lots 45, 46, 47, 48, 49, 51, 52 and 53.

The (E) designation text related to hazardous materials is as follows:

Task 1 – Sampling Protocol

The applicant submits to OER, for review and approval, a Phase 1 of the site along with a soil and groundwater testing protocol, including a description of methods and a site map with all sampling locations clearly and precisely represented.

If site sampling is necessary, no sampling should begin until written approval of a protocol is received from OER. The number and location of sample sites should be selected to adequately characterize the site, the specific source of suspected contamination (i.e., petroleum based contamination and non-petroleum based contamination), and the remainder of the site's condition. The characterization should be complete enough to determine what remediation strategy (if any) is necessary after review of sampling data. Guidelines and criteria for selecting sampling locations and collecting samples are provided by OER upon request.

Task 2 – Remediation Determination and Protocol

A written report with findings and a summary of the data must be submitted to OER after completion of the testing phase and laboratory analysis for review and approval. After receiving such results, a determination is made by OER if the results indicate that remediation is necessary. If OER determines that no remediation is necessary, written notice shall be given by OER.

If remediation is indicated from the test results, a proposed remediation plan must be submitted to OER for review and approval. The applicant must complete such remediation as determined necessary by OER. The applicant should then provide proper documentation that the work has been satisfactorily completed.

An OER-approved construction-related health and safety plan would be implemented during evacuation and construction and activities to protect workers and the community from potentially significant adverse impacts associated with contaminated soil and/or groundwater. This plan would be submitted to OER for review and approval prior to implementation.

All demolition or rehabilitation would be conducted in accordance with applicable requirements for disturbance, handling and disposal of suspect lead-paint and asbestos-containing materials. For all projected and potential development sites where no E-designation is recommended, in addition to the requirements for lead-based paint and asbestos, requirements (including those of NYSDEC) should petroleum tanks and/or spills be identified and for off-site disposal of soil/fill would need to be followed.

With these (E) designations in place, significant adverse impacts related to hazardous materials are not expected, and no further analysis is warranted. Therefore, the proposed actions would not result in significant adverse impacts related to hazardous materials.

These (E) designations are applicable to the modified Zoning Map Amendment as well.

Transportation

The October 2018 assessment analyzed a Reasonable Worst Case Development Scenario that would have result in 213 dwelling units and 39,345 gsf of commercial floor area. This was a scenario in which multiple CEQR thresholds related to parking required analysis. The sections included, traffic, pedestrians, a safety assessment, and a parking assessment. The following conclusions were drawn from that analysis:

- The proposed action would not lead to an increase of 50 or more vehicle trips at any one intersection in the vicinity of the projected development sites. Therefore, the proposed action would not lead to any significant adverse traffic impacts.
- The proposed action would not lead to an increase of 200 or more public bus trips, and the nearby Franklin Avenue subway station is not projected to experience an increase of 200 or more subway trips. Therefore, the proposed action would not lead to any significant adverse subway or bus impacts.

- The results of the pedestrian LOS analyses indicate that no significant adverse pedestrian impacts are projected to occur as a result of the proposed action.

- Neither of the study intersections – Classon Avenue/Pacific Street and Grand Avenue/Pacific Street – are classified as "high crash locations" based on *CEQR Technical Manual* criteria.

- Due to the location of the projected development sites within the *CEQR Technical Manual* Parking Zone 2, the proposed action's future parking demands are not considered significant due to the magnitude of available alternative modes of transportation, including frequent transit services (i.e., subway and bus). Therefore, no significant adverse parking impacts are projected.

As the April 2019 EAS analyzes an RWCDS which results 166 dwelling units and 39,345 gsf of commercial floor area, a development program that is smaller than what was previously analyzed and found to have no impacts with regards to transportation, it is reasonable to assume that proposed R7A/C2-4 zoning map amendment would not result in significant adverse impacts related to transportation and no further analyses are required.

Air Quality

When assessing the potential for air quality significant impacts, the *CEQR Technical Manual* seeks to determine a proposed action's effect on ambient air quality, or the quality of the surrounding air. Ambient air can be affected by motor vehicles, referred to as "mobile sources," or by fixed facilities, referred to as "stationary sources." This can occur during operation and/or construction of a project being proposed. The pollutants of most concern are carbon monoxide, lead, nitrogen dioxide, ozone, relatively coarse inhalable particulates (PM_{10}), fine particulate matter ($PM_{2.5}$), and sulfur dioxide.

The *CEQR Technical Manual* generally recommends an assessment of the potential impact of mobile sources on air quality when an action increases traffic or causes a redistribution of traffic flows, creates any other mobile sources of pollutants (such as diesel train usage), or adds new uses near mobile sources (e.g., roadways, parking lots, garages). The *CEQR Technical Manual* generally recommends assessments when new stationary sources of pollutants are created, when a new use might be affected by existing stationary sources, or when stationary sources are added near existing sources and the combined dispersion of emissions would impact surrounding areas.

Mobile Sources

According to the *CEQR Technical Manual*, projects, whether site-specific or generic, may result in significant mobile source air quality impacts when they increase or cause a redistribution of traffic; create

any other mobile sources of pollutants (such as diesel trains, helicopters etc.); or add new uses near mobile sources (roadways, garages, parking lots, etc.). Projects requiring further assessment include:

- Projects that would result in placement of operable windows, balconies, air intakes or intake vents generally within 200 feet of an atypical source of vehicular pollutants.

- Projects that would result in the creation of a fully or partially covered roadway, would exacerbate traffic conditions on such a roadway, or would add new uses near such a roadway.

- Projects that would generate peak hour auto traffic or divert existing peak hour traffic of 170 or more auto trips in this area of the City.

- Projects that would generate peak hour heavy-duty diesel vehicle traffic or its equivalent in vehicular emissions resulting from 12 or more heavy-duty diesel vehicles (HDDVs) for paved roads with average daily traffic of fewer than 5,000 vehicles, 19 or more HDDVs for collector roads, 23 or more HDDVs for principal and minor arterials, or 23 or more HDDVs for expressways and limited-access roads.

  Projects that would result in new sensitive uses (e.g., schools or hospitals) adjacent to large existing parking facilities or parking garage exhaust vents.

- Projects that would result in parking facilities or applications requesting the grant of a special permit or authorization for parking facilities; or projects that would result in a sizable number of other mobile sources of pollution (e.g., a heliport or a new railroad terminal).
- Projects that would substantially increase the vehicle miles traveled in a large area.

The proposed actions would not result in any of the above thresholds being crossed and would not require further mobile source assessment. The proposed action would not result in the placement of new operable windows within 200 feet of any atypical vehicular source of pollutants, nor would it result in the creation of a fully or partially covered roadway, generate over 170 or more net new increment auto trips or notable heavy-duty diesel vehicle traffic, place new sensitive uses adjacent to a large parking facility, result in other mobile sources of pollution, or substantially increase vehicle miles traveled.

Stationary Sources

According to the *CEQR Technical Manual*, projects may result in stationary source air quality impacts when one or more of the following occurs:

- New stationary sources of pollutants are created (e.g., emission stacks for industrial plants, hospitals, other large institutional uses).

- Certain new uses near existing (or planned future) emissions stacks are introduced that may affect the use.

- Structures near such stacks are introduced so that the structures may change the dispersion of emissions from the stacks so that surrounding uses are affected.
- Fossil fuels (fuel oil or natural gas) for heating/hot water, ventilation, and air conditioning systems are used.
- Large emission sources are created (e.g., solid waste or medical-waste incinerators, cogeneration facilities, asphalt/concrete plants, or power-generating plants, etc.).
- New sensitive uses are located near a large emission source.
- Medical, chemical, or research labs are created or result in new uses being located near them.
- Operation of manufacturing or processing facilities is created.
- New sensitive uses created within 400 feet of manufacturing or processing facilities.
- Potentially significant odors are created.
- New uses near an odor-producing facility are created.
- "Non-point" sources that could result in fugitive dust are created.
- New uses near non-point sources are created.
- A generic or programmatic action is introduced that would change or create a stationary source or that would expose new populations to such a stationary source.

The projected and potential development sites would utilize fossil fuels for the future buildings' heating/hot water, ventilation, and air conditioning systems (HVAC) systems, thus an HVAC and Hot Water Boiler Emissions screening was completed. In addition, detailed stationary source air quality analyses were performed to evaluate the potential for project-on-project impacts as well as cumulative impacts. Finally, an industrial source screening assessment was completed to assess the potential for adverse effects due to industrial uses that may be located proximate to the rezoning area. The analyses are based on the RWCDS that has been established for the proposed action, as shown in **Table 2.9-1**.

Table 2.9-1 Reasonable Worst-Case Development Scenario (RWCDS)

Site No.	Block	Lot	Lot Area (sf)	Existing Zoning	Proposed Zoning	ZQA/MIH: Allowable Building Size in GSF (4.6 FAR)	ZQA/MIH: Allowable Height (ft.)
Projected Development Site 1	1133	32	23,100	M1-1	R7A/C2-4	130,897	95
	1133	42	2,750	M1-1	R7A/C2-4		
Existing Site	1133	43	2,750	M1-1	R7A/C2-4	--	--
	1133	44	2,750	M1-1	R7A/C2-4	--	--
Projected Development Site 2	1133	45	2,750	M1-1	R7A/C2-4	13,915	95
Projected Development Site 3	1133	48	1,320	M1-1	R7A/C2-4	19,683	95
	1133	49	2,570	M1-1	R7A/C2-4		
Projected Development Site 4	1133	51	1,630	M1-1	R7A/C2-4	16,495	95
	1133	52	1,630	M1-1	R7A/C2-4		
Potential Development Site 1	1133	46	2,750	M1-1	R7A/C2-4	36,078	95
	1133	47	2,750	M1-1	R7A/C2-4		
	1133	53	1,630	M1-1	R7A/C2-4		

[1] Existing site will remain unchanged with no future development anticipated.

HVAC and Hot Water Boiler Emissions Screening

For the purposes of detailed HVAC analysis to determine the potential for cumulative impacts related to e missions from the HVAC systems of all Projected Development Sites and Potential Development Site, it was assumed that the hypothetical HVAC stack will be located at the middle of all sites. The hypothetical stack height and development size was plotted on the graph for residential developments and No. 2 fuel oil provided in the air quality appendices in the *CEQR Technical Manual*, as shown in **Figure 2.9-1**. This graph indicates the minimum distance between the proposed development and buildings of a similar or greater height in order to avoid a potential air quality impact. Stack height for the emissions vent was estimated as three feet higher than the proposed building height, utilizing the 100 foot curve. For the development of approximately this size (217,068 gsf in total), the emissions vents should be at least approximately 165 feet away from the nearest building of similar or greater height. According to the information passed along from DCP, another rezoning project (1050 Pacific Street rezoning, 17DCP205K) across Classon Avenue (70 feet wide), has just been approved, which would allow the potential new development to reach the height of 95 feet, the same as our proposed developments. The operation of the proposed development might result in stationary source air quality impacts on the potential new developments within the rezoning area of 17DCP205K. Therefore, a detailed HVAC analysis is required

to assess the potential cumulative air quality impact from the total developments on the potential new developments of 1050 Pacific Street Rezoning.

Figure 2.9-1 HVAC Screening Analysis, Cumulative Impact from all Projected and Potential Sites

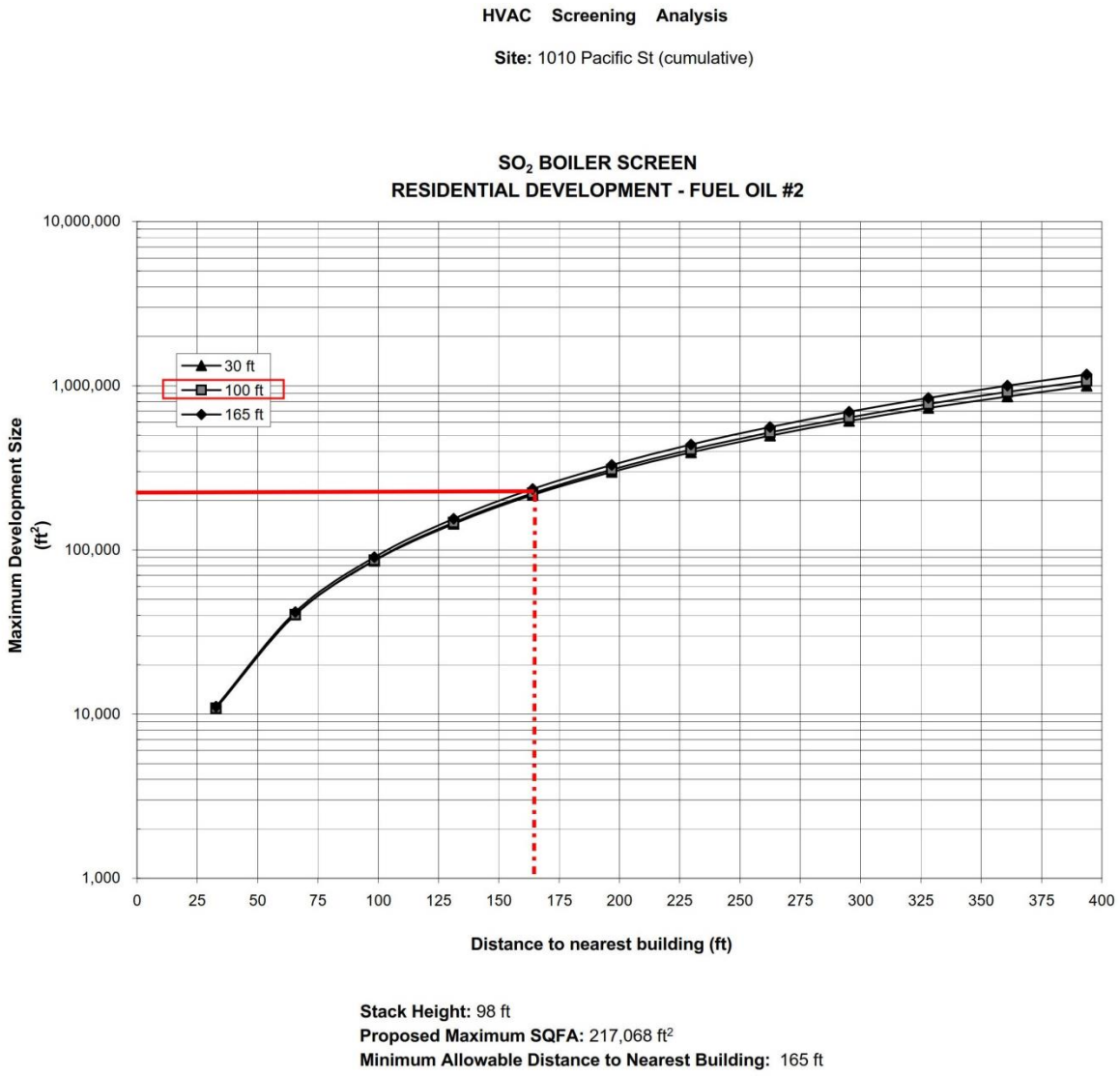

However, as indicated in *CEQR Technical Manual*, this screening figure is only appropriate for sources at least 30 feet from the nearest buildings of similar or greater height. Since Projected Sites 2, 3, 4 and Potential Site are adjacent and would be attached to each other, a refined dispersion modeling analysis approach is warranted. Additionally, the residential buildings located at 1020 Pacific St (Block 1133, Lot 43) and 1022 Pacific St (Block 1133, Lot 44) would be immediately adjacent to Projected Site 1 and Projected Site 2, a detailed modeling analysis is also required to determine the cumulative impact from the total development on these two buildings.

Detailed Stationary Source Analyses

The projected development sites are located within close proximity to one another (see **Figure 2.9-2**), and are all assumed to be redeveloped with 115-feet-tall buildings. As such, detailed stationary source air quality analyses were undertaken to assess the potential for project-on-project impacts and cumulative impacts. More specifically, the detailed analyses evaluate the potential for the following potential impacts:

a) The cumulative impact from the proposed HVAC system of Projected Development Sites 1, 2, 3, 4, and Potential Development Site 1 on the Existing Site;

b) The cumulative impact from the proposed HVAC system of Projected Development Sites 2, 3, and 4, and Potential Development Site 1 on Projected Development Site 1;

c) The cumulative impact from the proposed HVAC system of Projected Development Sites 1, 3 and 4, and Potential Development Site 1 on Projected Development Site 2;

d) The cumulative impact from the proposed HVAC system of Projected Development Sites 1, 2 and 4, and Potential Development Site 1on Projected Development Site 3;

e) The cumulative impact from the proposed HVAC system of Projected Development Sites 1, 2 and 3, and Potential Development Site 1on Projected Development Site 4.

f) The cumulative impact from the proposed HVAC system of Projected Development Sites 1, 2, 3, and 4 on Potential Development Site 1.

g) The cumulative impact from the proposed HVAC system of Projected Development Sites 1, 2, 3, 4, and Potential Development Site 1 on potential development at 1050 Pacific Street.

h) A detailed air quality modeling analysis was performed using USEPA's AERMOD model and the most recent five years of meteorological data. The USEPA's AERMOD is the most suitable mathematical dispersion model for performing a refined air quality impact analysis. AERMOD, as described in *User's Guide for the AMS/EPA Regulatory Model – AERMOD* (EPA-454/B-03-001), calculates pollutant concentrations from one or more sources using hourly meteorological data. AERMOD is applicable to rural and urban areas, flat and complex terrain, surface and elevated releases, and multiple sources (including point, area, and volume sources). AERMOD incorporates current concepts about flow and dispersion in complex terrain, including updated treatments of the boundary layer theory, understanding of turbulence and dispersion, and handling of terrain interactions. The AERMOD model also incorporates the algorithms from the PRIME model, which is designed to predict impacts in the "cavity region" (i.e., the area around a structure which under certain conditions may affect an exhaust plume, causing a portion of the plume to become entrained in a recirculation region). The Building Profile Input Program (BPIP) program for the PRIME model (BPIPRM) was used to determine the projected building dimensions modeling with the building downwash algorithm enabled. The modeling of downwash from sources accounts for all obstructions within a radius equal to five obstruction heights of the stack. In this analysis, both downwash and no downwash conditions have been taken in consideration, and analyzed.

The meteorological data set used with AERMOD consists of the latest available five consecutive years (2013-2017) of meteorological data in order to ensure that an adequate number of hours are simulated to determine compliance with applicable standards and guideline concentrations. As recommended in the *CEQR Technical Manual,* this 5-year meteorological data set uses surface data collected at the nearest representative airport, JFK International Airport, and upper air data concurrently collected at Brookhaven, NY. The meteorological data set includes wind speeds, wind directions, ambient temperatures, and mixing height data for every hour of a year. These data were processed using the EPA AERMET program to develop data in a format which can be readily processed by the AERMOD model. The land uses around the site where meteorological surface data were available were classified using categories defined in digital United States Geological Survey (USGS) maps to determine surface parameters used by the AERMET program.

Discrete receptors (i.e., locations at which concentrations are calculated) were modeled along the existing and proposed buildings' façades to represent potentially sensitive locations such as operable windows and intake vents. For each of the proposed buildings, receptors were conservatively placed on the façades of the maximum development envelope. Rows of receptors at spaced intervals on the modeled buildings were analyzed at multiple elevations.

The 1-hour and annual average NO_2 concentration increments from the proposed project's stationary combustion sources were estimated using AERMOD model's Tier 2 updated Ambient Ratio Method, referred as "ARM2". ARM2 does not require additional input data that is subject to case-by-case review and approval. The model execution time for ARM2 is faster than for those more computationally intensive refined methods. The ARM2 method performs better than the old ARM method, and is comparable to the more refined EPA modeling methods for 1-hour ambient NO_2 concentrations.

Total 1-hour NO_2 concentrations were determined following methodologies that are accepted by the EPA, and which are considered appropriate and conservative. The methodology used to determine the compliance of total 1-hour NO_2 concentrations from the proposed sources with the 1-hour NO_2 NAAQS was based on adding the monitored background to modeled concentrations, as follows: hourly modeled concentrations from proposed sources were first added to the seasonal hourly background monitored concentrations; then the highest combined daily 1-hour NO_2 concentration was determined at each receptor location and the 98th percentile daily 1-hour maximum concentration for each modeled year was calculated within the AERMOD model; finally the 98th percentile concentrations were averaged over the latest five years.

The refined dispersion modeling analysis was performed for $PM_{2.5}$, PM_{10}, NO_2 and SO_2 with emission rates for No. 2 fuel oil first, then natural gas if No. 2 fuel oil fails. If a source could not meet the National Ambient Air Quality Standards (NAAQS) or $PM_{2.5}$ *de minimis* criteria, the stack would then be set back in five-foot increments until the source met the respective criteria.

Figure 2.9-2 1010 Pacific Street Rezoning Project Sites

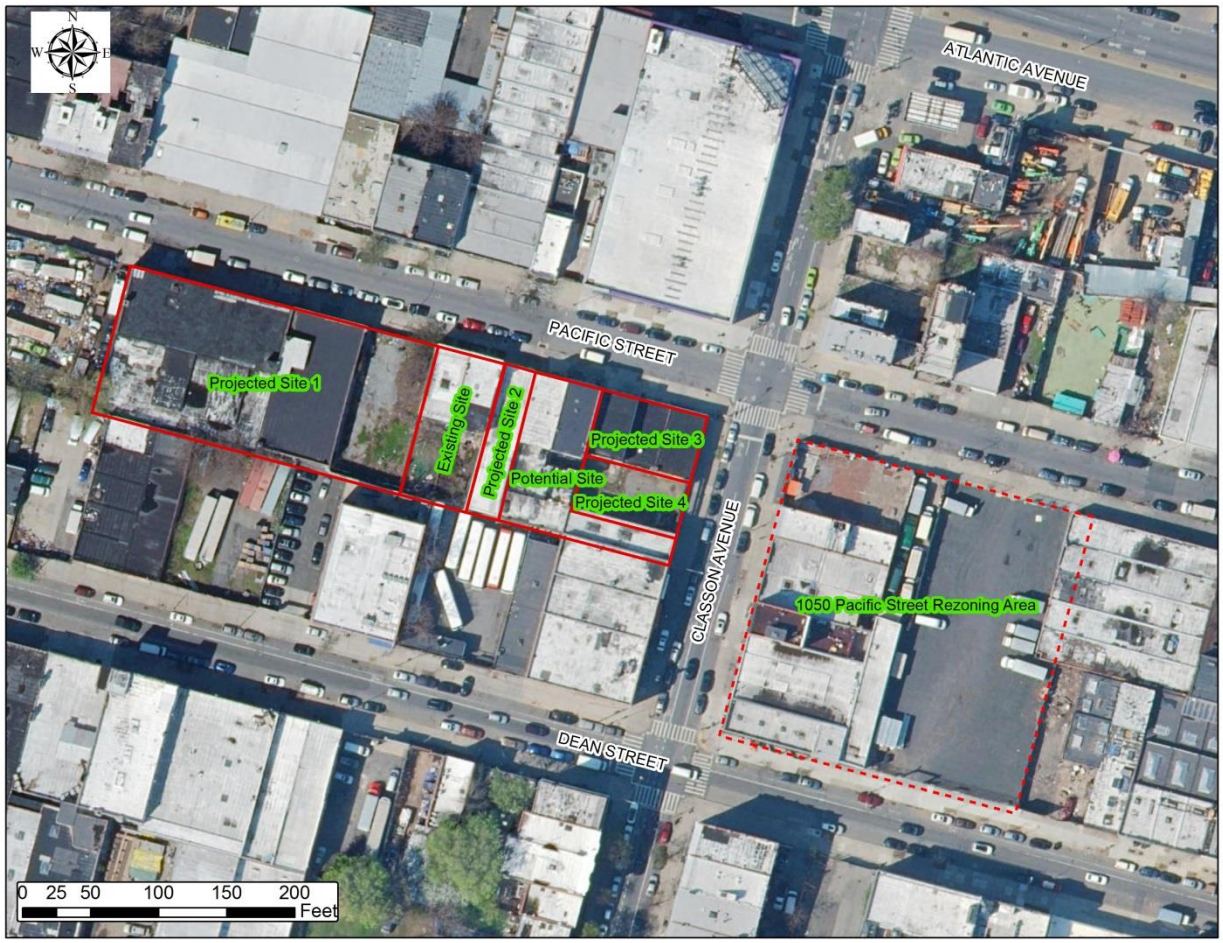

An estimate of the emissions from the HVAC systems was made based on the proposed development size, type of fuel used and type of construction with below fuel consumptions rates: for residential developments, 60.3 ft^3/ft^2-year and 0.43 gal/ft^2-year would be used for natural gas and No. 2 fuel oil, respectively. Short-term factors was determined by using peak hourly fuel consumption estimates for heating, hot water and cooling systems. Emission factors for each fuel were obtained from the EPA *Compilation of Air Pollutant Emission Factors, AP-42, Fifth Edition, Volume I: Stationary Point and Area Sources*. **Table 2.9-2** presents the HVAC emission rates firing No. 2 fuel oil and stack parameters used in the AERMOD.

Impacts concentrations would first be predicted using AERMOD assuming that all HVAC systems are powered by the No. 2 fuel oil. If exceedances of criteria were predicted under the No. 2 fuel oil option, a further modeling analysis under the natural gas option would be warranted.

Additionally, it may not be reasonable to assume the stack(s) to be at the edge of the building roof. The *Building Code of the City of New York* regulates the placement of chimneys and vents and of buildings relative to nearby chimneys and vents. The *Zoning Resolution* and the *Air Pollution Control Code* both

contain performance standards for emissions from manufacturing uses. These regulations should be considered when determining the reasonable worst-case location(s) for modeling, when the exact locations of the proposed stack(s) are not available.

Table 2.9-2 HVAC Emission Rates and Stack Parameters for the Proposed Buildings

	Projected Site 1	Projected Site 2	Projected Site 3	Projected Site 4	Potential Site 1
Emission Rate (g/s)					
1-Hr NO_x	5.92E-02	6.29E-03	8.90E-03	7.46E-03	1.63E-02
Annual NO_x	1.62E-02	1.72E-03	2.44E-03	2.04E-03	4.47E-03
24-Hr PM_{10}	9.77E-03	1.04E-03	1.47E-03	1.23E-03	2.69E-03
24-Hr $PM_{2.5}$	9.77E-03	1.04E-03	1.47E-03	1.23E-03	2.69E-03
Annual $PM_{2.5}$	2.68E-03	2.84E-04	4.02E-04	3.37E-04	7.38E-04
1-Hr SO_2	6.30E-04	6.70E-05	9.48E-05	7.94E-05	1.74E-04
Stack Parameters					
Stack Height (feet)	98	98	98	98	98
Stack Diameter (feet)	1	1	1	1	1
Exhaust Temperature (K)	426	426	426	426	426
Exhaust Velocity (m/s)	5.53	0.59	0.83	0.70	1.52

The AERMOD model was used to predict impacts of SO_2, NO_2, PM_{10}, and $PM_{2.5}$ emissions over the averaging time following the NAAQS criteria. For $PM_{2.5}$, CEQR-established *de minimis* thresholds for $PM_{2.5}$ were used to determine significant impacts:

- Predicted 24-hour maximum $PM_{2.5}$ concentration increase of more than half the difference between the 24-hour background concentration and the 24-hour standard; or
- Predicted annual average $PM_{2.5}$ concentration increments greater than 0.3 $\mu g/m^3$ at any receptor location for stationary sources.

The modeling results would be added to the background concentrations, then be compared to NAAQS or *de minimis*. Background concentrations are ambient pollution levels associated with existing stationary,

mobile, and other area emission sources. The NYSDEC maintains an air quality monitoring network and produces annual air quality reports that include monitoring data for CO, NO_2, PM_{10}, $PM_{2.5}$, and SO_2. To develop background levels, pollutant concentrations from monitoring sites located closest to the project area were obtained from New York State Ambient Air Quality Report for 2017. **Table 2.9-3** summarizes the background concentrations and critera for each of the pollutants. $PM_{2.5}$ impacts are assessed on an incremental basis and compared with the $PM_{2.5}$ *de minimis* criteria, without considering the annual background. Therefore, the annual $PM_{2.5}$ background is not presented in the table.

Table 2.9-3 Background Concentration and Criteria

Pollutant	Averaging Time	Monitoring Station	Background Concentration ($\mu g/m^3$)	NAAQS / *de minimis* ($\mu g/m^3$)
Nitrogen Dioxide (NO_2)	1-hour	Queens College 2	112.2	188
	Annual	Queens College 2	30.2	100
Particular Matter (PM_{10})	24-hour	Division Street	45	150
Particular Matter ($PM_{2.5}$)	24-hour	PS 314	16.27	9.4
	Annual	PS 314	-	0.3
Sulfur Dioxide (SO_2)	1-hour	Queens College 2	18.2	196

Modeling Results

a) Cumulative HVAC Impact on Existing Site

Table 2.9-4 presents the AERMOD model predicted cumulative impacts from Projected Development Sites 1, 2, 3, 4, and Potential Development Site on the Existing Site using No. 2 fuel oil. As shown in the table, no significant adverse air quality impact on the Existing Site would occur.

Table 2.9-4 Maximum Modeled Concentration (µg/m^3) on Existing Site

Pollutant	Averaging Time	Maximum Modeled Concentration	Background Concentration	Total Concentration	NAAQS/ *de minimis*
NO_2	annual	1.1	30.2	31.3	100.0
	1-hour	113.0	-	113.0	188.0
SO_2	1-hour	0.2	18.2	18.4	196
PM_{10}	24-hour	0.88	48	48.9	150
$PM_{2.5}$	annual	0.11	-	0.11	0.3
	24-hour	0.88	-	0.88	9.4

b) Cumulative HVAC Impact on Projected Development Site 1

Table 2.9-5 presents the AERMOD model predicted cumulative impacts from Projected Development Sites 2, 3, 4, and Potential Development Site 1 on Projected Development Site 1. As shown in the table, no significant adverse air quality impact on Projected Site 1 would occur.

Table 2.9-5 Maximum Modeled Concentration (µg/m^3) on Projected Site 1

Pollutant	Averaging Time	Maximum Modeled Concentration	Background Concentration	Total Concentration	NAAQS/ *de minimis*
NO_2	Annual	0.6	30.2	30.8	100.0
	1-hour	103.1	-	103.1	188.0
SO_2	1-hour	0.5	18.2	18.7	196
PM_{10}	24-hour	3.05	48	51.1	150
$PM_{2.5}$	Annual	0.11	-	0.11	0.3
	24-hour	3.05	-	3.05	9.4

c) Cumulative HVAC Impact on Projected Development Site 2

Table 2.9-6 presents the AERMOD model predicted cumulative impacts from the HVAC system of Projected Development Sites 1, 3, 4, and Potential Development Site 1 on Projected Development Site 2. As shown in the table, no significant adverse air quality impact on Projected Development Site 2 would occur.

Table 2.9-6 Maximum Modeled Concentration (µg/m^3) on Projected Site 2

Pollutant	Averaging Time	Maximum Modeled Concentration	Background Concentration	Total Concentration	NAAQS/ *de minimis*
NO_2	annual	1.2	30.2	31.4	100.0
	1-hour	133.1	-	133.1	188.0
SO_2	1-hour	0.5	18.2	18.7	196
PM_{10}	24-hour	3.24	48	51.2	150
$PM_{2.5}$	annual	0.16	-	0.16	0.3
	24-hour	3.24	-	3.24	9.4

d) Cumulative HVAC Impact on Projected Development Site 3

Table 2.9-7 presents the AERMOD model predicted cumulative impacts from Projected Development Sites 1, 2, 4, and Potential Development Site 1 on Projected Development Site 3. As shown in the table, the exceedance of $PM_{2.5}$ annual *de minimis* level was predicted on Projected Development Site 3 using No.2 fuel oil. Therefore, a further modeling analysis under the natural gas option is warranted.

Table 2.9-7 Maximum Modeled Concentration (µg/m^3) on Projected Site 3

Pollutant	Averaging Time	Maximum Modeled Concentration	Background Concentration	Total Concentration	NAAQS/ *de minimis*
NO_2	annual	1.2	30.2	31.4	100.0
	1-hour	154.5	-	154.5	188.0
SO_2	1-hour	0.9	18.2	19.1	196
PM_{10}	24-hour	8.15	48	56.2	150
$PM_{2.5}$	annual	0.35	-	**0.35**	0.3
	24-hour	8.15	-	8.15	9.4

e) Cumulative HVAC Impact on Projected Development Site 4

Table 2.9-8 presents the AERMOD model predicted cumulative impacts from Projected Development Sites 1, 2, 3, and Potential Development Site 1 on Projected Development Site 4. As shown in the table,

the exceedance of $PM_{2.5}$ annual *de minimis* level was predicted on Projected Development Site 4 using No.2 fuel oil. Therefore, a further modeling analysis under the natural gas option is warranted.

Table 2.9-8 Maximum Modeled Concentration (µg/m^3) on Projected Site 4

Pollutant	Averaging Time	Maximum Modeled Concentration	Background Concentration	Total Concentration	NAAQS/ *de minimis*
NO_2	annual	1.3	30.2	31.5	100.0
	1-hour	138.3	-	138.3	188.0
SO_2	1-hour	0.9	18.2	19.1	196
PM_{10}	24-hour	8.19	48	56.2	150
$PM_{2.5}$	annual	0.38	-	**0.38**	0.3
	24-hour	8.19	-	8.19	9.1

f) Cumulative HVAC Impact on Potential Development Site 1

Table 2.9-9 presents the AERMOD model predicted cumulative impacts from Projected Development Sites 1, 2, 3, and 4 on Potential Development Site 1. As shown in the table, no significant cumulative adverse air quality impacts on Potential Development Site 1 would occur.

Table 2.9-9 Maximum Modeled Concentration (µg/m3) on Potential Site 1

Pollutant	Averaging Time	Maximum Modeled Concentration	Background Concentration	Total Concentration	NAAQS/ *de minimis*
NO_2	annual	1.1	30.2	31.3	100.0
	1-hour	131.1	-	131.1	188.0
SO_2	1-hour	0.5	18.2	18.7	196
PM_{10}	24-hour	3.24	48	51.2	150
$PM_{2.5}$	annual	0.20	-	0.20	0.3
	24-hour	3.24	-	3.24	9.1

g) Cumulative HVAC Impact on potential development at 1050 Pacific Street

Table 2.9-10 presents the AERMOD model predicted cumulative impacts from Projected Development Sites 1, 2, 3, 4, and Potential Development Site 1 on Potential Development at 1050 Pacific Street. As shown in the table, no significant cumulative adverse air quality impacts would occur.

Table 2.9-10 Maximum Modeled Concentration (µg/m^3) on Potential Development at 1050 Pacific Street

Pollutant	Averaging Time	Maximum Modeled Concentration	Background Concentration	Total Concentration	NAAQS/ *de minimis*
NO_2	annual	1.0	30.2	31.2	100.0
	1-hour	148.5	-	148.5	188.0
SO_2	1-hour	0.8	18.2	19.0	196
PM_{10}	24-hour	4.21	48	52.2	150
$PM_{2.5}$	annual	0.18	-	0.18	0.3
	24-hour	4.21	-	4.21	9.1

Since exceedances of $PM_{2.5}$ annual *de minimis* criterion were predicted under the No. 2 fuel oil option, further modeling analyses under the natural gas option are warranted. **Table 2.9-11** presents the HVAC emission rates firing natural gas and stack parameters used in the AERMOD.

By analyzing the contribution from each projected and potential site on Projected Sites 3 and 4, it was found that Potential Site has the largest impact. The mitigation plan of Potential Site firing natural gas, all other sites still firing No. 2 fuel oil was then modeled to assess the cumulative impact on Projected Sites 3 and 4.

Table 2.9-11 HVAC Emission Rates and Stack Parameters under Natural Gas Option for the Proposed Buildings

	Projected Site 1	Projected Site 2	Projected Site 3	Projected Site 4	Potential Site 1
Emission Rate (g/s)					
1-Hr NO_x	4.06E-02	4.32E-03	6.11E-03	5.12E-03	1.12E-02
Annual NO_x	1.11E-02	1.18E-03	1.67E-03	1.40E-03	3.07E-03
24-Hr PM_{10}	3.09E-03	3.28E-04	4.64E-04	3.89E-04	8.51E-04
24-Hr $PM_{2.5}$	3.09E-03	3.28E-04	4.64E-04	3.89E-04	8.51E-04
Annual $PM_{2.5}$	8.46E-04	8.99E-05	1.27E-04	1.07E-04	2.33E-04
1-Hr SO_2	2.44E-04	2.59E-05	3.67E-05	3.07E-05	6.72E-05
Stack Parameters					
Stack Height (feet)	98	98	98	98	98
Stack Diameter (feet)	1	1	1	1	1
Exhaust Temperature (K)	426	426	426	426	426
Exhaust Velocity (m/s)	5.24	0.56	0.79	0.66	1.45

Table 2.9-12 presents the AERMOD model predicted cumulative impacts from Projected Development Sites 1, 2, 4, and Potential Development Site 1 on Projected Development Site 3 by performing the mitigation plan. As shown in the table, no significant cumulative adverse air quality impacts on Projected Development Site 3 would occur, by the Potential Site using natural gas as the type of fuel.

Table 2.9-12 Mitigated Concentration (µg/m^3) on Projected Site 3

Pollutant	Averaging Time	Maximum Modeled Concentration	Background Concentration	Total Concentration	NAAQS/ *de minimis*
NO_2	annual	1.0	30.2	31.2	100.0
	1-hour	143.6	-	143.6	188.0
SO_2	1-hour	0.6	18.2	18.8	196
PM_{10}	24-hour	5.03	48	53.0	150
$PM_{2.5}$	annual	0.22	-	0.22	0.3
	24-hour	5.03	-	5.03	9.4

Table 2.9-13 presents the AERMOD model predicted cumulative impacts from Projected Development Sites 1, 2, 3, and Potential Development Site 1 on Projected Development Site 4 by applying the mitigation plan. As shown in the table, no significant cumulative adverse air quality impacts on Projected Development Site 4 would occur, by the Potential Site using natural gas as the type of fuel.

Table 2.9-13 Mitigated Concentration (µg/m^3) on Projected Site 4

Pollutant	Averaging Time	Maximum Modeled Concentration	Background Concentration	Total Concentration	NAAQS/ *de minimis*
NO_2	annual	1.1	30.2	31.3	100.0
	1-hour	136.2	-	136.2	188.0
SO_2	1-hour	0.7	18.2	18.9	196
PM_{10}	24-hour	5.04	48	53.0	150
$PM_{2.5}$	annual	0.26	-	0.26	0.3
	24-hour	5.04	-	5.04	9.1

Proposed (E) Designations

To ensure that there are no significant adverse impacts related to emissions from the HVAC systems associated with the With-Action development onto existing or other projected buildings of similar or greater height, certain restrictions would be required regarding fuel type and/or exhaust stack location for some of the development sites. The text of the (E) designation (E-503) would be as follows:

- Projected Site 1 (Block 1133, Lot 32 and 42) - Any new residential/commercial development on the above-referenced property must ensure HVAC stack(s) is located at the highest tier and at least 98 feet above grade, to avoid any significant adverse air quality impacts.

- Projected Site 2 (Block 1133, Lot 45) - Any new residential/commercial development on the above-referenced property must ensure HVAC stack(s) is located at the highest tier and at least 98 feet above grade, to avoid any significant adverse air quality impacts.

- Projected Site 3 (Block 1133, Lot 48 and 49) - Any new residential/commercial development on the above-referenced property must ensure HVAC stack(s) is located at the highest tier and at least 98 feet above grade, to avoid any significant adverse air quality impacts.

- Projected Site 4 (Block 1133, Lot 51 and 52) - Any new residential/commercial development on the above-referenced property must ensure HVAC stack(s) is located at the highest tier and at least 98 feet above grade, to avoid any significant adverse air quality impacts.

- Potential Site 1 (Block 1133, Lot 46, 47, and 53) - Any new residential/commercial development on the above-referenced property must use natural gas as the type of fuel for HVAC and hot watersystems, and ensure HVAC stack(s) is located at the highest tier and at least 98 feet above grade, to avoid any significant adverse air quality impacts.

Industrial Sources

In addition to evaluating the impact of the proposed rezoning on the study area or other potential receptors, a determination must be made whether the projected and potential development sites might be impacted by existing or planned emissions stacks from nearby adjacent industrial or manufacturing uses. Because the rezoning area is located in an area with a mix of industrial and residential uses directly adjacent to one another, an assessment of industrial uses in the vicinity of the subject properties was conducted. The MapPluto database was utilized to flag potential parcels within the 400-foot study area that may contain active industrial or manufacturing uses. **Table 2.9-10** identifies manufacturing or industrial uses within the study area, based on the MapPluto database.

A field search verified that none of these sites utilized an emissions stack visible from street level. A freedom of information law (FOIL) request was submitted to DEP to request any current air toxic permits related to properties within the study area. Based upon the absence of emissions stacks and the highly mixed-use character of the study area, it is not believed than any existing land uses pose a hazardous impact to the projected development site.

At the request of the Department of City Planning, the Lead Agency for the proposed action, three properties were further investigated to confirm the presence or absence of active industrial and manufacturing uses. The three properties, which are denoted with an asterisk in Table 2.9-10, include 1025 Atlantic Avenue (Block 2020, Lot 1), 868 Dean Street (Block 1141, Lot 18), and 837 Dean Street (Block 1141, Lot 59).

A search of DEP's CATS online permitting database found that four expired permits are associated with these three properties, as indicated in **Table 2.9-11**.

A field inspection was conducted to identify current uses of each property and to determine whether any of these properties still contain manufacturing or processing facilities. The results are summarized below.

- **1025 Atlantic Avenue (Block 2020, Lot 1) -** 1025 Atlantic Avenue is currently occupied by an auto repair/flat tire repair facility. During the field visit the property exhibited no visual evidence of an emissions stack, paint spray booth or other indicator of an air toxics issue.

- **868 Dean Street (Block 1141, Lot 18) -** 868 Dean Street is currently the site of a garage occupied by Monsey Tours, a charter bus operator. During the field visit the property exhibited no visual evidence of an emissions stack, paint spray booth or other indicator of an air toxics issue.

- **835 Bergen Street (Block 1141, Lot 59) –** 835 Bergen Street is currently the site of a single-story garage used for equipment and material storage. During the field visit the property exhibited no visual evidence of an emissions stack, paint spray booth or other indicator of an air toxics issue.

As no active industrial uses have been identified within the 400-foot study area, a detailed industrial source analysis is not warranted. Thus the proposed rezoning is not expected to result in significant adverse industrial source impacts.

Table 2.9-10 Industrial and Manufacturing Uses within the 400-Foot Study Area

Address	Owner Name	Block	Lot
1050 Atlantic Avenue	Cubesmart, L.P.	1125	40
1093 Pacific Street	Gmdc Atlantic Avenue	1126	75
998 Atlantic Avenue	Atlantic Pacific Hold	1125	10
1042 Atlantic Avenue	Gold Star A Realty	1125	33
892 Dean Street	Golden Seldan Realty	1141	28
624 Classon Avenue	Dean Classon, L.L.C.	1133	54
813 Bergen Street	Velvet Realty Corp	1141	69
1024 Pacific Street	Pacific Grand Realty	1133	45
904 Dean Street	Golden Seldan Realty	1141	33
622 Classon Avenue	Engberg Ian	1133	53
989 Pacific Street	Atlantic Pacific Hold	1125	80
971 Dean Street	Byg Realty Corp	1134	81
972 Dean Street	Jeffers, Oswald	1142	16
837 Bergen Street	Golden Year Realty Co	1141	59
831 Bergen Street	Golden Seldan Realty	1141	61
814 Bergen Street	P M M	1148	29
630 Classon Avenue	Dean Classon, L.L.C.	1133	57
537 Grand Avenue	Kerenor Properties Co	1133	3
998 Pacific Street	Lisa Martensson	1133	32
1034 Atlantic Avenue	Gold Star A Realty	1125	29

1026 Pacific Street	Engberg Ian	1133	46
964 Dean Street	964 Dean Acquisition	1142	12
893 Bergen Street	893 Bergen LLC	1142	82
987 Pacific Street	Atlantic Pacific Hold	1125	81
626 Classon Avenue	Dean Classon, L.L.C.	1133	55
1058 Pacific Street	Ten Fifty Eight LLC	1134	17
819 Bergen Street	825 Bergen LLC	1141	128
481 Grand Avenue	Cubesmart, L.P.	2019	1
1035 Atlantic Avenue	1035 Atlantic Ave. LLC	2020	86
1025 Atlantic Avenue*****	1025 Realty Corp.	2020	1
999 Atlantic Avenue	999 Atlantic Avenue LLC	2019	60
1041 Atlantic Avenue	Slaw Realty Co., Inc.	2020	77
868 Dean Street*****	585 Meserole Street Co.	1141	18
837 Dean Street*****	Golden Year Realty Co	1141	59

***** *These three properties were further investigated, as discussed below.*

Table 2.9-11 DEP CATS Database Search Results

Block	Lot	Address	Permit Type	Permit Status
2020	1	1025 Atlantic Avenue	Certificate to Operate - Industrial	Expired – 4/21/11
1141	18	868 Dean Street	Certificate to Operate - Industrial	Expired – 10/4/02
1141	59	835 Bergen Street	Certificate to Operate - Industrial	Expired – 10/6/01
			Boiler Registration	Expired – 7/9/00

Noise

Because the predominant noise sources in the Rezoning Area are vehicular traffic and aircraft noise, noise monitoring was conducted during peak vehicular travel periods, 8:00-10:00 am, 12:00-1:00 pm, and 5:00-6:00 pm for locations affected by vehicular traffic. The following analysis was included in the October 2018 EAS.

Noise measurements were conducted on February 2nd and 9th, 2016 at two locations in front of the proposed rezoning area. A Type 2 Larson Davis LxT sound meter with windshield was used to conduct the noise monitoring. The meter was placed on a tripod at a height of approximately five feet above the ground, away from any other surfaces. The meter was calibrated prior to and following each monitoring session.

Noise measurements were conducted on February 2nd and 9th, 2016 at two locations in front of the proposed rezoning area. A Type 2 Larson Davis LxT sound meter with windshield was used to conduct the noise monitoring. The meter was placed on a tripod at a height of approximately five feet above the ground, away from any other surfaces. The meter was calibrated prior to and following each monitoring session.

Noise measurements were conducted adjacent to the rezoning area on the sidewalk of Pacific Street at:

- Location 1: the intersection of Pacific Street and Classon Avenue
- Location 2: middle block of Pacific Street between Classon and Grand Avenues, in front of Projected Development Site 1 at 1010 Pacific Street.

Noise Measurement Location 1 was influenced by the vehicular traffic from Classon Avenue as well as Atlantic Avenue, especially during AM peak hour. When traffic levels are high, engines from heavy trucks generated a high level of noise when idling and starting. NYC Transit's elevated Franklin Avenue Shuttle (S Train) is located approximately 650 feet east of the intersection of Pacific Street and Classon Avenue. However, the train noise was barely audible during the measurement periods.

The maximum L_{10} measured at monitoring Location 1 was 69.8 dB(A) during the AM peak period. The maximum L_{10} measured at monitoring Location 2 was 69.2 during the off-peak period. Therefore, the noise levels at both of the noise measurement locations within the rezoning area fall within the "Marginally Acceptable" range. However, the existing L_{10} noise levels at the Location 1 are expected to increase to 70.0 db(A) by the 2023 build year due to No-Action background traffic growth. The existing L_{10} noise levels at Location 2, on Pacific Street, are not expected to increase to 70.0 db(A).

Thus, in accordance with DEP requirements, a 28 dB(A) window-wall noise attenuation would be required to achieve an acceptable interior noise level at the proposed residential uses located on Classon Avenue and also

at the proposed residential uses located on Pacific Avenue within 100 feet of Classon Avenue. This level of attenuation could be achieved with a closed-window situation and alternate means of ventilation, such as indoor air conditioning, heat pumps or split systems.

It is assumed that an (E) designation for noise would be placed on Projected Development Sites 3 and 4, and on the portions of Potential Development Site 1 that are either located along Classon Avenue (i.e., Lot 53) or are within 100 feet (i.e., Lot 47). No window-wall attenuation is recommended for Projected Development Site 1 (Lots 32 and 42), Projected Development Site 2 (Lot 45), or the Lot 46 portion of Potential Development Site 1. The text of the (E) designation would be as follows:

> ***In order to ensure an acceptable interior noise environment, future residential/commercial uses must provide a closed window condition with a minimum of 28 dBA window/wall attenuation in order to maintain an interior noise level of 45 dBA. In order to maintain a closed-window condition, an alternate means of ventilation must also be provided.***

With the implementation of this (E) designation, no significant adverse impacts related to noise would occur. Therefore, the proposed action would not result in significant adverse noise impacts, and further assessment is not warranted.

April 2019 EAS

These (E) designations would remain in place under the newly proposed R7A/C2-4 Zoning Map Amendment. With the implementation of these (E) designations, no significant adverse impacts related to noise would occur. Therefore, the proposed action would not result in significant adverse noise impacts, and further assessment is not warranted.

Neighborhood Character

As this EAS has established, of the relevant technical areas specified in the *CEQR Technical Manual* that comprise neighborhood character, the Proposed Actions would not cause significant adverse impacts with regard to any of them. Moderate adverse effects that would potentially impact such a defining feature, either singly or in combination, have also not been identified for more than one technical area. Therefore, as the proposed actions would not have a significant adverse neighborhood character impact and would not result in a significant adverse impact to a defining feature of the neighborhood, further analysis is not necessary.

Construction

The October 2018 EAS submission found that construction-related activities are not expected to have any significant adverse impacts on traffic, air quality, noise, historic resources, or hazardous materials

conditions as a result of the Proposed Actions. The April 2019 EAS looks at an RWCDS with a smaller increment than the October 2018 RWCDS. Under the potential CPC modification to the Proposed Actions, the Zoning Map Amendment would rezone Project Area from M1-1 to R7A/C2-4, which allows for less FAR and less height than the previously proposed R7D/C2-4 zoning district. Given the smaller development scenario, no significant adverse impacts with regards to construction are expected as a result of the Proposed Actions and no further analysis is required.

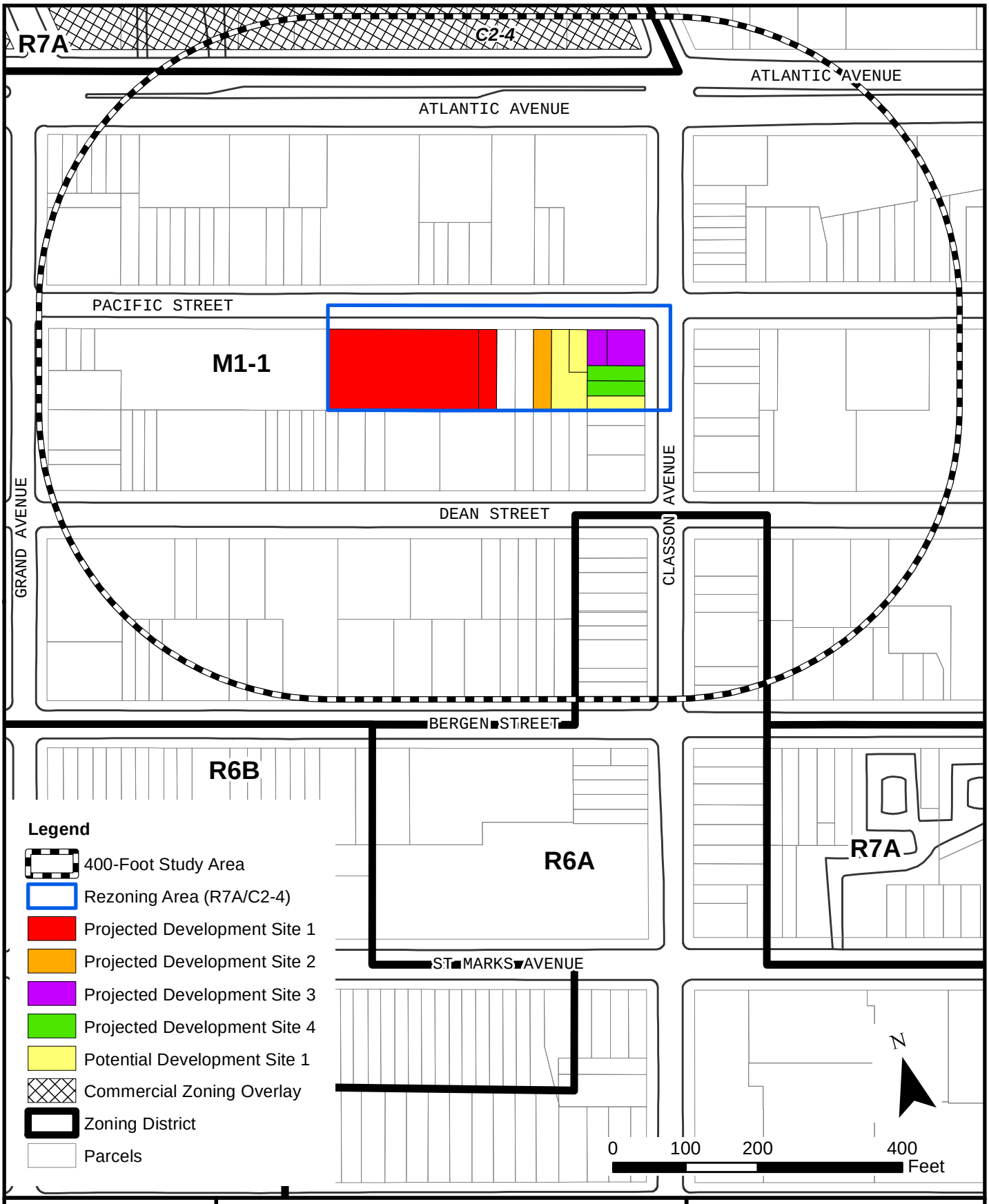

AECOM

Revised Environmental Assessment Statement
1010 Pacific Street Rezoning
Brooklyn, NY
March 2019

Zoning Map



AECOM

Revised Environmental Assessment Statement
1010 Pacific Street Rezoning
Brooklyn, NY
March 2019

Urban Design
Future No-Action Scenario:
Pacific Street, Eastern View



AECOM

Revised Environmental Assessment Statement
1010 Pacific Street Rezoning
Brooklyn, NY
March 2019

Urban Design
Future No-Action Scenario:
Pacific Street at Classon Avenue, Southern View



AECOM

Revised Environmental Assessment Statement
1010 Pacific Street Rezoning
Brooklyn, NY
March 2019

Urban Design
Future With-Action Scenario:
Pacific Street, Eastern View



AECOM

Revised Environmental Assessment Statement
1010 Pacific Street Rezoning
Brooklyn, NY
March 2019

Urban Design
Future With-Action Scenario:
Pacific Street at Classon Avenue, Southern View

About AECOM
AECOM (NYSE: ACM) is a global provider of professional technical and management support services to a broad range of markets, including transportation, facilities, environmental and energy. With approximately 95,000 employees around the world, AECOM is a leader in all of the key markets that it serves. AECOM provides a blend of global reach, local knowledge, innovation, and technical excellence in delivering solutions that enhance and sustain the world's built, natural, and social environments.

AECOM
125 Broad Street
New York, NY 10004
T 212.377.8400
F 212.377.8410
www.aecom.com